Cuisinart®

INSTRUCTION BOOKLET

Rechargeable Salt & Pepper Mill | SP-2

For your safety and continued enjoyment of this product, always read the instruction book carefully before using.

CONTENTS

Important Safeguards 2

Features and Benefits 3

Before You Begin 4

Assembly 4

Operation 5

Quick Tips 5

Charging & Battery Life 5

Cleaning and Maintenance 6

Disposal/Recycling of Batteries 6

Warranty 6

IMPORTANT SAFEGUARDS

When using an electrical appliance, basic safety precautions should always be followed, including the following:

1. **READ ALL INSTRUCTIONS.**
2. To protect against electrical shock, do not put the charger base or motor body of this appliance in water or other liquid. Never submerge any other portion of this unit. If any part falls into liquid, remove immediately. Carefully remove, clean and dry unit thoroughly before continuing.
3. Do not operate in the presence of explosive and/or flammable fumes.
4. Unplug charger base from outlet before cleaning.
5. Charger base should be plugged into an electrical outlet away from sink or hot surfaces.
6. Do not use an extension cord. Plug charger base adapter directly into an electrical outlet.
7. Do not use appliance for other than intended use.
8. **Do not operate any appliance with a damaged cord or plug, or after the appliance has malfunctioned or has been dropped or damaged in any way, or is not operating properly. Return the appliance to the nearest Cuisinart Repair Center for examination, repair, or mechanical or electrical adjustment.**
9. The use of attachments or accessories not recommended by Cuisinart may cause fire, electrical shock or risk of injury.
10. This appliance is intended for household use only and not for commercial or industrial use.
11. Do not operate a damaged charger. Have damaged charger replaced immediately.
12. **Do not incinerate the mills, even if they are severely damaged. The batteries can explode in a fire.**
13. This product contains, nickel-metal hydride (NiMH) batteries, which must be recycled at the end of the life of the Salt & Pepper Mills and disposed of properly. (See Disposal/Recycling of Batteries, page 5.) **Do not incinerate or compost batteries, as they will explode at high temperatures.**
14. Leaks from battery cells can occur under extreme conditions. If the liquid, which is a 20–35% solution of potassium hydroxide, gets on the skin, (1) wash quickly with soap and water or (2) neutralize with a mild acid such as lemon juice or vinegar. If the liquid gets into eyes, flush them immediately with clean water for a minimum of 10 minutes. Seek medical attention.
15. Close supervision is necessary when any appliance is used by or near children,
16. Avoid contacting moving parts.
17. Do not use outdoors.
18. Do not let cord hang over edge of table or counter.

SAVE THESE INSTRUCTIONS

FOR HOUSEHOLD USE ONLY

FEATURES AND BENEFITS

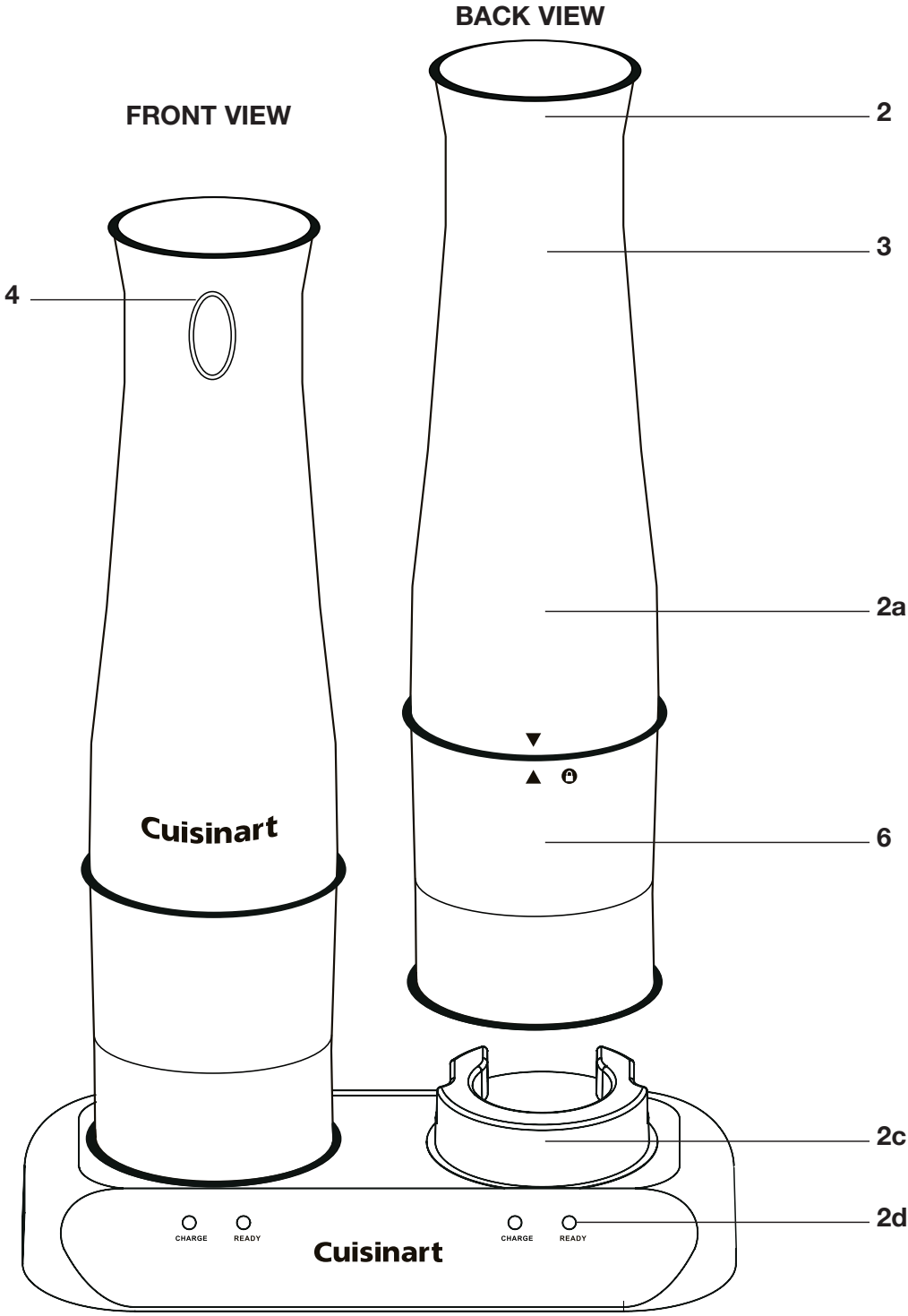

FEATURES AND BENEFITS

1. **Cordless Operation**

   No cord! Operates on rechargeable battery power.

2. **Easy to Recharge**

   a. Rechargeable batteries are located in the handles of the two mills.

   b. Charger base plugs into your standard outlet and connects to the back of the charger base.

   c. Charging/Storage Base Recharges mill batteries. Fully charged mills operate up to 20 minutes – a regular grinding operation is just 5 to 10 seconds.

   d. Charge and Ready lights let you know when mills are fully charged. Two green lights indicate both mills are fully charged. One green and one red indicates that both mills are partially charged but may still be used.

3. **Maximum Comfort Handle**

   The mill handle is designed to let you hold it in the same way you hold a stirring utensil. The shape offers comfortable control and easy access to the power button.

4. **One Step ON/OFF (Power) Button**

   Press and hold the ON/OFF button to operate the mill. Release button to stop motor. Use short pulses for best performance.

BOTTOM VIEW

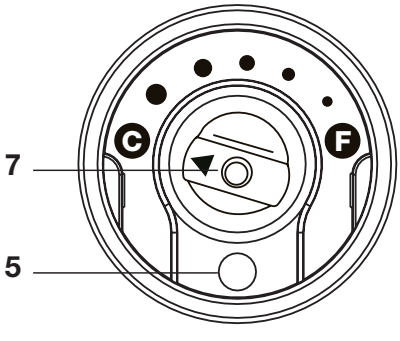

5. **Illuminated Grinding Feature**

   A light on the underside of each mill turns on when the ON button is depressed. This allows you to see just how much you are dispensing.

6. **Detachable Spice Holder (BPA-Free)**

   Easy to use, easy to refill and easy to store. Detach the spice holder from the upper housing by twisting clockwise. Fill with peppercorns, salt or spice. To attach, align arrows on upper housing and spice holder and twist counter clockwise until upper arrow is aligned with the lock icon.

7. **Adjustable Grind**

   A dial on the base of each mill adjusts grind from fine to coarse.

BEFORE YOU BEGIN

Place the package containing the Cuisinart® Cordless Rechargeable Salt & Pepper Mills on a sturdy surface and unpack all pieces.

Before using the mills for the first time, we recommend that you wipe the unit with a clean, damp cloth to remove any dirt or dust. Dry it thoroughly with a soft, absorbent cloth. Read all instructions completely for detailed operating procedures.

The batteries in your Cuisinart® Cordless Rechargeable Salt & Pepper Mills have not been charged. **Before the first use of this appliance, the batteries must be charged for 16 hours!** See Charging & Battery Life on page 5.

ASSEMBLY

1. To fill spice holder detach by twisting upper housing clockwise. Fill with peppercorns, salt or spice. To avoid corrosion after filling with salt, wipe around the top of clear spice holder, ensuring the two copper contacts are free of salt.
2. To attach, align arrows on upper housing and spice holder and twist counter clockwise until upper arrow is aligned with the lock icon.
3. Plug the charging adapter into the back of the charging base and then into an electrical outlet.
4. Place the mills on the base. The red charging light will come on to let you know charging is in progress.

5. When fully charged, the green light will come on.

NOTE: Fully charged mills operate for 20 minutes – a regular grinding operation is just 5 to 10 seconds.

OPERATION

Turning your Cuisinart® Rechargeable Salt & Pepper Mills on and off: Press and hold ON/OFF button on top of handle to turn motor ON. The unit will continue to run as long as the switch is pressed in. To turn Salt & Pepper Mills off, release ON/OFF button and the motor will stop. We recommend that you pulse the button for best results.

Your Cuisinart® Rechargeable Salt & Pepper Mills have a light on the underside of the mill that turns on when the ON button is depressed. This allows you to see just how much you are dispensing. When your light is no longer working, please contact our customer service center at 1-800-726-0190 to order a new lightbulb.

ADJUSTING THE GRIND

To perfect the grind from fine to coarse, use the adjustment dial on the underside of the mill. Clockwise for a finer grind and counterclockwise for a coarser grind.

QUICK TIPS

- Before first use, the batteries must be charged for 16 hours.
- To clear a peppercorn that is stuck in the grinding wheel you may either:
  1. Turn the mill upside down and shake gently while depressing the “On/Off” Power Button”.
  2. Turn the mill upside down and position the grind selector to coarse, then hold over a plate and grind until peppercorn is no longer stuck.
- Never use moist or wet spices in the mills. This will clog the grinding mechanism. We recommend using only store-bought dried spices.
- To improve battery performance, it is recommended that you occasionally unplug the charging base and use each mill until its battery is fully discharged and it stops operating. Once discharged, plug the charging base back into the electrical outlet and recharge the mills for 16 hours. This procedure improves battery capacity and should be repeated every 2-3 months.
- Clean the mills and base by simply wiping all parts with a damp cloth and thoroughly drying. Do not place in the dishwasher. Avoid wetting battery contacts.

CHARGING & BATTERY LIFE

Your Cuisinart® Cordless Rechargeable Salt & Pepper Mills are equipped with NiMH batteries. We have selected these batteries to give you maximum battery life and long running times.

If batteries should run down completely, it will take between 12 and 18 hours to fully recharge them. Normally, you won’t run batteries down completely, since the running time with a full charge is up to 20 minutes. It varies depending on your usage, but most grinding tasks take only about 5 seconds. If your battery is no longer charging, it is time to replace the battery. Please call our Consumer Service Center at 1-800-726-0190 to order a new battery.

CONTINUOUS CHARGING

The unit is designed so that the batteries may remain on continuous charge. It is recommended that the Cuisinart® Cordless Rechargeable Salt & Pepper Mills charger be kept plugged into a wall socket, so that the mills will always be ready to use. Leaving the unit on continuous charge is inexpensive in terms of the amount of electricity being used.

Use only with the charger provided with the appliance. Do not attempt to use this charger with any other product. Likewise, do not attempt to charge this appliance with any other charger.

HOLDING THE CHARGE

The batteries hold most of their charge even when not plugged in and charging, losing only about 30% of total charge per month.

SHORT RUN TIMES

If, after repeated use, the run time seems to get shorter and the Salt & Pepper Mills have less power, remove the plug from the wall outlet and continue to use mills until both are fully discharged and stop operating. Plug base back into wall outlet and recharge

the unit for 16 hours or overnight for a full new charge. This procedure improves battery capacity and should be repeated once every 2–3 months to ensure optimum performance.

CLEANING AND MAINTENANCE

Simply wipe all parts with a damp cloth then dry thoroughly. Do not place in the dishwasher. Avoid wetting battery contacts. Any other servicing should be preformed by an authorized service representative.

DISPOSAL/RECYCLING OF BATTERIES

This product uses four NiMH rechargeable and recyclable batteries. At the end of the batteries' useful life, they should be recycled. These batteries must not be incinerated or composted.

NiMH batteries should not be put in municipal waste systems. Contact your local waste collection agency for proper recycling and disposal information for your area.

Please do not attempt to dismantle the mill handle to replace these batteries on your own. Damage could result to the unit.

When it is time to replace and/or recycle the batteries, or to receive additional instructions for disposing of old batteries, call toll-free 1-800-726-0190 to order new mill handles, which will include four new batteries.
Or send the charger handle to: Cuisinart, 7811 North Glen Harbor Blvd., Glendale, AZ 85307.

WARRANTY

Limited Three-Year Warranty

This warranty is available to consumers only. You are a consumer if you own Cuisinart® Cordless Rechargeable Salt & Pepper Mills that were purchased at retail for personal, family or household use. Except as otherwise required under applicable law, this warranty is not available to retailers or other commercial purchasers or owners. We warrant that your Cuisinart® Cordless Rechargeable Salt & Pepper Mills will be free of defects in materials and workmanship under normal home use for 3 years from the date of original purchase.

We recommend that you visit our website, **www.cuisinart.com** for a fast, efficient way to complete your product registration. However, product registration does not eliminate the need for the consumer to maintain the original proof of purchase in order to obtain the warranty benefits. In the event that you do not have proof of purchase date, the purchase date for purposes of this warranty will be the date of manufacture.

If your Cuisinart® Cordless Rechargeable Salt & Pepper Mills should prove to be defective within the warranty period, we will repair them, or if we think necessary, replace them. To obtain warranty service, simply call our toll-free number 1-800-726-0190 for additional information from our Customer Service Representatives, or send the defective product to Customer Service at Cuisinart, 7811 North Glen Harbor Blvd., Glendale, AZ 85307.

To facilitate the speed and accuracy of your return, please enclose $10.00 for shipping and handling of the product.

Please pay by check or money order (California residents need only supply proof of purchase and should call 1-800-726-0190 for shipping instructions).

NOTE: For added protection and secure handling of any Cuisinart® product that is being returned, we recommend you use a traceable, insured delivery service. Cuisinart cannot be held responsible for in-transit damage or for packages that are not delivered to us. Lost and/or damaged products are not covered under warranty. Please be sure to include your return address, daytime phone number, description of the product defect, product model number (located on bottom of product), original date of purchase, and any other information pertinent to the product's return.

Your Cuisinart® Cordless Rechargeable Salt & Pepper Mills have been manufactured to the strictest specifications and have been designed for use with the authorized accessories and replacement parts. This warranty expressly excludes any defects or damages caused by accessories, replacement parts, or repair service other than those that have been authorized by Cuisinart. This warranty does not cover any damage caused by accident, misuse, shipment or other ordinary household use.

This warranty excludes all incidental or consequential damages. Some states do not allow the exclusion or limitation of these damages, so these exclusions may not apply to you.

CALIFORNIA RESIDENTS ONLY:

California law provides that for In-Warranty Service, California residents have the option of returning a nonconforming product (A) to the store where it was purchased or (B) to another retail store that sells Cuisinart® products of the same type. The retail store shall then, at its discretion, either repair the product, refer the consumer to an independent repair facility, replace the product, or refund the purchase price less the amount directly attributable to the consumer's prior usage of the product. If the above two options do not result in the appropriate relief to the consumer, the consumer may then take the product to an independent repair facility if service or repair can be economically accomplished. Cuisinart and not the consumer will be responsible for the reasonable cost of such service, repair, replacement, or refund for nonconforming products under warranty.

California residents may also, according to their preference, return nonconforming products directly to Cuisinart for repair, or if necessary, replacement, by calling our Consumer Service Center toll-free at 1-800-726-0190.

Cuisinart will be responsible for the cost of the repair, replacement, and shipping and handling for such products under warranty.

BEFORE RETURNING YOUR CUISINART® PRODUCT

If you are experiencing problems with your Cuisinart® product, we suggest that you call our Cuisinart® Service Center at 1-800-726-0190 before returning the product to be serviced. If servicing is needed, a Representative can confirm whether the product is under warranty and direct you to the nearest service location.

Important: If the nonconforming product is to be serviced by someone other than Cuisinart's Authorized Service Center, please remind the servicer to call our Consumer Service Center at 1-800-726-0190 to ensure that the problem is properly diagnosed, the product is serviced with the correct parts, and the product is still under warranty.

Cuisinart®

SAVOR THE GOOD LIFE®

Coffeemakers

Food Processors

Toasters

Rice Cookers

Cookware

Grills

Cuisinart offers an extensive assortment of top quality products to make life in the kitchen easier than ever. Try some of our other countertop appliances and cookware, and Savor the Good Life®.

www.cuisinart.com

©2010 Cuisinart
150 Milford Road
East Windsor, NJ 08520
Printed in China

10CE113651

IB-9426A

Any other trademarks or service marks referred to herein are the trademarks or service marks of their respective owners.