PC2120

All-in-One 12.1” TFT LCD Panel PC

User’s Manual

Disclaimers

Copyright 2004 by ACNODES
All rights reserved.
September 2004, Version A1
Printed in Taiwan

Safety Approvals

- CE Marking
- FCC Class A

FCC Compliance

- Reorient or relocate the receiving antenna.
- Increase the separation between the equipment and receiver.
- Connect the equipment into an outlet on a circuit different from that to which the receiver is connected.
- Consult the dealer or an experienced radio/TV technician for help.

Safety Precautions

1. The PC 2120 series does not come equipped with an operating system. An operating system must be loaded first before installing any software into the computer.
2. Be sure to ground yourself to prevent static charge when installing the internal components. Use a grounding wrist strap and place all electronic components in any static-shielded devices. Most electronic components are sensitive to static electrical charge.
3. Disconnect the power cord from the PC 2120 series before making any installation. Be sure both the system and the external devices are turned OFF. Sudden surge of power could ruin sensitive components. Make sure the PC 2120 series is properly grounded.
4. The brightness of the flat panel display decreases with usage. However, hours of use vary depending on the application environment.
5. Turn OFF the system power before cleaning. Clean the system using a cloth only. Do not spray any liquid cleaner directly onto the screen. The PC 2120 series may come with or w/o a touchscreen. Although the touchscreen is chemical resistant, it is recommended that you spray the liquid cleaner on a cloth first before wiping the screen. In case your system comes without the touchscreen, you must follow the same procedure and not spray any cleaner on the flat panel directly.
6. Avoid using sharp objects to operate the touchscreen. Scratches on the touchscreen may cause malfunction or internal failure to the touchscreen.
7. The flat panel display is not susceptible to shock or vibration. When assembling the PC 2120 series, make sure it is securely installed.

8. Do not open the system's back cover. If opening the cover for maintenance is a must, only a trained technician is allowed to do so. Integrated circuits on computer boards are sensitive to static electricity. To avoid damaging chips from electrostatic discharge, observe the following precautions:

   - Before handling a board or integrated circuit, touch an unpainted portion of the system unit chassis for a few seconds. This will help to discharge any static electricity on your body.
   - When handling boards and components, wear a wrist-grounding strap, available from most electronic component stores.

Trademarks Acknowledgments

Table of Contents

Chapter 1 Introduction.....1
1.1 General Description.....1
1.2 Specifications.....2
1.2.1 Core System for PC 2120 series system with SBC85610VE.....2
1.2.2 System I/O outlet.....2
1.2.3 Built-in Peripherals.....3
1.2.4 Net Weight.....3
1.2.5 12.1" TFT LCD Specification.....4
1.2.6 Environmental.....4
1.2.7 Dimension (main body size).....4
1.3 Utilities Supported.....4
1.4 Dimensions.....5
1.5 I/O Outlets.....6

Chapter 2 System Configuration.....9
2.1 Pedestal Versatility.....9
2.1.1 Desktop Standing.....10
2.1.2 Vertical Wall Mounting.....11
2.1.3 Wall Mounting.....12
2.1.4 30° Table Standing.....14

Chapter 3 Hardware Installation.....15
3.1 CPU.....16
3.2 DRAM.....16
3.3 HDD.....16
3.4 Three Serial Ports.....18
3.5 Parallel Port.....18
3.6 VGA.....19
3.7 Ethernet.....19
3.8 Cash Drawer (PC 2120-610e only).....20

3.9 Keyboard and Mouse.....20
3.10 Expansion Slot.....21
3.11 USB and Dallas Key Installation.....22
3.12 System O/S and Software Installation.....22

Appendix A Power Supply Specifications 23

Appendix B System Configuration Limitation Notice 25

This page does not contain any information.

Chapter 1
Introduction

- **General Description**
- **System Specification**
- **Utilities Supported**
- **Dimensions**
- **I/O Outlets**

1.1 General Description

PC 2120 series

°

1.2 Specifications

1.2.1 Core System for PC 2120 series system with SBC85610VE

„

- **CPU:**
  Socket370 for Intel Celeron/Pentium III and VIA C3 processor
- **System Chipset:**
  VIA VT8601T, VT82C686B with integrated real-time clock
- **BIOS:**
  Phoenix-Award BIOS, 4Mbit with RPL/PXE LAN Boot ROM
- **System Memory:**
  Two 168-pin DIMM Socket Maximum of 1GB SDRAM
- **Watchdog Timer:**
  Generates a system reset or NMI by jumper selectable; software programmable Time interval; 64 levels, 0.5~8 / 5~80 / 50~800 / 100~1600 seconds

1.2.2 System I/O outlet

- **Standard I/O:**

„

„

- „ 4 x USB ports
- „ 1 x LAN
- „ 1 x dallas key(option)
- „ 2 x RJ-11 cash drawer ports (610e only)

z **Cash Drawer Port:**
RJ-11 cash drawer x 2 (610e only)

z **Ethernet:**

- „ Realtek 8139C PCI Bus 10/100M Base-T
- „ Wake-On-LAN
- „ RJ-45 interface equipped

z **VGA/Flat Panel Controller:**

- „ VIA VT8601T chip with integrated Trident 2D/3D accelerator
- „ 2/4/8 MB frame buffer sharing system memory
- „ LCD/Simultaneous mode:
  1024x768 @ 16bpp (60Hz)
- „ CRT mode:
  1024x768 @ 16bpp (85Hz)

1.2.3 Built-in Peripherals

z **AT80W power supply(PW-080A-03Y)**
z **3.5" Hard disk drive bay**
z **3M 12.1" resistive 8-wire FG Touch Screen(R812.112) with RS-232(COM3)**
z **System cooling fan**
z **Dallas key(option)**

1.2.4 Net Weight

z **PC 2120 series: 4.2 Kgs**

1.2.5 12.1" TFT LCD Specification

- **Display area 245(H)x184(V)(12.1" diagonal)**
- **Resolution 1024×768 (XGA)**
- **Pixel pitch 0.240(H)x0.240(V)(TYP.)**
- **Contrast Ratio 200 (MIN.)**
- **Average Luminance 150cd/m²(TYP.)**
- **Viewing Angle θL(40)θR(40)ΦH(10)ΦL(30)**

1.2.6 Environmental

- **Operating Temperature Range: 0ºC ~ 40ºC**
- **Relative Humidity: 20% ~ 85%; non-condensing**
- **EMC: FCC**
- **Safety: CE**

1.2.7 Dimension (main body size)

- **PC 2120 series: 360 x 277 x 81.2 mm (WxHxD)**

NOTE1 *For more detailed information on the system engine board used in your PANEL PC, refer to the system board User's Manual that came with the system packaging.*

NOTE2

Appendix B System Configuration Limitation Notice.

1.3 Utilities Supported

- **Watchdog Utility**
- **Ethernet Utility**
- **VGA Drivers**
- **Touchscreen Utility(3M 8-wire)**

1.4 Dimensions

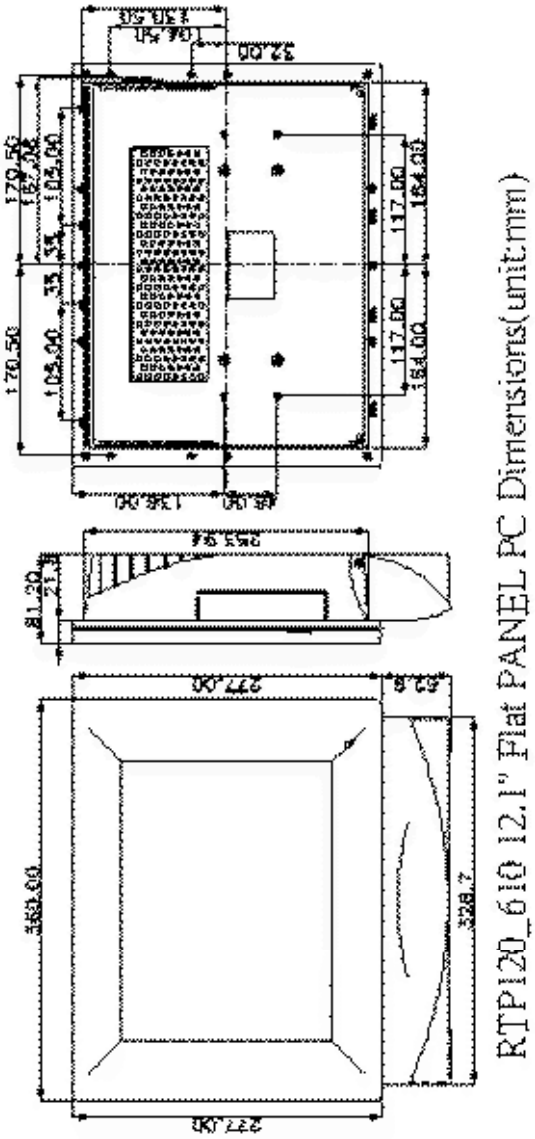

1.5 I/O Outlets

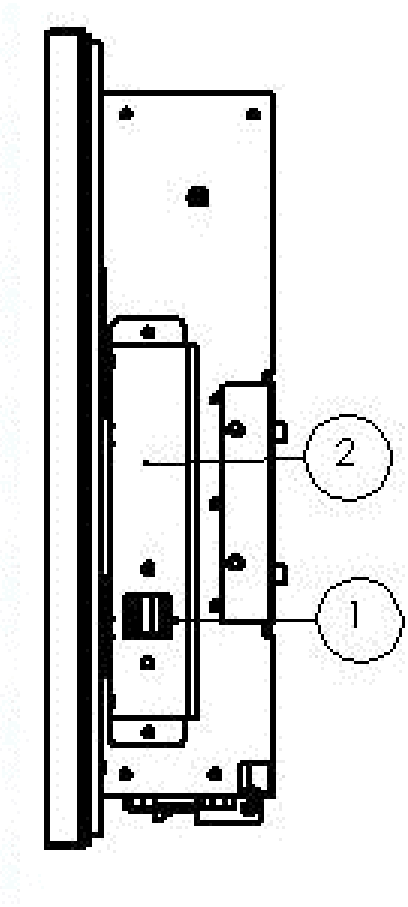

PC 2120-610/ 610e Side View

1 2XUSB ports **2 Dallas Key (option)**

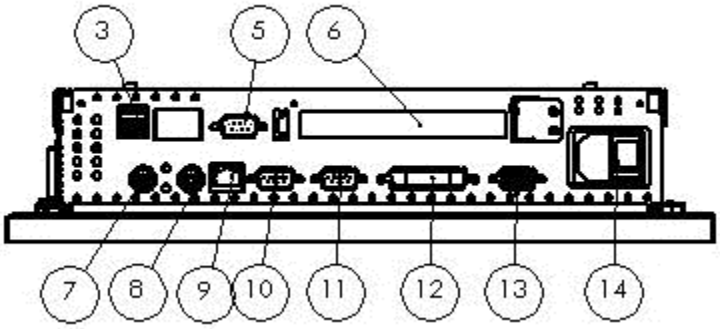

PC 2120-610 Bottom View

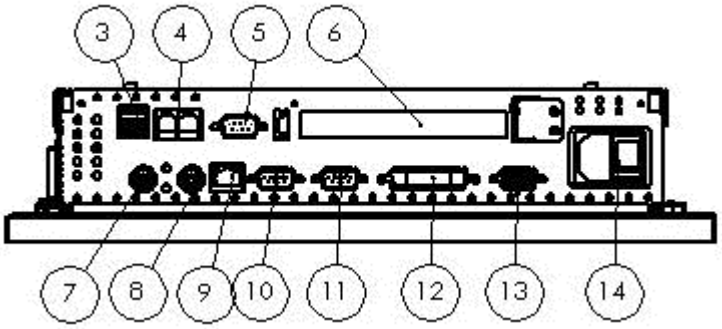

PC 2120-610e Bottom View

3	2x USB ports	9	LAN port
4	2x cash drawer ports (PC 2120-610e only)	10	COM1 port
5	COM4 port	11	COM2 port
6	PCI expansion slot outlet	12	printer port
7	mouse	13	VGA port
8	keyboard	14	power switch ON/OFF

This page does not contain any information.

Chapter 2
System Configuration

- **System Major Parts**
- **Pedestal Versatility**
- **System Key Components**

2.1 Pedestal Versatility

2.1.1 Desktop Standing

1 System main body
2 Cable management shroud
3 Pedestal
4 Small back metal fixtures
5 Main prop
6 Small hinge caps

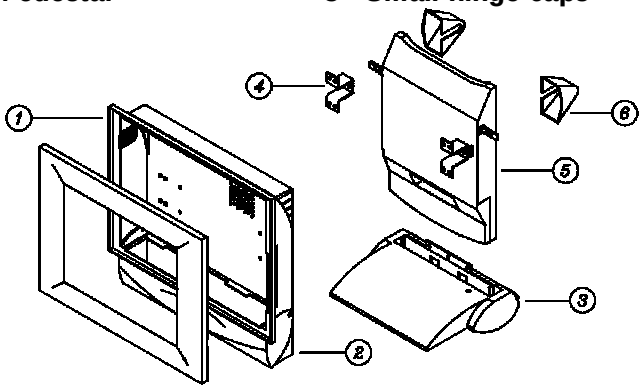

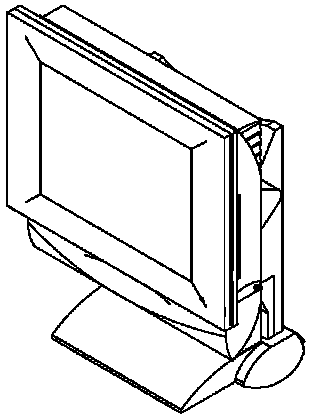

2.1.2 Vertical Wall Mounting

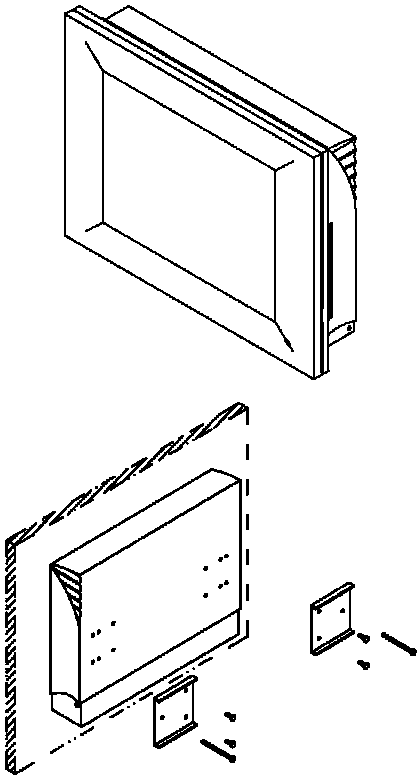

2.1.3 Wall Mounting

1. **System main body**
2. **Cable management shroud**
3. **Small back metal fixtures**
4. **Main prop**
5. **Rubber slip:**
   The rubber slip has to be inserted to the top opening of the main prop to make the whole unit look complete and integrated.
6. **Small hinge caps**
7. **Metal mounting kit**

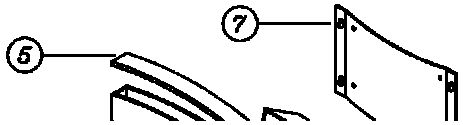

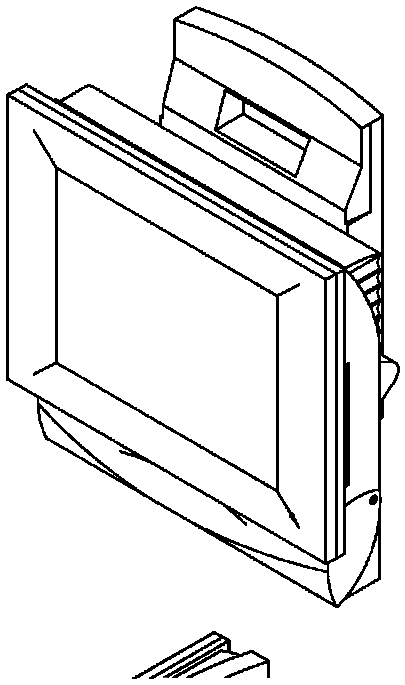

2.1.4 30° Table Standing

1. **System main body**
2. **Cable management shroud**
3. **Large back metal fixtures**
4. **Large hinge caps**
5. **Main prop**
6. **Rubber Slip:**
   When the system is to be assembled as a 30° table-standing unit, the rubber slip has to be inserted to the front opening of the laid-down main prop to make the whole unit look complete and integrated.

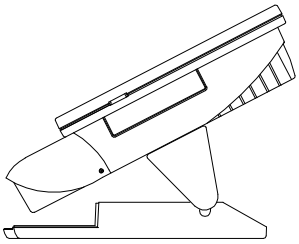

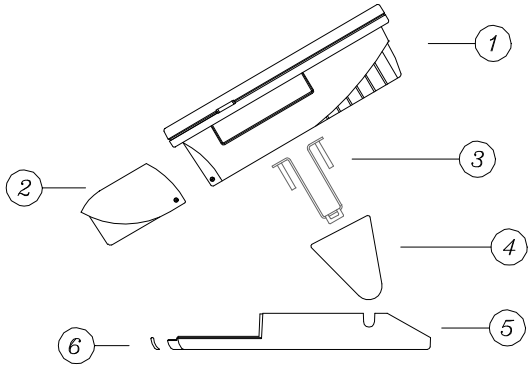

Chapter 3
Hardware Installation

- **CPU**
- **DRAM**
- **HDD**
- **3 x Serial Ports**
- **Parallel Port**
- **VGA**
- **Ethernet**
- **Keyboard**
- **PS/2 Mouse**
- **Cash Drawer(610e only)**
- **Dallas Key(option)**
- **Expansion Slot**
- **System O/S and Software Installation**

NOTE: *Make sure the power cord is disconnected before any installation. To install any internal device such as CPU, DRAM and HDD, take out the plastic rear cover and unscrew the metal rear bracket first.*

3.1 CPU

SBC85610VE

3.2 DRAM

2 x

168-pin DIMM

3.3 HDD

1. **Product Finished.**
2. **There are 19 screws that fasten the rear cover on to the main unit. Take out the screws and pull out the rear cover.**
3. **To remove the VEA bracket, loosen and take off the 5 screws (2 on each side) that bolts the bracket to the main unit.**
4. **loosen and take off the 3 screws (2 on each side) that bolts the**
5. **To remove the HDD bracket and Riser card.**
6. **Loosen and take off the 7 screws (2 and 3 on each side) that bolts the bracket to the main unit.**
7. **Repeat step2 to step6 for assembling.**

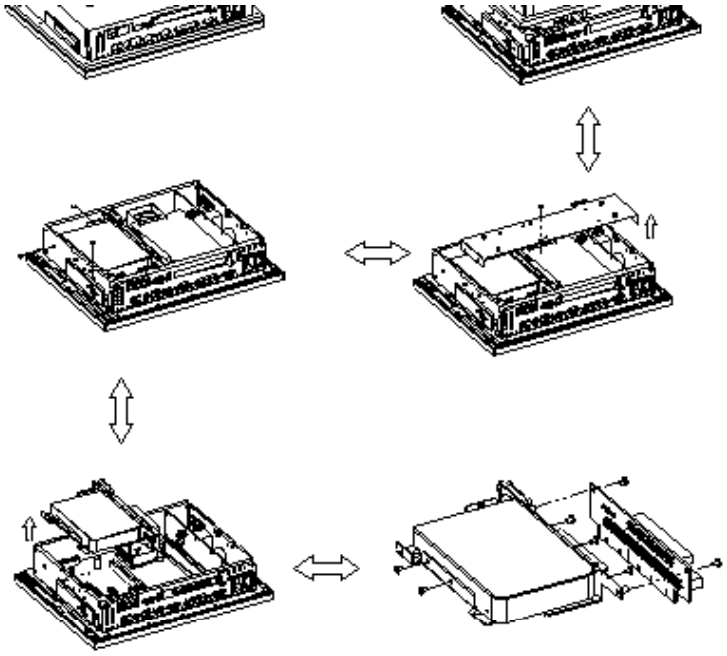

3.4 Three Serial Ports

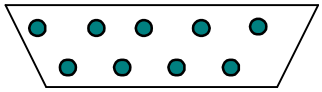

Pin #	Signal Name	
	R2-422	RS-485

3.5 Parallel Port

3.6 VGA

3.7 Ethernet

or

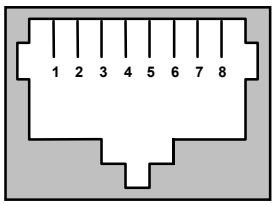

RJ-45

RJ-45 Connector Pin Assignment

Pin	Description

3.8 Cash Drawer (PC 2120-610e only)

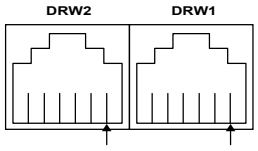

PC 2120-610e Cash Drawer Pin Assignment

Pin	DRW1	DRW2

3.9 Keyboard and Mouse

3.10 Expansion Slot

- **Unscrew the metal slip located inside the expansion outlet.**
- **Plug the riser card into the onboard PCI slot first.**
- **Screw the metal opening to the power supply bracket and the multi-I/O conversion metal piece.**
- **Plug a PCI card into the PCI slot on the riser card and screw the expansion card to the metal front compartment. All the connectors of the expansion card will come out from the opening on the rear cover for further cable connection.**
- **Screw the rear cover to the chassis.**

3.11 USB and Dallas Key Installation

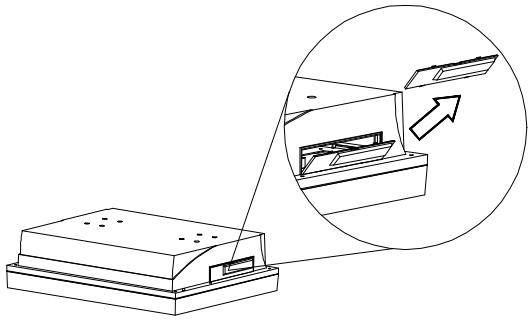

3.12 System O/S and Software Installation

- **Use an external USB flash memory:**
  Attach a USB flash memory to the USB port. Then, configure the system BIOS setup and containing necessary software and start the installation.
- **Use Ethernet:**
  If the Ethernet bootrom is already included in the system, the user can boot up the system via bootrom and download the system O/S or application software from the net.
- **Use external USB CD-ROM/ HDD:**
  Attach a USB CD-ROM or USB HDD to the USB port. Then, configure the system BIOS setup and containing necessary software and start the installation.

Appendix A
Power Supply Specifications

Introduction

Specifications

- AT 80W output
- Input voltage 90~132VAC (MIN.) 180~264VAC (MAX.)
- Over voltage, over load protection
- Continuous short circuit protection
- Conductive EMI meets FCC class B

Input Requirements

Description	MIN.	TYP.	MAX.	Condition

Output Characteristic

- **Static DC load, Ripple and Noise**

Nominal Voltage	Total Regulation	Output Current	Ripple & Noise

- **Hold-up time: 10ms at least.**
- **Over voltage protection: From +5.6VDC to 6.5VDC**
- **Short circuit protection: Continuous**

Environmental Specifications

- **Operating temperature range: 0˚C to 50˚C**
- **Storage temperature range: -10˚C to +70˚C**
- **Humidity, non-condensing: 10% ~ 90%**
- **MTBF:**
  80000hours min. at max. load for 25˚C ambient temperature

International Standards

EMI Standards(meet)

- **FCC Requirements**
  The power supply shall comply with the FCC"Class B" conducted
- **CE Requirements**
  The power supply shall confirm to meet the "Class B" requirements of EN55022

Appendix B

System Configuration Limitation Notice

Processor Limitation List

Processor	Power Consumption	Recommend

PC 2120-610 Configuration Limitation List

Parts	Power Consumption	Remark

PC 2120-610e Configuration Limitation List

Parts	Power Consumption limitation	Remark