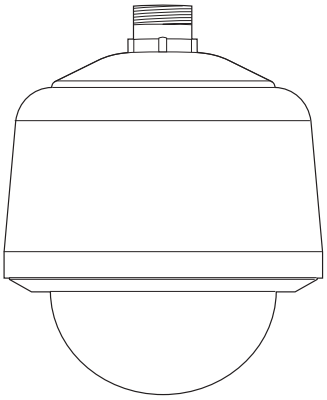

# SD5 Series Spectra® Dome

# Maintenance/ Service Manual

## C1455SM-C (5/00)

Pelco • 3500 Pelco Way • Clovis, CA 93612-5699 USA • www.pelco.com
In North America and Canada: Tel (800) 289-9100 • FAX (800) 289-9150
International Customers: Tel +1(559) 292-1981 • FAX +1(559) 348-1120

## DESCRIPTION

This maintenance/service manual consists of exploded assembly diagrams and parts lists. Use this manual when ordering replacement parts for Spectra® domes in the SD5 Series.

## BACK BOX ELECTRONIC ASSEMBLY REMOVAL

To remove the back box electronic assembly:

1. Turn off power.

2. Open the interconnect door and disconnect all wiring to the back box.

3. Use an 11/32 socket driver to remove the three 8-32 washers and nuts that hold the electronic assembly to the back box. When the screws are removed, the interconnect back box receptacle will drop down.

   It may be necessary to move the open interconnect door past 90° vertical toward the side of the back box to release the door from the built-in grounding strip (and free the interconnect back box receptacle).

4. Remove the interconnect back box receptacle with the electronic components from the back box.

## EXPLODED ASSEMBLY DIAGRAMS

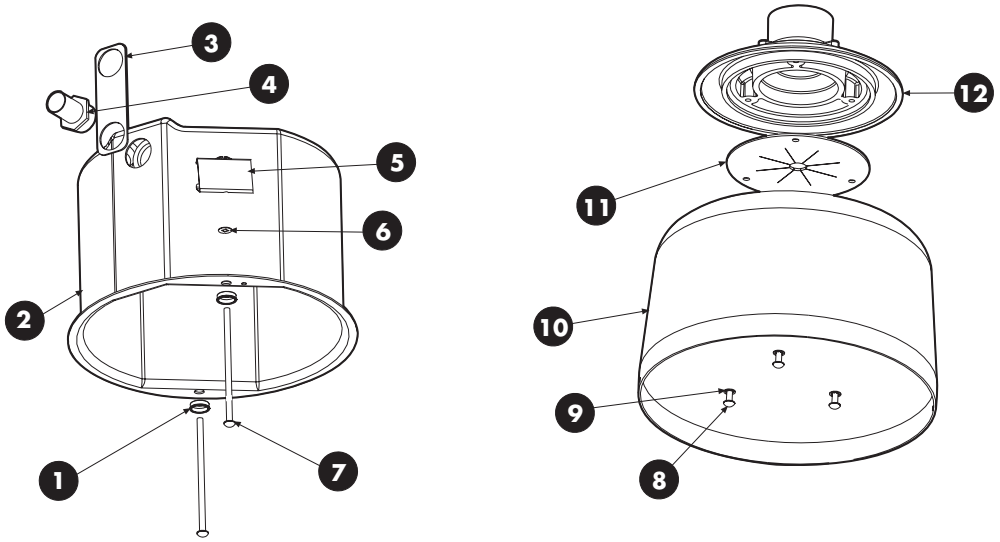


**Figure 1.** Exploded Assembly Diagram–Back Box, In-Ceiling and Pendant Models

**Table A.** Exploded Assembly Parts List–Back Box, In-Ceiling and Pendant Models

| Item | Qty | Description | Part Number |
|---|---|---|---|
| 1 | 2 | Trim ring snap cap | 70610036 |
| 2 | 1 | In-ceiling back box | 7064020COMP |
| 3 | 1 | Safety chain bracket | 7064014COMP |
| 4 | 1 | Conduit fitting | 70610040 |
| 5 | 2 | Spring clip | 70610027 |
| 6 | 3 | Push nut bolt retainer, #8 | ZH810000 |
| 7 | 2 | Screw, 8-32 x 3.50-inch, Phillips, pan head, | ZH8-32X3-50SPP |
| 8 | 3 | Screw, 8-32 x .375-inch, Phillips, pan head, (pendant only) | ZH8-32X.375SPP |
| 9 | 3 | Internal tooth lock washer, #8 (pendant only) | ZH8LWSIS |
| 10 | 1 | Pendant back box, black | 7064034BCOMP |
| | 1 | Pendant back box, gray | 7064034GCOMP |
| 11 | 1 | Gasket (pendant only) | 70610012 |
| 12 | 1 | Pendant top mount, black | 7064032BCOMP |
| | 1 | Pendant top mount, gray | 7064032GCOMP |
| NS | 1 | Sun shield, light gray (optional) | 7064033COMP |
| NS | 3 | Screw, 6-32 x 5/16-inch, pan head, Phillips, gray (sun shield only) | ZH6-32X.312GRAY |
| NS | 3 | Internal tooth lock washer, #6 (sun shield only) | ZH6LWSIS |

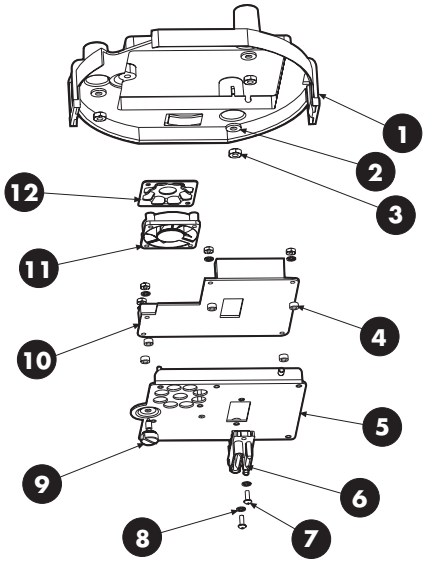


**Figure 2.** Exploded Assembly Diagram–Back Box Electronic Assembly

**Table B.** Exploded Assembly Parts List–Back Box Electronic Assembly

| Item | Qty | Description | Part Number |
|---|---|---|---|
| 1 | 1 | Spectra interconnect back box receptacle | 70610016 |
| 2 | 3 | Flat washer, #8 | ZH188X435X60C |
| 3 | 3 | Nut, 8-32 | ZH8-32NUTSH |
| 4 | 5 | Spacer, .25-inch O.D. x .187-inch | SPA9200 |
| 5 | 1 | Interconnect door | 7064039COMP |
| 6 | 1 | 22-position connector | CN12-3311-1022 |
| 7 | 2 | Screw, 4-40 x .3125-inch, Phillips, pan head | ZH4-40X.312SPP |
| 8 | 10 | Internal tooth lock washer, #4 | ZH4LWSIS |
| 9 | 1 | Thumbscrew, 8-32 x .5625-inch | ZH8-32THUMSCW |
| 10 | 1 | Spectra Lite™ interconnect circuit board | PA05-0007-01D0 |
| | | Spectra II™ interconnect circuit board | PA05-0007-00D0 |
| 11 | 1 | Fan assembly, 12 VDC | 7061007 |
| 12 | 1 | Fan finger guard | 7064002COMP |

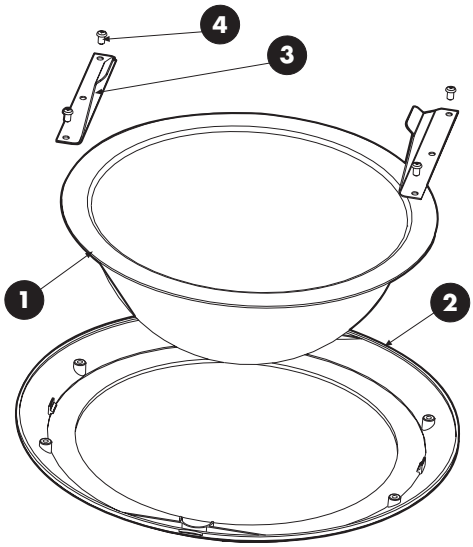


**Figure 3.** Exploded Assembly Diagram–Lower Dome, In-Ceiling Models

**Table C.** Exploded Assembly Parts List–Lower Dome, In-Ceiling Models

| Item | Qty | Description | Part Number |
|---|---|---|---|
| 1 | 1 | Acrylic dome (smoked) | 70610005-12 |
| | 1 | Acrylic dome (clear) | 70610005-05 |
| | 1 | Acrylic dome (chrome) | 70610005-02 |
| | 1 | Acrylic dome (gold) | 70610005-03 |
| 2 | 1 | Trim ring | 70610030 |
| 3 | 2 | Safety stop and latch | 7064019COMP |
| 4 | 4 | Screw, M3 x 5, Torx | ZHM3X5BPT |
| NS | 1 | Trim ring leash assembly | 70610017 |

NS = Not Shown

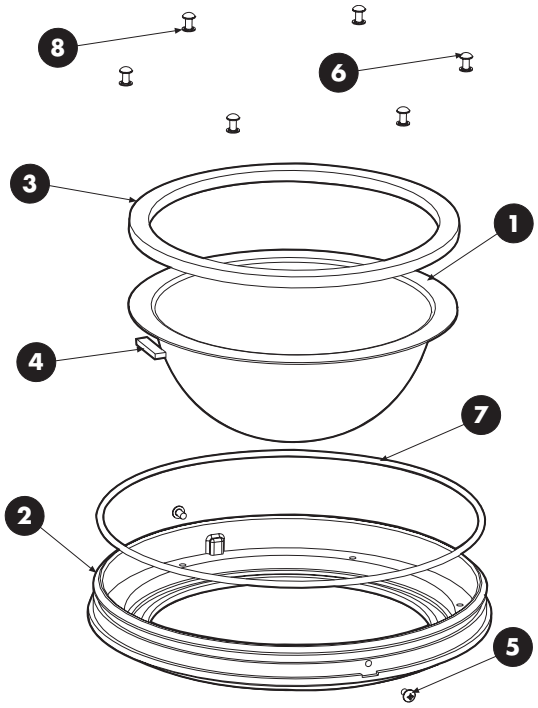


**Figure 4.** Exploded Assembly Diagram–Lower Dome, Pendant Models

**Table D.** Exploded Assembly Parts List–Lower Dome, Pendant Models

| Item | Qty | Description | Part Number |
|---|---|---|---|
| 1 | 1 | Acrylic dome (smoked) | 70610005-12 |
| | 1 | Acrylic dome (clear) | 70610005-05 |
| | 1 | Acrylic dome (chrome) | 70610005-02 |
| | 1 | Acrylic dome (gold) | 70610005-03 |
| 2 | 1 | Trim ring (black) | 7064085BCOMP |
| | 1 | Trim ring (gray) | 7064085GCOMP |
| 3 | 1 | Lower dome retainer | 70610019 |
| 4 | 2 | Gasket | GS01-0002-0430 |
| 5 | 2 | Screw, 6-32 x 1/4", pan head, Phillips, black | ZH6-32X.250BPP |
| | 2 | Screw, 6-32 x 5/16", pan head, Phillips, gray | ZH6-32X.312GRAY |
| 6 | 6 | Screw, 6-32 x 1/4", pan head, Phillips | ZH6-32X.250SPP |
| 7 | 1 | O-ring | ZH69-EP8X.139 |
| 8 | 6 | Internal tooth lock washer, #6 | ZH6LWSIS |

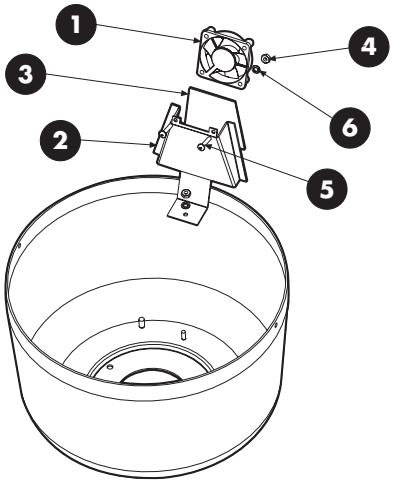


**Figure 5.**
Exploded Assembly Diagram–
Heater Segment in Back Box

**Table E.**
Exploded Assembly Parts List–
Heater Segment in Back Box

| Item | Qty | Description | Part Number |
|---|---|---|---|
| 1 | 2 | Fan, 1 W, 12 VDC | 7061007 |
| 2 | 2 | Fan shroud and heater bracket | 7064035COMP |
| 3 | 2 | Heater pad, 15 W, 24 VAC | HT01-0321-0202 |
| 4 | 6 | Nut, 4-40 | ZH4-40NUTSH |
| 5 | 4 | Screw, 4-40 x 5/8", pan head, Phillips | ZH4-40X.625SPP |
| 6 | 6 | Internal tooth lock washer, #4 | ZH4LWSIS |
| NS | 1 | Fan rectifier circuit board | PCB9000277ASSY |
| NS | 1 | Thermostat On at 70°F (21°C) Off at 85°F (29°C) | TH01-8570-0100 |
| NS | 1 | Fan finger guard | 7064002COMP |

NS = Not shown

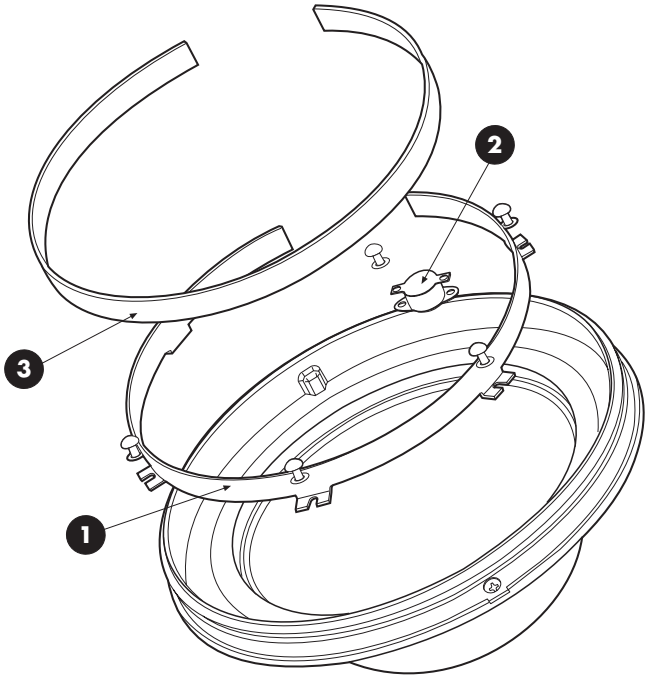


**Figure 6.** Exploded Assembly Diagram–Heater Segment in Lower Dome

**Table F.** Exploded Assembly Parts List–Heater Segment in Lower Dome

| Item | Quantity | Description | Part Number |
|---|---|---|---|
| 1 | 1 | Heater bracket | 7064041COMP |
| 2 | 1 | Thermostat On at 40°F (4°C) Off at 60°F (16°C) | EH5510049A |
| 3 | 1 | Heater pad, 30 W, 24 VAC | HT01-0621-20.5 |

## PRODUCT WARRANTY AND RETURN INFORMATION

**WARRANTY**

Pelco will repair or replace, without charge, any merchandise proved defective in material or workmanship **for a period of one year** after the date of shipment.

Exceptions to this warranty are as noted below:

- Five years on FT/FR8000 Series fiber optic products.
- Three years on Genex® Series products (multiplexers, server, and keyboard).
- Three years on Camclosure® and fixed camera models, except the CC3701H-2, CC3701H-2X, CC3751H-2, CC3651H-2X, MC3651H-2, and MC3651H-2X camera models, which have a five-year warranty.
- Two years on standard motorized or fixed focal length lenses.
- Two years on Legacy®, CM6700/CM6800/CM9700 Series matrix, and DF5/DF8 Series fixed dome products.
- Two years on Spectra®, Esprit®, ExSite™, and PS20 scanners, including when used in continuous motion applications.
- Two years on Esprit® and WW5700 Series window wiper (excluding wiper blades).
- Eighteen months on DX Series digital video recorders, NVR300 Series network video recorders, and Endura™ Series distributed network-based video products.
- One year (except video heads) on video cassette recorders (VCRs). Video heads will be covered for a period of six months.
- Six months on all pan and tilts, scanners or preset lenses used in continuous motion applications (that is, preset scan, tour and auto scan modes).

Pelco will warrant all replacement parts and repairs for 90 days from the date of Pelco shipment. All goods requiring warranty repair shall be sent freight prepaid to Pelco, Clovis, California. Repairs made necessary by reason of misuse, alteration, normal wear, or accident are not covered under this warranty.

Pelco assumes no risk and shall be subject to no liability for damages or loss resulting from the specific use or application made of the Products. Pelco's liability for any claim, whether based on breach of contract, negligence, infringement of any rights of any party or product liability, relating to the Products shall not exceed the price paid by the Dealer to Pelco for such Products. In no event will Pelco be liable for any special, incidental or consequential damages (including loss of use, loss of profit and claims of third parties) however caused, whether by the negligence of Pelco or otherwise.

The above warranty provides the Dealer with specific legal rights. The Dealer may also have additional rights, which are subject to variation from state to state.

If a warranty repair is required, the Dealer must contact Pelco at (800) 289-9100 or (559) 292-1981 to obtain a Repair Authorization number (RA), and provide the following information:

1. Model and serial number
2. Date of shipment, P.O. number, Sales Order number, or Pelco invoice number
3. Details of the defect or problem

If there is a dispute regarding the warranty of a product which does not fall under the warranty conditions stated above, please include a written explanation with the product when returned.

Method of return shipment shall be the same or equal to the method by which the item was received by Pelco.

**RETURNS**

In order to expedite parts returned to the factory for repair or credit, please call the factory at (800) 289-9100 or (559) 292-1981 to obtain an authorization number (CA number if returned for credit, and RA number if returned for repair).

All merchandise returned for credit may be subject to a 20% restocking and refurbishing charge.

Goods returned for repair or credit should be clearly identified with the assigned CA or RA number and freight should be prepaid. Ship to the appropriate address below.

*If you are located within the continental U.S., Alaska, Hawaii or Puerto Rico, send goods to:*

Service Department
Pelco
3500 Pelco Way
Clovis, CA 93612-5699

*If you are located outside the continental U.S., Alaska, Hawaii or Puerto Rico and are instructed to return goods to the USA, you may do one of the following:*

If the goods are to be sent by a COURIER SERVICE, send the goods to:

Pelco
3500 Pelco Way
Clovis, CA 93612-5699 USA

If the goods are to be sent by a FREIGHT FORWARDER, send the goods to:

Pelco c/o Expeditors
473 Eccles Avenue
South San Francisco, CA 94080 USA
Phone: 650-737-1700
Fax: 650-737-0933

## REVISION HISTORY

| Manual # | Date | Comments |
|---|---|---|
| C1455SM | 5/98 | Original version. |
| | 6/98 | Revised drawings to show new pendant top mount. Revised parts lists to show new pendant top mount and new pendant lower dome retainer. |
| C1455SM-A | 10/98 | Changed the title of the manual. Added Class B regulatory notice. Revised Section 2.0, Description, to include information on the Spectra (Version 3.0), Spectra II and Spectra Lite. Revised Section 2.1.1, SD5 Series In-Ceiling Components; Section 2.1.2, SD5 Series Pendant Components. Removed Section 2.2, Certifications. Revised Section 3.0, Troubleshooting. Revised Tables A and B in Section 5.0, Exploded Assembly Diagrams, to include new part numbers for back box interconnect doors. Added two figures to Section 6.0, Circuit Board Components and Wiring. |
| C1455SM-B | 2/99 | Revised Spectra Lite model numbers. |
| | 3/99 | Revised Tables A and B to add gasket/spacer. Removed FCC Class B notice. |
| | 6/99 | Added Spectra Lite™ PAL camera model. Revised Figure 2 and Table A to reflect removal of the connector rings on the back box for in-ceiling Spectra models. |
| | 8/99 | Added DD5TAC and DD5TAC-X Spectra Lite models. Changed to new format. |
| | 10/99 | Added DD5BC and DD5BC-X as the standard Spectra II dome drives. Added optional DD5BC22 and DD5BC22-X Spectra II dome drives. |
| C1455SM-C | 5/00 | Revised to new service manual layout. Removed the following sections: Models, Troubleshooting, Maintenance, and Circuit Board Components and Wiring. Revised illustrations and parts lists. |

Pelco, the Pelco logo, Spectra, Genex, Legacy, and PelcoVision are registered trademarks of Pelco.
Spevtra II, Spectra Lite, Esprit and Camclosure are trademarks of Pelco.

© Copyright 2000, Pelco.
All rights reserved.