BICYCLE/FRAME INSTRUCTION GUIDE
TARMAC/ROUBAIX/RUBY - COMP/ELITE

THIS BRIEF INSTALLATION GUIDE CONTAINS IMPORTANT INFORMATION. PLEASE READ CAREFULLY AND STORE IN A SAFE PLACE.

Congratulations! The Specialized bicycle you have chosen is among the finest of advanced composite products available in cycling. Carbon fiber is a very special material that requires particular care during assembly, storage and riding. This short form installation guide contains instructions and warnings, plus torque specifications.

Please read the following instructions. If you have any doubt regarding your mechanical ability and/or installation of this product, visit your local authorized dealer. Specialized recommends that components be installed on the frame using a torque wrench, by a qualified mechanic.

Please read the following Warnings. Because the failure to follow any Warning may result in a catastrophic failure of the frame, resulting in serious personal injury or death, this phrase may not be repeated in connection with each Warning.

To ensure the best assembly possible and to prevent any damage to the components or frame, follow all torque specifications. Please refer to the specific owner's manual for mating component's correct torque specifications. If the mating component's recommended torque exceeds the frame's recommended torque, use the lower torque spec. Due to torque considerations, not all components will be compatible.

WARNING! Failure to follow the torque specifications in this installation guide will void the warranty, but most importantly may result in damage to the frame which may not be visible. If the frame is damaged, this can result in loss of structural integrity, which may result in serious personal injury or death.

Bicycle components such as a handlebar, handlebar stem, seat post, saddle, brakes, all must be compatible with each other, the frame and the intended use. Any doubt regarding compatibility should be discussed with your local authorized Specialized retailer.

WARNING! When placing the frame and/or bicycle in a repair stand, clamp the stand to the seat post and not the frame. Clamping the frame can cause damage to the frame that may or may not be visible.

SEAT POST / SADDLE INSTALLATION

Refer to your seat post installation guide prior to installation. Specialized road frames have a **27.2mm** seat post diameter and require that the seat post have a tolerance of 27.08mm to 27.25mm.
The Tarmac, Roubaix and Ruby Elite/Comp frames use a seat post collar specifically designed for these frames. Use of a different collar can cause damage to the frame or seatpost, resulting in failure **(see fig.1 for proper setup).**

Tighten seat collar bolt to recommended torque of 55 in-lbf (6.2 N-m).

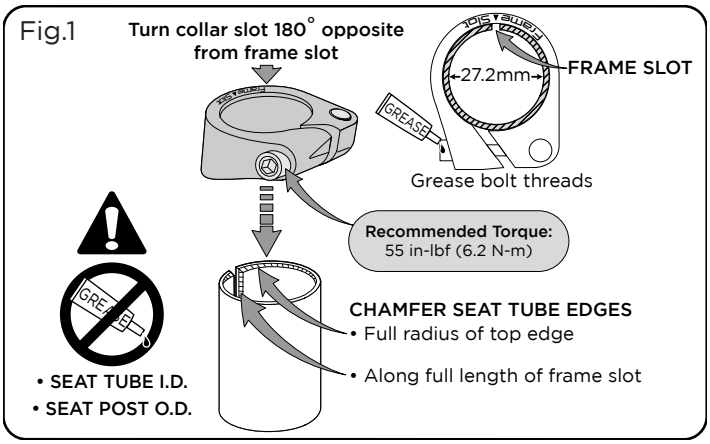

WARNING! Do not grease the seat tube surface that contacts the seat post. Grease reduces the friction that is critical to proper seat post grip. Remove any grease from the surfaces of the seat tube and seat post.

TECH TIP: Specialized recommends the application of carbon assembly compound between the seat tube and post to increase friction. Recommended compounds can be found at www.tacx.com. See your authorized Specialized retailer if you have any questions.

The seat post is marked with a minimum insertion line, which is the minimum insertion required for the seat post to remain structurally safe.

WARNING! Do not extend seat post above the minimum insertion line. Extension beyond the minimum insertion line can result in failure.

HEADSET

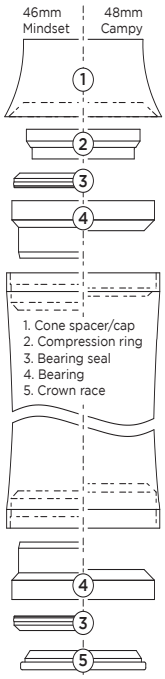

Your Specialized frame does not require any head tube pre-installation preparation. All surfaces are already prepared from the factory, with the exception of greasing the cups.

TARMAC: Use 42mm Campagnolo Standard compatible bearings. **No tools are required for installation / removal of 42mm Campagnolo Standard MindSet bearings.**

ROUBAIX/RUBY: Use only Specialized 4mm MindSet bearing/cups. The bearing and cup are an integrated assembly specifically designed to fit Specialized frames using the MindSet Integrated Headset.

INSTALLATION: Grease cups! Press the bearings in using the Specialized Integrated Headset Press Tool (9895-3045). This tool is compatible with the Park Headset Press and applies even pressure to the outer surface of the bearing to prevent damage.

REMOVAL: Use a standard headset cup removal tool. Make sure the tool is evenly engaging the cup of the bearing before removal, and not against the head tube bearing inserts that are bonded into the frame.

BOTTOM BRACKET

Your Specialized frame does not require any bottom bracket pre-installation preparation. All surfaces are already prepared from the factory, with the exception of greasing the threads. It is acceptable to chase the threads if applicable and necessary. Do not face bottom bracket cups.

Ensure that the bottom bracket shell threads are clean and greased prior to installation.
Recommended torque is 442 in-lbf (50 N-m).

COMPONENT TORQUE SETTINGS

- **Front derailleur: Recommended torque is 44 in-lbf (5.0 N-m).**
- **Rear derailleur: Recommended torque for the rear derailleur is 70 in-lbf (7.9 N-m). Ensure that threads are clean prior to installation.**
- **Seat collar: Recommended torque is 55 in-lbf (6.2 N-m).**
- **Water Bottle Cage: Recommended torque is 35 in-lbf (4.0 N-m). To avoid damage to the bottle cage frame rivets, ensure that the cage doesn't flex around the front derailleur clamp. If the cage doesn't clear the clamp, use longer bolts and spacers to help the cage clear the derailleur clamp.**

WARNING! Great care should be taken not to damage composite materials, including the frame and any composite components. Any damage may result in a loss of structural integrity, which may result in a catastrophic failure. This damage may not be visible in inspection. Before each ride, and after any crash, carefully inspect the bicycle for and dents, fraying, gouging, scratches through the paint, chipping, bending or any other signs of damage. Do not ride if the bicycle shows any signs of these signs. After any crash, and before riding any further, take the bicycle to an authorized Specialized retailer for a complete inspection.

WARRANTY

For the complete warranty provisions and any additional information, please refer to the Specialized Owner's Manual or www.specialized.com.

SPECIALIZED BICYCLE COMPONENTS
15130 Concord Circle, Morgan Hill, CA 95037 (408) 779-6229

Please note all instructions are subject to change for improvement without notice.
Rev.1, May 2007