GFB 80 x 80 x 50.8 MM SERIES

* Bearing Type
  Ball Bearings
* Material
  Impeller & Frame : Plastic(UL 94V-0)
* Lead Wires :
  UL 1061 AWG #24 OR Equivalent
  Red Wire Positive(+)
  Black Wire Negative(-)
* Weight : 165g (5.82 OZ)

■ DIMENSIONS DRAWING

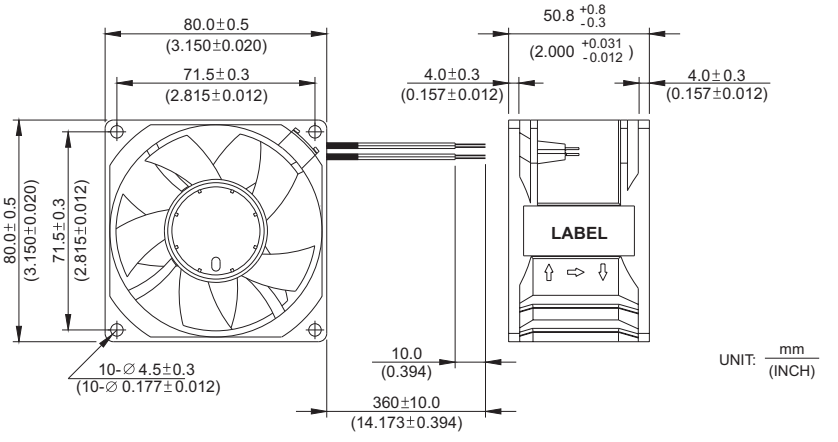

■ P & Q CURVE (AT RATED VOLTAGE)

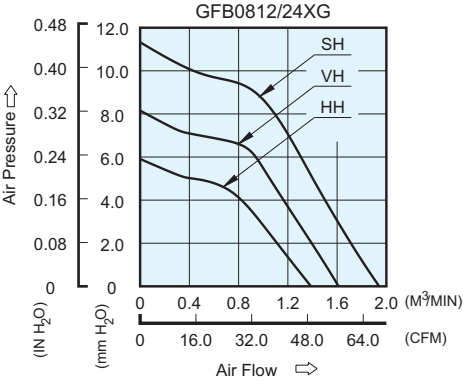

■ MOUNTING PANEL CUTOUT

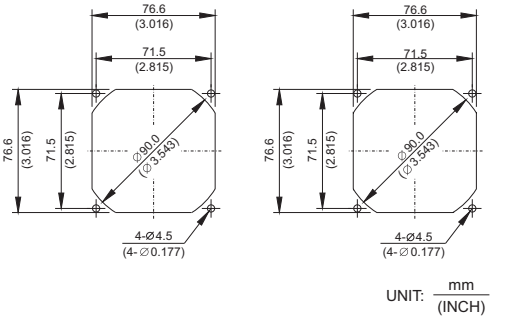

MODEL		Rated Voltage	Operating Voltage Range	Input Current	Input Power	Speed (Front /Rear)	Maximum Air Flow		Maximum Air Pressure		Noise
PART NO.	FUNCTION	VDC	VDC	Amp	Watt	R.P.M.	m^3 /min	CFM	mmH_2O	IN H_2O	dB-A
GFB0812HHG	-R00 / -F00	12	7.0 to 13.2	0.31	3.72	3100/2900	1.388	49.02	5.91	0.233	43.0
GFB0824HHG	-R00 / -F00	24	14.0 to 27.6	0.18	4.32						
GFB0812VHG	-R00 / -F00	12	7.0 to 13.2	0.47	5.64	3600/3260	1.612	56.93	8.15	0.321	47.5
GFB0824VHG	-R00 / -F00	24	14.0 to 27.6	0.24	5.76						
GFB0812SHG	-R00 / -F00	12	7.0 to 13.2	0.73	8.76	4200/3750	1.942	68.58	11.32	0.445	53.0
GFB0824SHG	-R00 / -F00	24	14.0 to 27.6	0.37	8.88						

* Function type is optional.
* The max. air flow and the speed are measured in free air ; max. air pressure is measured at zero air flow.
* Noise is measured in anechoic chamber in free air, one meter from intake side.
* All readings are typical values at rated voltage.
* Specifications are subject to change without notice.