OPERATOR'S MANUAL

14.4 VOLT 1/4 in. IMPACT DRIVER

R82320

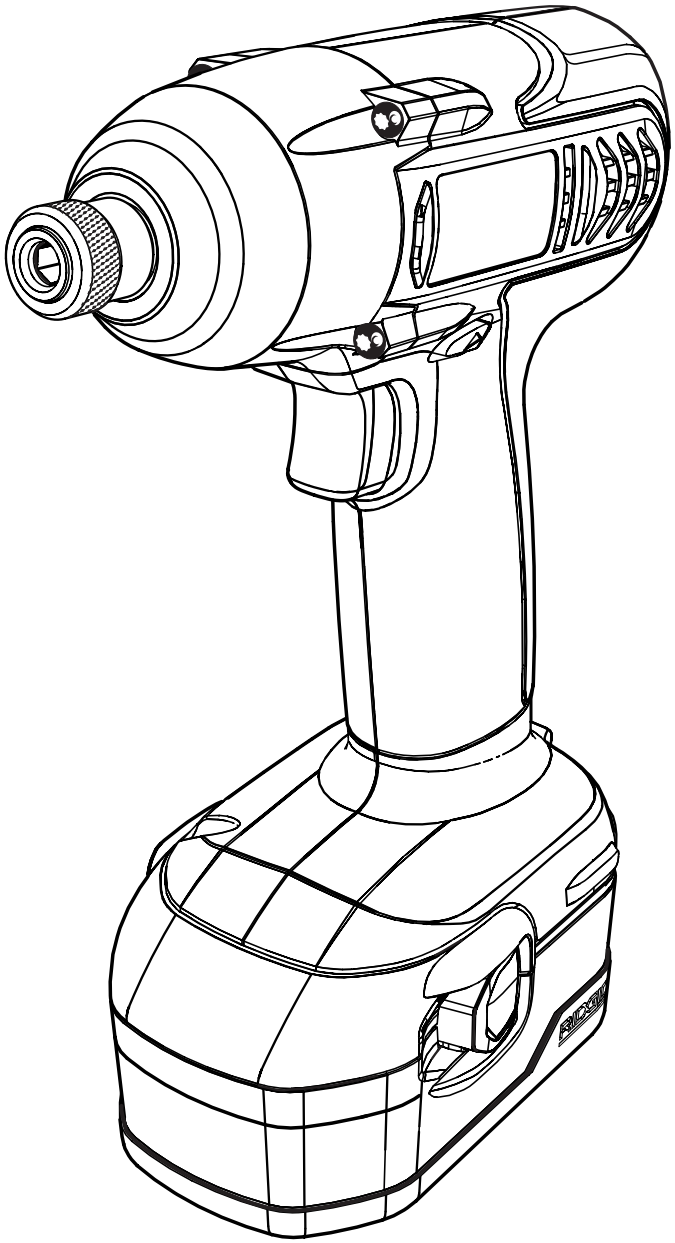

Your impact driver has been engineered and manufactured to our high standards for dependability, ease of operation, and operator safety. When properly cared for, it will give you years of rugged, trouble-free performance.

WARNING:
To reduce the risk of injury, the user must read and understand the operator's manual before using this product.

Thank you for buying a RIDGID product.

SAVE THIS MANUAL FOR FUTURE REFERENCE

TABLE OF CONTENTS

- Introduction 2
- General Safety Rules 3-4
- Specific Safety Rules 4
- Safety Rules for Charger 5
- Symbols 6-7
- Features 8-9
- Assembly 9
- Operation 10-13
- Maintenance 14
- Warranty 15
- Customer Service Information 16

INTRODUCTION

This tool has many features for making its use more pleasant and enjoyable. Safety, performance, and dependability have been given top priority in the design of this product making it easy to maintain and operate.

GENERAL SAFETY RULES

WARNING!
READ AND UNDERSTAND ALL INSTRUCTIONS.
Failure to follow all instructions listed below, may result in electric shock, fire and/or serious personal injury.

SAVE THESE INSTRUCTIONS

WORK AREA

- **Keep your work area clean and well lit.** Cluttered benches and dark areas invite accidents.
- **Do not operate power tools in explosive atmospheres, such as in the presence of flammable liquids, gases, or dust.** Power tools create sparks which may ignite the dust or fumes.
- **Keep bystanders, children, and visitors away while operating a power tool.** Distractions can cause you to lose control.

ELECTRICAL SAFETY

- **A battery operated tool with integral batteries or a separate battery pack must be recharged only with the specified charger for the battery.** A charger that may be suitable for one type of battery may create a risk of fire when used with another battery.
- **Use battery operated tool only with specifically designated battery pack.** Use of any other batteries may create a risk of fire.
- **Use battery only with charger listed.**

MODEL	BATTERY PACK	CHARGER
R82320	130252003, 130252004	140276001
		140276002

- **Do not abuse the cord. Never use the cord to carry the charger. Keep cord away from heat, oil, sharp edges, or moving parts. Replace damaged cords immediately.** Damaged cords may create a fire.

PERSONAL SAFETY

- **Stay alert, watch what you are doing and use common sense when operating a power tool. Do not use tool while tired or under the influence of drugs, alcohol, or medication.** A moment of inattention while operating power tools may result in serious personal injury.
- **Dress properly. Do not wear loose clothing or jewelry. Contain long hair. Keep your hair, clothing, and gloves away from moving parts.** Loose clothes, jewelry, or long hair can be caught in moving parts.
- **Avoid accidental starting. Be sure switch is in the locked or off position before inserting battery pack.** Carrying tools with your finger on the switch or inserting the battery pack into a tool with the switch on invites accidents.
- **Remove adjusting keys or wrenches before turning the tool on.** A wrench or a key that is left attached to a rotating part of the tool may result in personal injury.
- **Do not overreach. Keep proper footing and balance at all times.** Proper footing and balance enable better control of the tool in unexpected situations.
- **Use safety equipment. Always wear eye protection.** Dust mask, non-skid safety shoes, hard hat, or hearing protection must be used for appropriate conditions.
- **Do not wear loose clothing or jewelry. Contain long hair.** Loose clothes, jewelry, or long hair can be drawn into air vents.
- **Do not use on a ladder or unstable support.** Stable footing on a solid surface enables better control of the tool in unexpected situations.

TOOL USE AND CARE

- **Use clamps or other practical way to secure and support the workpiece to a stable platform.** Holding the work by hand or against your body is unstable and may lead to loss of control.
- **Do not force tool. Use the correct tool for your application.** The correct tool will do the job better and safer at the rate for which it is designed.
- **Do not use tool if switch does not turn it on or off.** A tool that cannot be controlled with the switch is dangerous and must be repaired.
- **Disconnect battery pack from tool or place the switch in the locked or off position before making any adjustments, changing accessories, or storing the tool.** Such preventive safety measures reduce the risk of starting the tool accidentally.
- **Store idle tools out of reach of children and other untrained persons.** Tools are dangerous in the hands of untrained users.
- **When battery pack is not in use, keep it away from other metal objects like: paper clips, coins, keys, nails, screws, or other small metal objects that can make a connection from one terminal to another.** Shorting the battery terminals together may cause sparks, burns, or a fire.
- **Maintain tools with care. Keep cutting tools sharp and clean.** Properly maintained tools with sharp cutting edges are less likely to bind and are easier to control.
- **Check for misalignment or binding of moving parts, breakage of parts, and any other condition that may affect the tool's operation. If damaged, have the tool serviced before using.** Many accidents are caused by poorly maintained tools.
- **Use only accessories that are recommended by the manufacturer for your model.** Accessories that may be suitable for one tool may create a risk of injury when used on another tool.
- **Keep the tool and its handle dry, clean and free from oil and grease.** Always use a clean cloth when cleaning. Never use brake fluids, gasoline, petroleum-based products, or any strong solvents to clean your tool. Following this rule will reduce the risk of loss of control and deterioration of the enclosure plastic.

GENERAL SAFETY RULES

SERVICE

- **Tool service must be performed only by qualified repair personnel.** Service or maintenance performed by unqualified personnel may result in a risk of injury.
- **When servicing a tool, use only identical replacement parts. Follow instructions in the Maintenance section of this manual.** Use of unauthorized parts or failure to follow Maintenance Instructions may create a risk of shock or injury.

SPECIFIC SAFETY RULES

- **Hold tool by insulated gripping surfaces when performing an operation where the screw may contact hidden wiring.** Contact with a "live" wire will also make exposed metal parts of the tool "live" and shock the operator.
- **Know your power tool. Read operator's manual carefully. Learn its applications and limitations, as well as the specific potential hazards related to this tool.** Following this rule will reduce the risk of electric shock, fire, or serious injury.
- **Always wear safety glasses with side shields.** Everyday glasses have only impact resistant lenses. They are NOT safety glasses. Following this rule will reduce the risk of eye injury.
- **Protect your lungs. Wear a face or dust mask if the operation is dusty.** Following this rule will reduce the risk of serious personal injury.
- **Protect your hearing. Wear hearing protection during extended periods of operation.** Following this rule will reduce the risk of serious personal injury.
- **Battery tools do not have to be plugged into an electrical outlet; therefore, they are always in operating condition. Be aware of possible hazards when not using your battery tool or when changing accessories.** Following this rule will reduce the risk of electric shock, fire, or serious personal injury.
- **Do not place battery tools or their batteries near fire or heat.** This will reduce the risk of explosion and possibly injury.
- **Never use a battery that has been dropped or received a sharp blow.** A damaged battery is subject to explosion. Properly dispose of a dropped or damaged battery immediately.
- **Batteries vent hydrogen gas and can explode in the presence of a source of ignition, such as a pilot light.** To reduce the risk of serious personal injury, never use any cordless product in the presence of open flame. An exploded battery can propel debris and chemicals. If exposed, flush with water immediately.
- **Do not charge battery tool in a damp or wet location.** Following this rule will reduce the risk of electric shock.
- **For best results, your battery tool should be charged in a location where the temperature is more than 50°F but less than 100°F. Do not store outside or in vehicles.**
- **Under extreme usage or temperature conditions, battery leakage may occur. If liquid comes in contact with your skin, wash immediately with soap and water, then neutralize with lemon juice or vinegar. If liquid gets into your eyes, flush them with clean water for at least 10 minutes, then seek immediate medical attention.** Following this rule will reduce the risk of serious personal injury.
- **Do not use the impact driver as a drill.** The impact driver is not designed to be used as a drill.
- **Do not drive a screw where there may be hidden wiring behind the surface.** Contact with a "live" wire will make exposed metal parts of the tool "live" and shock the operator.
- **Save these instructions.** Refer to them frequently and use them to instruct others who may use this tool. If you loan someone this tool, loan them these instructions also.

SAFETY RULES FOR CHARGER

WARNING!
READ AND UNDERSTAND ALL INSTRUCTIONS. Failure to follow all instructions listed below, may result in electric shock, fire and/or serious personal injury.

- **Before using battery charger,** read all instructions and cautionary markings in this manual, on battery charger, battery, and product using battery to prevent misuse of the products and possible injury or damage.

CAUTION:
To reduce the risk of electric shock or damage to the charger and battery, charge only nickel-cadmium rechargeable batteries as specifically designated on your charger. Other types of batteries may burst, causing personal injury or damage.

- **Do not use charger outdoors or expose to wet or damp conditions.** Water entering charger will increase the risk of electric shock.
- **Use of an attachment not recommended or sold by the battery charger manufacturer may result in a risk of fire, electric shock, or injury to persons.** Following this rule will reduce the risk of electric shock, fire, or serious personal injury.
- **Do not abuse cord or charger.** Never use the cord to carry the charger. Do not pull the charger cord rather than the plug when disconnecting from receptacle. Damage to the cord or charger could occur and create an electric shock hazard. Replace damaged cords immediately.
- **Make sure cord is located so that it will not be stepped on, tripped over, come in contact with sharp edges or moving parts or otherwise subjected to damage or stress.** This will reduce the risk of accidental falls, which could cause injury, and damage to the cord, which could result in electric shock.
- **Keep cord and charger from heat to prevent damage to housing or internal parts.**
- **Do not let gasoline, oils, petroleum-based products, etc. come in contact with plastic parts.** They contain chemicals that can damage, weaken, or destroy plastic.
- **An extension cord should not be used unless absolutely necessary.** Use of improper extension cord could result in a risk of fire and electric shock. If extension cord must be used, make sure:
  a. That pins on plug of extension cord are the same number, size and shape as those of plug on charger.
  b. That extension cord is properly wired and in good electrical condition; and
  c. That wire size is large enough for AC ampere rating of charger as specified below:

Cord Length (Feet)	25’	50’	100’
Cord Size (AWG)	16	16	16

  NOTE: AWG = American Wire Gauge
- **Do not operate charger with a damaged cord or plug,** which could cause shorting and electric shock. If damaged, have the charger replaced by an authorized serviceman.
- **Do not operate charger if it has received a sharp blow, been dropped, or otherwise damaged in any way.** Take it to an authorized serviceman for electrical check to determine if the charger is in good working order.
- **Do not disassemble charger.** Take it to an authorized serviceman when service or repair is required. Incorrect reassembly may result in a risk of electric shock or fire.
- **Unplug charger from outlet before attempting any maintenance or cleaning to reduce the risk of electric shock.**
- **Disconnect charger from the power supply when not in use.** This will reduce the risk of electric shock or damage to the charger if metal items should fall into the opening. It also will help prevent damage to the charger during a power surge.
- **Risk of electric shock.** Do not touch uninsulated portion of output connector or uninsulated battery terminal.
- **Save these instructions.** Refer to them frequently and use them to instruct others who may use this tool. If you loan someone this tool, loan them these instructions also to prevent misuse of the product and possible injury.

WARNING:
Some dust created by power sanding, sawing, grinding, drilling, and other construction activities contains chemicals known to cause cancer, birth defects or other reproductive harm. Some examples of these chemicals are:
- lead from lead-based paints,
- crystalline silica from bricks and cement and other masonry products, and
- arsenic and chromium from chemically-treated lumber.

Your risk from these exposures varies, depending on how often you do this type of work. To reduce your exposure to these chemicals: work in a well ventilated area, and work with approved safety equipment, such as those dust masks that are specially designed to filter out microscopic particles.

SYMBOLS

Some of the following symbols may be used on this tool. Please study them and learn their meaning. Proper interpretation of these symbols will allow you to operate the tool better and safer.

SYMBOL	NAME	DESIGNATION/EXPLANATION
V	Volts	Voltage
A	Amperes	Current
Hz	Hertz	Frequency (cycles per second)
W	Watt	Power
min	Minutes	Time
∿	Alternating Current	Type of current
⎓	Direct Current	Type or a characteristic of current
n_o	No Load Speed	Rotational speed, at no load
⧈	Class II Construction	Double-insulated construction
.../min	Per Minute	Revolutions, strokes, surface speed, orbits etc., per minute
	Wet Conditions Alert	Do not expose to rain or use in damp locations.
	Read The Operator's Manual	To reduce the risk of injury, user must read and understand operator's manual before using this product.
	Eye Protection	Always wear safety goggles or safety glasses with side shields and a full face shield when operating this product.
	Safety Alert	Precautions that involve your safety.
	No Hands Symbol	Failure to keep your hands away from the blade will result in serious personal injury.
	No Hands Symbol	Failure to keep your hands away from the blade will result in serious personal injury.
	No Hands Symbol	Failure to keep your hands away from the blade will result in serious personal injury.
	No Hands Symbol	Failure to keep your hands away from the blade will result in serious personal injury.
	Hot Surface	To reduce the risk of injury or damage, avoid contact with any hot surface.

SYMBOLS

The following signal words and meanings are intended to explain the levels of risk associated with this product.

SYMBOL	SIGNAL	MEANING
⚠	**DANGER:**	Indicates an imminently hazardous situation, which, if not avoided, will result in death or serious injury.
⚠	**WARNING:**	Indicates a potentially hazardous situation, which, if not avoided, could result in death or serious injury.
⚠	**CAUTION:**	Indicates a potentially hazardous situation, which, if not avoided, may result in minor or moderate injury.
	CAUTION:	(Without Safety Alert Symbol) Indicates a situation that may result in property damage.

SERVICE

Servicing requires extreme care and knowledge and should be performed only by a qualified service technician. For service we suggest you return the product to your nearest **AUTHORIZED SERVICE CENTER** for repair. When servicing, use only identical replacement parts.

⚠ **WARNING:**

To avoid serious personal injury, do not attempt to use this product until you read thoroughly and understand completely the operator's manual. Save this operator's manual and review frequently for continuing safe operation and instructing others who may use this product.

⚠ **WARNING:**

The operation of any power tool can result in foreign objects being thrown into your eyes, which can result in severe eye damage. Before beginning power tool operation, always wear safety goggles or safety glasses with side shields and a full face shield when needed. We recommend Wide Vision Safety Mask for use over eyeglasses or standard safety glasses with side shields. Always use eye protection which is marked to comply with ANSI Z87.1.

SAVE THESE INSTRUCTIONS

FEATURES

PRODUCT SPECIFICATIONS

Motor	14.4 Volt DC
Switch	Variable Speed
No Load Speed	0-2850/min.
Blows Per Minute	0-2800/BPM
Charger Input	120 V, 60 Hz, AC only
Charge Rate	20 minutes
Torque	Maximum 1400 in.lb.

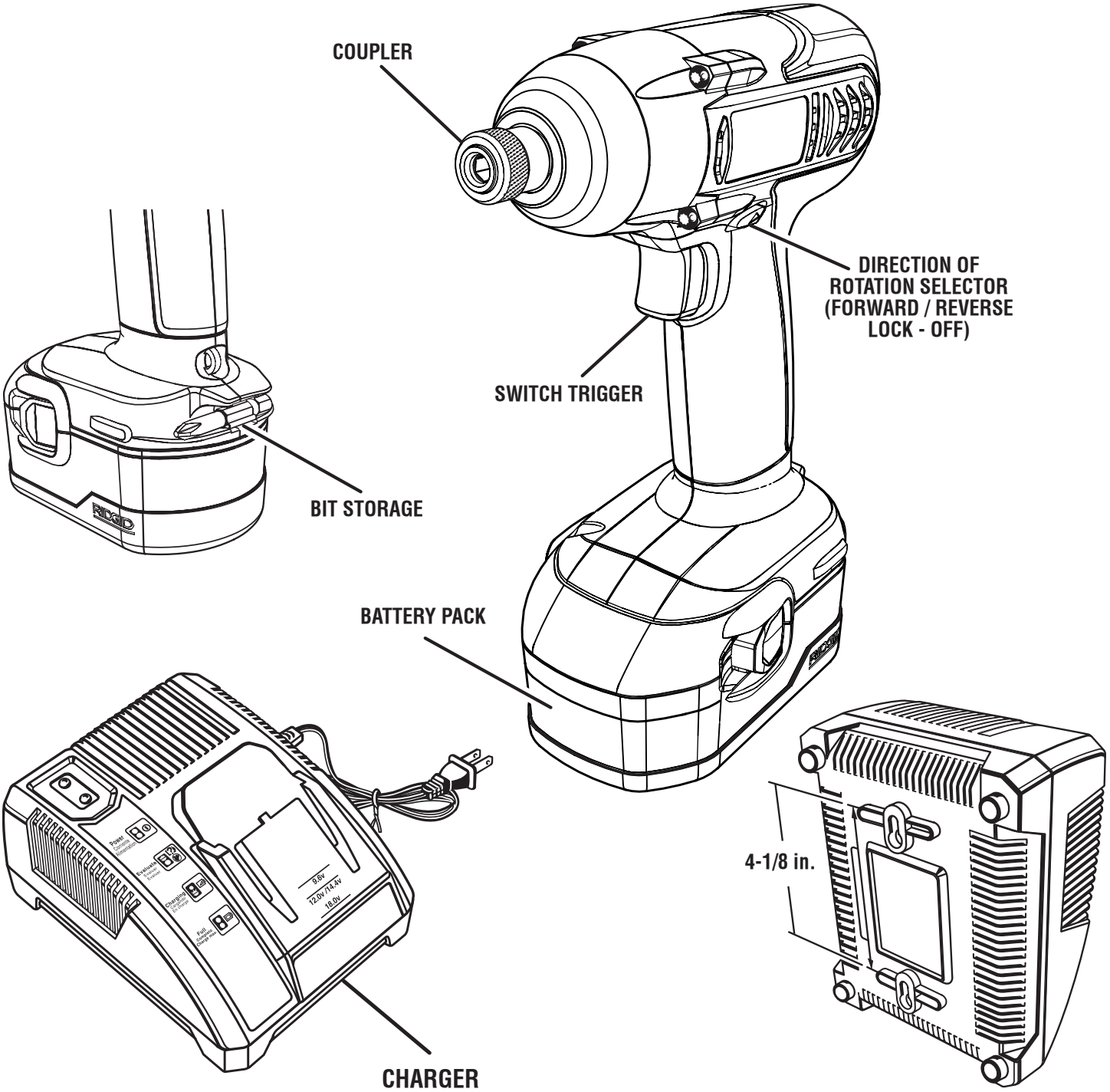

Fig. 1

FEATURES

KNOW YOUR IMPACT DRIVER

See Figure 1.

Before attempting to use this product, familiarize yourself with all operating features and safety rules.

COUPLER

Quickly and easily change bits without the need for separate tools.

VARIABLE SPEED SWITCH TRIGGER

The variable speed switch trigger allows the operator to use one hand to hold the tool and control the speed of the bit.

DIRECTION OF ROTATION SELECTOR

Conveniently located direction of rotation selector allows the operator to switch rotation direction of the bit. It is also used to lock the switch trigger for changing bits or transporting the driver.

MINIMUM REACTIVE TORQUE

This impact driver minimizes the amount of reactive torque to the operator.

COMPACT DESIGN

The short, compact design of the impact driver allows the operator to get into tight areas.

BLOWS PER MINUTE

This tool features an impact speed of 0-2,800 Blows Per Minute (BPM). Blows Per Minute is the number of impacts per minute.

BIT STORAGE

Bit storage is located on the base of the impact driver for safe convenient storage of a bit not in use.

ELECTRIC BRAKE

The electric brake will stop the bit rotation after the operator releases the switch trigger.

CHARGER

The charger has a "key hole" hanging feature for convenient, space saving storage. Screws should be installed so that the center distance is 4-1/8 in.

ASSEMBLY

UNPACKING

This product has been shipped completely assembled.

- Carefully remove the tool and any accessories from the box.
- Make sure that all items listed in the packing list are included.
- Inspect the tool carefully to make sure no breakage or damage occurred during shipping.
- Do not discard the packing material until you have carefully inspected and satisfactorily operated the tool.
- If any parts are damaged or missing, please call 1-866-539-1710 for assistance.

PACKING LIST

Impact Driver

Battery Pack

Charger

Bit

Case

Operator's Manual

WARNING:
If any parts are missing do not operate this tool until the missing parts are replaced. Failure to do so could result in possible serious personal injury.

WARNING:
Do not attempt to modify this tool or create accessories not recommended for use with this tool. Any such alteration or modification is misuse and could result in a hazardous condition leading to possible serious personal injury.

WARNING:
To prevent accidental starting that could cause serious personal injury, always remove the battery pack from the tool when assembling parts.

OPERATION

WARNING:
Do not allow familiarity with your tool to make you careless. Remember that a careless fraction of a second is sufficient to inflict severe injury.

WARNING:
Always wear safety goggles or safety glasses with side shields when operating tools. Failure to do so could result in objects being thrown into your eyes resulting in possible serious injury.

WARNING:
Do not use any attachments or accessories not recommended by the manufacturer of this tool. The use of attachments or accessories not recommended can result in serious personal injury.

APPLICATIONS

You may use this tool for the purposes listed below:

- Driving screws, lag bolts
- Tightening nuts and bolts
- Removing screws, nuts, and bolts

CAUTION:
If at any point during the charging process none of the LEDs are lit, remove the battery pack from the charger to avoid damaging the product. DO NOT insert another battery. Return the charger and battery to your nearest service center for service or replacement.

CHARGING THE BATTERY PACK

The battery pack for this tool has been shipped in a low charge condition to prevent possible problems. Therefore, you should charge it until the light on front of charger changes from flashing green to continuous green.

NOTE: Batteries will not reach full charge the first time they are charged. Allow several cycles (operation followed by recharging) for them to become fully charged. This is normal for nickel-cadmium batteries.

TO CHARGE

See Figure 2.

- Charge the battery pack only with the charger provided.
- **Make sure the power supply is normal house voltage, 120 volts, 60 Hz, AC only.**
- Connect the charger to a power supply.
- Attach the battery pack to the charger by aligning the raised ribs on the battery pack with the grooves in the charger, then slide the battery pack onto the charger.
- After normal usage, 20 minutes of charging time is required to be fully charged.

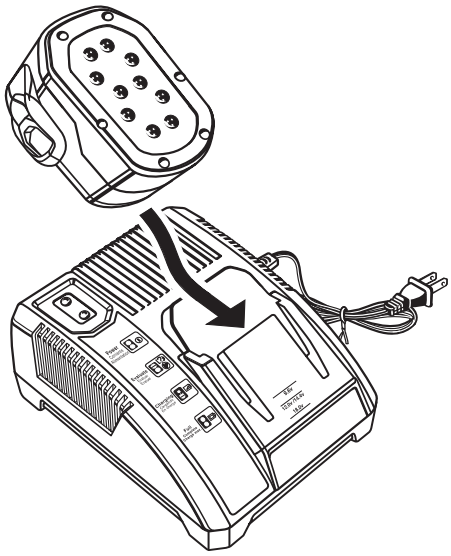

Fig. 2

- The battery pack will become slightly warm to the touch while charging. This is normal and does not indicate a problem.
- Do not place the charger in an area of extreme heat or cold. It will work best at normal room temperature.
- When the batteries become fully charged, unplug the charger from the power supply and remove the battery pack.

IMPORTANT INFORMATION FOR RECHARGING A HOT BATTERY PACK

When using the tool continuously, the batteries in the battery pack will become hot. You should let a hot battery pack cool down for approximately 30 minutes before attempting to recharge. When the battery pack becomes discharged and is hot, the green LED will be off and the red LED will begin flashing.

When the battery pack cools down to approximately 104°F (40°C), the charger will automatically begin fast charge mode.

If the Red LED continues to flash for more than 90 minutes, and the green LED remains off, this may indicate a damaged battery that will not charge.

IMPORTANT INFORMATION FOR RECHARGING A COOL BATTERY PACK

If the battery pack is below normal temperature range, the red LED will begin flashing and the green LED will be off. When the battery warms to a temperature of more than 41°F (5°C), the charger will automatically begin fast charge mode.

NOTE: Refer to **"CHARGING THE BATTERY PACK"** for normal recharging of batteries. If the charger does not charge your battery pack under normal circumstances, return both the battery pack and charger to your nearest repair center for electrical check. For the location of your nearest repair center, please call 1-866-539-1710.

OPERATION

LED FUNCTION OF CHARGER

See Figure 3.

LED INDICATOR		BATTERY PACK	RED LED	GREEN LED	ACTION
Power Corriente Alimentation	Power	Without battery pack	ON	OFF	Ready to charge battery pack
Evaluate Evaluar Evaluer	Evaluate	Hot battery pack	Flashing	OFF	When battery pack reaches cooled temperature, charger begins fast charge mode
	Evaluate	Cold battery pack	Flashing	OFF	When battery pack reaches warmed temperature, charger begins fast charge mode
	Evaluate	Deeply discharged	Flashing	OFF	Charger pre-charges battery until normal voltage is reached, then begins fast charge mode
	Evaluate	Thermistor shorted or open	Flashing	OFF	If red LED continues flashing for more than 90 minutes, and green LED remains off, this may indicate a damaged battery
Charging Cargando En charge	Charging	Fast charging	ON	Flashing	Fast charges in 20 minutes
Full Completo Charge max.	Full	Slow charging	OFF	ON	Fast charging is complete. Charger maintains charge mode.

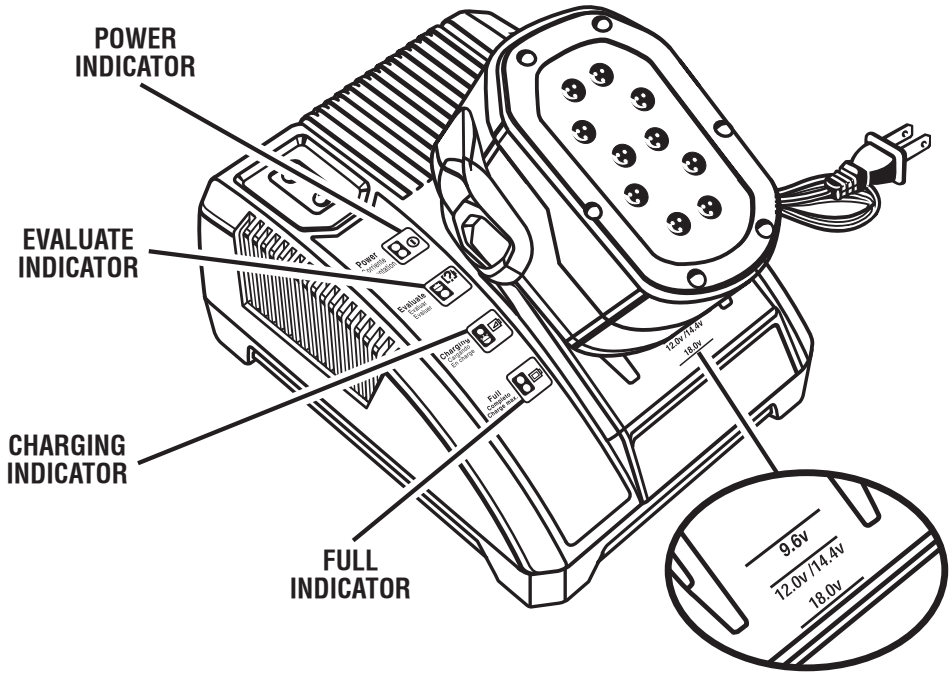

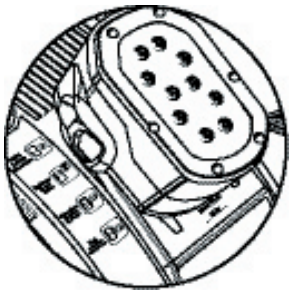

NOTE: The 9.6 volt, 12 volt, and 14.4 volt battery packs will not slide all the way down onto the charger port. Insert 9.6 volt, 12 volt, and 14.4 volt battery packs until they click into place and are aligned with the line on the charger, shown at left.

Allow up to 5 seconds for the “charge” light to come on after the battery pack is inserted.

Fig. 3

INSTALLING BITS

See Figure 4.

- Lock the switch trigger on the driver by placing the direction of rotation (forward-reverse) selector in center lock position.
- Remove the battery pack from the driver.
- Pull the coupler away from the driver (1).
- Insert driver bit to be used into the coupler (2).
- Release the coupler (3).
- Pull on the bit to make sure it is secured in the coupler. There may be some play in the installed bit, this is normal.

  NOTE: Use only impact quality bits with a locking groove.

WARNING:
Make sure the bit is secured in the coupler before using the driver. Failure to do so could cause serious personal injury.

REMOVING BITS

See Figure 4.

- Place the direction of rotation selector in the center lock position.
- Remove the battery pack from the driver.
- Pull the coupler away from the driver.
- Remove driver bit from the coupler.

CAUTION:
The impact driver is not designed to be used as a drill.

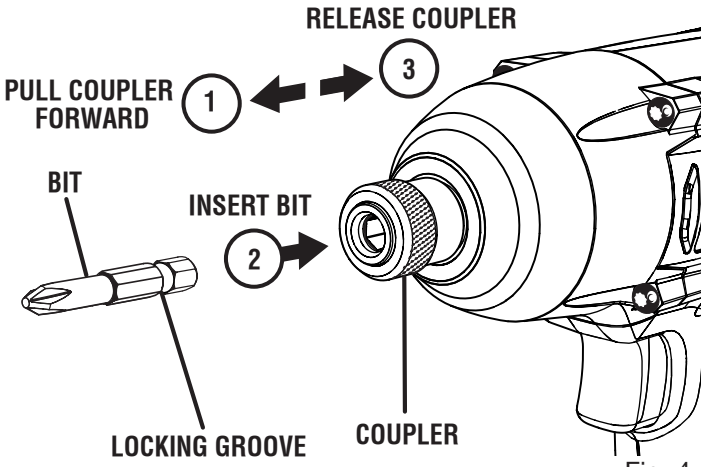

Fig. 4

TO INSTALL BATTERY PACK

See Figure 5.

- Place the battery pack in the driver aligning raised rib on battery pack with groove in the driver's battery port.
- Make sure the latches on each side of the battery pack snap into place and the battery pack is secured to the driver before beginning operation.

CAUTION:
When placing battery pack in the tool, be sure raised rib on battery pack aligns with the bottom of the drill and latches into place properly. Improper installation of the battery pack can cause damage to internal components.

TO REMOVE BATTERY PACK

See Figure 6.

- Locate the latches on the side of the battery pack and depress both sides to release the battery pack from the driver.
- Remove the battery pack from the driver.

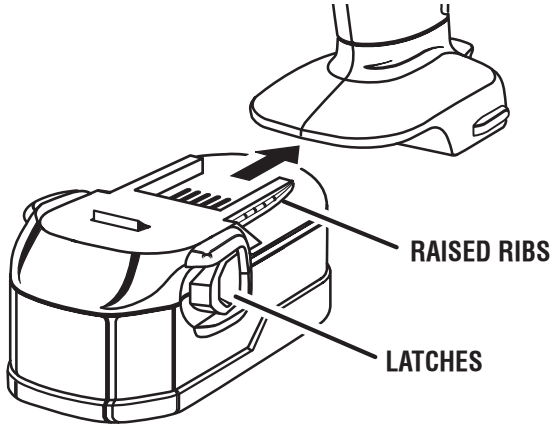

Fig. 5

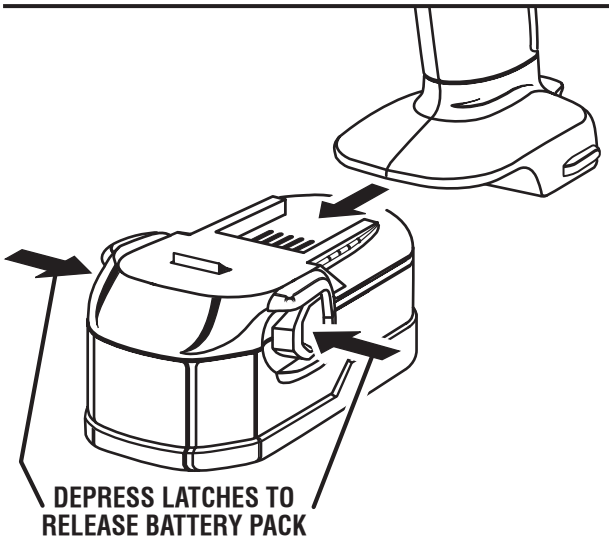

Fig. 6

SWITCH TRIGGER

See Figure 7.

- To turn your driver **ON**, depress the switch trigger. To turn it **OFF**, release the switch trigger.

VARIABLE SPEED

See Figure 7.

This tool has a variable speed switch that delivers higher speed and torque with increased trigger pressure. Speed is controlled by the amount of switch trigger depression.

DIRECTION OF ROTATION SELECTOR

See Figure 7.

To select the bit rotation, depress the direction of rotation selector.

- To select the bit to rotate clockwise (tighten), push the selector to the left.
- To select the bit to rotate counterclockwise (loosen), push the selector to the right.
- To lock out the switch trigger function, move the selector to the center (lock-off) position.

WARNING:
Battery tools are always in operating condition. Therefore, switch should always be locked when not in use or carrying at your side.

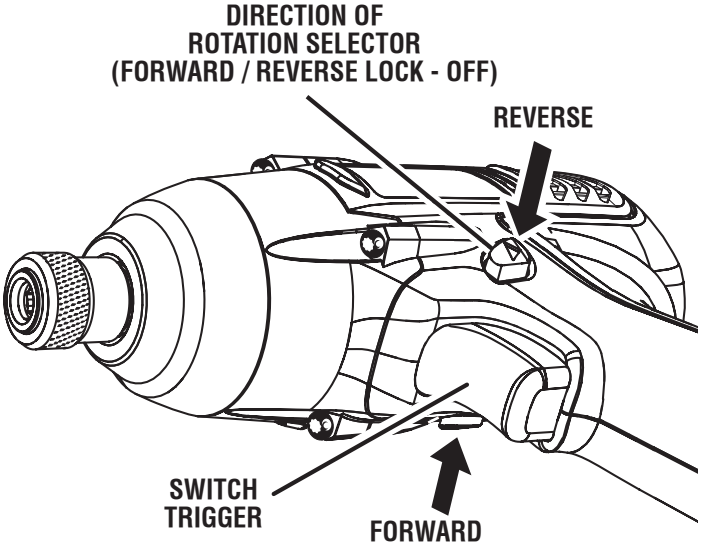

Fig. 7

DRIVING OR REMOVING SCREWS

See Figures 8 - 9.

- Place the direction of rotation selector in the correct position for the operation.
- Hold the driver with one hand.
- Place the bit on the screw head and slowly depress the switch trigger. We recommend starting the bit slowly for more control.
- As screw is driven, impacting will begin.

WARNING:
Do not drive a screw where there may be hidden wiring behind the surface. Contact with a “live” wire will make exposed metal parts of the tool “live” and shock the operator.

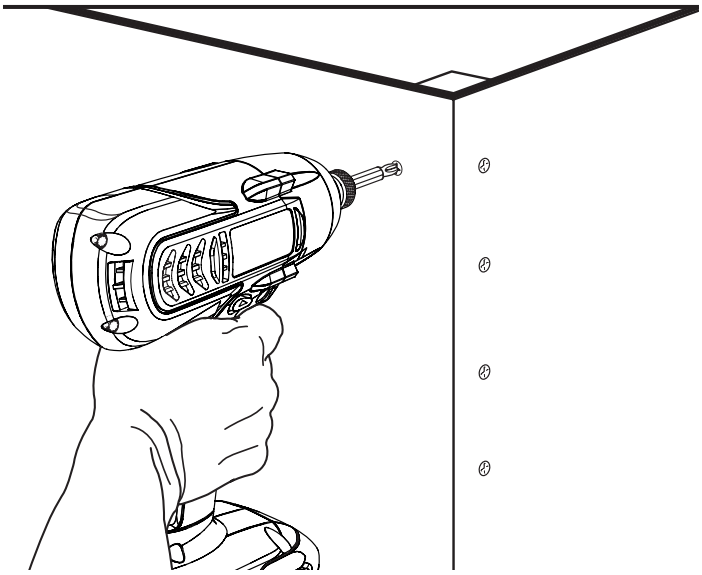

Fig. 8

WARNING
Hold tool by insulated gripping surfaces when performing an operation where the screw may contact hidden wiring. Contact with a “live” wire will also make exposed metal parts of the tool “live” and shock the operator.

WRONG

Fig. 9

MAINTENANCE

WARNING:
When servicing use only identical RIDGID replacement parts. Use of any other parts may create a hazard or cause product damage.

WARNING:
Always wear safety goggles or safety glasses with side shields during power tool operation or when blowing dust. If operation is dusty, also wear a dust mask.

WARNING:
To avoid serious personal injury, always remove the battery pack from the tool when cleaning or performing any maintenance.

GENERAL MAINTENANCE

Avoid using solvents when cleaning plastic parts. Most plastics are susceptible to damage from various types of commercial solvents and may be damaged by their use. Use clean cloths to remove dirt, dust, oil, grease, etc.

WARNING:
Do not at any time let brake fluids, gasoline, petroleum-based products, penetrating oils, etc., come in contact with plastic parts. Chemicals can damage, weaken or destroy plastic which may result in serious personal injury.

Only the parts shown on the parts list are intended to be repaired or replaced by the customer. All other parts should be replaced at a RIDGID authorized service center.

BATTERIES

The battery pack for this tool is equipped with nickel-cadmium rechargeable batteries. Length of service from each charging will depend on the type of work you are doing.

The batteries in this tool have been designed to provide maximum trouble-free life. However, like all batteries, they will eventually wear out. **Do not** disassemble battery pack and attempt to replace the batteries. Handling of these batteries, especially when wearing rings and jewelry, could result in a serious burn.

To obtain the longest possible battery life, we suggest the following:

- Remove the battery pack from the charger once it is fully charged and ready for use.

For battery pack storage longer than 30 days:

- Store the battery pack where the temperature is below 80°F.
- Store battery packs in a "discharged" condition.

BATTERY PACK REMOVAL AND PREPARATION FOR RECYCLING

To preserve natural resources, please recycle or dispose of batteries properly.

This product contains nickel-cadmium batteries. Local, state or federal laws may prohibit disposal of nickel-cadmium batteries in ordinary trash.

Consult your local waste authority for information regarding available recycling and/or disposal options.

WARNING:
Upon removal, cover the battery pack's terminals with heavy-duty adhesive tape. Do not attempt to destroy or disassemble battery pack or remove any of its components. Nickel-cadmium batteries must be recycled or disposed of properly. Also, never touch both terminals with metal objects and/or body parts as short circuit may result. Keep away from children. Failure to comply with these warnings could result in fire and/or serious injury.

WARRANTY

RIDGID® HAND HELD AND STATIONARY POWER TOOL 3 YEAR LIMITED SERVICE WARRANTY

Proof of purchase must be presented when requesting warranty service.

Limited to RIDGID® hand held and stationary power tools purchased 2/1/04 and after. This product is manufactured by One World Technologies, Inc. The trademark is licensed from RIDGID, Inc. All warranty communications should be directed to One World Technologies, Inc., attn: RIDGID Hand Held and Stationary Power Tool Technical Service at (toll free) 1-866-539-1710.

90-DAY SATISFACTION GUARANTEE POLICY

During the first 90 days after the date of purchase, if you are dissatisfied with the performance of this RIDGID® Hand Held and Stationary Power Tool for any reason you may return the tool to the dealer from which it was purchased for a full refund or exchange. To receive a replacement tool you must present proof of purchase and return all original equipment packaged with the original product. The replacement tool will be covered by the limited warranty for the balance of the 3 YEAR service warranty period.

WHAT IS COVERED UNDER THE 3 YEAR LIMITED SERVICE WARRANTY

This warranty on RIDGID® Hand Held and Stationary Power Tools covers all defects in workmanship or materials and normal wear items such as brushes, chucks, motors, switches, cords, gears and even cordless batteries in this RIDGID® tool for three years following the purchase date of the tool. Warranties for other RIDGID® products may vary.

HOW TO OBTAIN SERVICE

To obtain service for this RIDGID® tool you must return it; freight prepaid, or take it in to an authorized service center for RIDGID® branded hand held and stationary power tools. You may obtain the location of the authorized service center nearest you by calling (toll free) 1-866-539-1710 or by logging on to the RIDGID® website at www.ridgid.com. When requesting warranty service, you must present the original dated sales receipt. The authorized service center will repair any faulty workmanship, and either repair or replace any part covered under the warranty, at our option, at no charge to you.

WHAT IS NOT COVERED

This warranty applies only to the original purchaser at retail and may not be transferred. This warranty only covers defects arising under normal usage and does not cover any malfunction, failure or defect resulting from misuse, abuse, neglect, alteration, modification or repair by other than an authorized service center for RIDGID® branded hand held and stationary power tools. Consumable accessories provided with the tool such as, but not limited to, blades, bits and sand paper are not covered.

RIDGID, INC. AND ONE WORLD TECHNOLOGIES, INC. MAKE NO WARRANTIES, REPRESENTATIONS OR PROMISES AS TO THE QUALITY OR PERFORMANCE OF ITS POWER TOOLS OTHER THAN THOSE SPECIFICALLY STATED IN THIS WARRANTY.

ADDITIONAL LIMITATIONS

To the extent permitted by applicable law, all implied warranties, including warranties of MERCHANTABILITY or FITNESS FOR A PARTICULAR PURPOSE, are disclaimed. Any implied warranties, including warranties of merchantability or fitness for a particular purpose, that cannot be disclaimed under state law are limited to three years from the date of purchase. One World Technologies, Inc. and RIDGID, Inc. are not responsible for direct, indirect, incidental or consequential damages. Some states do not allow limitations on how long an implied warranty lasts and/or do not allow the exclusion or limitation of incidental or consequential damages, so the above limitations may not apply to you. This warranty gives you specific legal rights, and you may also have other rights which vary from state to state.

One World Technologies, Inc.
P.O. Box 35, Hwy. 8
Pickens, SC 29671

OPERATOR'S MANUAL

14.4 VOLT 1/4 in. IMPACT DRIVER
R82320

Customer Service Information:

For parts or service, contact your nearest RIDGID authorized service center. Be sure to provide all relevant information when you call or visit. For the location of the authorized service center nearest you, please call 1-866-539-1710 or visit us online at www.ridgid.com.

The model number of this tool is found on a plate attached to the motor housing. Please record the serial number in the space provided below. When ordering repair parts, always give the following information:

Model No. R82320

Serial No. _____

983000-576
3-24-06 (REV:01)