Air-Cooled Condensing Units

(Includes 50BD Combination)

General - The 09BB012 condenser can be coupled with a 50BB008 or 012 Weathermaker® unit to form a 50BD combination.

The condenser is designed to match with, or arranged to be field mounted to the back of 50BB units.

The condenser can also be mounted remote.

Air discharge can be vertical or horizontal, in or out the same face.

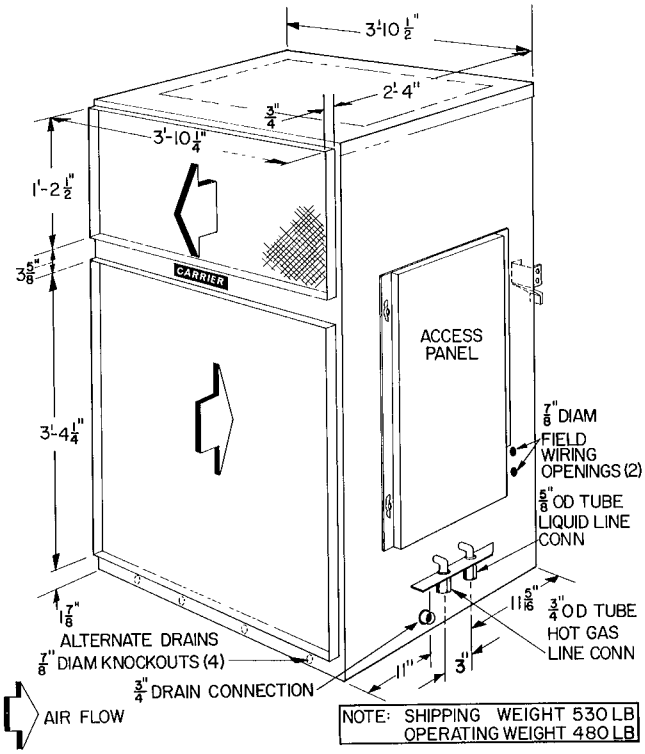

Fig. 1 - 09BB012 Air-Cooled Condenser

Receiving the Unit - Inspect unit for shipping damage. Enter any claims directly with the transportation company.

Carrier Air Conditioning Company will not be responsible for damage incurred in transit.

Uncrating - Remove unit and hardware from shipping skid. Check to see that unit and component parts conform to the bill of lading. Contents of fastener package are listed in Table 1.

Before Installation - Check space requirements, service clearances, floor strength, location of piping, size of power supply, and location of ductwork (Fig. 2 and Fig. 3).

Make sure rigging equipment is adequate. Avoid undue force against side and front panels when lifting unit.

Table 1 - Fastener Package Contents

UNIT	QUANTITY	DESCRIPTION
1	4	Locking bolt 1/4–20 × 1" hex hd
2	2	Vibration isolators
3	2	Support bolt 5/16–18 × 3" hex hd
4	2	Support bolt nuts 5/16–18
5	2	Channel bolts 3/8–16 × 1" hex hd
6	2	Lockwashers 3/8"
7	4	Thd forming screws 1/4 × 1-1/4"
8	4	External locktooth washers 1/4"
9	2	Plain washers 5/16"

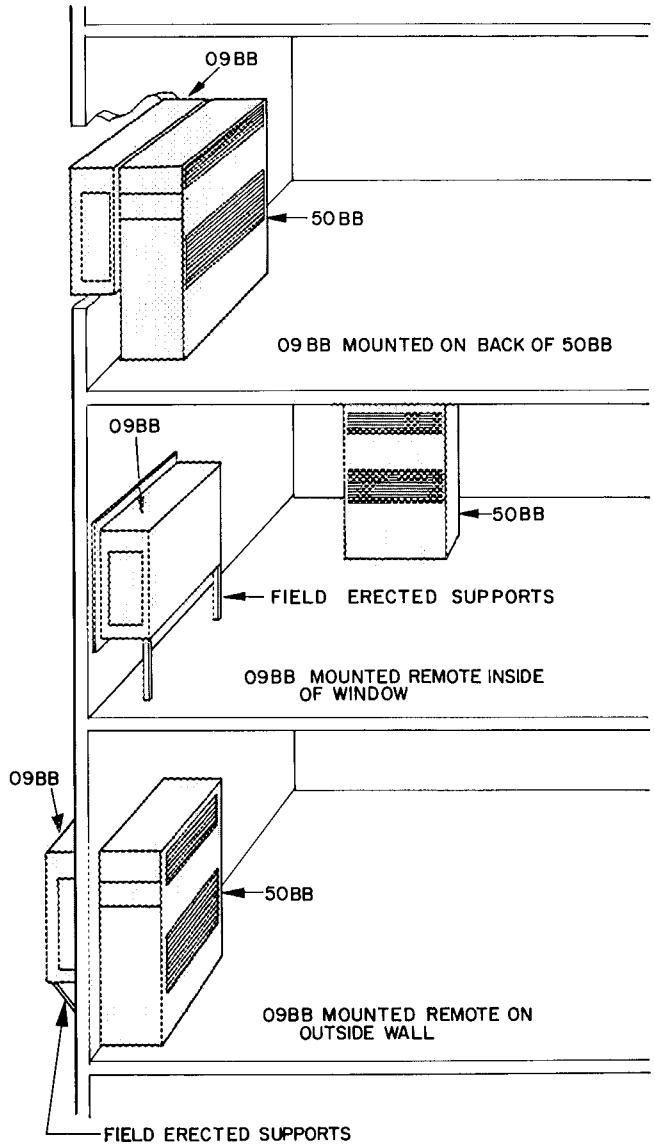

Fig. 2 - Mounting Arrangements

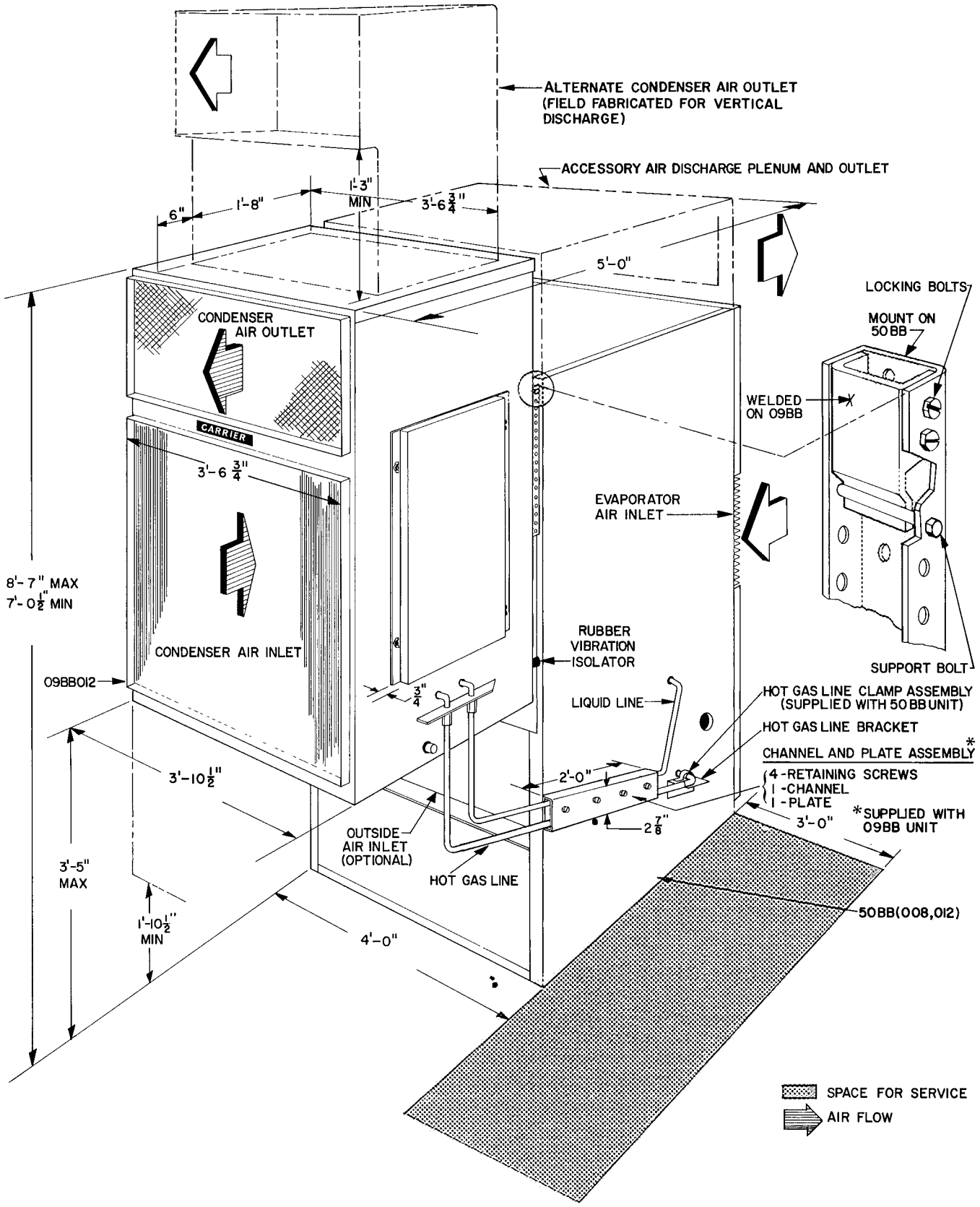

Fig. 3 - 50BD Combination

INSTALLATION

Mounting Brackets - Two mounting brackets are supplied for mounting the 09BB unit to the 50BB unit (Fig. 4). These brackets have been designed to provide adjustable heights for the 09BB to the nearest 1/2 in. This is done by providing two sets of mounting holes on the bracket, spaced 1-1/2 in. apart. The upper mounting holes allow 09BB unit height adjustment in 1-in. increments starting 1 ft 10-1/2 in. from the floor. The lower mounting holes allow height adjustment in 1-in. increments starting 2 ft from the floor.

Install brackets as follows:

1. Remove the top four retaining screws on each side of the back panel of 50BB.
2. Select mounting holes and place bracket in position. Install with retaining screws and channel bolts in shipping holes (Fig. 4).
3. Install support bolts as shown in Fig. 3.
4. Install vibration isolators (supplied) in lowest hole each side of 50BB back panel (Fig. 4). Remove Tinnerman nut and install each vibration isolator with 5/16 in. plain washer (supplied in fastener package).

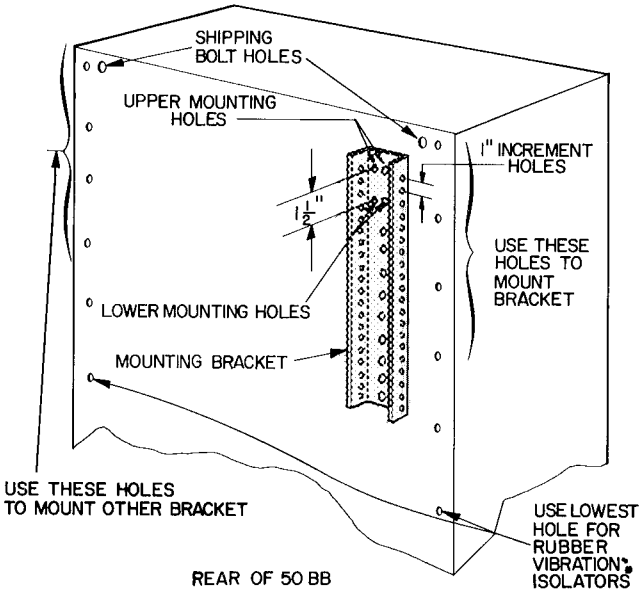

Fig. 4 - Installation of Mounting Brackets

Positioning 09BB Unit - For typical installation refer to Fig. 3.

WARNING: The 50BB unit will not balance the 09BB unit without additional support.

Once 09BB unit has been positioned in the mounting brackets, install locking bolts as shown in mounting bracket detail.

Before sliding units into final position, check for clearance to access panels, and service area to install piping.

Vertical Discharge - 09BB unit can be mounted as shown in Fig. 5. It will be necessary to relocate the electrical junction box either external to unit (as shown) or on an interior panel.

Also, provide a rain drain on back of unit.

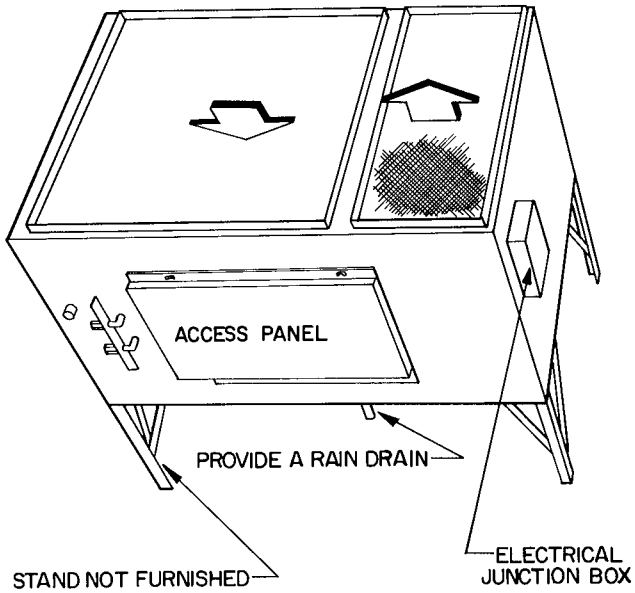

Fig. 5 - 09BB Vertical Discharge

PIPING

09BB hot gas and liquid line piping is factory supplied when field mounting the 09BB to the 50BB. The preformed piping is arranged for various mounting heights. Cut the vertical rise of tubes for height adjustment. No bending is required.

09BB units are factory charged with refrigerant. Liquid and hot gas lines are installed as follows:

Compatible Fittings - Liquid and hot gas lines are installed from the 50BB unit to the 09BB unit with Carrier compatible fittings and service valves. These fittings may be used as sweat or mechanical connections. Install either type as follows:

MECHANICAL CONNECTIONS

1. Cut tubing to length and remove burrs. Be careful not to expand tubing.
2. Remove plug from fitting and loosen nut one turn.
3. Position tube. Remove cap and insert tube in fitting to depth indicated on tag (1-1/4" depth for 5/8" and 3/4" tube, 3/4" depth for 3/8" and 5/16" tube).
4. Leave nut loose at condenser end of each tube. Purge one line at a time using 50BB base unit holding charge.
5. Tighten nut to a stop on unit fitting collar.
6. Open all service valves.

SWEAT CONNECTIONS

1. Cut tubing to length and remove burrs. Be careful not to expand tubing.
2. Clean tubing. Remove plug and nut from fitting.
3. IMPORTANT - Remove O ring from inside fitting. Wrap entire valve with wet rag.
4. Insert tubing in fitting and solder with low-temperature solder (450 F) such as Allstate 430.

NOTE: Make solder connection at 50BB unit, then connect to 09BB unit except for soldering. Purge with 50BB holding charge, then solder.

Brackets - After installing piping from 50BB to 09BB units, install the following:

HOT GAS LINE BRACKET - Install proper size rubber-coated clamp assembly (furnished in 50BB fastener package) to hot gas line bracket (Fig. 3).

CHANNEL AND PLATE ASSEMBLY - Figure 3 illustrates correct assembling and positioning for this assembly.

Remote Piping - For 09BB remote installation, select pipe sizes according to length from the following table.

Table 2 - Remote Pipe Sizing (in.)

UNIT 50BB	LENGTH OF PIPE									
	0-15 (ft)		16-25 (ft)		26-50 (ft)		51-75 (ft)		76-100 (ft)	
	HG	Liq	HG	Liq	HG	Liq	HG	Liq	HG	Liq
008	3/4	5/8	7/8	5/8	7/8	5/8	1-1/8	7/8	1-1/8	7/8
012	3/4	5/8	7/8	7/8	1-1/8	7/8	1-1/8	7/8	1-1/8	7/8

HG – Hot Gas Line
Liq – Liquid Line

NOTES:
1. Normal number of elbows and fittings have been considered in sizing pipes.
2. Pressure loss thru recommended hot gas line check valve has been considered for 25-100 ft lengths.
3. Use of a hot gas line check valve is recommended on 50BB012 units with field-supplied piping.

To connect piping, use instructions previously given for compatible fittings. Use refrigerant grade piping. If tubing size is other than unit connection sizes, use adapter fittings.

Refer to 50BB Installation Instructions to determine refrigerant charge adjustment for remote piping.

Drains - The 09BB unit provides a choice of two drain systems for installation. The choice is governed by unit location.

EXTERNAL DRAINAGE - If unit is located with front panel outside of building, there are four 7/8-in. knockouts that can be used for external drainage (Fig. 1).

INTERNAL DRAINAGE - The base pan has a 3/4-in. coupling for an interior drain outlet (for rainwater). Remove the plug from the drain outlet and install a trap in the piping if this system is used.

IMPORTANT: For vertical discharge unit, provide a rain drain on back of unit (Fig. 5). On all units, before connecting drains trim away insulation blocking the hole(s).

Pitch drain pipes downward for proper drainage. Provide tees plugged one side for cleanouts. Leave clearance for servicing. Observe local sanitary codes.

For other piping details refer to Carrier System Design Manual.

Ductwork - The 09BB unit is designed for use without ductwork or rain louvers. If either is used, care must be taken to eliminate air recirculation. Recirculation can be minimized by blocking the front discharge and discharging thru an extension elbow. When properly designed, hinged discharge louvers can be applied to ductwork, also to the condenser air discharge. Fixed rain louvers over discharge outlets can cause excessive recirculation and nuisance high-pressure switch cutouts. Obstructions closer than 20 ft to the discharge air pattern can cause significant recirculation.

If ductwork is used from standard discharge openings and another "bird screen" is provided, remove Carrier supplied screen to reduce static pressure load.

CONDENSER AIR DUCT INSULATION

The condenser air duct must be insulated on indoor installations to prevent moisture condensation on the unit panels during cold weather. Insulate as follows:

1. If metal ductwork is used, insulation should be applied on the inside of the duct. This insulation should be extended to cover the inside of the 09BB duct flanges.

   It is necessary to insulate the inside of the ducts at the duct flanges to reduce heat loss from the metal cabinet by conduction thru the duct flanges and into the cold duct. Interior insulation allows the metal duct to approach room temperature. It also prevents condensation from forming and collecting under the insulation which will occur with exterior duct insulation.

2. If insulation is applied to the outside of the metal duct, the inside must be insulated for a length of ten inches from the unit (including the duct flanges) or up to the flexible duct vapor barrier on the outside which must be tightly sealed to prevent condensation under the insulation.

3. A high-density fiberglass (2 lb minimum density) or semirigid foamed insulation such as Styrofoam will be required inside the ducts to prevent air erosion. The insulation must be firmly secured in the discharge duct near the blower discharge to withstand the high air velocity.

Fan Adjustment - Check fan blade location before start-up. Figure 6 indicates proper fan position in relation to the fan orifice.

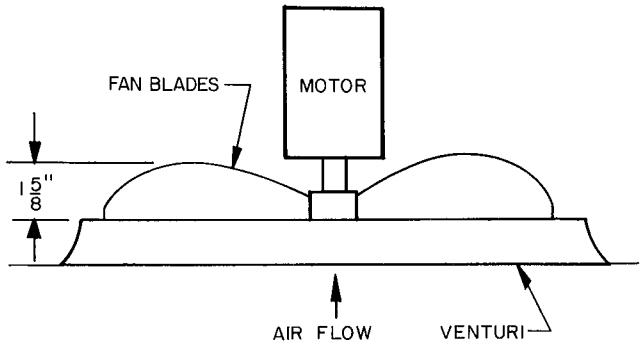

Fig. 6 - Position of Condenser Fan

ELECTRICAL DATA

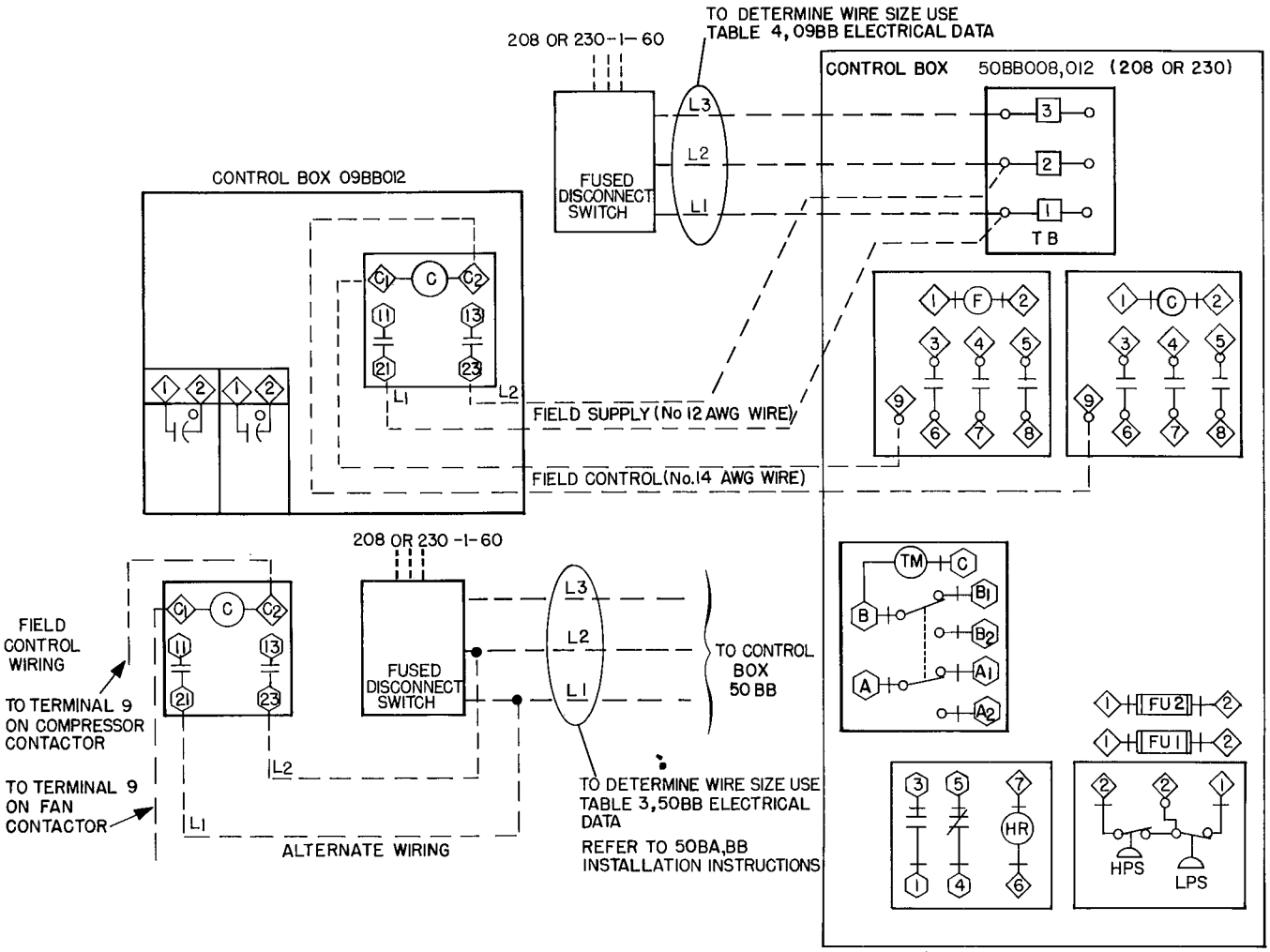

LEGEND

- ◇ Component Connections Unmarked
- ○ Component Connections Marked
- □ Terminal Board Connections
- ---Field Wiring

C – Compressor Contactor
HPS – High Pressure Switch
F – Fan Contactor
FU – Fuse
HR – Holding Relay
LPS – Low Pressure Switch
TB – Terminal Block
TM – Timer Motor

Fig. 7 - Typical 50BD Wiring and Component Arrangement

ELECTRICAL DATA (Cont)

Refer to Table 3 for 09BB fan motor characteristics. Refer to Table 4 for wire and fuse sizing. Refer to Fig. 7 for combination field wiring.

Table 3 - 09BB Condenser Fan Motor

HORSEPOWER	FULL LOAD AMPS	LOCKED ROTOR AMPS
1	7	18

Table 4 - Wire and Fuse Sizing

50BD* COMBINATION	VOLTAGE (3-Phase, 60-Cycle)	WIRE SIZE† (AWG)	WIRE MAX LENGTH (ft)‡	MAX FUSE (Amps)
09BB012/50BB008	208	6 4 2	61 92 140	50
	230	6 4 2	77 117 175	45
09BB012/50BB012	208	4 2	67 100	70
	230	4 2	79 119	60

*When power is supplied to 09BB from 50BB terminal block, use this table to size wires from fused disconnect to 50BB terminal block.
†60° wire.
‡Based on 1% voltage drop.

NOTES:
1. When power to 09BB is supplied from 50BB disconnect, refer to 50BB Installation Instructions for wire sizes from fused disconnect to 50BB
2. Power to 09BB can also be supplied from separate fused disconnect. For this method, use 15 amp fuses and No 12 wire
3. Power supply voltage must be within ±10% of nameplate voltage.

MAINTENANCE

Cleaning - 09BB unit should be thoroughly cleaned inside and out. Frequency of cleaning will depend on unit location and area conditions.

Drains must be kept free of dirt and trash. Coils can be cleaned with a stiff brush, vacuum cleaner or compressed air. Coil can be reached thru access panels.

Inspection - Check coil baffles for tight fit to prevent air from bypassing the coil.

Check panels for air leakage, particularly those sealing the fan and coil compartments.

Check for loose electrical connections, oil level, proper refrigerant charge and refrigerant piping leaks.

NOTE: 09BB fan motor is permanently lubricated. Does not require further lubrication. Before start-up, be sure all service valves are open (backseated).

Manufacturer reserves the right to change any product specifications without notice