Axor Starck Classic Widespread Lavatory Set

10133XX1

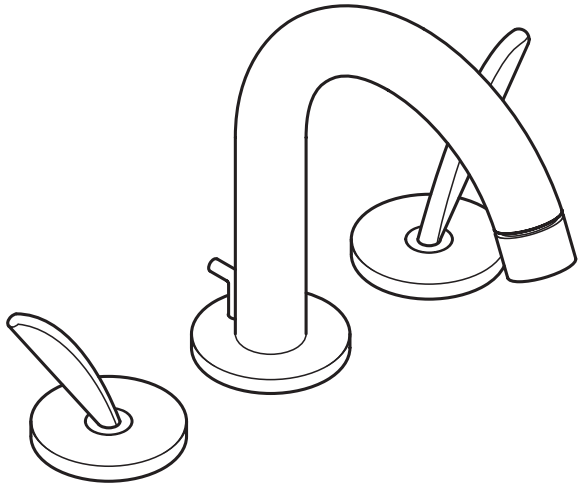

Product Features

- Feather style handles with low profile trim
- 90° Ceramic cartridges
- Flexible connecting hoses accommodate a variety of installations
- Cascade no-clog aerator
- 2.2 gpm max.
- Includes pop-up drain

Code Compliance

This unit meets or exceeds the following:

- ASME A112.18.1
- CSA B125.1
- Listed by IAPMO
- ADA compliant
- Approved for use in Massachusetts

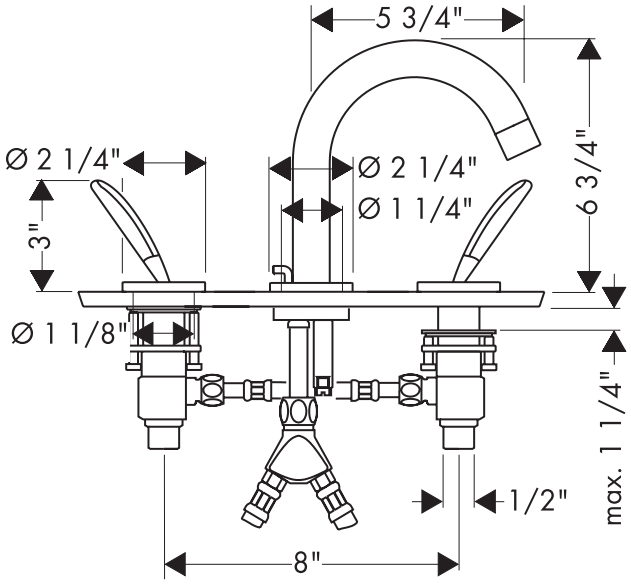

Available Finishes

Chrome	10133001
Brushed Nickel	10133821

Required Accessories

- Requires 1/2″ supply lines

Installation Notes

- Max. thickness of mounting surface 1 1/4″
- Hole sizes in mounting surface: valves 1 1/4″, spout 1 3/8″

The measurements shown are for reference only.

Products and specifications shown are subject to change without notice.

Specification sheet revised 11/2007

AXOR hansgrohe