Application Note 42

Implementing the RC5040 and RC5042 DC-DC Converters on Pentium® Pro Motherboards

Introduction

This document describes how to implement a switching voltage regulator using an RC5040 or an RC5042 high speed controller, a power inductor, a Schottky diode, appropriate capacitors, and external power MOSFETs. This regulator forms a step down DC-DC converter that can deliver up to 14.5A of continuous load current at voltages ranging from 2.1V to 3.5V. A specific application circuit, design considerations, component selection, PCB layout guidelines and performance evaluation procedures are covered in detail.

In the past 10 years, microprocessors have evolved at such an exponential rate that a modern chip can rival the computing power of a mainframe computer. Such evolution has been possible because of the increasing numbers of transistors that processors integrate. Pentium CPUs, for example, integrate well over 5 million transistors on a single piece of silicon.

To integrate so many transistors on a piece of silicon, their physical geometry has been reduced to the sub-micron level. As a result of each geometry reduction, the corresponding operational voltage for each transistor has also been reduced. This changing voltage for the CPU demands the design of a programmable power supply—a design that is not completely re-engineered with every change in CPU voltage.

The operational voltage of CPUs has shown a downwards trend for the past 5 years: from 5V for the x386 and x486, to 3.3V for Pentium, and 3.1V for Pentium Pro. Furthermore, emerging chip technologies may require operating voltages as low as 2.5V. With this trend in mind, Raytheon Electronics has designed the RC5040 and RC5042 controllers. These controllers integrate the necessary programmability to address the changing power supply requirements of lower voltage CPUs.

Previous generations of DC-DC converter controllers were designed with fixed output voltages adjustable only with a set of external resistors. In a high volume production environment (such as with personal computers), however, a CPU voltage change requires a CPU board re-design to accommodate the new voltage requirement. The integrated 4-bit DAC in the RC5040 and the RC5042 reads the voltage ID code from the Pentium Pro microprocessor and configures the system to provide the appropriate voltage. In this manner, the PC board does not have to be re-designed each time the CPU voltage changes. The CPU can thus automatically configure its own required voltage.

Pentium Pro and OverDrive® Processor Power Requirements

Use Intel's AP-523 Application Note, *Pentium® Pro Processor Power Distribution Guidelines*, November 1995 (order number 242764-001), as a basic reference. The specifications contained in this document have been modified slightly from the original Intel document to include updated specifications for Pentium Pro microprocessors. Please contact Intel Corporation for specific details.

Input Voltages

Available inputs are +5V ±5% and +12V ±5%. Raytheon Electronics' DC-DC converters may use either or both inputs. Their input voltage requirements are listed in Table 1.

Table 1. Input Voltage Requirements

Part #	Controller V_{CC}	MOSFET Drain	MOSFET Gate Bias
RC5040 RC5042	+5V ±5%	+5V ±5%	+5V ±5% or 12V ±5%
RC5043	+5V ±5%	12V ±5%	12V ±5%

Pentium Pro DC Power Requirements

Refer to Table 2 for the power supply specifications for Pentium Pro and Overdrive Processors. For a motherboard design without a standard Voltage Regulator Module (VRM) socket, the on-board DC-DC converter must supply a minimum $I_{CC}P$ current of 13.9A at 2.5V and 12.4A at 3.3V. For a flexible motherboard design, the on-board converter must be able to supply 14.5A maximum $I_{CC}P$.

DC Voltage Regulation

As indicated in Table 2, the voltage level supplied to the CPU must be within ±5% of its nominal setting. Voltage regulation limits must include:

- Output load ranges specified in Table 2
- Output ripple/noise
- DC output initial voltage set point
- Temperature and warm up drift (Ambient +10°C to +60°C at full load with a maximum rate of change of 5°C per 10 minutes minimum but no more than 10°C per hour)
- Output load transient with:
  Slew rate >30A/µs at the converter pins
  Range: 0.3A – $I_{CC}P$ Max (as defined in Table 2).

Table 2. Intel Pentium Pro and OverDrive Processor Power Specifications

CPU Model & Features	Voltage Specification $V_{CC}P$ (VDC)	Maximum Current $I_{CC}P$ (A)	Maximum Thermal Design Power[1] (W)
150MHz – 256K L2 Cache	3.1 ± 5%	9.9	29.2
166MHz – 512K L2 Cache	3.3 ± 5%	11.2	35.0
180MHz – 256K L2 Cache	3.3 ± 5%	10.1	31.7
200MHz – 256K L2 Cache	3.3 ± 5%	11.2	35.0
200MHz – 512K L2 Cache	3.3 ± 5%	12.4	37.9
OverDrive Processors			
150 MHz	2.5 ± 5%	11.2	26.7
180 MHz		12.5	29.7
200 MHz		13.9	32.9
Flexible Motherboard[2]	2.4-3.5 ± 5%	14.5	45.0

Notes:
1. Maximum power values are measured at typical $V_{CC}P$ to take into account the thermal time constant of the CPU package.
2. Flexible motherboard specifications are recommendations only. Actual specifications are subject to change.

Output Ripple and Noise

Ripple and noise are defined as periodic or random signals over the frequency band of 20MHz at the output pins. Output ripple and noise requirements of ±1.0% must be met throughout the full load range and under all specified input voltage conditions.

Efficiency

The efficiency of the DC-DC converter must be greater than 80% at high current draw and greater than 40% at low current draw.

Processor Voltage Identification

The Pentium Pro package has four voltage identification pins, VID3–VID0, that can be used for automatic selection of the power supply voltage. These pins are internally unconnected or are shorted to ground (V_{SS}). The logic status of the pins defines the voltage required by the processor. The VID codes have been implemented to support voltage specification variations on future Pentium Pro processors. These codes are presented in Table 3. A ‘1’ refers to an open pin and a ‘0’ refers to a short to ground. The $V_{CC}P$ power supply should supply the voltage that is requested or disable itself.

Table 3. Voltage Identification Codes for Pentium Pro

Data Bits				$V_{CC}P$
VID3	VID2	VID1	VID0	(VDC)
1	1	1	1	No CPU
1	1	1	0	2.1
1	1	0	1	2.2
1	1	0	0	2.3
1	0	1	1	2.4
1	0	1	0	2.5
1	0	0	1	2.6
1	0	0	0	2.7
0	1	1	1	2.8
0	1	1	0	2.9
0	1	0	1	3.0
0	1	0	0	3.1
0	0	1	1	3.2
0	0	1	0	3.3
0	0	0	1	3.4
0	0	0	0	3.5

I/O Controls

In addition to the voltage identification pins, several signals exist to control the DC-DC converter or to provide feedback from the converter to the CPU. These are Power-Good (PWRGD), Output Enable (OUTEN), and Upgrade Present ($\overline{UP}$). These signals are discussed later.

RC5040 and RC5042 Description

Simple Step-Down Converter

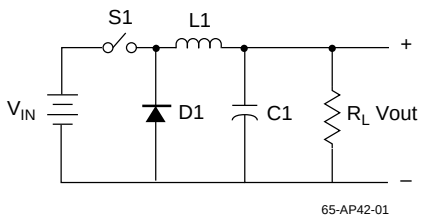

Figure 1. Simple Buck DC-DC Converter

Figure 1 illustrates a step-down DC-DC converter with no feedback control. The basic step-down converter serves as the basis for deriving the design equations for the RC5040 and RC5042. From Figure 1, the basic operation begins by closing the switch S1, so that the input voltage V_{IN} is impressed across inductor L1. The current flowing through this inductor is given by the following equation:

$$I_L = \frac{(V_{IN} - V_{OUT})T_{ON}}{L1}$$

where T_{ON} is the duty cycle (the time when S1 is closed).

When S1 opens, the diode D1 conducts the inductor current and the output current is delivered to the load according to the following equation:

$$I_L = \frac{V_{OUT}(T_S - T_{ON})}{L1}$$

where T_S is the overall switching period and ($T_S - T_{ON}$) is the time during which S1 is open.

By solving these equations you can obtain the basic relationship for the output voltage of a step-down converter:

$$V_{OUT} = V_{IN}\left(\frac{T_{ON}}{T_S}\right)$$

In order to obtain a more accurate approximation for V_{OUT}, we must also include the forward voltage V_D across diode D1 and the switching loss, V_{SW}. After taking into account these factors, the new relationship becomes:

$$V_{OUT} = (V_{IN} + V_D - V_{SW})\frac{T_{ON}}{T_S} - V_D$$

Where $V_{SW} = I_L \cdot R_{DS,ON}$.

The RC5040 and RC5042 Controllers

The RC5040 is a programmable synchronous-mode DC-DC converter controller. The RC5042 is a non-synchronous version of the RC5040. When designed with the appropriate external components, either device can be configured to deliver more than 14.5A of output current. During heavy loading conditions, these controllers function as current-mode PWM step-down regulators. Under light loads, they function in PFM (pulse frequency modulation) or pulse skipping mode. The controllers sense the load level and switch between the two operating modes automatically, thus optimizing efficiency under all loads. The key differences between the RC5040 and RC5042 are listed in Table 4.

Table 4. RC5040 and RC5042 Differences

	RC5040	RC5042
Operation	Synchronous	Non-Synchronous
Package	20-pin SOIC	16-pin SOIC
Output Enable/ Disable	Yes	No

Refer to the RC5040 Block Diagram illustrated in Figure 2. The control loop of the regulator contains two main sections: the analog control block and the digital control block. The analog block consists of signal conditioning amplifiers feeding into a set of comparators which provide the inputs to the digital block. The signal conditioning section accepts inputs from the IFB (current feedback) and VFB (voltage feedback) pins and sets two controlling signal paths. The voltage control path amplifies the VFB signal and presents the output to one of the summing amplifier inputs. The current control path takes the difference between the IFB and VFB and presents the result to another input of the summing amplifier. These two signals are then summed together with the slope compensation input from the oscillator. This output is then presented to a comparator, which provides the main PWM control signal to the digital control block.

The additional comparators in the analog control section sets the threshold for when the RC5040 enters PFM mode during light loads and the point when the current limit comparator disables the output drive signals to the MOSFETs.

The digital control block is designed to take the comparator inputs along with the main clock signal from the oscillator and provide the appropriate pulses to the HIDRV and LODRV pins that control the external power MOSFETs. The digital section was designed utilizing high speed Schottky transistor logic, thus allowing the RC5040 to operate at clock speeds as high as 1MHz.

Main Control Loop

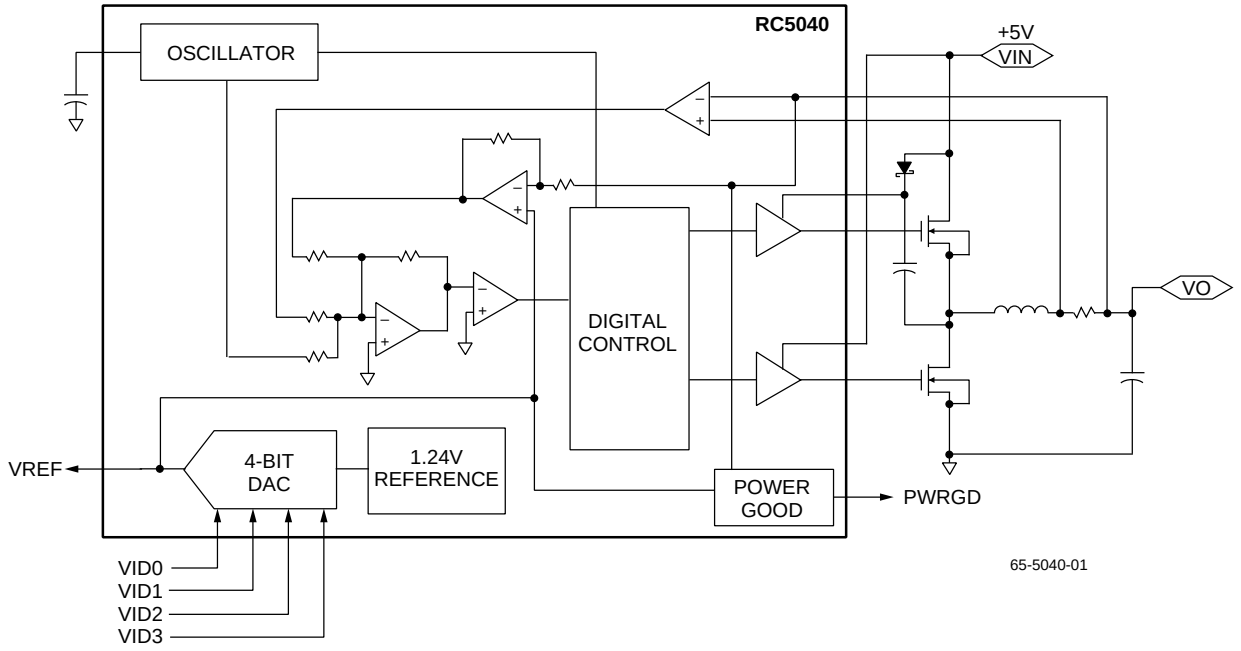

Figure 2. RC5040 Block Diagram

High Current Output Drivers

The RC5040 contains two identical high current output drivers that use high speed bipolar transistors in a push-pull configuration. Each driver is capable of delivering 1A of current in less than 100ns. Each driver's power and ground are separated from the chip power and ground for additional switching noise immunity. The HIDRV driver's power supply, VCCQP, is boot-strapped from a flying capacitor as illustrated in Figure 3. Using this configuration, C12 is charged from VCC via the Schottky diode DS2 and boosted when the FET is turned on. This scheme provides a VCCQP voltage equal to 2•VCC – VDS(DS2), or approximately 9.5V when VCC = 5V. This voltage is sufficient to provide the 9V gate drive to the MOSFET that is required to achieve a low $R_{DS(ON)}$. Since the low side synchronous FET is referenced to ground (see Figure 4), boosting the gate drive voltage is not needed and the VCCP power pin can be tied to VCC. Refer to Typical Operating Characteristics of the RC5040 data sheet for a full load VCCQP waveform.

Internal Voltage Reference

The reference used in the RC5040 is a precision band-gap voltage reference, with internal resistors precisely trimmed to provide a near zero temperature coefficient, TC. Added to the reference voltage is the output from a 4-bit DAC. The DAC is provided meet Pentium Pro specifications, requiring a programmable converter output via a 4-bit voltage identification (VID) code. This code scales the output voltage from 2.0V (no CPU) to 3.5V in 100mV increments. To guarantee stable operation under all loads, a 10KΩ pull-up resistor and 0.1µF of decoupling capacitance should be connected to the VREF pin. No load should be imposed on this pin.

Power Good (PWRGD)

The RC5040 and RC5042 Power Good function has been designed according to Intel's Pentium Pro DC-DC converter specification. The Power Good function provides a constant voltage monitor on the VFB pin. The internal circuitry of the converter compares the VFB signal to the VREF voltage and outputs an active-low interrupt signal to the CPU when the power supply voltage exceeds ±7% of its nominal setpoint. The Power Good flag provides no other control function to the RC5040.

Output Enable (OUTEN)

Intel specifications state that the DC-DC converter should accept an open collector signal for controlling the output voltage. A logic LOW for this signal disables the output voltage. When disabled, the PWRGD output is in the low state. This feature is available for the RC5040 only.

Upgrade Present (UP#)

Intel specifications state that the DC-DC converter must accept an open collector signal that indicates the presence of an upgrade processor. The typical state is high (for a standard P6 processor). When the signal is low or in theground state (for the OverDrive processor), the output voltage must be disabled unless the converter can supply the OverDrive processor's power requirements. When disabled, the PWRGD output must be in the low state. Because the RC5040 and RC5042 can supply the OverDrive processor requirements, the UP# signal is not required.

Over-Voltage Protection

The RC5040 and RC5042 constantly monitor the output voltage for protection against over voltage. If the voltage at the VFB pin exceeds 20% of the selected program voltage, an over-voltage condition is assumed, and the controller disables the output drive signal to the external MOSFET(s).

Short Circuit Protection

A current sense methodology is implemented to disable the output drive signal to the MOSFET(s) when an over-current condition is detected. The voltage drop created by the output current flowing across a sense resistor is presented to an internal comparator. When the voltage developed across the sense resistor exceeds the comparator threshold voltage, the controller disables the output drive signal to the MOSFET(s).

The DC-DC converter returns to normal operation after the fault has been removed, for either an over voltage or a short circuit condition.

Oscillator

The RC5040 oscillator section is implemented using a fixed current capacitor charging configuration. An external capacitor (CEXT) is used to preset the oscillator frequency between 200KHz and 1MHz. This allows maximum flexibility in setting the switching frequency and in choosing external components.

In general, a lower operating frequency increases the peak ripple current flowing through the output inductor, allowing the use of a larger inductor value. Operation at lower frequencies increases the amount of energy storage that the bulk output capacitors must provide during load transients that occur due to the slower loop response of the controller.

In addition, note that the efficiency losses due to switching are relatively fixed per switching cycle. Therefore, as the switching frequency increases, the contribution toward efficiency due to switching losses also increases.

RC5040 has an optimal operating frequency of 650KHz. This frequency allows the use of smaller inductive and capacitive components while optimizing peak efficiency under all operating conditions.

Design Considerations and Component Selection

Application Circuits

Figure 3 illustrates a typical non-synchronous application using the RC5040. Figure 4 shows a typical synchronous application using the RC5040, and Figure 5 shows a typical non-synchronous application using the RC5042.

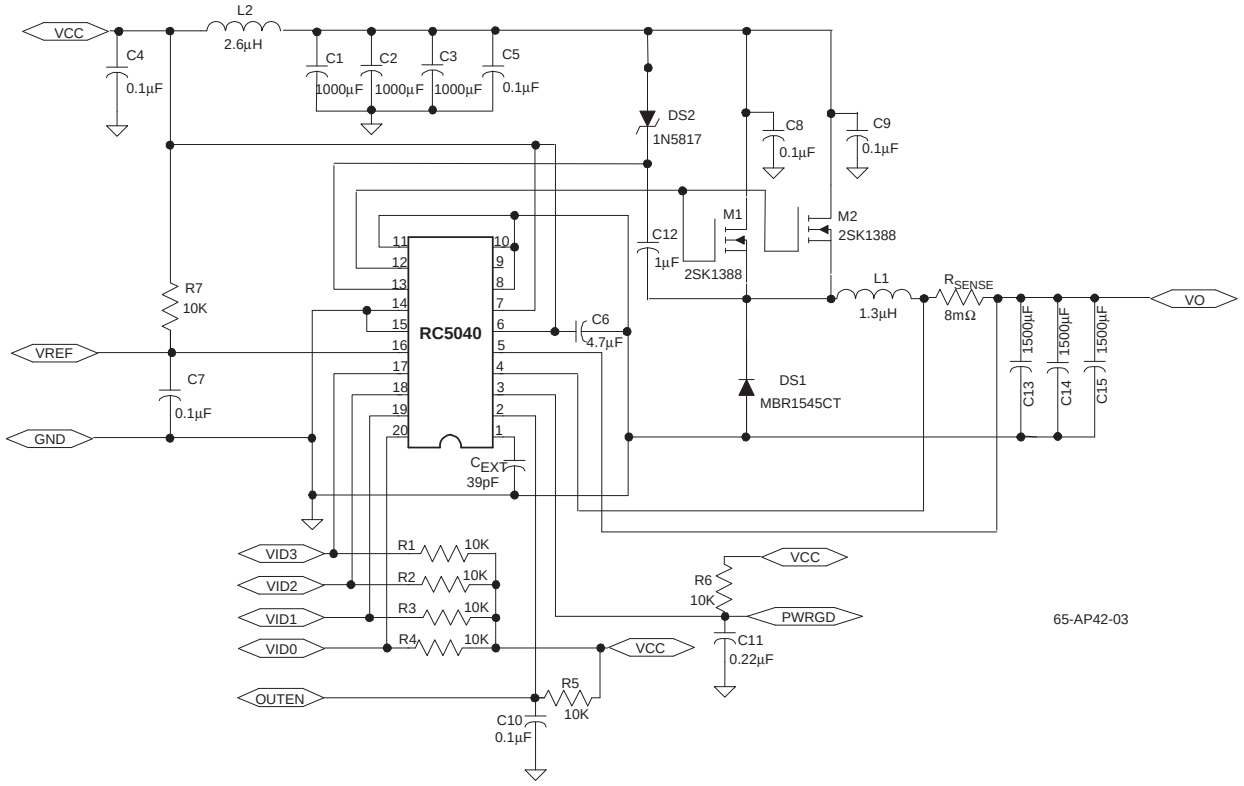

Figure 3. Non-Synchronous DC-DC Converter Application Schematic Using RC5040

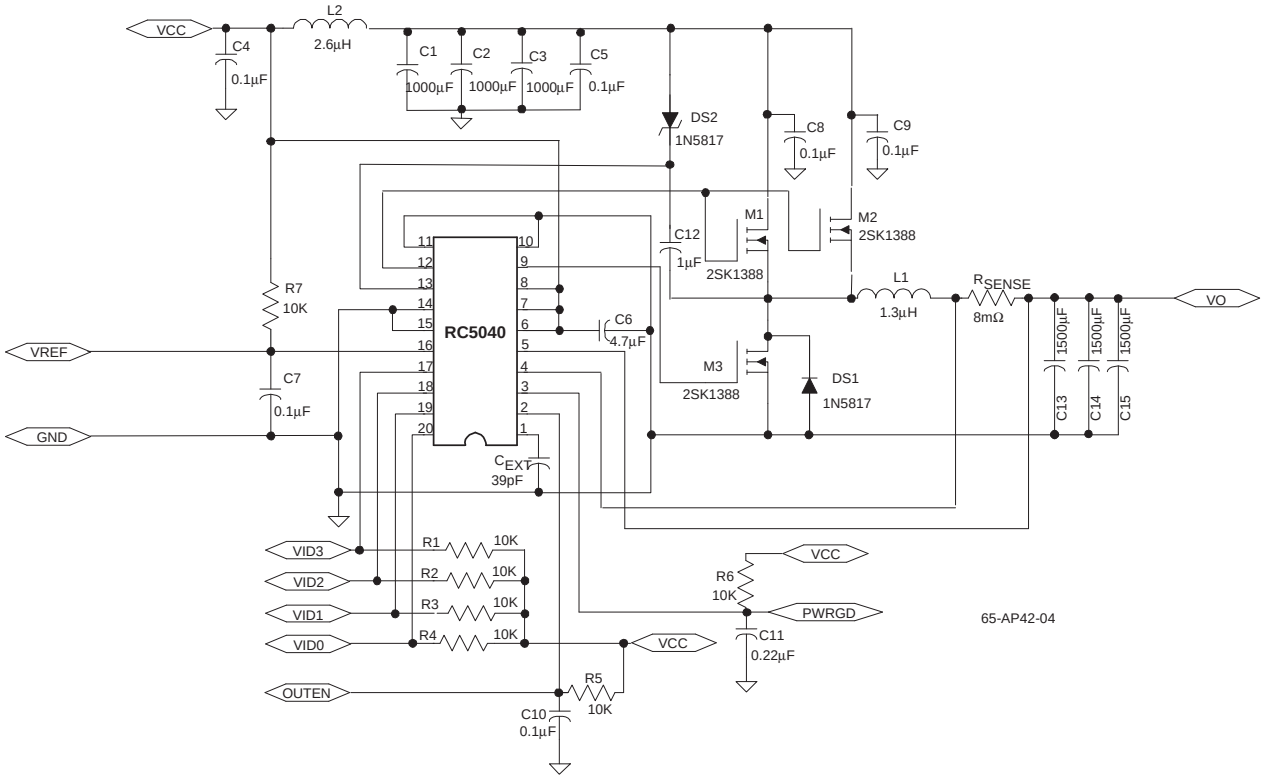

Figure 4. Synchronous DC-DC Converter Application Schematic Using RC5040

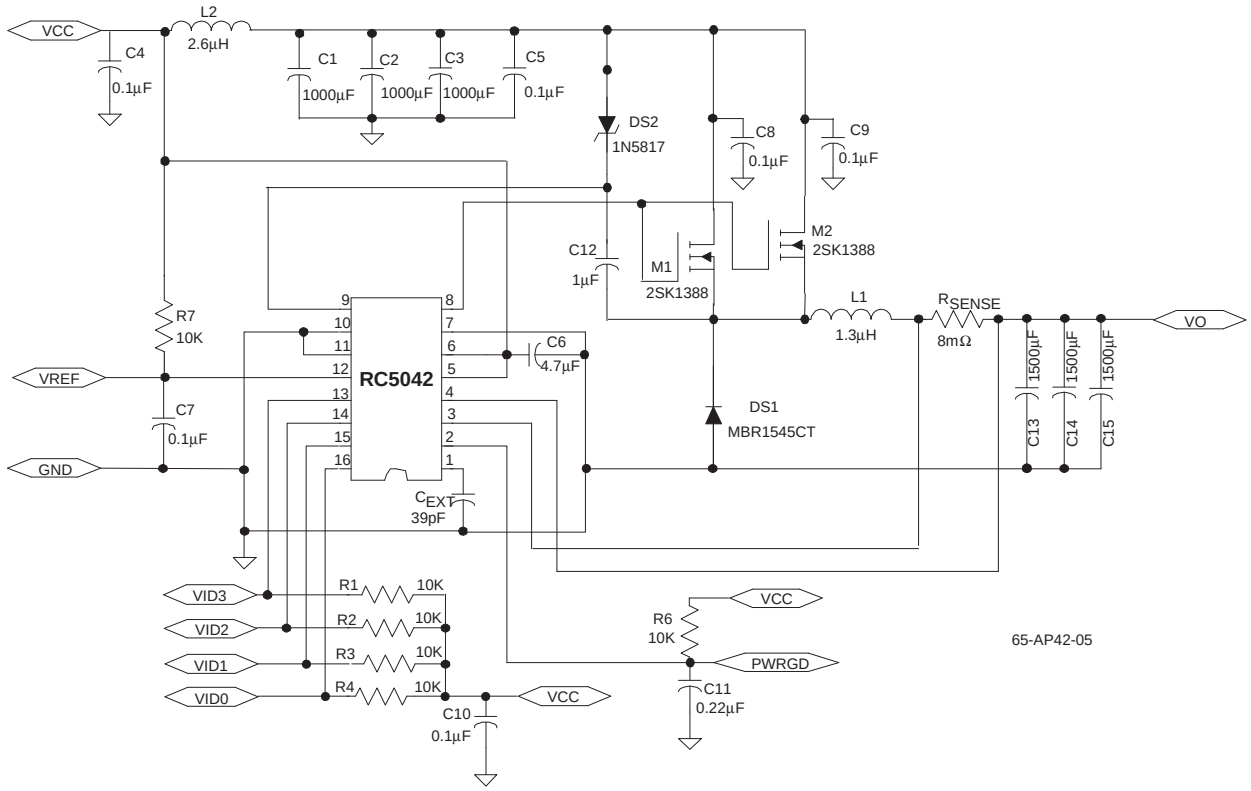

Figure 5. Non-Synchronous DC-DC Converter Application Schematic Using RC5042

MOSFET Selection

This application requires the use of N-channel, Logic Level Enhancement Mode Field Effect Transistors. The desired characteristics of these components are:

- Low Static Drain-Source On-Resistance $R_{DS,ON}$ < 37 mΩ (lower is better)
- Low gate drive voltage, $V_{GS} \leq 4.5V$
- Power package with low thermal resistance
- Drain current rating of 20A minimum
- Drain-Source voltage > 15V.

The on-resistance ($R_{DS,ON}$) is the main parameter for MOSFET selection. It determines the MOSFET's power dissipation, thus significantly affecting the efficiency of the converter. Several suitable MOSFETs are shown in Table 5.

Table 5. MOSFET Selection Table

Manufacturer & Model #	Conditions[1]		$R_{DS,ON}$ (mΩ) Typ.	$R_{DS,ON}$ (mΩ) Max.	Package	Thermal Resistance
Fuji 2SK1388	V_{GS} = 4V, I_D = 17.5A	T_J = 25°C	25	37	TO-220	Φ_{JA} = 75
		T_J = 125°C	37	—		
Siliconix SI4410DY	V_{GS} = 4.5V, I_D = 5A	T_J = 25°C	16.5	20	SO-8 (SMD)	Φ_{JA} = 50
		T_J = 125°C	28	34		
National Semiconductor NDP706AL	V_{GS} = 5V, I_D = 40A	T_J = 25°C	13	15	TO-220	Φ_{JA} = 62.5, Φ_{JC} = 1.5
NDP706AEL		T_J = 125°C	20	24		
National Semiconductor NDP603AL	V_{GS} = 4.5V, I_D = 10A	T_J = 25°C	31	40	TO-220	Φ_{JA} = 62.5
		T_J = 125°C	42	54		Φ_{JC} = 2.5
National Semiconductor NDP606AL	V_{GS} = 5V, I_D = 24A	T_J = 25°C	22	25	TO-220	Φ_{JA} = 62.5
		T_J = 125°C	33	40		Φ_{JC} = 1.5
Motorola MTB75N03HDL	V_{GS} = 5V, I_D = 37.5A	T_J = 25°C	6	9	TO-263	Φ_{JA} = 62.5
		T_J = 125°C	9.3	14	(D^2 PAK)	Φ_{JC} = 1.0
Int. Rectifier IRLZ44	V_{GS} = 5V, I_D = 31A	T_J = 25°C	—	28	TO-220	Φ_{JA} = 62.5
		T_J = 125°C	—	46		Φ_{JC} = 1.0
Int. Rectifier IRL3103S	V_{GS} = 4.5V, I_D = 28A	T_J = 25°C	—	19	TO-220	Φ_{JA} = 62.5
		T_J = 125°C		31		Φ_{JC} = 1.0

Note:
1. $R_{DS(ON)}$ values at Tj = 125°C for most devices were extrapolated from the typical operating curves supplied by the manufacturers and are approximations only.

Two MOSFETs in Parallel

We recommend two MOSFETs used in parallel instead of a single MOSFET. The following significant advantages are realized using two MOSFETs in parallel:

- **Significant reduction of power dissipation**.

  Maximum current of 14A with one MOSFET:

  $P_{MOSFET} = (I^2 R_{DS,ON})(\text{Duty Cycle}) = (14)^2(0.050*)(3.3+0.4)/(5+0.4-0.35) = 7.2\ W$

  With two MOSFETs in parallel:

  $P_{MOSFET} = (I^2 R_{DS,ON})(\text{Duty Cycle}) = (14/2)^2(0.037*)(3.3+0.4)/(5+0.4-0.35) = 1.3W/FET$

  * **Note:** $R_{DS,ON}$ increases with temperature. Assume $R_{DS,ON}$ = 25mΩ at 25°C. $R_{DS,ON}$ can easily increase to 50mΩ at high temperature when using a single MOSFET. When using two MOSFETs in parallel, the temperature effects should not cause the $R_{DS,ON}$ to rise above the listed maximum value of 37mΩ.

- **No added heat sink required.**

  With the power dissipation down to around one watt and with MOSFETs mounted flat on the motherboard, no external heat sink is required. The junction-to-case thermal resistance for the MOSFET package (TO-220) is typically at 2°C/W and the motherboard serves as an excellent heat sink.

- **Higher current capability.**

  With thermal management under control, this on-board DC-DC converter can deliver load currents up to 14.5A with no performance or reliability concerns.

MOSFET Gate Bias

The MOSFET(s) can be biased using one of two methods: Charge Pump or 12V Gate Bias.

Charge Pump (or Bootstrap)

Figure 6 employs a charge pump to provide the MOSFET gate bias. The charge pump capacitor, CP, is used as a flying capacitor to boost the voltage of the RC5040 or RC5042 output driver. When the MOSFET switches off, the source of the MOSFET is at -0.6V. VCCQP is charged through the Schottky diode to 4.5V. Thus, the capacitor CP is charged to 5V. When the MOSFET turns on, the source of the MOSFET is at approximately 5V. The capacitor voltage follows, and hence provides a voltage at VCCQP equal to 10V. The Schottky is required to provide the charge path when the MOSFET is off, and then reverses bias when the VCCQP goes to 10V. The capacitor CP needs to be a high Q and high frequency capacitor. A 1µF ceramic capacitor is recommended here.

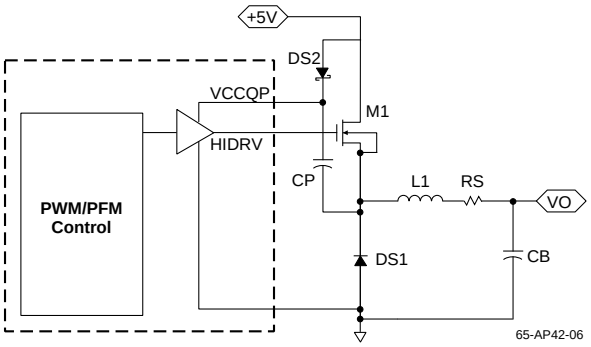

Figure 6. Charge Pump Configuration

12V Gate Bias

Figure 7 illustrates how an external 12V source can be used to bias VCCQP. A 47 Ω resistor is used to limit the transient current into the VCCQP pin, and a 1µF capacitor filter is used to filter the VCCQP supply. This method provides a higher gate bias voltage (V_{GS}) to the MOSFET, and therefore reduces the $R_{DS,ON}$ and resulting power loss within the MOSFET. Figure 8 illustrates how $R_{DS,ON}$ decreases dramatically as V_{GS} increases. A 6.2V Zener (DS2) is used to clamp the voltage at V_{CCQP} to a maximum of 12V and ensure that the absolute maximum voltage of the IC is not exceeded.

Warning: The 12V Gate Bias method applies only to the RC5042. The RC5040 has not been designed to accept an external 12V gate bias voltage, and may be damaged if this method is used.

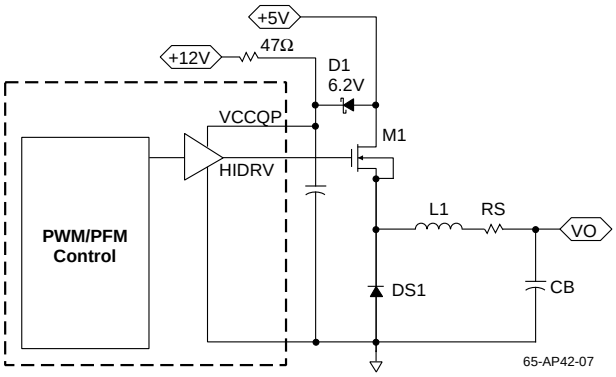

Figure 7. 12V Gate Bias Configuration

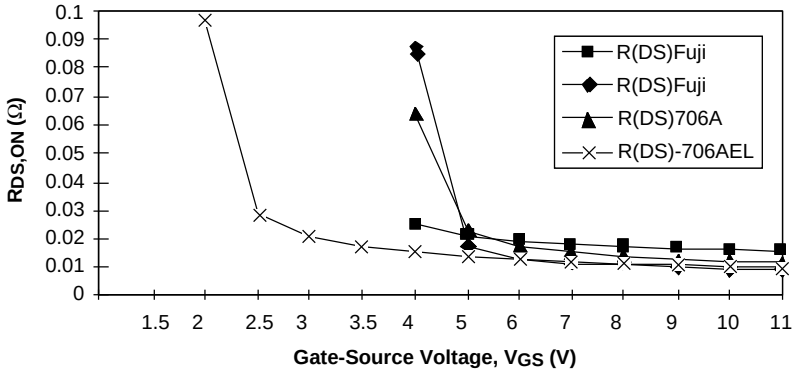

Figure 8. $R_{DS,ON}$ vs. V_{GS} for Selected MOSFETs

Converter Efficiency

Losses due to parasitic resistance in the switches, inductor, and sense resistor dominate at high load-current levels. The major loss mechanisms under heavy loads, in order of importance, are:

- MOSFET I^2R Losses
- Inductor Losses
- Sense Resistor Losses
- Gate-Charge Losses
- Diode-Conduction Losses
- Transition Losses
- Input Capacitor Losses
- Losses Due to the Operating Supply Current of the IC.

Efficiency of the converter under heavy loads can be calculated as follows:

$$\text{Efficiency} = \frac{P_{OUT}}{p_{IN}} = \frac{I_{OUT} \times V_{OUT}}{I_{OUT} \times V_{OUT} + P_{LOSS}},$$

where $P_{LOSS} = PD_{MOSFET} + PD_{INDUCTOR} + PD_{RSENSE} + PD_{GATE} + PD_{DIODE} + PD_{TRAN} + PD_{CAP} + PD_{IC}$

Design Equations:

(1) $PD_{MOSFET} = I_{OUT}^2 \times R_{DS,ON} \times \text{DutyCycle}$, where $\text{DutyCycle} = \frac{V_{OUT} + V_D}{V_{IN} + V_D - V_{SW}}$

(2) $PD_{INDUCTOR} = I_{OUT}^2 \times R_{INDUCTOR}$

(3) $PD_{RSENSE} = I_{OUT}^2 \times R_{SENSE}$

(4) $PD_{GATE} = q_{GATE} \times f \times 5V$, where q_{GATE} is the gate charge and f is the switching frequency

(5) $PD_{DIODE} = V_f \times I_D(1 - \text{DutyCycle})$

(6) $PD_{TRAN} = \frac{V_{IN}^2 \times C_{RSS} \times I_{LOAD} \times f}{I_{DRIVE}}$, where C_{RSS} is the reverse transfer capacitance of the high-side MOSFET.

(7) $PD_{CAP} = I_{RMS}^2 \times ESR$

(8) $PD_{IC} = V_{CC} \times I_{CC}$

Example:

$$\text{DutyCycle} = \frac{3.3 + 0.5}{5 + 0.5 - 0.3} = 0.73$$

$$PD_{MOSFET} = 10^2 \times 0.030 \times 0.73 = 2.19W$$

$$PD_{INDUCTOR} = 10^2 \times 0.010 = 1W$$

$$PD_{RSENSE} = 10^2 \times 0.0065 = 0.65W$$

$$PD_{GATE} = CV \times f \times 5V = 1.75nf \times (9 - 1)V \times 650Khz \times 5V = 0.045W$$

$$PD_{DIODE} = 0.5 \times 10(1 - 0.73) = 1.35W$$

$$PD_{TRAN} = \frac{5^2 \times 400pf \times 10 \times 650khz}{0.7A} \sim 0.010W$$

$$PD_{CAP} = (7.5 - 2.5)^2 \times 0.015 = 0.37W$$

$$PD_{IC} = 0.2W$$

$$PD_{LOSS} = 2.19W + 1.0W + 0.65W + 0.045W + 1.35W + 0.010W + 0.37W + 0.2W = 5.815W$$

$$\therefore \text{ Efficiency} = \frac{3.3 \times 10}{3.3 \times 10 + 5.815} \approx 85\%$$

Selecting the Inductor

Selecting the right inductor component is critical in the DC-DC converter application. The inductor's critical parameters to consider are inductance (L), maximum DC current (I_O), and coil resistance (R_l).

The inductor core material is crucial in determining the amount of current it can withstand. As with all engineering designs, tradeoffs exist between various types of core materials. In general, Ferrites are popular due to their low cost, low EMI properties, and high frequency (>500KHz) characteristics. Molypermalloy powder (MPP) materials exhibit good saturation characteristics, low EMI, and low hysteresis losses; however, they tend to be expensive and more effectively utilized at operating frequencies below 400KHz.

Another critical parameter is the DC winding resistance of the inductor. This value should typically be as low as possible because the power loss in DC resistance degrades the efficiency of the converter by $P_{LOSS} = I_O^2 \times R_l$. The value of the inductor is a function of the oscillator duty cycle (T_{ON}) and the maximum inductor current (I_{PK}). I_{PK} can be calculated from the relationship:

$$I_{PK} = I_{MIN} + \left(\frac{V_{IN} - V_{SW} - V_D}{L}\right)T_{ON}$$

Where T_{ON} is the maximum duty cycle and V_D is the forward voltage of diode DS1.

The inductor value can be calculated using the following relationship:

$$L = \left(\frac{V_{IN} - V_{SW} - V_O}{I_{PK} - I_{MIN}}\right)T_{ON}$$

Where V_{SW} ($R_{DS,ON} \times I_O$) is the drain-to-source voltage of M1 when it is turned on.

Implementing Short Circuit Protection

Intel currently requires all power supply manufacturers to provide continuous protection against short circuit conditions that may damage the CPU. To address this requirement, Raytheon Electronics has implemented a current sense methodology on the RC5040 and RC5042 controllers. This methodology limits the power delivered to the load during an overcurrent condition. The voltage drop created by the output current flowing across a sense resistor is presented to one terminal of an internal comparator with hysterisis. The other comparator terminal has a threshold voltage, nominally 120mV. Table 6 states the limits for the comparator threshold of the switching regulator:

Table 6. RC5040 and RC5042 Short Circuit Comparator Threshold Voltage

	Short Circuit Comparator $V_{threshold}$ (mV)
Typical	120
Minimum	100
Maximum	140

When designing the external current sense circuitry, pay careful attention to the output limitations during normal operation and during a fault condition. If the short circuit protection threshold current is set too low, the converter may not be able to continuously deliver the maximum CPU load current. If the threshold level is too high, the output driver may not be disabled at a safe limit and the resulting power dissipation within the MOSFET(s) may rise to destructive levels.

The design equation used to set the short circuit threshold limit is as follows:

$$R_{SENSE} = \frac{V_{th}}{I_{SC}}, \text{ where: } I_{SC} = \text{output short circuit current}$$

$$I_{SC} \geq I_{inductor} = I_{Load,\,max} + \frac{(I_{pk} - I_{min})}{2}$$

where I_{pk} and I_{min} are peak ripple currents and $I_{load,\,max}$ is the maximum output load current.

You must also take into account the current ($I_{pk} - I_{min}$), or the ripple current flowing through the inductor under normal operation. Figure 9 illustrates the inductor current waveform for the RC5040 and RC5042 DC-DC converters at maximum load.

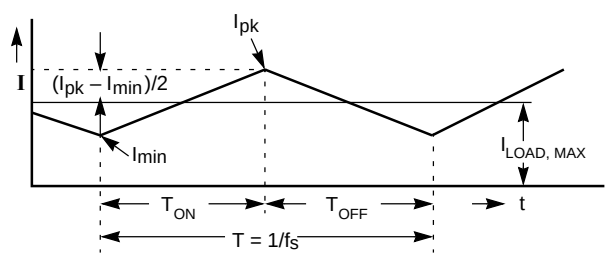

Figure 9. Typical DC-DC Converter Inductor Current Waveform

The calculation of this ripple current is as follows:

$$\frac{(I_{pk} - I_{min})}{2} = \frac{(V_{IN} - V_{SW} - V_{OUT})}{L} \times \frac{(V_{OUT} + V_D)}{(V_{IN} - V_{SW} + V_D)}T$$

where:

- V_{IN} = Input Voltage to the Converter
- V_{SW} = Voltage Across the MOSFET = $I_{LOAD} \times R_{DS,ON}$
- V_D = Forward Voltage of the Schottky Diode
- T = The Switching Period of the Converter = 1/fs, Where f_S = Switching Frequency.

For an input voltage of 5V, an output voltage of 3.3V, an inductor value of 1.3µH, and a switching frequency of 650KHz (using C_{EXT} = 39pF), the inductor current can be calculated as follows:

$$\frac{(I_{pk} - I_{min})}{2} = \frac{(5.0 - 14.5 \times 0.037 - 3.3)}{1.3 \times 10^{-6}} \times$$

$$\frac{(3.3 + 0.5)}{(5.0 - 14.5 \times 0.037 + 0.5)} \times \frac{1}{650 \times 10^{3}} = 1.048\text{A}$$

Therefore, for a continued load current of 14.5A, the peak current through the inductor, I_{pk}, is found to be:

$$I_{SC} \geq I_{inductor} = I_{Load,\,max} + \frac{(I_{PK} - I_{min})}{2} = 14.5 + 1 = 15.5\text{A}$$

For continuous operation at 14.5A, the short circuit detection threshold must be at least 15.5A.

The next step is to determine the value of the sense resistor. Including tolerance, the sense resistor value can be approximated as follows:

$$R_{SENSE} = \frac{V_{th,min}}{I_{SC}} \times (1 - TF) = \frac{V_{th,min}}{1.0 + I_{Load,max}} \times (1 - TF)$$

where TF = Tolerance Factor for the sense resistor.

Several different types of sense resistors exist. Table 7 describes tolerance, size, power capability, temperature coefficient and cost of various sense resistors.

Table 7. Comparison of Sense Resistors

Description	Motherboard Trace Resistor	Discrete Iron Alloy Resistor (IRC)	Discrete Metal Strip Surface Mount Resistor (Dale)	Discrete MnCu Alloy Wire Resistor	Discrete CuNi Alloy Wire Resistor (Copel)
Tolerance Factor (TF)	±29%	±5% (±1% available)	±1%	±10%	±10%
Size (L x W x H)	2" x 0.2" x 0.001" (1 oz Cu trace)	0.45" x 0.065" x 0.200"	0.25" x 0.125" x 0.025"	0.200" x 0.04" x 0.160"	0.200" x 0.04" x 0.100"
Power capability	> 50A/in	1 watt (3W and 5W available)	1 watt	1 watt	1 watt
Temperature Coefficient	+4,000 ppm	+30 ppm	±75 ppm	±30 ppm	±20 ppm
Cost @10,000 piece	Low included in motherboard	$0.31	$0.47	$0.09	$0.09

Refer to Appendix A for Directory of component suppliers

Based on the Tolerance in the above table, for embedded PC trace resistor and for $I_{load,max}$ = 14.5A:

$$R_{SENSE} = \frac{V_{th,min}}{1.0\text{A} + I_{Load,\,max}} \times (1 - TF) =$$

$$\frac{100\text{mV}}{1.0\text{A} + 14.5\text{A}} \times (1 - 29\%) = 4.6\text{m}\Omega$$

For a discrete resistor and $I_{load,\,max}$ = 14.5A:

$$R_{SENSE} = \frac{V_{th,min}}{1.0\text{A} + I_{Load,\,max}} \times (1 - TF) =$$

$$\frac{100\text{mV}}{1.0\text{A} + 14.5\text{A}} \times (1 - 5\%) = 6.1\text{m}\Omega$$

For user convenience, Table 8 lists the recommended values for sense resistor at various load currents using an embedded PC trace resistor or discrete resistor.

Table 8. R_{sense} for various load currents

$I_{Load,max}$ (A)	R_{SENSE} PC Trace Resistor (mΩ)	R_{SENSE} Discrete Resistor (mΩ)
10.0	6.5	8.6
11.2	5.8	7.8
12.4	5.3	7.1
13.9	4.8	6.4
14.0	4.7	6.3
14.5	4.6	6.1

Discrete Sense Resistor

Discrete iron alloy resistors come in a variety of tolerances and power ratings, and are ideal for precision implementations. Either an MnCu alloy wire resistor or an CuNi alloy wire resistor is ideal for a low cost implementation.

Embedded Sense Resistor (PC Trace Resistor)

Embedded PC trace resistors have the advantage of almost zero cost implementation. However, the value of the PC trace resistors have large variations. Embedded resistors have 3 major error sources: the sheet resistivity of the inner layer, the mismatch due to L/W, and the temperature variation of the resistor. When laying out embedded sense resistors, consider all error sources described as follows:

- **Sheet resistivity**.
  For 1 ounce copper, the thickness variation is typically between 1.15 mil and 1.35 mil. Therefore, the error due to sheet resistivity is (1.35 – 1.15)/1.25 = 16%.

- **Mismatch due to L/W**.
  The error in L/W is dictated by the geometry and the power dissipation capability of the sense resistor. The sense resistor must be able to handle the load current and, therefore, requires a minimum width, calculated as follows:

  $$W = \frac{I_L}{0.05}$$

  where W is the minimum width required for proper power dissipation (mils), and I_L is the load current in Amps.

  For a load current of 15A, the minimum width required is 300mils, which reflects a 1% L/W error.

- **Thermal Considerations**.
  The I^2R power losses cause the surface temperature of the resistor to increase along with its resistance value. In addition, ambient temperature variations add the change in resistor value:

  $$R = R_{20}[1 + \alpha_{20}(T - 20)]$$

  where R_{20} is the resistance at 20°C, α_{20} = 0.00393/ °C,T is the operating temperature, andR is the desired value.

  For temperature T = 50°C, the %R change = 12%.

Table 9 is a summary of tolerances for the Embedded PC Trace Resistor.

Table 9. Summary PC Trace Resistor Tolerance

Tolerance due to sheet resistivity variation	16%
Tolerance due to L/W error	1%
Tolerance due to temperature variation	12%
Total Tolerance for PC Trace Resistor	29%

Design rules for using an embedded resistor

The basic equation for laying an embedded resistor is:

$$R = \rho \times \frac{L}{W \times t}$$

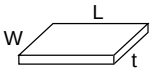

where ρ is the Resistivity (W-mil), L is the Length (mils), W is the Width (mils), and t is the Thickness (mils).

For 1oz copper, t = 1.35 mils, ρ = 717.86 μΩ-mil,
1 L/1 W = 1 Square (□).

For example, you can layout a 5.30mΩ embedded sense resistor. From Equations above,

$$W = \frac{I_L}{0.05} = \frac{10}{0.05} = 200\text{mil}$$

$$L = \frac{R \times W \times t}{\rho} = \frac{0.00530 \times 200 \times 1.35}{717.86} = 2000\text{mi}$$

L/W = 10 □.

Therefore, to model 5.30mΩ enbedded resistor, you need W = 200 mils, and L = 2000 mils. See Figure 10.

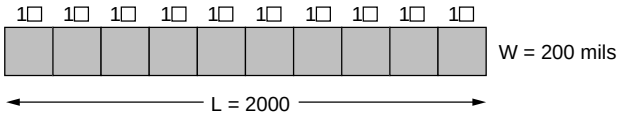

Figure 10. 5.30mΩ Sense Resistor (10 □)

You can also implement the sense resistor in the following manner. Each corner square is counted as 0.6 square since the current flowing through the corner square does not flow uniformly, concentrated towards the inside edge. This is shown in Figure 11.

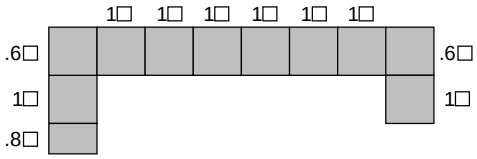

Figure 11. 5.30mΩ Sense Resistor (10 □)

A Resign Example Combining an Embedded Resistor with a Discrete Resistor

For low cost implementation, the embedded PC trace resistor is the most desirable alternative, but, as discussed earlier, the wide tolerance (±29%) presents a challenge. In addition, changing CPU requirements may force the maximum load

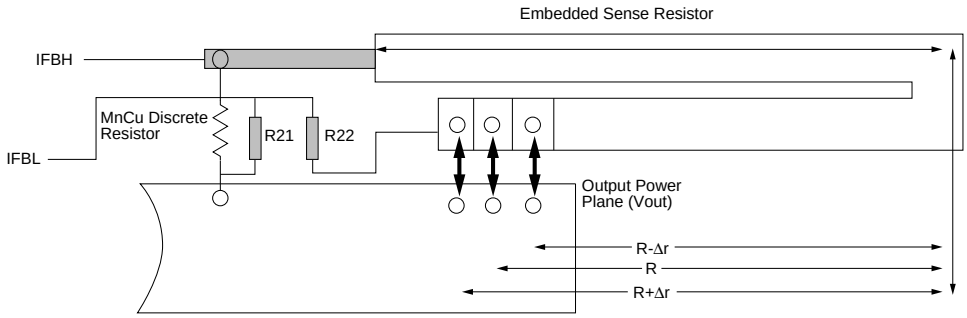

Figure 12. Short Circuit Sense Resistor Design Using PC Trace Resistor and Optional Discrete Sense Resistor

currents to change. Therefore, combining an embedded resistor with a discrete resistor may be a desirable option. This section discusses a design that provides flexibility and addresses wide tolerances. Refer to Figure 12.

In this design, the user has the option to choose either an embedded or a discrete MnCu sense resistor. To use the discrete sense resistor, populate R21 with a shorting bar (zero Ohm resistor) for a proper Kelvin connection and add the MnCu sense resistor. To use the embedded sense resistor, populate R22 with a shorting bar for a Kelvin connection. The embedded sense resistor allows you to choose a plus or a minus delta resistance tap to offset any large sheet resistivity change.

In this design, the center tap yields 6mΩ, and the left or the right tap yield 6.7 or 5.3 mΩ, respectively.

RC5040 and RC5042 Short Circuit Current Characteristics

The RC5040 and RC5042 have a short circuit current characteristic that includes a hysteresis function. This function prevents the DC-DC converter from oscillating in the event of a short circuit. Figure 13 shows the typical characteristic of the DC-DC converter using a 6.5 mΩ sense resistor.

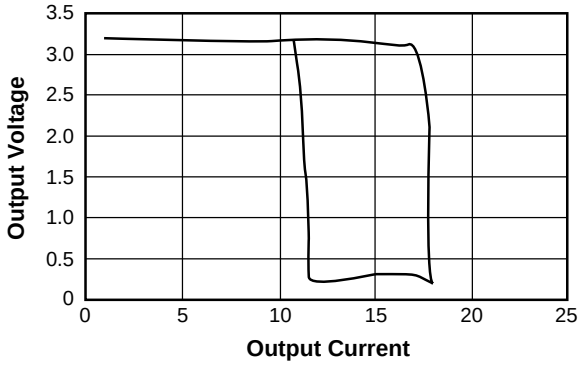

Figure 13. RC5040/RC5042 Short Circuit Characteristic

The converter exhibits at normal load regulation until the voltage across the resistor reaches the internal short circuit threshold of 120mV. At this point, the internal comparator trips and signals the controller to turn off the gate drive to the power MOSFET. This causes a drastic reduction in the output voltage as the load regulation collapses into the short circuit control mode. The output voltage does not return to its nominal value until the output short circuit current is reduced to within the safe range for the DC-DC converter.

Power Dissipation Consideration During a Short Circuit Condition

The RC5040 and RC5042 controllers respond to an output short circuit by drastically changing the duty cycle of the gate drive signal to the power MOSFET. In doing this, the power MOSFET is protected from over-stress and eventual destruction. Figure 14A shows the gate drive signal of a typical RC5040 operating in continuous mode with a load current of 10A. The duty cycle is then set by the ratio of the input voltage to the output voltage. If the input voltage is 5V and the output voltage is 3.1V, the ratio of Vout/ Vin is 62%. Figure 14B shows the result of the RC5040 going into its short circuit mode when the duty cycle is around 20%. Calculating the power on the MOSFET at each condition on the graph in Figure 13 shows how the protection scheme works. The power dissipated in the MOSFET at normal operation for a load current of 14.5A, is given by:

$$P_D = I^2 \times R_{ON} \times DutyCycle = \left(\frac{14.5}{2}\right)^2 \times .037 \times .62 = 1.2W$$

for each MOSFET.

The power dissipated in the MOSFET at short circuit condition for a peak short current of 20A, is given by:

$$P_D = \left(\frac{20}{2}\right)^2 \times .037 \times .2 = 0.74W$$

for each MOSFET.

Thus, the MOSFET is not being over-stressed during a short circuit condition.

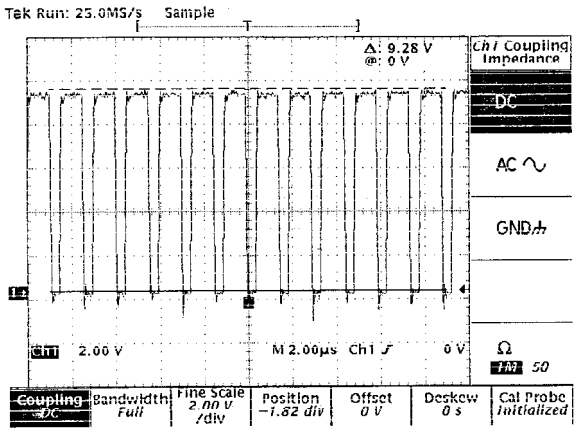

Figure 14A. V_{CCQP} Output Waveform for Normal Operation Condition with V_{out} = 3.3V@10A

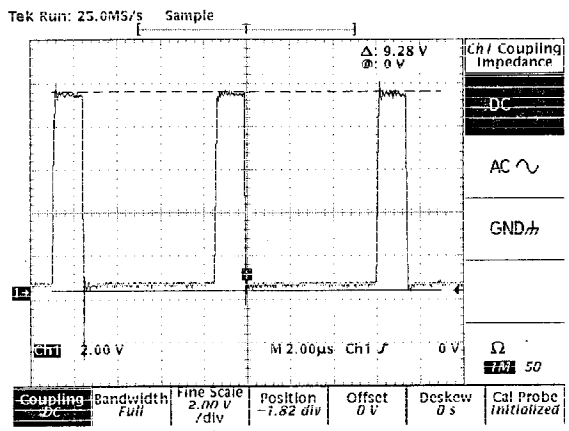

Figure 14B. V_{CCQP} Output Waveform for Output Shorted to Ground

The Schottky diode has a power dissipation consideration during the short circuit condition. During normal operation, the diode dissipates power when the power MOSFET is off. The power dissipation is given by:

$$P_{D,\,Diode} = I_F \times V_F \times (1 - DutyCycle) =$$

$$14.5 \times 0.5V \times (1 - 0.62) = 2.75W$$

In short circuit mode, the duty cycle is dramatically reduced to approximately 20%. The forward current during a short circuit condition decays exponentially through the inductor. The power dissipated on the diode during the short circuit condition, is approximated by:

$$I_{F,\,ending} = I_{sc} \times e^{-\frac{1}{L/R}} = 20A \times e^{-\frac{1.5us}{1.3us}} \approx 7.9A$$

$$I_{F,\,ave} \approx (20A + 7.9A)/2 \approx 14A$$

$$P_{D,\,Diode} = I_{F,\,ave} \times V_F \times (1 - DutyCycle) =$$

$$14 \times 0.45 \times 0.8 \approx 5W$$

Thus for the Schottky diode, the thermal dissipation during a short circuit is greatly magnified and requires that the thermal dissipation of the diode be properly managed by the appropriate choice of a heat sink. In order to protect the Schottky from being destroyed in the event of a short, we should limit the junction temperature to less than 130°C. Using the equation for maximum junction temperature, we can arrive at the thermal resistance required below:

$$P_D = \frac{T_{J(max)} - T_A}{R_{\Theta JA}}$$

Assuming that the ambient temperature is 50°C, we get:

$$R_{\Theta JA} = \frac{T_{J(max)} - T_A}{P_D} = \frac{130 - 50}{5} = 16°C/W$$

Thus we need to provide for a heat sink that will give the Schottky diode a thermal resistance of at least 16°C/W or lower in order to protect the device during an indefinite short.

In summary, with proper heat sink, the Schottky diode is not being over stressed during a short circuit condition.

Schottky Diode Selection

The application circuits of Figures 3, 4, and 5 show two Schottky diodes, DS1 and DS2. In synchronous mode, DS1 is used in parallel with M3 to prevent the lossy diode in the FET from turning on. In non-synchronous mode, DS1 is used as a flyback diode to provide a constant current path for the inductor when M1 is turned off.

The Schottky diode DS2 serves a dual purpose. As configured in Figures 3, 4, and 5, DS2 allows the VCCQP pin on the RC5040 to be bootstrapped up to 9V using capacitor C12. When the lower MOSFET M3 is turned on, one side of capacitor C12 is connected to ground while the other side of the capacitor is being charged up to voltage VIN – VD through DS2. The voltage that is then applied to the gate of the MOSFET is VCCQP – VSAT, or typically around 9V. DS2 also provides correct sequencing of the various supply voltages by assuring that VCCQP is not enabled before the other supplies.

A vital selection criteria for DS1 and DS2 is that they exhibit a very low forward voltage drop, as this parameter can directly affect the regulator efficiency. Table 10 lists several suitable Schottky diodes. Note that the MBR2015CTL has a very low forward voltage drop. This diode is ideal for applications where output voltages less than 2.8V are required.

Table 10. Schottky Diode Selection Table

Manufacturer Model #	Conditions	Forward Voltage V_F
Philips PBYR1035	I_F = 20A; T_j=25°C I_F = 20A; T_j=125°C	< 0.84v < 0.72v
Motorola MBR2035CT	I_F = 20A; T_j=25°C I_F = 20A; T_j=125°C	< 0.84v < 0.72v
Motorola MBR1545CT	I_F = 15A; T_j=25°C I_F = 15A; T_j=125°C	< 0.84v < 0.72v
Motorola MBR2015CTL	I_F = 20A; T_j=25°C I_F = 20A; T_j=150°C	< 0.58v < 0.48v

Output Filter Capacitors

Output ripple performance and transient response are functions of the filter capacitors. Since the 5V supply of a PC motherboard may be located several inches away from the DC-DC converter, the input capacitance can play an important role in the load transient response of the RC5040.
The higher the input capacitance, the more charge storage is available for improving the current transfer through the FET(s). Capacitors with low Equivalent Series Resistance (ESR) are best for this type of application and can influence the converter's efficiency if not chosen carefully. The input capacitor should be placed as close to the drain of the FET as possible to reduce the effect of ringing caused by long trace lengths.

ESR is the resonant impedance of the capacitor, and it is difficult to quantify. Since the capacitor is actually a complex impedance device having resistance, inductance, and capacitance, it is natural for it to have a resonant frequency. As a rule, the lower the ESR, the better suited the capacitor is for use in switching power supply applications. Many manufacturers do not supply ESR data, but a useful estimate can be obtained using the following equation:

$$ESR = \frac{DF}{2\pi fC}$$

where DF is the dissipation factor of the capacitor, f is the operating frequency, and C is the capacitance in farads.

With this in mind, correct calculation of the output capacitance is crucial to the performance of the DC-DC converter. The output capacitor determines the overall loop stability, output voltage ripple, and load transient response. The calculation is as follows:

$$C(\mu F) = \frac{I_O \times \Delta T}{\Delta V - I_O \times ESR}$$

where ΔV is the maximum voltage deviation due to load transients, ΔT is the reaction time of the power source, and I_O is the output load current. ΔV is the loop response time of the RC5040 and RC5042, approximately 8µs.

For I_O = 10A and ΔV = 165mV, the bulk capacitance required can be approximated as follows:

$$C(\mu F) = \frac{I_O \times \Delta T}{\Delta V - I_O \times ESR} = \frac{10A \times 8\mu s}{165mV - 10A \times 11m\Omega} = 1454\mu F$$

Input filter

The DC-DC converter design should include an input inductor between the system +5V supply and the converter input as described below. This inductor will serve to isolate the +5V supply from noise occurring in the switching portion of the DC-DC converter and also to limit the inrush current into the input capacitors during power up. An inductor value of around 2.5µH is recommended, as illustrated in Figure 15.

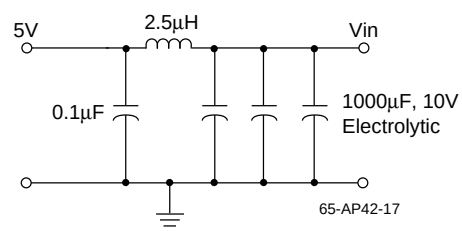

Figure 15. Input Filter

Bill of Materials

The Bill of Materials for the application circuits of Figures 2 through 4 is presented in Table 11.

Table 11. Bill of Materials for a 14.5A Pentium Pro Motherboard Application

C4, C5, C7, C8, C9, C10	Panasonic ECU-V1H104ZFX	0.1µF 50V capacitor	
C6	Panasonic ECSH1CY475R	4.7µF 16V capacitor	
Cext	Panasonic ECU-V1H121JCG	39pF capacitor	
C12			
C1, C2, C3	United Chemicon LXF16VB102M	1000µF 6.3V electrolytic capacitor 10mm x 20mm	ESR<0.047Ω
C11	Panasonic ECU-V1H224ZFX	0.22µF 50V capacitor	

Table 11. Bill of Materials for a 14.5A Pentium Pro Motherboard Application

C13, C14, C15	Sanyo 6MV1500GX	1500µF 6.3V electrolytic capacitor 10mm x 20mm	ESR < 0.047 Ω
DS1 (note 1)	Motorola MBR1545CT	Shottky Diode	Vf<0.72V @ If = 15A
DS2	General Instruments 1N5817	Schottky Diode	1A, 20V
L1	Skynet 320-8107	1.3µH inductor	
L2*	Skynet 320-6110	2.5µH inductor	*Optional – will help reduce ripple on 5v line
M1, M2, M3 (note 2)	Fuji 2SK1388	N-Channel Logic Level Enhancement Mode MOSFET	$R_{DS(ON)}$ < 37m ohm V_{GS} < 4V, I_D > 20A
Rsense	COPEL A.W.G. #18	6 milliohm CuNi Alloy Wire resistor	
R1, R2, R3, R4, R6, R7	Panasonic ERJ-6ENF10.0KV	10K 5% Resistors	
U1	Raytheon RC5042M or RC5040M	DC-DC Converter for Pentium Pro	

Refer to Appendix A for Directory of component suppliers.

Notes:

1. In synchronous mode using the RC5040, a 1A schottky diode (1N5817) may be substituted for the MBR1545CT.
2. MOSFET M3 is only required for the RC5040 synchronous application.

PCB Layout Guidelines and Considerations

PCB Layout Guidelines

- Placement of the MOSFETs relative to the RC5040 is critical. The MOSFETs (M1 & M2), should be placed such that the trace length of the HIDRV pin to the FET gate is minimized. A long lead length causes high amounts of ringing due to the inductance of the trace and the large gate capacitance of the FET. This noise radiates all over the board, and because it is switching at a high voltage and frequency, it is very difficult to suppress.

  Figure 16 shows an example of proper MOSFET placement in relation to the RC5040. It also shows an example of problematic placement for the MOSFETs.

  In general, noisy switching lines should be kept away from the quiet analog section of the RC5040. That is, traces that connect to pins 12 and 13 (HIDRV and VCCQP) should be kept far away from the traces that connect to pins 1 through 5, and pin 16.

- Place the 0.1µF decoupling capacitors as close to the RC5040 and RC5042 pins as possible. Extra lead length negates their ability to suppress noise.

- Each VCC and GND pin should have its own via to the appropriate plane on the board to add isolation between pins

- The CEXT timing capacitor should be surrounded with a ground trace. The placement of a ground or power plane underneath the capacitor provides further noise isolation, and helps to shield the oscillator from the noise on the PCB. This capacitor should be placed as close to pin 1 as possible.

- Group the MOSFETs, inductor, and Schottky diode as close together as possible. This minimizes ringing derived from the inductance of the trace and the large gate capacitance of the FET. Place the input bulk capacitors as close to the drains of MOSFETs as possible. In addition, place the 0.1µF decoupling capacitors right on the drain of each MOSFET. This helps to suppress some of the high frequency switching noise on the DC-DC converter input.

- The traces that run from the RC5040 IFB (pin 4) and VFB (pin 5) pins should be run next to each other and be Kelvin connected to the sense resistor. Running these lines together helps to reject some of the common mode noise to the RC5040 feedback input. Run the noisy switching signals (HIDRV & VCCQP) on one layer, and use the inner layers for power and ground only. If the top layer is being used to route all of the noisy switching signals, use the bottom layer to route the analog sensing signals VFB and IFB.

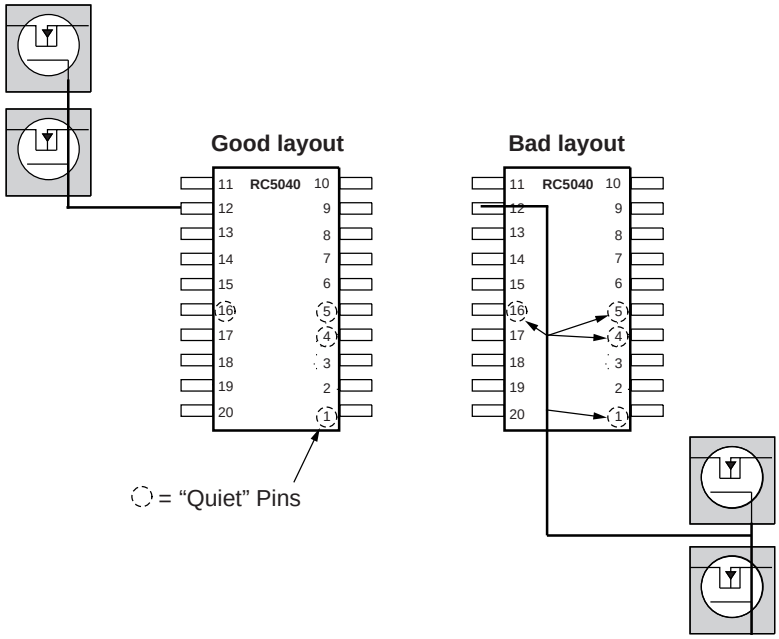

Figure 16. Example of Proper MOSFETs Placements

PC Motherboard Layout and Gerber File

A reference design for motherboard implementation of the RC5040 and RC5042 along with the Layout Gerber File and Silk Screen are presented below. The actual PCAD Gerber File can be obtained from Raytheon Electronics Semiconductor Division's Marketing Department at (415) 966-7819.

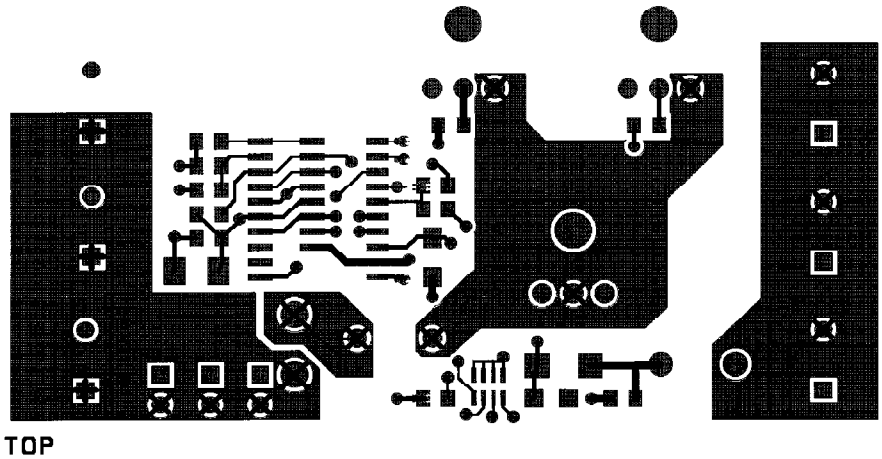

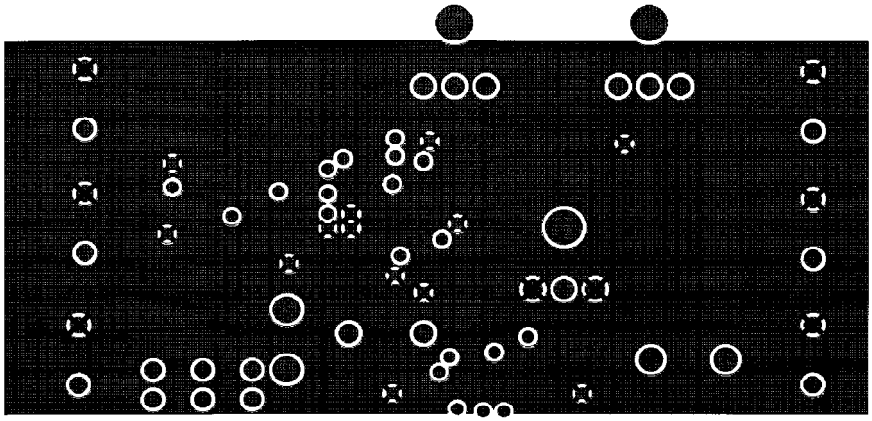

GND

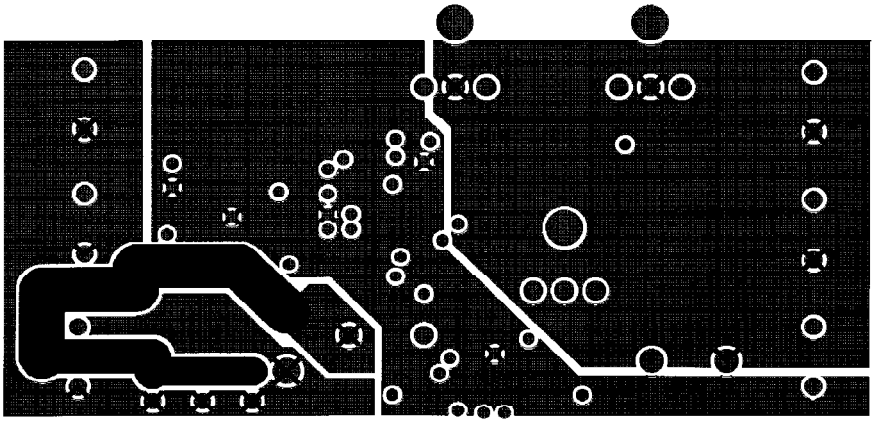

POWER

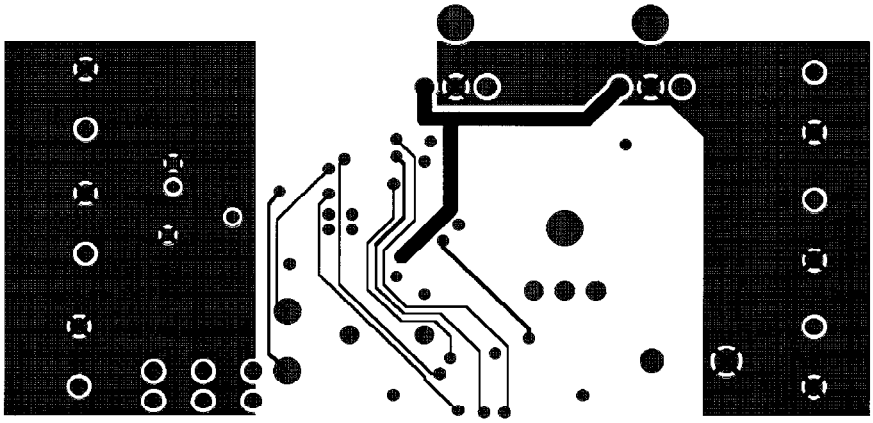

MOTTOB

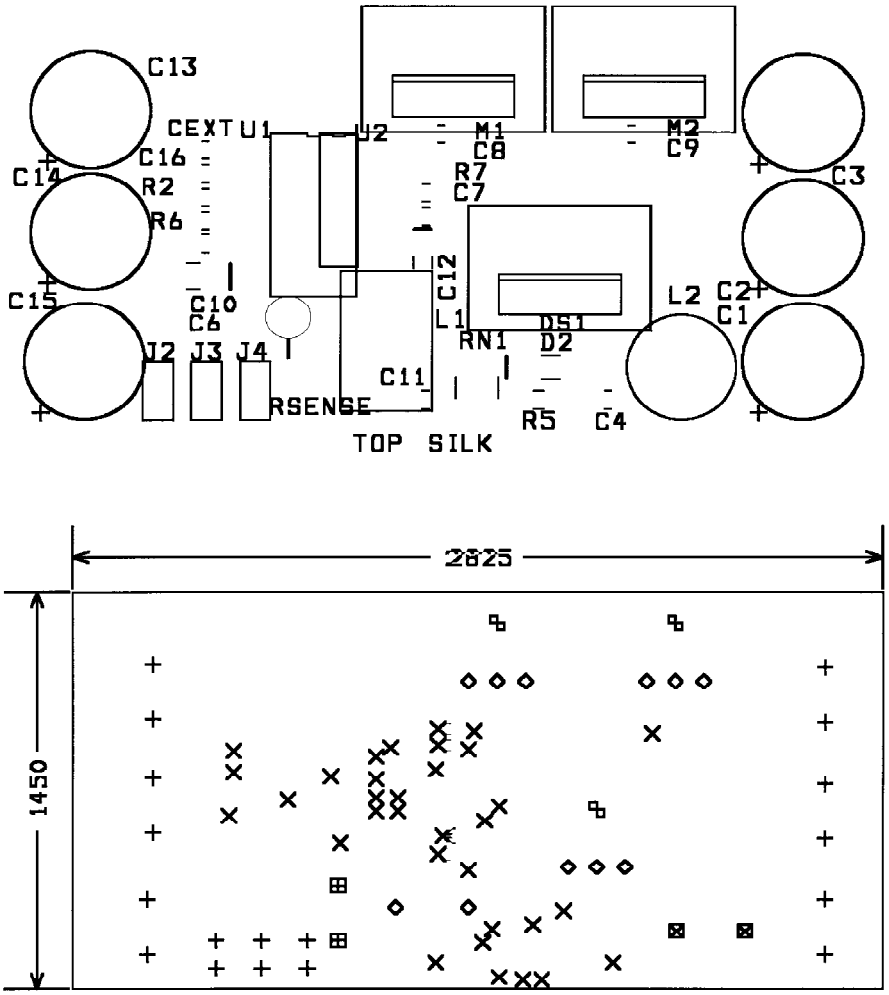

Guidelines for Debugging and Performance Evaluations

Debugging Your First Design Implementation

Use the following procedure to help you debug your design implementation:

1. Note the VID pins settings. They tell you what voltage is to be expected.

2. Do not connect any load to the circuit. While monitoring the output voltage, apply power to the part with current limiting at the power supply. Do this to make sure that no catastrophic shorts occur.

3. If proper voltage is not achieved, follow the procedures in the *Troubleshooting* section.

4. After there is proper voltage, increase the current limiting of the power supply to 16A.

5. Apply load at 1A increments; an active load (HP6060B or equivalent) is suggested.

6. In case of poor regulation, refer to the procedures in the *Troubleshooting* section.

Troubleshooting

1. If no voltage is registered at the output and the circuit is not drawing current, look for openings in the connections. Check the circuitry versus the schematic, and the power supply pins at the device to ascertain that voltage(s) had been applied.

2. If no voltage is registered at the output and the circuit is drawing excessive current (>100mA) with no load, check for possible shorts. Trace the path of the excessive current to determine if the controller is at fault or if the excessive current is due to peripheral components.

3. If the output voltage comes near to, but is not, what is expected, check the VID inputs at the device pins. The part is factory set to correspond to the VID inputs.

4. Premature shut down can be caused by an inappropriate value of sense resistor. See the *Sense Resistor* section.

5. A poor load regulation can have many causes. You should first check the voltages and signals at the critical pins.

6. The VREF pin should be at the voltage set by the VID pins. If the power supply pins are correct and the VID pins are correct, the VREF should be at the correct voltage.

7. Next check the oscillator pin. A saw tooth wave at the frequency set by the external capacitor should be seen.

8. When the VREF and CEXT pins are determined to be correct and the output voltage is still incorrect look at the waveform at VCCQP. This pin should be swinging from ground to +12V (in the +12V application) and from slightly below +5V to about +10V (charge pump application). If the VCCQP pin is noisy, with ripples and overshoots, then the noise may cause the converter to function improperly.

9. Next, look at the HIDRV pin. This pin directly drives the gate of the FET. It should provide a gate drive (Vgs) of about 5V when turning the FET on. A careful study of the layout is recommended. See the *PCB Layout Guidelines and Considerations* section.

10. Experience shows that the most frequent errors are using incorrect components, improper connections, and poor layout.

Performance Evaluation

This section shows the results of a random sample evaluation. Use these results as a reference guide for evaluating the RC5040 DC-DC converter for Pentium Pro motherboards.

Load Regulation

VID	I_{load} (A)	V_{out} (V)
0100	0.5	3.0904
	1.0	3.0825
	2.0	3.0786
	3.0	3.0730
	4.0	3.0695
	5.0	3.0693
	6.0	3.0695
	7.0	3.0695
	8.0	3.0694
	9.0	3.0694
	9.9	3.0691
Load Regulation 0.5A – 9.9A		0.70%

VID	I_{load} (A)	V_{out} (V)
0010	0.5	3.2805
	1.0	3.2741
	2.0	3.2701
	3.0	3.2642
	4.0	3.2595
	5.0	3.2597
	6.0	3.2606
	7.0	3.2611
	8.0	3.2613
	9.0	3.2611
	10.0	3.2607
	11.0	3.2599
	12.0	3.2596
	12.4	3.2596
Load Regulation 0.5A – 12.4A		0.64%

VID	I_{load} (A)	V_{out} (V)
1010	0.5	2.505
	1.0	2.504
	2.0	2.501
	3.0	2.496
	4.0	2.493
	5.0	2.493
	6.0	2.492
	7.0	2.492
	8.0	2.491
	9.0	2.490
	10.0	2.489
	11.0	2.488
	12.0	2.486
	13.0	2.485
	13.9	2.484
Load Regulation 0.5 - 13.9A		0.84%

Note:
Load regulation is expected to be typically around 0.8%. The load regulation performance for this device under evaluation is excellent.

Output Voltage Load Transients Due to Load Current Step

This test is performed using Intel P6.0/P6S/P6T Voltage Transient Tester.

Low to High Current Step	0.5A-9.9A	- 76.0mV	Refer to Attachment A for Scope Picture
High to Low Current Step	9.9A-0.5A	+ 70mV	Refer to Attachment B for Scope Picture
Low to High Current Step	0.5A-12.4A	- 97.6mV	Refer to Attachment C for Scope Picture
High to Low Current Step	12.4A-0.5A	+ 80.0mV	Refer to Attachment D for Scope Picture
Low to High Current Step	0.5A-13.9A	- 99.2mV	Refer to Attachment E for Scope Picture
High to Low Current Step	13.9A-0.5A	+ 105.2mV	Refer to Attachment F for Scope Picture

Note:
Excellent transient voltage response. Transient voltage is recommended to be less than 4% of the output voltage. The performance of the device under evaluation is significantly better than a typical VRM.

Input Ripple and Power on Input Rush Current

I_{load} = 9.9A	Input Ripple Voltage = 15mV	Refer to Attachment G for Scope Picture

Power on Input Rush Current is not measured on the motherboard because we did not want to cut the 5V trace and insert current probe in series with the supply. However, with the input filter design, the Input Rush Current will be well within specification.

Component Case Temperature

Device	Description	Case Temperature (°C) I_{load}= 9.9A	Case Temperature (°C) I_{load}= 12.4A	Case Temperature (°C) I_{load} =13.9A
Q3A	MOSFET K1388	57	63	56.3
Q3B	MOSFET K1388	58	64	66.6
L1	Inductor, Unknown	53	56	61.2
Q2	Schottky Diode 2048CT	66	70	87
IC	Raytheon RC5040	52	54	58
Cin	Input Capacitor 1000µF	38.2	36.8	39
Cout	Output Capacitor 1500µF	35	34.8	38.2

Note:
Case temperatures are all within guidelines. Our guideline is that case temperatures for all components should be below 105°C @25°C Ambient.

Comments:
Excellent input ripple voltage. Input ripple voltage is recommended to be less than 5% of the output voltage.

Evaluation Summary:

The on-board DC-DC converter is fully functional. It has excellent load regulation, transient response, and input voltage ripple.

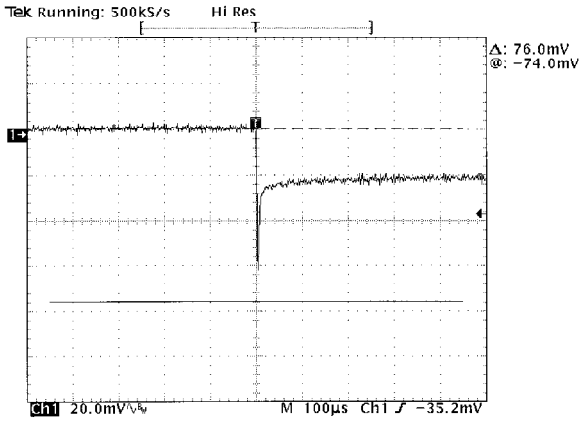

Attachment A

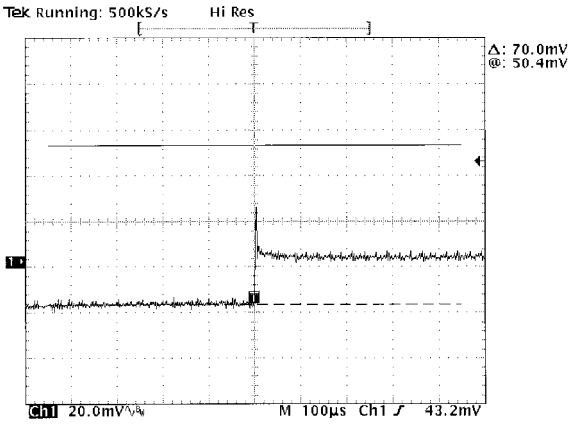

Attachment B

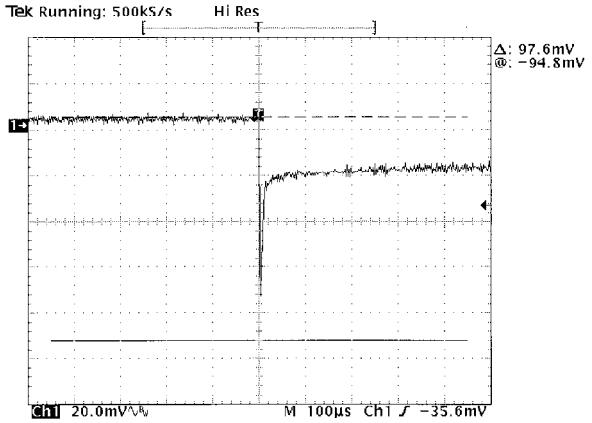

Attachment C

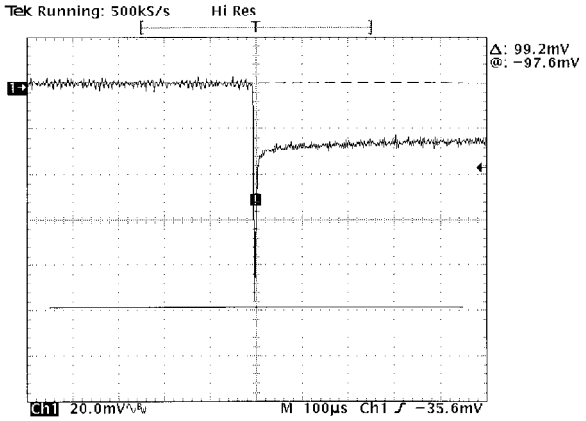

Attachment E

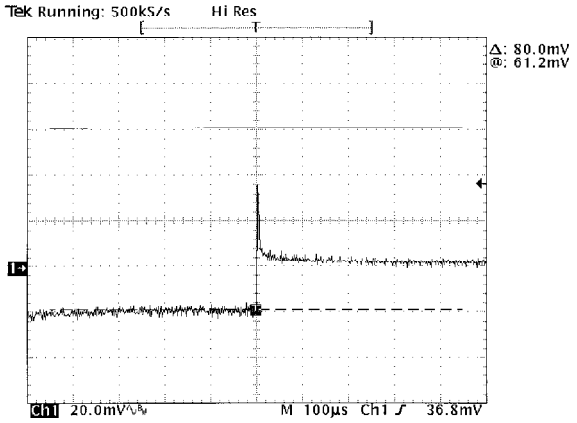

Attachment D

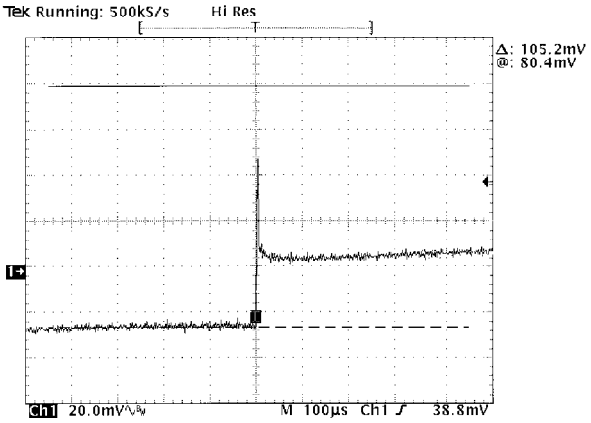

Attachment F

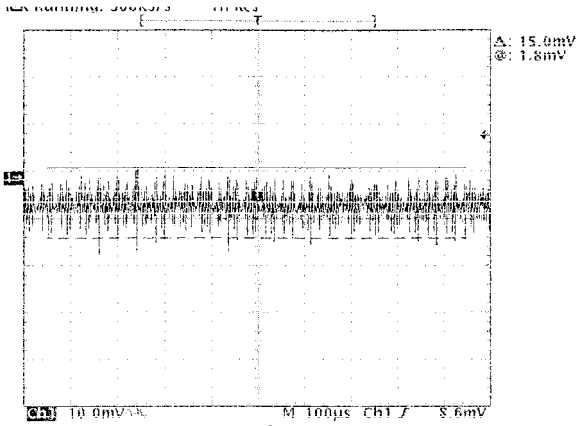

Attachment G

Summary

This application note covers for implementation of a DC-DC converter on a Pentium Pro motherboard using the RC5040 and RC5042. The detailed discussion includes Pentium Pro processor power requirements, RC5040 and RC5042 description, design considerationsn and component selections, layout guidelines and considerations, guidelines for debugging, and performance evaluations.

RC5040/RC5042 Evaluation Board

Raytheon Electronics provides an evaluation board for the purpose of verifying system level performance of the RC5040 and RC5042. The evaluation board serves as a guide as to what can be expected in performance with the supplied external components and PCB layout. Please call Raytheon Electronics Marketing Department at (415) 966-7819 for an evaluation board.

Appendix A: Directory of Component Suppliers

Dale Electronics, Inc.
E. Hwy. 50, PO Box 180
Yankton, SD 57078-0180
PH: (605) 665-9301

Fuji Electric
Collmer Semiconductor Inc.
14368 Proton Rd.
Dallas, Texas 75244
PH: (214)233-1589

General Instrument
Power Semiconductor Division
10 Melville Park Road
Melville, NY 11747
PH: (516) 847-3000

Hoskins Manufacturing Co.
(Copel Resistor Wire)
10776 Hall Road
Hamburg, MI 48139-0218
PH: (313) 231-1900

Intel Corp.
5200 NE Elam Young Pkwy.
Hillsboro, OR. 97123
PH: (800) 843-4481 Tech. Support
for Power Validator

International Rectifier
233 Kansas St.
El Segundo, CA 90245
PH: (310) 322-3331

IRC Inc.
PO Box 1860
Boone, NC 28607
PH: (704) 264-8861

Motorola Semiconductors
PO Box 20912
Phoenix, Arizona 85036
PH:(602) 897-5056

National Semiconductor
2900 Semiconductor Drive
Santa Clara, CA 95052-8090
PH: (800) 272-9959

Nihon Inter Electronics Corp.
Quantum Marketing Int'l, Inc.
12900 Rolling Oaks Rd.
Caliente, CA 93518
PH: (805) 867-2555

Panasonic Industrial Co.
6550 Katella Avenue
Cypress, CA 90630
PH: (714) 373-7366

Pulse Engineering
12220 World Trade Drive
San Diego, CA 92128
PH: (619) 674-8100

Sanyo Energy USA
2001 Sanyo Avenue
San Diego, CA 92173
PH: (619) 661-6620

Siliconix
Temic Semiconductors
2201 Laurelwood Road
Santa Clara, CA 95056-1595
PH: (800) 554-5565

Sumida Electric USA
5999 New Wilke Road Suite #110
Rolling Meadows, IL 60008
PH: (708) 956-0702

Xicon Capacitors
PO Box 170537
Arlington, Texas 76003
PH:(800) 628-0544

LIFE SUPPORT POLICY

FAIRCHILD'S PRODUCTS ARE NOT AUTHORIZED FOR USE AS CRITICAL COMPONENTS IN LIFE SUPPORT DEVICES OR SYSTEMS WITHOUT THE EXPRESS WRITTEN APPROVAL OF THE PRESIDENT OF FAIRCHILD SEMICONDUCTOR CORPORATION. As used herein:

1. Life support devices or systems are devices or systems which, (a) are intended for surgical implant into the body, or (b) support or sustain life, and (c) whose failure to perform when properly used in accordance with instructions for use provided in the labeling, can be reasonable expected to result in a significant injury of the user.
2. A critical component in any component of a life support device or system whose failure to perform can be reasonably expected to cause the failure of the life support device or system, or to affect its safety or effectiveness.

Fairchild Semiconductor Corporation
Americas
Customer Response Center
Tel:1-888-522-5372

Fairchild Semiconductor Europe
Fax: +49 (0) 1 80-530 85 86
Email: europe.support@nsc.com
Deutsch Tel: +49 (0) 8 141-35-0
English Tel: +44 (0) 1 793-85-68-56
Italy Tel: +39 (0) 2 57 5631

Fairchild Semiconductor Hong Kong Ltd.
13th Floor, Straight Block,
Ocean Center, 5 Canto Rd.
Tsimshatsui, Kowloon
Hong Kong
Tel:+852 2737-7200
Fax:+852 2314-0061

National Semiconductor Japan Ltd.
Tel:81-3-5620-6175
Fax:81-3-5620-6179

www.fairchildsemi.com

2/98 0.0m
Stock#AN30000042
© 1998 Fairchild Semiconductor Corporation