Polycom® KIRK ISDN Interface Card

Installation Guide

POLYCOM®

Introduction

The KIRK ISDN Interface Card creates the interface between the switch and the digital cordless lines in the DECT solution. Furthermore, the KIRK ISDN Interface Card secures a galvanic isolation between the DECT solution and the switch (or the network provider).

1. KIRK ISDN NET5 Interface Card Features

The KIRK ISDN NET5 Interface Card contains the following features:

- The 2 Mbps KIRK ISDN Interface Card performs a 32 channel digital interface
- Up to 30 simultaneous conversations
- One RJ45 for 2 Mbit connection to Ethernet
- External data/paging and setup via RS232 serial interface
- Local RS232 for configuration, maintenance and debugging
- Transparency for the ISDN CLIP function
- Display (call info)

Additional KIRK ISDN QSIG 3.0 Interface Card features are:

- Call Hold
- Call Waiting
- Call Transfer

3. Installation

1 Power down the KIRK Wireless Server.

2 Remove the top cover by unscrewing the screws on both sides of the KIRK Wireless Server and the screws at the rear panel.

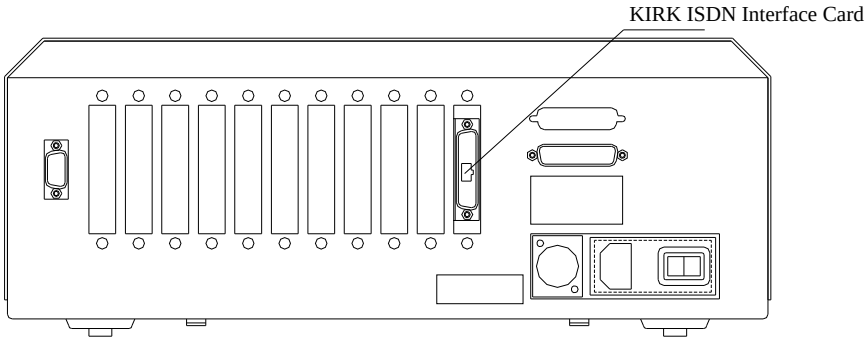

3 Remove the blind cover plate in front of the slot closest to the power supply (see figure above).

4 Insert the KIRK ISDN Interface Card in the slot and mount the two screws from the blind cover.

5 Replace the top cover.

6 Connect an RJ45 cable (not included) between the KIRK ISDN Interface Card on the rear of the KIRK Wireless Server and the switch.

7 Power up the KIRK Wireless Server 1500 again.

Software and help files are available at www.kirktelecom.com