PRO·FORM®

whirlwind
DUAL ACTION

USER'S MANUAL

Model No. 831.280442
Serial No. _____

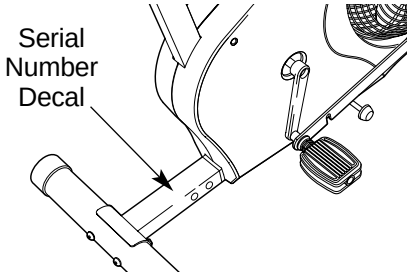

EXERCISE EQUIPMENT

QUESTIONS

HELPLINE!

1-800-736-6879

SEARS, ROEBUCK AND CO.,
HOFFMAN ESTATES, IL 60179

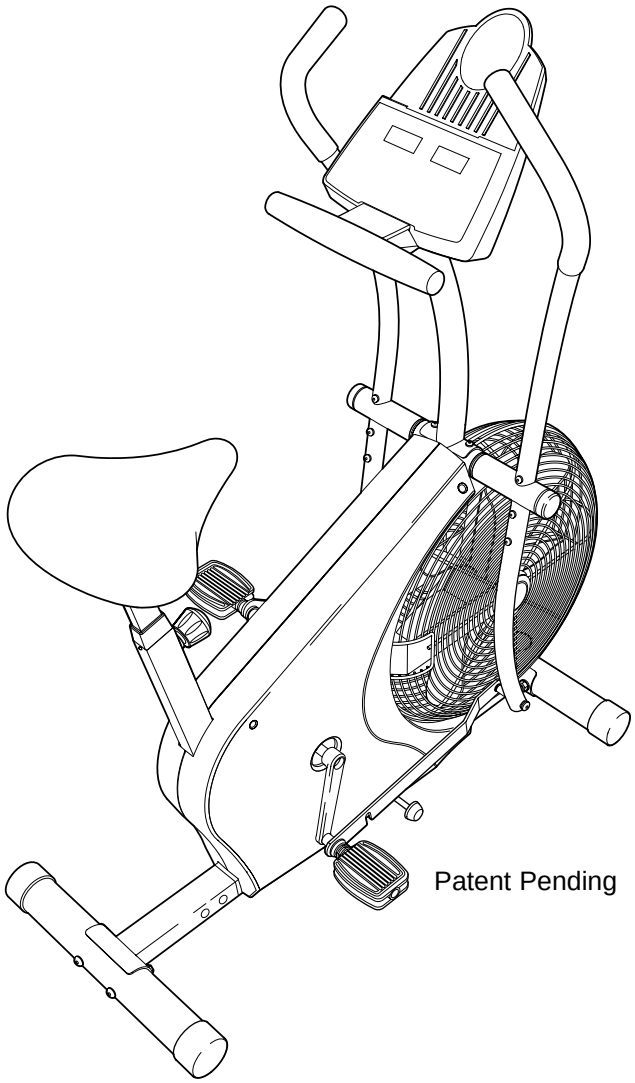

⚠ CAUTION

Read all precautions and instructions in this manual before using this equipment. Keep this manual for future reference.

Visit our website at

www.proform.com

new products, prizes, fitness tips, and much more!

PRO·FORM®

whirlwind
DUAL ACTION

TABLE OF CONTENTS

IMPORTANT PRECAUTIONS 3
BEFORE YOU BEGIN 4
ASSEMBLY 5
HOW TO OPERATE THE EXERCISE CYCLE 9
MAINTENANCE AND TROUBLESHOOTING 11
EXERCISE GUIDELINES 12
PART LIST 14
EXPLODED DRAWING 15
HOW TO ORDER REPLACEMENT PARTS . . . . . Back Cover
FULL 90 DAY WARRANTY . . . . . Back Cover

IMPORTANT PRECAUTIONS

⚠ WARNING: To reduce the risk of serious injury, read the following important precautions before using the exercise cycle.

1. **Read all instructions in this manual before using the exercise cycle.**
2. **It is the responsibility of the owner to ensure that all users of the exercise cycle are adequately informed of all precautions. Use the exercise cycle only as described.**
3. **The exercise cycle is intended for in-home use only. Do not use the exercise cycle in a commercial, rental, or institutional setting.**
4. **Use the exercise cycle indoors on a level surface. Keep the exercise cycle away from moisture and dust. Place a mat under the exercise cycle to protect the floor or carpet.**
5. **Inspect and properly tighten all parts regularly. Replace any worn parts immediately.**
6. **Keep children under the age of 12 and pets away from the exercise cycle at all times.**
7. **The exercise cycle should not be used by persons weighing more than 250 pounds.**
8. **Wear appropriate clothes when exercising; do not wear loose clothes that could become caught on the exercise cycle. Always wear athletic shoes when using the exercise cycle.**
9. **When connecting the link arms to the pedals, make sure that the link arms are fully seated on the pedal bushings (refer to HANDLEBAR OPERATION on page 9). If the link arms are not on the pedal bushings, they may slip off during use, resulting in injury to the user.**
10. **When adjusting the height of the seat, make sure that the pin on the seat knob is inserted into one of the adjustment holes in the seat post (refer to HOW TO ADJUST THE SEAT on page 9). Do not rest the seat post on top of the pin on the seat knob.**
11. **Always keep your back straight when using the exercise cycle; do not arch your back.**
12. **If you feel pain or dizziness while exercising, stop immediately and begin cooling down.**
13. **The pulse sensor is not a medical device. Various factors may affect the accuracy of heart rate readings. The pulse sensor is intended only as an exercise aid in determining heart rate trends in general.**

⚠ WARNING: Before beginning this or any exercise program, consult your physician. This is especially important for persons over the age of 35 or persons with pre-existing health problems. Read all instructions before using. SEARS assumes no responsibility for personal injury or property damage sustained by or through the use of this product.

BEFORE YOU BEGIN

Congratulations for selecting the new PROFORM® WHIRLWIND exercise cycle. Cycling is one of the most effective exercises for increasing cardiovascular fitness, building endurance, and toning the entire body. The PROFORM® WHIRLWIND offers an array of features designed to let you enjoy this healthful exercise in the comfort and privacy of your home.

For your benefit, read this manual carefully before you use the exercise cycle. If you have questions after reading this manual, please call our toll-free HELPLINE at 1-800-736-6879, Monday through Saturday, 7 a.m. until 7 p.m. Central Time (excluding holidays). To help us assist you, please mention the product model number when calling. The model number is 831.280442. The serial number can be found on a decal attached to the exercise cycle (see the front cover of this manual).

Before reading further, please familiarize yourself with the parts that are labeled in the drawing below.

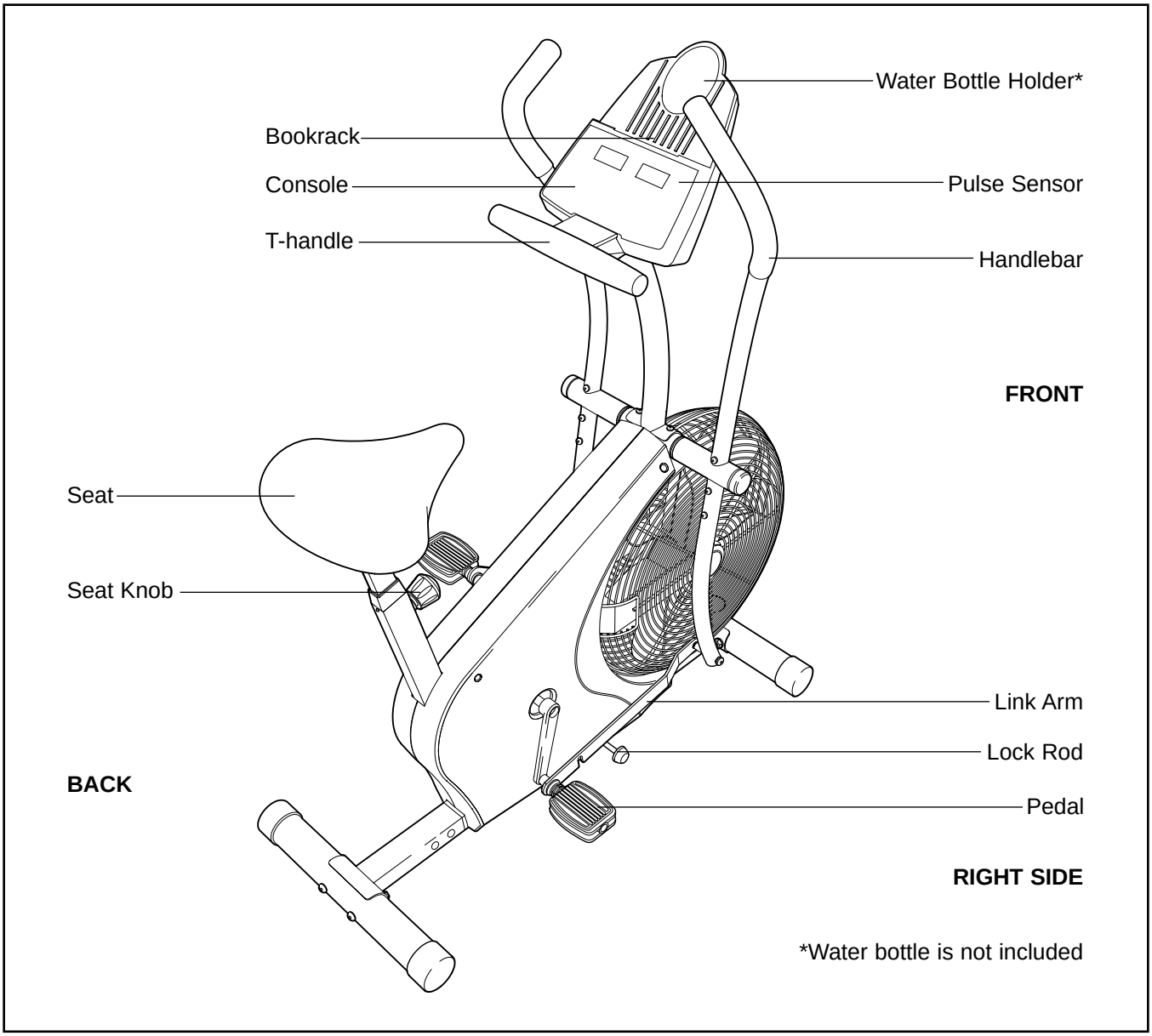

ASSEMBLY

Assembly requires two persons. Place all parts of the exercise cycle in a cleared area and remove the packing materials. Do not dispose of the packing materials until assembly is completed.

Assembly can be completed using the included tools; however, a rubber mallet **is also recommended.**

Use the drawings below to identify the small parts used in assembly. The number in parenthesis below each drawing refers to the key number of the part, from the PART LIST on page 14. The second number refers to the quantity needed for assembly. **Note: Some small parts may have been pre-attached for shipping. If a part is not in the parts bag, check to see if it has been pre-assembled.**

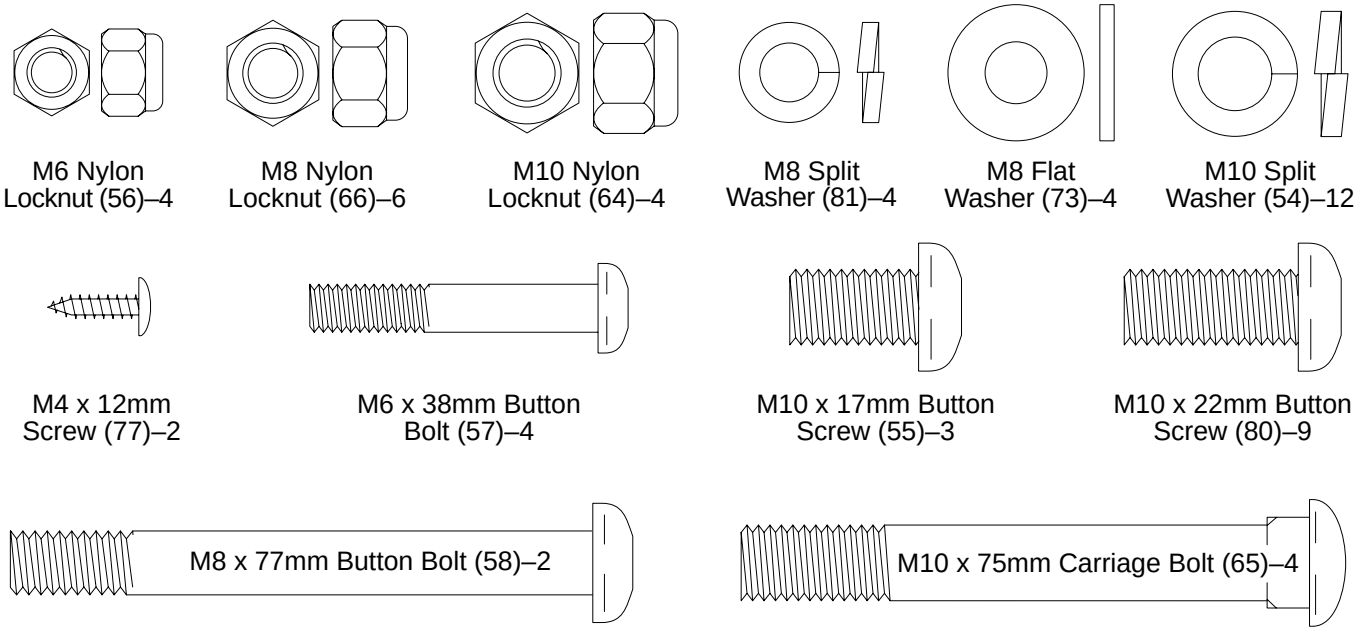

1. Attach one of the Stabilizers (19) to the front of the Frame (1) with two M10 x 75mm Carriage Bolts (65) and two M10 Nylon Locknuts (64).

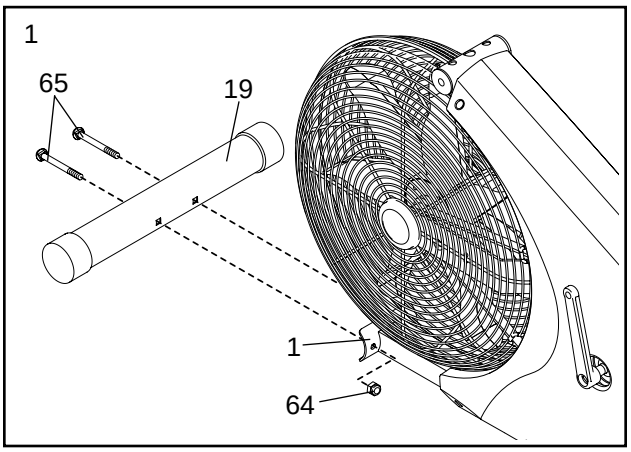

2. Attach the Frame Extension (84) to the Frame (1) with six M10 x 22mm Button Screws (80) and six M10 Split Washers (54).

   Attach the other Stabilizer (19) to the Frame Extension (84) with two M10 x 75mm Carriage Bolts (65) and two M10 Nylon Locknuts (64).

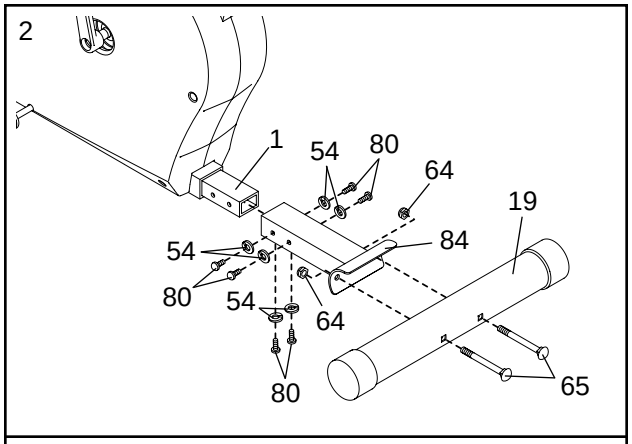

3. Attach the Seat (20) to the Seat Post (6) with four M8 Nylon Locknuts (66) and four M8 Split Washers (81). Note: The Nylon Locknuts and Split Washers may be preattached to the Seat.

   Turn the Seat Knob (29) counterclockwise two or three turns to loosen it. Next, pull the Seat Knob, insert the Seat Post (6) into the Frame (1), and then release the Seat Knob. **Move the Seat Post up and down slightly until it locks into position.**

   Push the Seat Guide (46) into the top of the Frame (1). Secure the Seat Guide to the Frame with an M4 x 4mm Screw (70). Then, tighten the Seat Knob.

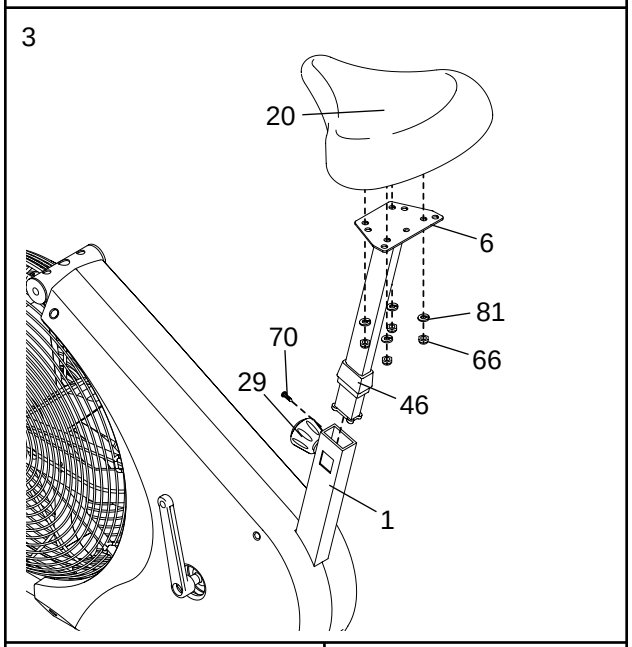

4. Apply a small amount of the included grease to the Handlebar Axle (33). Insert the Handlebar Axle into the Frame (1) and center it. **To avoid damaging the Reed Switch Wire (31), make sure that it is positioned as shown in the inset drawing.** (Note: It may be helpful to use a rubber mallet to insert the Handlebar Axle.)

   While another person holds the Upright (2) in the position shown, connect the Extension Wire (39) to the Reed Switch Wire (31). **Carefully pull the upper end of the Reed Switch Wire to remove any slack.**

   Set the Upright (2) on the Frame (1); **be careful not to pinch the Extension Wire (39) or the Reed Switch Wire (31).** Attach the Upright with three M10 x 17mm Button Screws (55) and three M10 Split Washers (54).

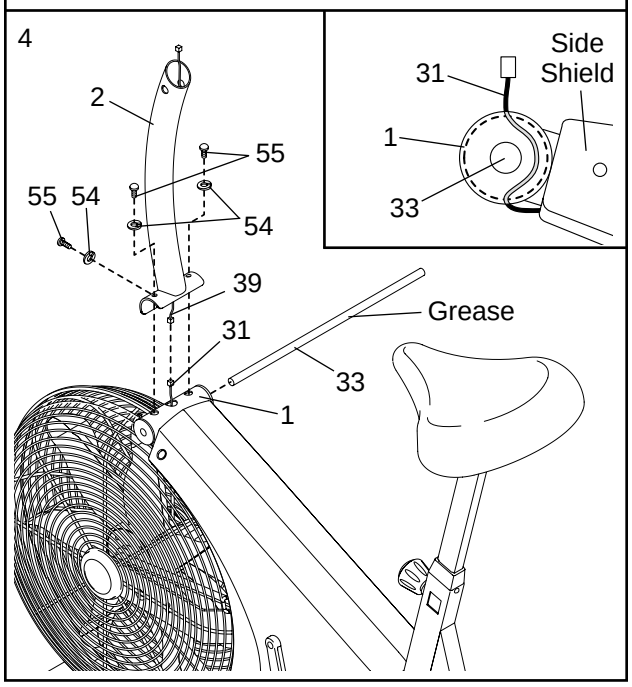

5. The Console (3) requires four “D” batteries (not included); alkaline batteries are recommended. Press the tab on the battery cover, and lift off the battery cover. Insert four batteries into the battery compartment. **Make sure that the batteries are oriented as shown by the diagram inside the battery compartment.** Reattach the battery cover.

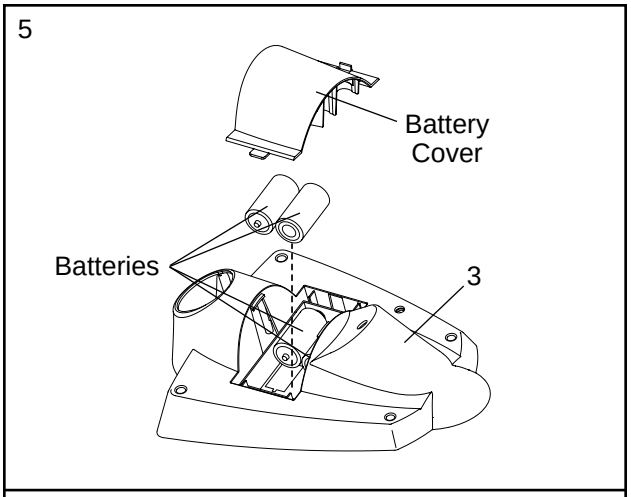

6. Refer to the inset drawing. Insert the T-handle (4) into the opening in the bottom of the Console (3) as shown. **Be careful not to pinch the console wire.** Align the holes in the metal tube on the T-handle with the holes in the bracket on the Console. Tighten two M4 x 12mm Screws (77) into the holes.

   While another person holds the Console (3) near the Upright (2), connect the console wire to the Extension Wire (39). Insert the excess console wire and Extension Wire into the Upright.

   Attach the Console (3) to the Upright (2) with three M10 x 22mm Button Screws (80) and three M10 Split Washers (54). **Be careful to avoid pinching the console wire or the Extension Wire (39).**

   Snap the bookrack onto the Console (3) in the location shown.

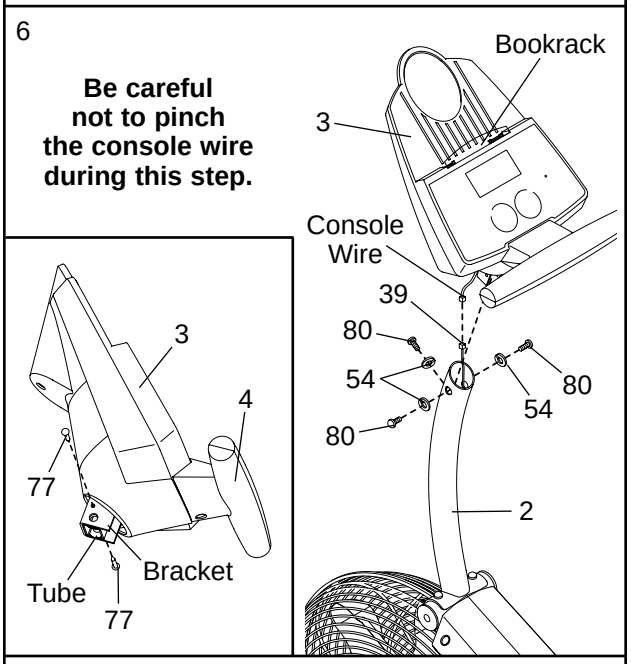

7. Identify the Left Handlebar (7) and the Left Handlebar Base (8), which are marked with stickers. Attach the Left Handlebar to the Left Handlebar Base with two M6 x 38mm Button Bolts (57) and two M6 Nylon Locknuts (56).

   Attach the Right Handlebar (not shown) to the Right Handlebar Base (not shown) in the same way.

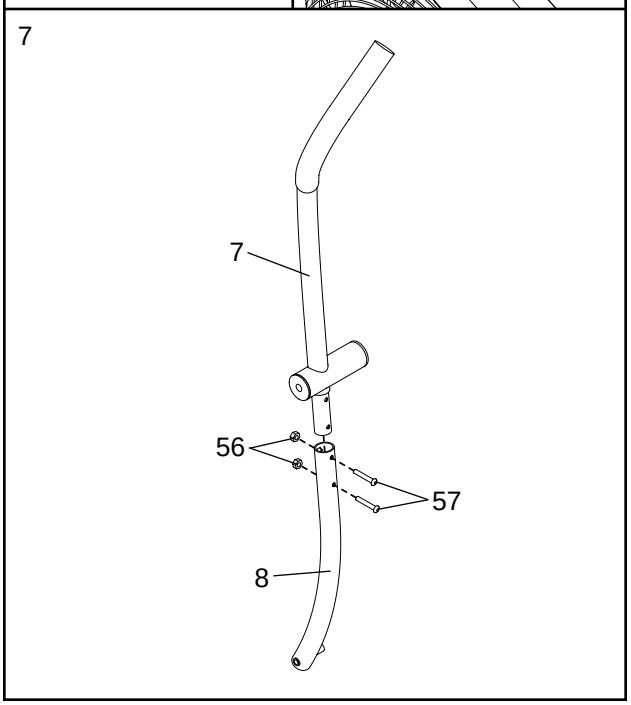

8. Slide the Left and Right Handlebars (7, 9) onto the Handlebar Axle (33). **Make sure that the Handlebars are on the correct sides.**

   Using the included pedal tool, tap a Push Nut (78) onto each end of the Handlebar Axle (33). **Make sure that the Push Nuts are turned as shown in the inset drawing.** (Note: It may be helpful if another person holds a block of wood against one end of the Handlebar Axle while you tap a Push Nut onto the other end.) Then, tap a Large Axle Cap (49) onto each end of the Handlebar Axle.

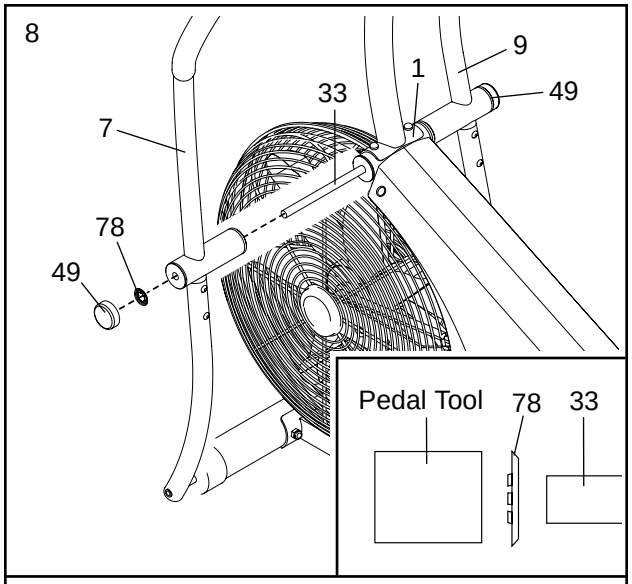

9. Identify the Left Link Arm (15), which is marked with a sticker.

   Apply a small amount of grease to an M8 x 77mm Button Bolt (58). Insert the Button Bolt into the Left Handlebar Base (8). Slide an M8 Flat Washer (73), a Link Arm Bushing (45), the Left Link Arm (15), and another M8 Washer (73) onto the Button Bolt. **Make sure that the Link Arm Bushing and the Left Link Arm are turned as shown.** Tighten an M8 Nylon Locknut (66) onto the Button Bolt. Rest the notch in the Left Link Arm on the left lock rod.

   Attach the Right Link Arm (not shown) to the Right Handlebar Base (not shown) in the same way.

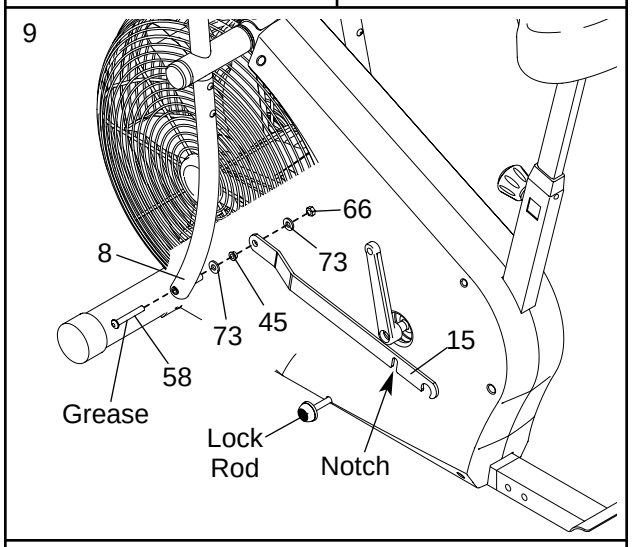

10. Remove the 1/2” Pedal Nut (68) from the shaft of one of the Pedals (23). Make sure that there is a Pedal Spring (42), a Red Washer (71), a Pedal Bushing (43), a Black Pedal Washer (79), and a Pedal Spacer (44) on the shaft of the Pedal. In addition, make sure that the Pedal Bushing (43) is turned as shown. Firmly tighten the shaft of the Pedal clockwise into the left Crank Arm (26). Tighten the 1/2” Pedal Nut (68) back onto the shaft.

    Attach the other Pedal (not shown) in the same way.

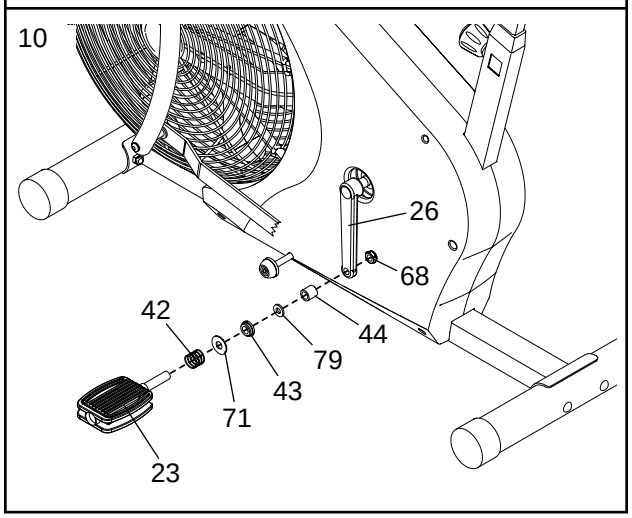

11. **Make sure that all parts are properly tightened before you use the exercise cycle. Place a mat beneath the exercise cycle to protect the floor.**

HOW TO OPERATE THE EXERCISE CYCLE

HANDLEBAR OPERATION

The handlebars can be used in either the dual-action mode, for both upper-body and lower-body exercise, or the stationary mode, for pedaling exercise only.

Dual-action Mode

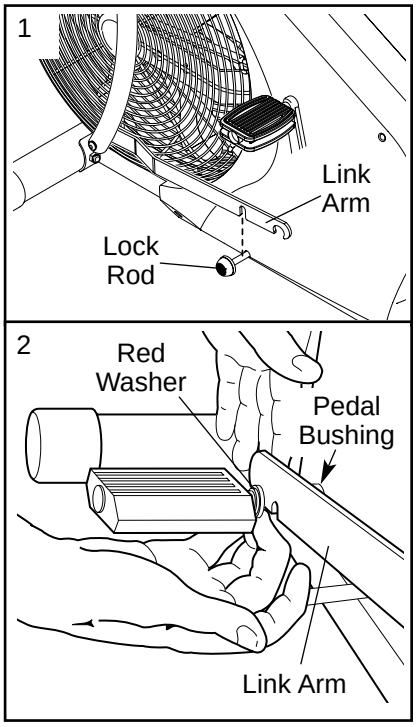

To convert the handlebars to the dual-action mode, the link arms must be connected to the pedals. Refer to drawing 1. Lift the link arms off the lock rods. Refer to drawing 2. Pull the link arms outward against the tops of the red washers, while pulling against the bottoms of the red washers with your fingers as shown. **Be careful not to pinch your fingers.** Next, slide the link arms onto the pedal bushings. Move the link arms up and down slightly to make sure that they are fully seated on the pedal bushings. **CAUTION: Make sure that the link arms are fully seated on the pedal bushings. If the link arms are not on the pedal bushings, they may slip off during use, resulting in injury to the user.**

Stationary Mode

To convert the handlebars to the stationary mode, the link arms must be disconnected from the pedals. Pull the link arms outward against the red washers until the link arms are free of the pedal bushings (see drawing 2 above). **Be careful not to pinch your fingers.** Next, lift the link arms off the pedals, and clip them onto the lock rods (see drawing 1 above).

HOW TO ADJUST THE SEAT

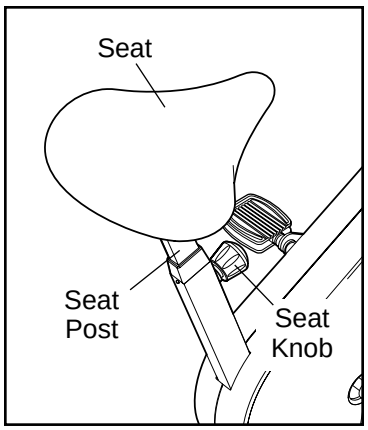

For effective exercise, the seat must be at the proper height. As you pedal, there should be a slight bend in your knees when the pedals are in the lowest position. To adjust the seat, first turn the seat knob counterclockwise two or three turns to loosen it. Next, pull the seat knob, raise or lower the seat post, and then release the seat knob. **Move the seat post up and down slightly until it locks into position.** Then, tighten the seat knob. **CAUTION: Make sure that the pin on the seat knob is inserted into one of the adjustment holes in the seat post. Do not rest the seat post on top of the pin on the seat knob.**

DESCRIPTION OF THE CONSOLE

The console features six modes that provide instant exercise feedback during your workouts. The modes are described below.

- Time—This mode displays the elapsed time.
- Distance—This mode displays the total distance you have pedaled.
- Speed—This mode displays your pedaling speed. Note: Speed and distance can be displayed in either miles or kilometers. An MPH or a KPH will appear when the speed is displayed to show which unit of measurement is selected. To change the unit of measurement, press and hold the On/Reset button for ten seconds.
- Calories—This mode displays the approximate number of calories you have burned.
- Fat calories—This mode displays the approximate number of fat calories you have burned (see FAT BURNING on page 12).
- Pulse—This mode displays your heart rate when the thumb pulse sensor is used (see step 3 on page 10).

BATTERY INSTALLATION

The console requires four “D” batteries. To install batteries, refer to assembly step 5 on page 7.

HOW TO OPERATE THE CONSOLE

Note: If there is a piece of clear plastic on the face of the console, remove it before operating the console.

1. To turn on the power, press the On/Reset button or begin pedaling.

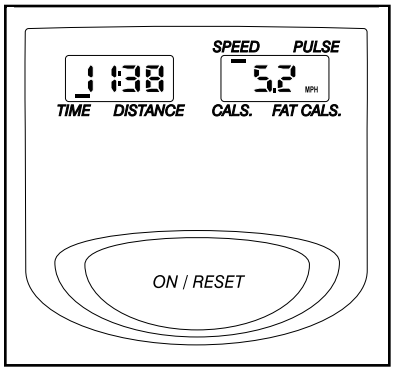

2. Begin exercising and monitor your progress with the two displays.

   Left display—This display shows the elapsed time and the distance that you have pedaled. The display will change from one number to the other every seven seconds, as shown by the indicators in the display.

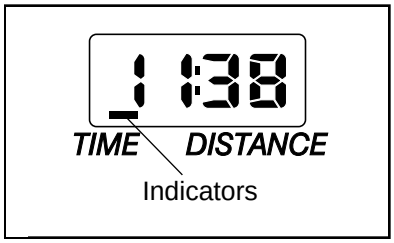

   Right display—This display shows your pedaling speed and the approximate numbers of calories and fat calories you have burned. When the thumb pulse sensor is used, the display will also show your heart rate (see step 3 at the right). Every seven seconds, the display will change from one number to the next, as shown by the indicators in the display.

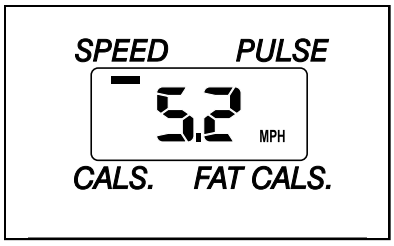

   To reset the displays at any time, press the On/Reset button.

3. Measure your heart rate, if desired.

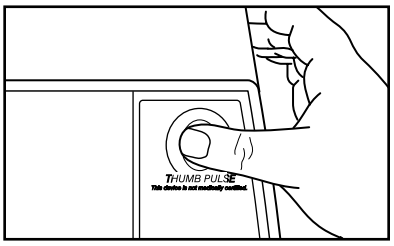

   To measure your heart rate, stop pedaling and place your thumb on the pulse sensor as shown. The pulse sensor is pressure activated—fully press it down. **Do not press too hard, or the circulation in your thumb will be restricted, and your pulse will not be detected.** Next, raise your thumb slightly until the heart-shaped indicator in the right display flashes **steadily**. Hold your thumb at this level. After a few seconds, two dashes will appear in the display, and then your heart rate will be shown. Hold your thumb on the pulse sensor for another 15 seconds for the most accurate reading. If the displayed heart rate appears to be too high or too low, or if your heart rate is not displayed, lift your thumb off the pulse sensor and allow the display to reset. Press down again on the pulse sensor as described above.

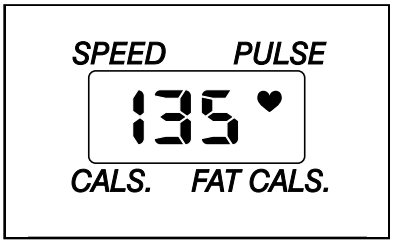

   Make sure that you are applying the proper amount of pressure to the pulse sensor. Try the pulse sensor several times until you become familiar with it. Remember to sit still while measuring your heart rate.

4. To turn off the power, simply wait for a few minutes. **The console has an “auto-off” feature. If the pedals are not moved and the On/Reset button is not pressed for a few minutes, the power will turn off automatically to conserve the batteries.**

MAINTENANCE AND TROUBLESHOOTING

Inspect and tighten all parts of the exercise cycle regularly. To clean the exercise cycle, use a damp cloth and mild detergent. Never use abrasives or solvents; keep liquid away from the console.

CONSOLE TROUBLESHOOTING

If the console does not function properly, the batteries should be replaced. See assembly step 5 on page 7 for battery installation instructions.

ADJUSTING THE BELT

The exercise cycle features a precision belt that must be kept properly adjusted. If the belt is too tight, the bearings may be damaged; if the belt is too loose, the fan may be damaged. If the belt causes excessive noise or slips as you pedal, follow the steps below.

Carefully remove the four Guard Clips (76), the left Guard Fastener (35), and the Left Guard (13). Press down on the Belt (22). **There should be no more than 3/4 inch, and no less than 1/4 inch, of vertical movement in the center of the Belt.**

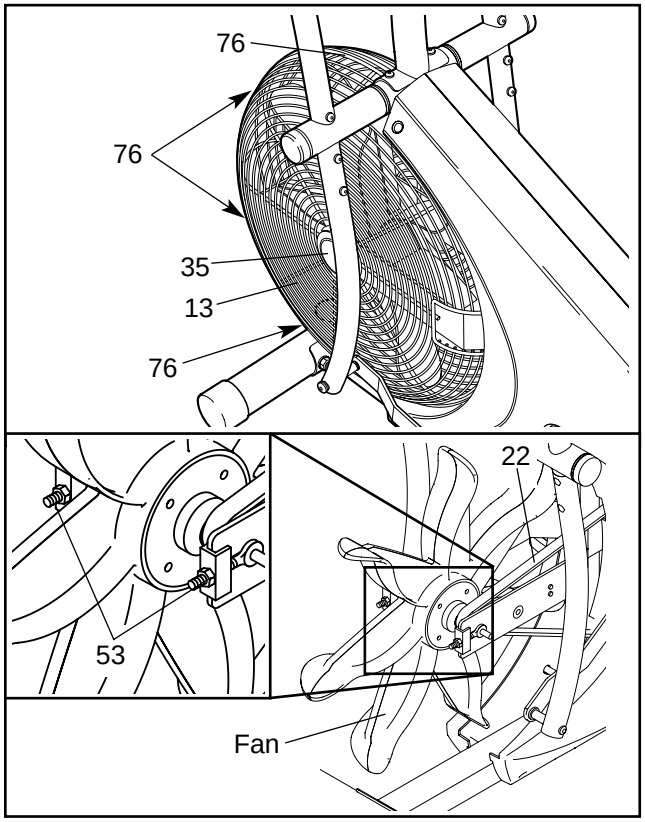

If the Belt (22) needs to be adjusted, loosen the right Guard Fastener (not shown). To tighten the Belt, turn the M6 Nuts (53) clockwise; to loosen the Belt, turn the M6 Nuts counterclockwise. Make sure that the fan is straight, and then reattach the Left Guard, tighten the Guard Fasteners, and reattach the Guard Clips.

ADJUSTING THE REED SWITCH

If the console does not display correct feedback, the reed switch should be adjusted. To adjust the reed switch, the Right Side Shield (18) must be moved (refer to the drawing below). Remove the four M4 x 25mm Screws (69) from the Left Side Shield (17). Lift the Right Link Arm (16) off the pedal or the lock rod and move it clear of the Right Side Shield. Pull the top of the Right Side Shield away from the Left Side Shield.

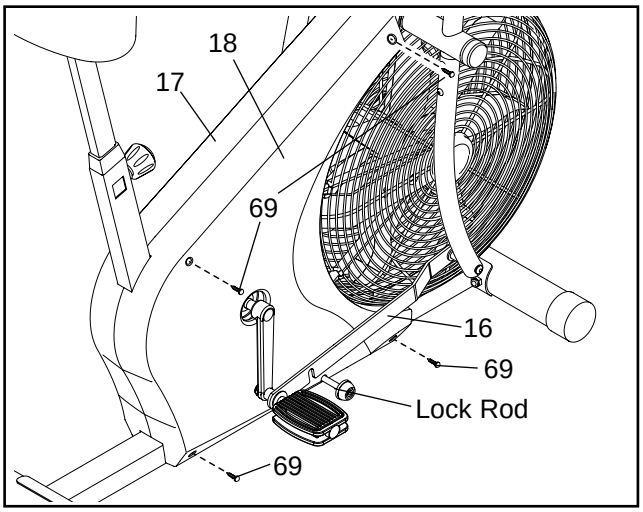

Next, locate the Reed Switch (31). Turn the Crank Arm (26) until the Magnet (48) is aligned with the Reed Switch. Loosen, but do not remove, the M4 x 16mm Screw (27). Slide the Reed Switch slightly closer to or away from the Magnet. Retighten the Screw. Turn the Crank for a moment. Repeat until the console displays correct feedback. When the Reed Switch is correctly adjusted, reattach the Right Side Shield.

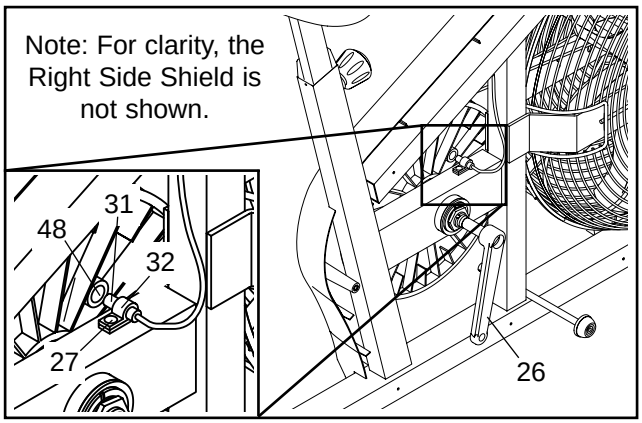

EXERCISE GUIDELINES

⚠ WARNING: Before beginning this or any exercise program, consult your physician. This is especially important for individuals over the age of 35 or individuals with pre-existing health problems.

The pulse sensor is not a medical device. Various factors may affect the accuracy of heart rate readings. The pulse sensor is intended only as an exercise aid in determining heart rate trends in general.

The following guidelines will help you to plan your exercise program. Remember that proper nutrition and adequate rest are essential for successful results.

EXERCISE INTENSITY

Whether your goal is to burn fat or to strengthen your cardiovascular system, the key to achieving the desired results is to exercise with the proper intensity. The proper intensity level can be found by using your heart rate as a guide. The chart below shows recommended heart rates for fat burning, maximum fat burning, and cardiovascular (aerobic) exercise.

PULSE TRAINING ZONES

AGE	20	30	40	50	60	70	80
MAX	165	155	145	140	130	125	115
bpm	145	138	130	125	118	110	103
MIN	125	120	115	110	105	95	90

To find the proper heart rate for you, first find your age on the chart above (ages are rounded off to the nearest ten years). Next, find the three numbers below your age; the three numbers are your “training zone.” The lowest number is the recommended heart rate for fat burning; the middle number is the recommended heart rate for maximum fat burning; and the highest number is the heart rate for aerobic exercise.

Fat Burning

To burn fat effectively, you must exercise at a relatively low intensity level for a sustained period of time. During the first few minutes of exercise, your body uses easily accessible *carbohydrate* calories for energy. Only after the first few minutes of exercise does your body begin to use stored *fat* calories for energy. If your goal is to burn fat, adjust the intensity of your exercise until your heart rate is near the lowest number or the middle number in your training zone as you exercise.

Aerobic Exercise

If your goal is to strengthen your cardiovascular system, your exercise must be “aerobic.” Aerobic exercise is activity that requires large amounts of oxygen for prolonged periods of time. This increases the demand on the heart to pump blood to the muscles, and on the lungs to oxygenate the blood. For aerobic exercise, adjust the intensity of your exercise until your heart rate is near the highest number in your training zone.

WORKOUT GUIDELINES

Each workout should include the following three parts:

A warm-up, consisting of 5 to 10 minutes of stretching and light exercise. A proper warm-up increases your body temperature, heart rate, and circulation in preparation for exercise.

Training zone exercise, consisting of 20 to 30 minutes of exercising with your heart rate in your training zone. (During the first few weeks of your exercise program, do not keep your heart rate in your training zone for longer than 20 minutes.)

A cool-down, with 5 to 10 minutes of stretching. This will increase the flexibility of your muscles and will help to prevent post-exercise problems.

EXERCISE FREQUENCY

To maintain or improve your condition, plan three workouts each week, with at least one day of rest between workouts. After a few months of regular exercise, you may complete up to five workouts each week, if desired. The key to success is make exercise a regular and enjoyable part of your everyday life.

SUGGESTED STRETCHES

The correct form for several basic stretches is shown at the right. Move slowly as you stretch—never bounce.

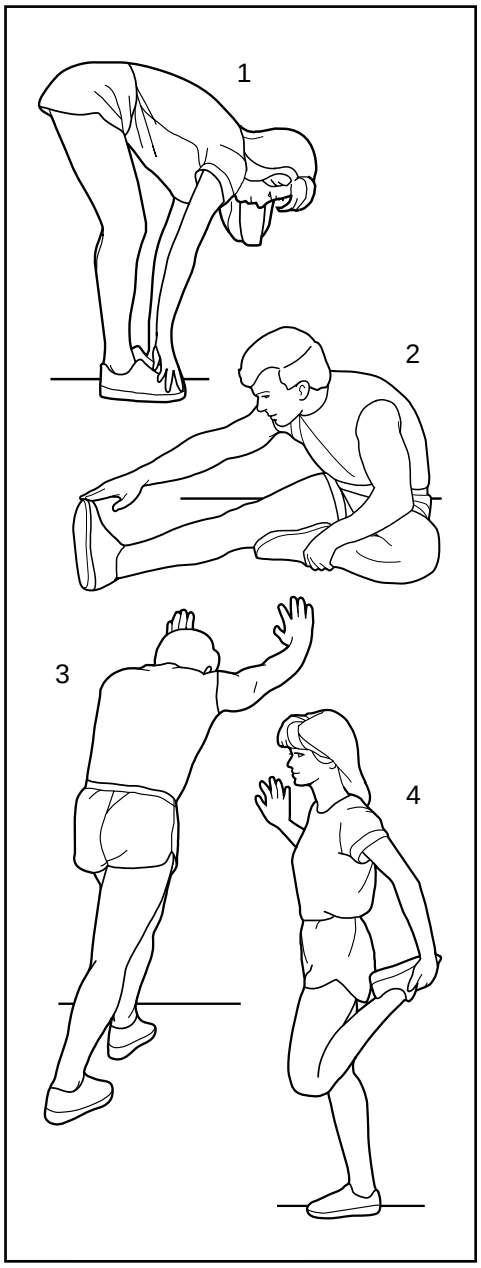

1. Toe Touch Stretch

Stand with your knees bent slightly and slowly bend forward from your hips. Allow your back and shoulders to relax as you reach down toward your toes as far as possible. Hold for 15 counts, then relax. Repeat 3 times. Stretches: Hamstrings, back of knees and back.

2. Hamstring Stretch

Sit with one leg extended. Bring the sole of the opposite foot toward you and rest it against the inner thigh of your extended leg. Reach toward your toes as far as possible. Hold for 15 counts, then relax. Repeat 3 times for each leg. Stretches: Hamstrings, lower back and groin.

3. Calf/Achilles Stretch

With one leg in front of the other, reach forward and place your hands against a wall. Keep your back leg straight and your back foot flat on the floor. Bend your front leg, lean forward and move your hips toward the wall. Hold for 15 counts, then relax. Repeat 3 times for each leg. To cause further stretching of the achilles tendons, bend your back leg as well. Stretches: Calves, achilles tendons and ankles.

4. Quadriceps Stretch

With one hand against a wall for balance, reach back and grasp one foot with your other hand. Bring your heel as close to your buttocks as possible. Hold for 15 counts, then relax. Repeat 3 times for each leg. Stretches: Quadriceps and hip muscles.

EXPLODED DRAWING—Model No. 831.280442

R1102A

Key No.	Qty.	Description
1	1	Frame
2	1	Upright
3	1	Console
4	1	T-handle
5	1	Fan
6	1	Seat Post
7	1	Left Handlebar
8	1	Left Handlebar Base
9	1	Right Handlebar
10	1	Right Handlebar Base
11	2	Foam Grip
12	2	Handlebar Endcap
13	1	Left Guard
14	1	Right Guard
15	1	Left Link Arm
16	1	Right Link Arm
17	1	Left Side Shield
18	1	Right Side Shield
19	2	Stabilizer
20	1	Seat
21	4	Stabilizer Endcap
22	1	Belt
23	2	Pedal
24	2	Handlebar Base Endcap
25	1	Pulley/Crank
26	2	Crank Arm
27	2	M4 x 16mm Screw
28	1	Bearing Assembly
29	1	Seat Knob
30	2	Guard Bracket
31	1	Reed Switch/Wire
32	1	Clamp
33	1	Handlebar Axle
34	6	Handlebar Bushing
35	2	Guard Fastener
36	1	Fan Axle
37	2	Fan Bearing
38	2	Adjustment Bracket
39	1	Extension Wire
40	1	Idler Arm
41	2	Crank Cover
42	2	Pedal Spring
43	2	Pedal Bushing
44	2	Pedal Spacer
45	2	Link Arm Bushing
46	1	Seat Guide
47	1	Seat Post Bushing
48	1	Magnet
49	2	Large Axle Cap
50	2	Small Axle Cap
51	1	Fan Washer
52	2	Eyebolt
53	2	M6 Nut
54	12	M10 Split Washer
55	3	M10 x 17mm Button Screw
56	4	M6 Nylon Locknut
57	4	M6 x 38mm Button Bolt
58	2	M8 x 77mm Button Bolt
59	1	M10 x 25mm Flat Head Bolt
60	1	Frame Extension
61	2	Axle Bushing
62	4	M4 x 16mm Round Screw
63	1	Idler Arm Washer
64	5	M10 Nylon Locknut
65	4	M10 x 75mm Carriage Bolt
66	6	M8 Nylon Locknut
67	2	Flange Screw
68	2	1/2” Pedal Nut
69	9	M4 x 25mm Screw
70	1	M4 x 4mm Screw
71	2	Red Washer
72	4	M8 Split Washer
73	4	M8 Flat Washer
74	1	Fan Spacer
75	1	Idler Spring
76	4	Guard Clip
77	2	M4 x 12mm Screw
78	2	Push Nut
79	2	Black Pedal Washer
80	9	M10 x 22mm Button Screw
#	1	User’s Manual

Note: “#” indicates a non-illustrated part. Specifications are subject to change without notice. See the back cover of this manual for information about ordering replacement parts.

EXPLODED DRAWING—Model No. 831.280442

R1102A

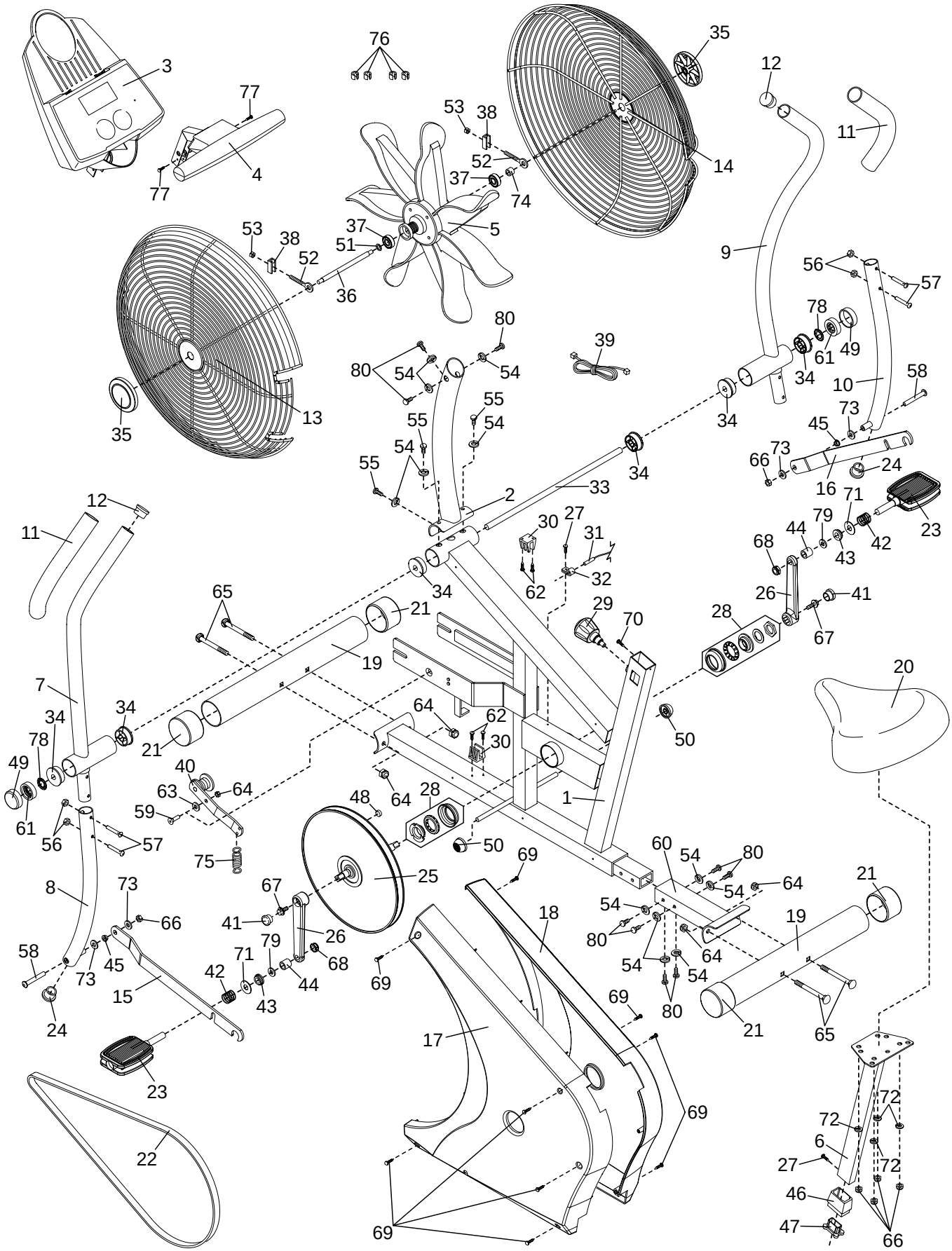

SEARS

Model No. 831.280442

QUESTIONS?

If you find that:

- **you need help assembling or operating the PROFORM® WHIRLWIND**
- **a part is missing**
- **or you need to schedule repair service**

call our toll-free HELPLINE

1-800-736-6879

Monday–Saturday, 7 am–7 pm Central Time (excluding holidays)

REPLACEMENT PARTS

If parts become worn and need to be replaced, call the following toll-free number

1-800-FON-PART (1-800-366-7278)

All replacement parts are available for immediate purchase or special order when you visit your nearest SEARS Service Center. To request service or to order parts by telephone, call the toll-free numbers listed at the left.

When requesting help or service, or ordering parts, please be prepared to provide the following information:

- The MODEL NUMBER of the product (831.280442)
- The NAME of the product (PROFORM® WHIRLWIND exercise cycle)
- The KEY NUMBER and DESCRIPTION of the PART (see the PART LIST and the EXPLODED DRAWING on pages 14 and 15)

FULL 90 DAY WARRANTY

For 90 days from the date of purchase, if failure occurs due to defect in material or workmanship in this SEARS BIKE EXERCISER, contact the nearest SEARS Service Center throughout the United States and SEARS will repair or replace the BIKE EXERCISER, free of charge.

This warranty does not apply when the BIKE EXERCISER is used commercially or for rental purposes.

This warranty gives you specific legal rights, and you may also have other rights which vary from state to state.

SEARS, ROEBUCK AND CO., DEPT. 817WA, HOFFMAN ESTATES, IL 60179

Part No. 193742 R1102A

Printed in China © 2002 Sears, Roebuck and Co.