andis®

MODEL PMC2 TRIMMER 230/240 VOLT

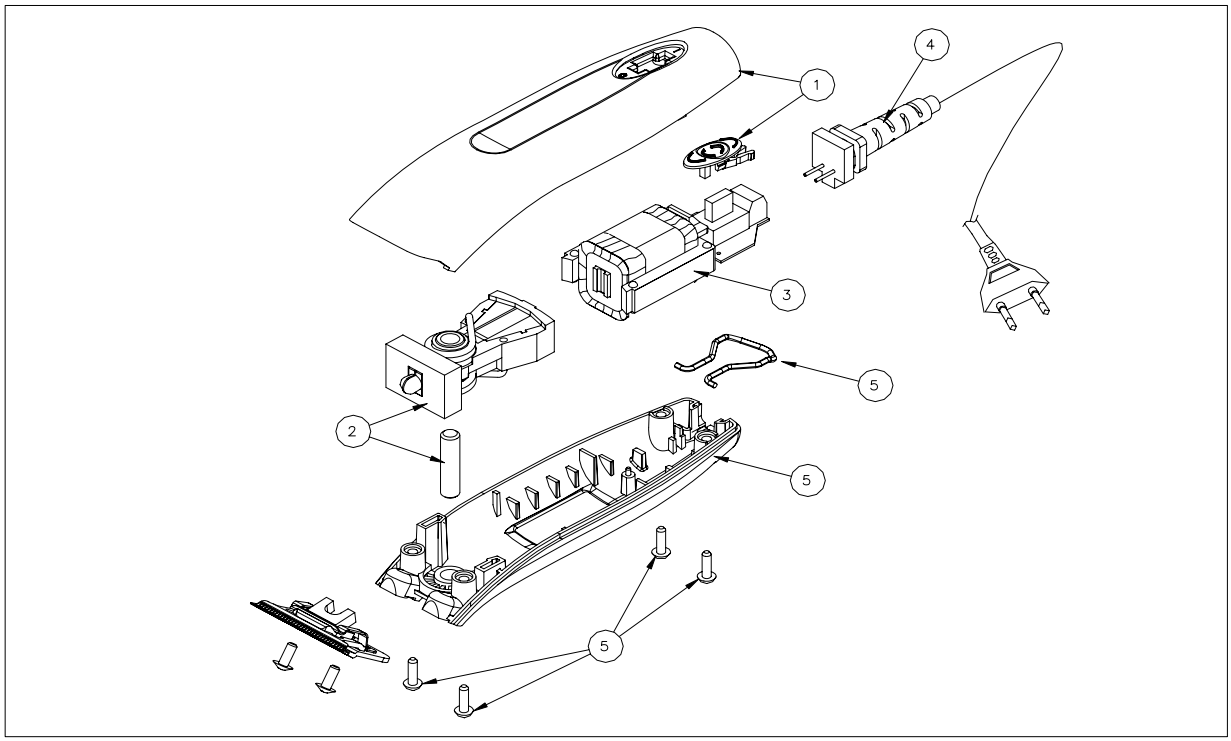

ITEM NO.	PART NO.	DESCRIPTION	QTY. REQ'D		ITEM NO.	PART NO.	DESCRIPTION	QTY. REQ'D
1	69036	Upper Housing Assy - Black	1					
		(Includes Upper Housing and Switch Actuator						
2	69037	Pivot Assembly	1					
		(Includes Pivot Assembly and Pin)						
3	73024	PCB/Field Assembly	1					
4	73027	Cord Assembly	1					
5	69038	Lower Housing Assy - Black	1					
		(Includes Lower Housing, Screws, and Hanger Hook)						

IMPORTANT INFORMATION

When ordering repair parts, include part number, part name and model of trimmer. For best performance, trimmer blades should be CLEANED and OILED with Andis Clipper Oil before and after use, If repair is necessary, return to any Andis Authorized Repair Service Station, or to Andis Company, 1800 Renaissance Blvd., Sturtevant, Wisconsin, 53177 U.S.A.. Pack carefully, mail either Insured Parcel Post, or U.P.S. , attach a letter to outside of package explaining difficulty.