SINK SPECIFICATIONS

Premium Series

BLANCOMAGNUM™ LARGE SINGLE BOWL Drop In

Model 501-118-8

BLANCO

FEATURED MODEL

501-118-8 **8" bowl depth**

ADDITIONAL MODELS

501-118-10 **10-1/2" bowl depth**

501-118-12 **12" bowl depth**

FEATURES

- 18 gauge, 304 series stainless steel
- 18/8 chrome/nickel content
- Long-lasting, easy-to-clean, satin finish
- 4 diagonal drain grooves channel water directly to center drain
- Straight bowl sides with 1-1/2" cutout corner radius

OPTIONAL ACCESSORIES

Sink Grid: 220-997 (Formerly 501-913)

Colander: 215-651

WARRANTY

Blanco America's BLANCOMAGNUM™ Series sinks feature a "NO HASSLE" LIMITED LIFETIME WARRANTY to be free of all manufacturing defects under normal use. See our complete warranty for details.

While Blanco America endeavors to provide accurate information, all dimensions are nominal, cannot be guaranteed, and are subject to change or cancellation. Blanco America assumes no responsibility for use of superseded or voided specifications.

PRODUCT SPECIFICATION

Drop-In sink to be specialty single bowl design, 33" in length and 22" in front-to-back depth. Sink to be made from 18 gauge, 304 series stainless steel, with 18/8 chrome/nickel content and satin finish. Sink to feature center drain placement, 4 diagonal drain grooves and straight bowl sides with 1-1/2" cutout corner radius. Sink to be Blanco Model 501-118-8, with bowl depth of 8". Additional knockout hole locations:_____ _____.

MODEL 501-118-8

NOMINAL DIMENSIONS

MODEL	OVERALL	CUTOUT SIZE	BOWL DEPTH	DRAIN DIAMETER
501-118-8	33 x 22	32-1/4 x 21-1/4	8	3-1/2

DXF cutout templates available on our web site.

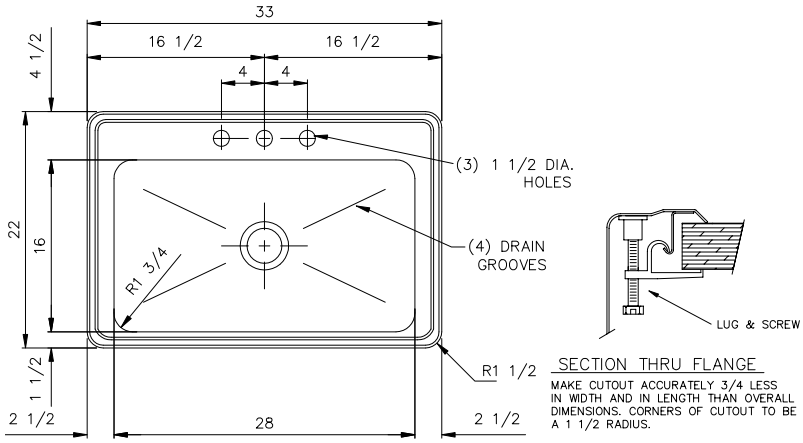

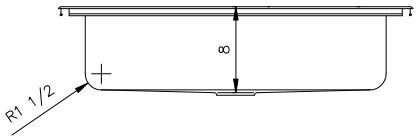

JOB INFORMATION

Job Name: _____

Contact: _____

Date Specified: _____

Specifier: _____

Contractor: _____

KNOCKOUT HOLE LOCATIONS

Pre-drilled for three faucet holes.

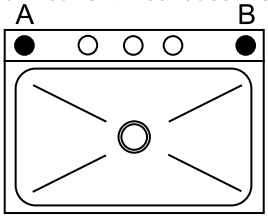

BLANCO AMERICA
800.451.5782
www.blancoamerica.com

© 2007 BLANCO AMERICA