Fluorescent Frame-In Kit 6 3/4” Aperture Low Profile 2 Lt.

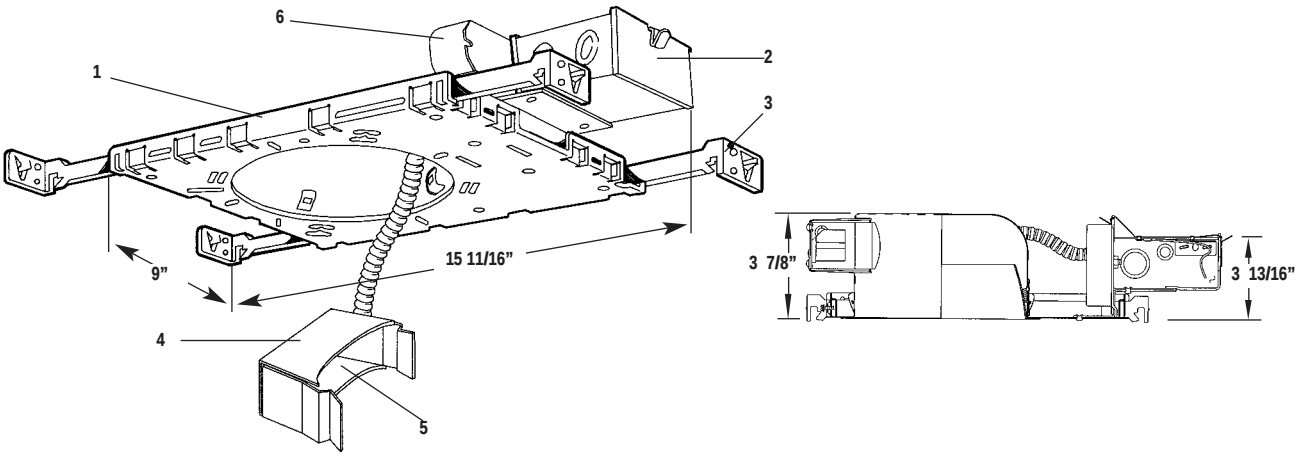

Ceiling Opening

Complete Fixture consists of Reflector Trim & Frame-In Kit. Select each separately.

Frame-In Kit	Ballast	Voltage	Lamp Type		Electrical Input Wattage	Electrical Input Current
1102T1	**NPF Magnetic**	**120V**	**2 Pin (Gx23)**	**13W Twin Tube**	**35W**	**.600A**
1102TH1	**HPF Magnetic**	**120V**	**2 Pin (Gx23)**	**13W Twin Tube**	**32W**	**.280A**
1102TH2	**HPF Magnetic**	**277V**	**2 Pin (Gx23)**	**13W Twin Tube**	**32W**	**.160A**
1102TH1R (Remodel)*	**HPF Magnetic**	**120V**	**2 Pin (Gx23)**	**13W Twin Tube**	**31W**	**.280A**
1102T13U	**HPF Electronic**	**120V/277V**	**4 Pin (G24q-1)**	**13W Quad Tube**	**33W**	**.28/.12A**
1102T18U	**HPF Electronic**	**120V/277V**	**4 Pin (G24q-2)**	**18W Quad Tube**	**40W**	**.34/.15A**
1102T26U	**HPF Electronic**	**120V/277V**	**4 Pin (G24q-3)**	**26W Quad Tube**	**56W**	**.47/.21A**

Reflector Trims — See Individual Reflector Trim Specification Sheets

Alzak® Cone	Step Baffle	Cross Blade	Fresnel Lens	Enclosed Diffuser	Wall Washer
1113TGD **1113TCL**	**1105T** **1105TWH**	**1132T**	**1126T**	**1128T** **1178T**	**1135T** **1135TWH**

Features

1. **Mounting Frame:** #20 ga. galvanized steel. Accommodates ceiling up to 1” thick. Push-in/twist-out rotoclips hold reflector flush to ceiling.
2. **Junction Box:** #14 ga. galvanized steel. Rated for 8 #12 AWM through branch circuit wires suitable for 90° C, for end of run 75° C. Quick release “L” shaped cover for access to wiring. Integral cable clamps permit attachment of non-metallic Romex® or armored cable without the need for separate connectors.
3. **Mounting Bars:** Die-formed steel, 16 ga. Four bars, 13” long, extend to 27”, permit off-center mounting; bars rotate 90° and lock in both directions; integral nailer for wood joists, locking tabs for T-bar runners.
4. **Socket Housing:** 22 ga. galvanized spring steel; snap-in quick assembly for precise lamp location.
5. **Socket:** Molded thermoplastic; prewired with #18 AWM leads to 4” X 3 1/2” X 2” junction box.
6. **Thermally Protected Ballast:** Single 2 lamp magnetic or universal voltage electronic, Class-P Rated. Insulation must be kept 3” away from fixture sides and wiring compartment and must not be placed above fixture as to entrap heat.

Options and Accessories

Plaster Ceiling Ring: **1961** - 7/8” depth for wet plaster ceiling.
Remodeler Anchor Clip: **1985S**

Labels

UL (Suitable for Damp Locations), I.B.E.W.

Romex® is a registered trademark of General Cable Industries Inc.
US Patent Nos.: 5,045,985; 4,327,403 and patents pending

Job Information Type:

Job Name:

Cat. No.:

Lamp(s):

Notes:

Lightolier a Genlyte company www.lightolier.com
631 Airport Road, Fall River, MA 02720 • (508) 679-8131 • Fax (508) 674-4710
We reserve the right to change details of design, materials and finish.
© 2006 Genlyte Group LLC • B0506

LIGHTOLIER®