andis®

MODEL MVP-2 CLIPPER
230/240 VOLT

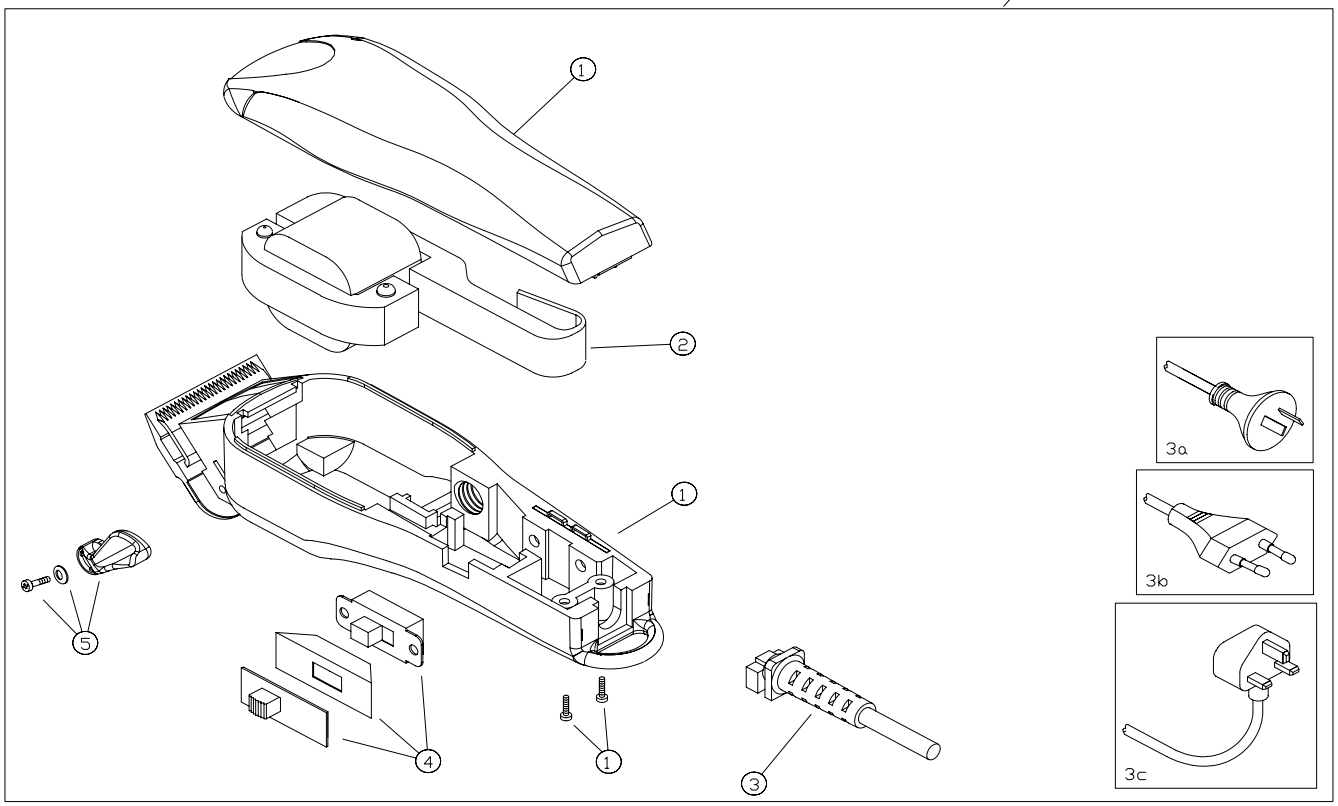

ITEM NO.	PART NO.	DESCRIPTION	QTY. REQ'D
1	18374	Upper/Lower Housings w/ screws	1
2	Not Serviced	Motor Assembly	1
3		Cord	
3a	18372	Cord SAA	1
3b	18371	Cord CE	1
3c	18369	Cord BS	1
4	18373	Switch Assembly	1
5	18368	Lever Assembly	1

ITEM NO.	PART NO.	DESCRIPTION	QTY. REQ'D

IMPORTANT INFORMATION

When ordering repair parts, include part number, part name and model of trimmer. For best performance, trimmer blades should be CLEANED and OILED with Andis Clipper Oil before and after use, If repair is necessary, return to any Andis Authorized Repair Service Station, or to Andis Company, 1800 Renaissance Blvd., Sturtevant, Wisconsin, 53177 U.S.A.. Pack carefully, mail either Insured Parcel Post, or U.P.S. , attach a letter to outside of package explaining difficulty.

Rev-A 12/12/05