SPECIFICATIONS SHEET

NILES®

SAS-1

AUTOMATED SWITCHING SYSTEM

Combination Speaker-Level A-B Switching System

- Includes 16Volt AC power supply
- Audio, Video or Voltage-Triggered
- Individually boxed

Combination Speaker-Level and A/V Line-Level Switching System

SAS-1

Stock Number

FG00230

FEATURES

- Replaces manually operated A-B switches
- Audio power handling: 600W per channel
- SAS-1 is capable of switching speaker-level, line-level audio, and composite video signals
- May be configured to use any of three trigger signals: Audio, Video, or Voltage
- Exclusive signal-detection circuitry ensures reliable operation
- Control input for voltage activation (5V-30V AC/DC at 20mA)
- 12Volt control output for activating other Niles devices such as a SPK-1, AVS-2, AC-3, APC-2 or RFS-1
- N.O. (normally open) relay contacts for controlling devices such as electric screens, lifts and drapes
- Relay contacts rated at one amp, 30V max., AC/DC
- Premium gold-plated RCA connectors and nickel-plated five-way binding posts

SPECIFICATIONS

- Dimensions: 6-13/16" wide x 3-1/8" high x 5-5/16" deep

Warranty: Two-year limited

Product Detail
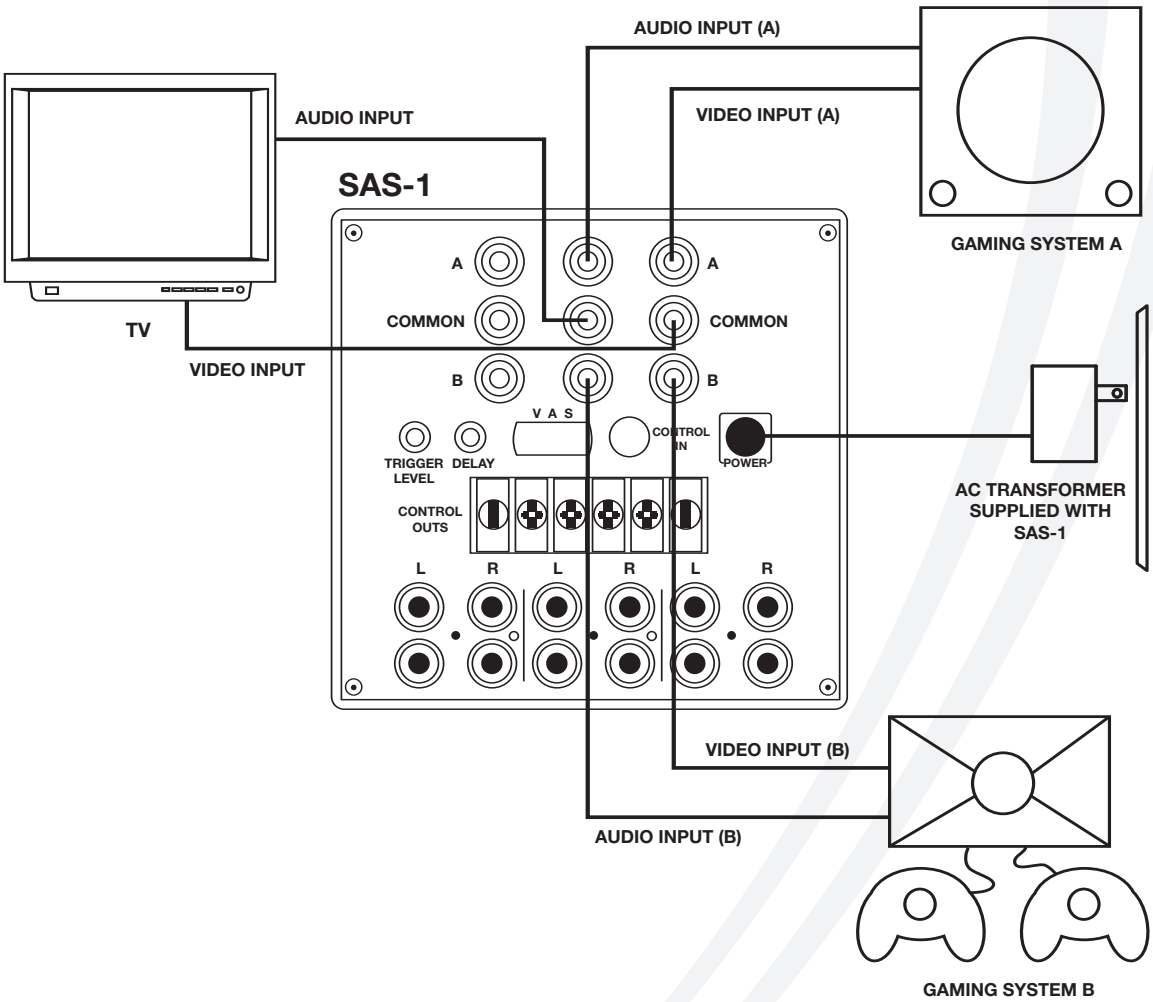
Installation example using the SAS-1 signal activated switch