BOXLIGHT CORPORATION

19462 Powder Hill Place
Poulsbo, WA 98370
800.762.5757
360.779.7901
www.boxlight.com

USER MANUAL

CP755ew

Digital Multimedia Projector

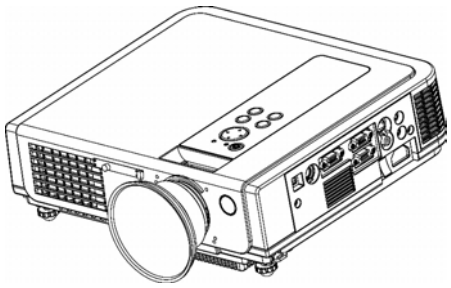

About User's manual

Thank you for purchasing the LCD projector. Please read this user's manual thoroughly to ensure correct usage of the projector and its features.
After reading, store this instruction manual in a safe place for future reference.

Features

1. Design with 3LCD optical system, provide you: Bright image, natural color, smooth video playback and gentle for your eyes.
2. Dynamic Contrast and 3D Comb Filter
3. Auto V keystone function, +/- 30 degrees.
4. Auto brightness control.
5. Auto ceiling function.
6. Support YPbPr signal.

The content of this manual is subject to change without period notice.
All rights reserved.

Table of Contents

Safety Instructions…… 04

Checking the Package Content……..…… 10

Before Use

Names and Function of Each Part

Main Unit.....…….. 11
Keypad Control .....…….....…… 13
Rear View I/O Board .....…….…… 15
Bottom View.....……..... 17
Remote Control….....…… 18
Inserting the batteries ....…… 19

Installation

Setting up the projector…….…… 20
Screen size and projection distance…… 22
Adjusting the image position..…… 23
Moving the projector……..…… 24

How to connect

Desktop PC.....…….....…… 25
Laptop PC.....……... ……. 26
USB Mouse.....……..……..... 27
Video.....……..... 28

Basic Operation

Turning on the projector…….…… 29
Adjusting the screen image…….…… 31
Turning off the power……..…… 32

Function of Menu

Keypad operating……..…… 33
Computer mode……..…… 34
Video mode……..…… 40

Maintenance and

Ceiling Mounted Installation Guide……..…. 46
Cleaning the Projector/Lens……..…… 47
Cleaning air filter……..…… 47
Lamp replacement…….…… 48
Indicators……..…… 49

List of Support Displays Modes…….. 51

About the symbols

Various symbols are used in this instruction manual and on the product itself to ensure correct usage, to prevent danger to the users and others, and to prevent property damage.
The meanings of these symbols are described below. It is important that you read these descriptions thoroughly and fully understand the contents.

Warning

This symbol indicates information that, if ignored, could possibly result in personal injury or even death.

Caution

This symbol indicates information that, if ignored, could result in personal injury or physical damage.

This symbol indicates an additional warning (including cautions). An illustration is provided to clarify the contents (for example: the illustration to the left indicates danger of electrical shock).

This symbol indicates a prohibited action. The contents will be clearly indicated in an illustration or description near the symbol (for example: the symbol to the left indicates that disassembly is

This symbol indicates a compulsory action.
The contents will be clearly indicated in an illustration or description near the symbol (for example: the symbol to the left shows that the power plug should be disconnected from the power outlet).

Warning

□ **If a problem should occur**

✧ If smoke or strange odors arise, continued use could result in fire or electrical shock. In such case, immediately turn off the power switch and then disconnect the power plug from the power outlet. After making sure that the smoke or odor has stopped, contact your dealer for repairs. Never attempt to make repairs yourself because this is dangerous.

✧ Do not use this projector if there is no image or sound, or if the sound is distorted. Continued use could result in fire or electrical shock. In such case, immediately turn off the power switch; disconnect the power plug from the power outlet and contact your dealer.

✧ If water should enter the inside of this projector, immediately turn off the power switch, disconnect the power plug from the power outlet and contact your dealer.

□ **Do not install on an unstable surface.** Do not install this projector on an unstable surface such as a wobbly stand or incline because this could result in the projector falling and causing injury.

□ **Do not open the cabinet.** Never open the cabinet. There is high voltage inside which can cause electrical shock. Contact your dealer for internal inspection, adjustment and repair.

□ **Do not modify.** Do not modify this projector because this could result in fire or electrical shock.

□ **Do not use in the bathroom.** Do not use this projector in the bathroom because this could result in fire or electrical shock.

□ **Do not insert objects into the project.**

✧ Do not insert metal objects through the ventilation openings, etc., of this projector or drop such objects inside because this could result in fire or electrical shock.

✧ **If a foreign object should enter this projector, immediately turn off the power switch, disconnect the power plug from the power outlet and contact your dealer.**

✧ Continued use could result in fire or electrical shock. Use special caution in households where children are present.

Warning

□ **Do not look through the lens when the lamp is on.** Never look through t he lens when the lamp is on. The powerful light could adversely affect vision. Use special caution in households where children are present.

□ **Avoid shock or impact on the projector.**

✧ If the projector should fall, resulting in damage to the cabinet, immediately turn off the power switch, disconnect the power plug from the power outlet and contact your dealer.

✧ Continued use could result in fire or electrical shock.

□ **Do not place this projector in a container containing liquid. Do not place flower vases, flowerpots, cups, cosmetics, liquids such as water, etc., on top of this projector.**

□ **Do not use any power cable except those supplied with the projector.** The use of any other power cable could result in fire or electrical shock.

□ **Do not shine the laser beam onto yourself or other.**

✧ The laser pointer function of projector remote control emits class Ⅱ laser beam.

✧ Do not look directly into the laser beam outlet or direct the laser beam at other people. Vision can be impaired if the laser beam enters the eyes. Especially pay attention if children are present.

□ **High temperatures are generated when the lamp is lit; so do not place objects in front of the lens**.

Caution

of balance or falling and cause personal injury or damage the projector.

□ **Do not block the ventilation openings.**

□ **Do not block the ventilation openings of this projector.**
Blocking ventilation could lead to internal overheating which could result in fire.

✧ Do not place this projector on its side during use or push it into a small, poorly ventilated location.

✧ Do not place this projector on a carpet or bedding or cover it with a tablecloth, etc. Also, when installing this projector, make sure the ventilation openings are at least 30cm(12in) clearance around the projector.

□ **Care and maintenance.** For safety purposes, disconnect the power plug from the power outlet before starting the care and maintenance of this projector.

□ **Battery usage.**

✧ **Replace the batteries with the same type only.** Do not mix old and new batteries; this could result in fire or personal injury due to battery cracking or leakage.

✧ **Make sure the plus and minus terminal s are correctly aligned when loading the batteries.**

✧ Incorrect loading could result in personal injury or contamination of the surroundings due to battery cracking or leakage.

□ **Have the projector interior cleaned regularly.**

□ **Contact your dealer to arrange for the service.**
Accumulations of dust inside the projector can result in fire or malfunction if not cleaned for an extended period.

□ **Ask your dealer for details about internal cleaning.**

Caution

- **Avoid installation in humid or dusty locations.**
  Do not install this projector in a humid or dusty location.
  This could result in fire or electrical s hock.

- **Do not handle the power cord roughly.**

- **Keep the power cord away from heaters;** the heat could melt the power cord and cause fire or electrical shock.

- **Do not touch the power plug with wet hands;** this could result in electrical shock.

- **When disconnecting the power plug, do not pull on the power cord.** This could damage the power cord and cause fire or electrical shock. Always grip the plug when disconnecting.

- **When the projector is not to be used for an extended period.** If the projector is not to be used for an extended period because of travel, etc., disconnect the power plug from the power outlet and replace lens cover.

Location of product safety labels

Safety labels are used on or within the projector to alert you to items or areas requiring your attention.

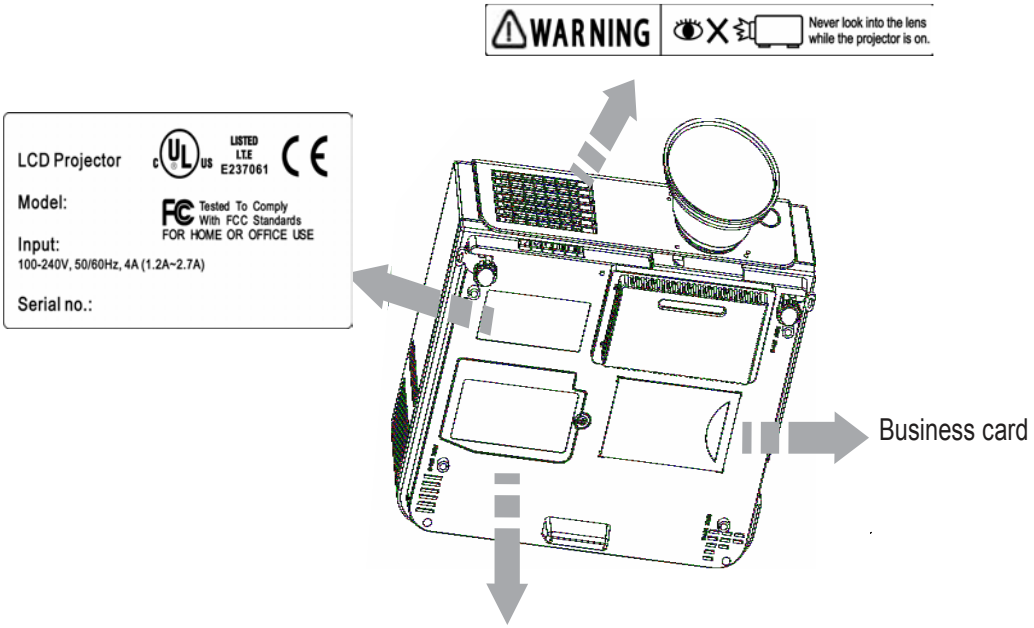

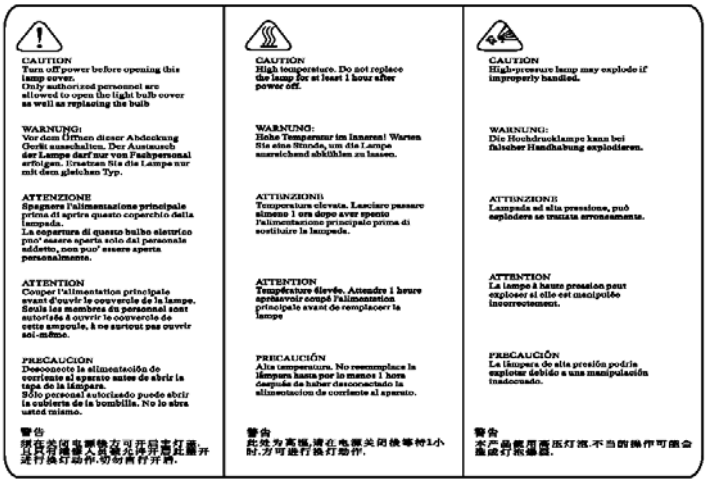

Checking the Package Contents

☐Projector

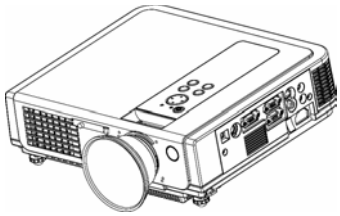

☐Remote Control
(included battery)

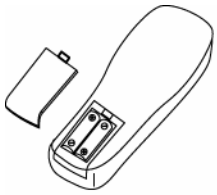

☐Power Cord

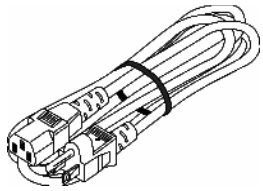

☐S-Video

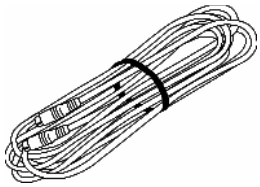

☐Video Cable

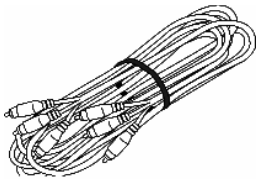

☐Computer cable

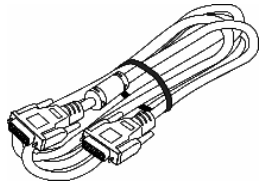

☐Speaker Cable

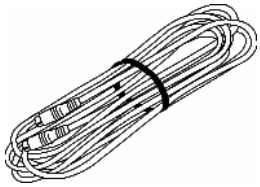

☐Audio Cable

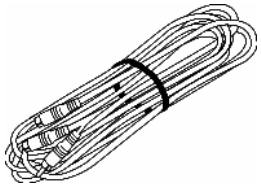

☐USB Cable

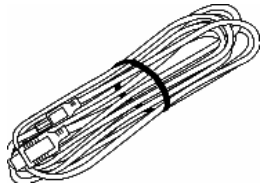

☐RS232 (Optional)

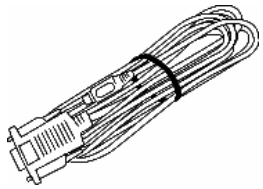

☐Carrying Bag
(Optional)

☐Quick Start Guide
(included CD)

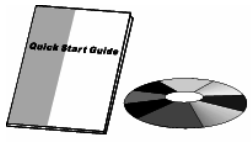

☐Filter Sponge

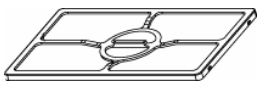

☐Convergence Lens

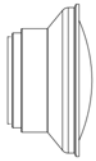

Part Names and Function:

Main Unit

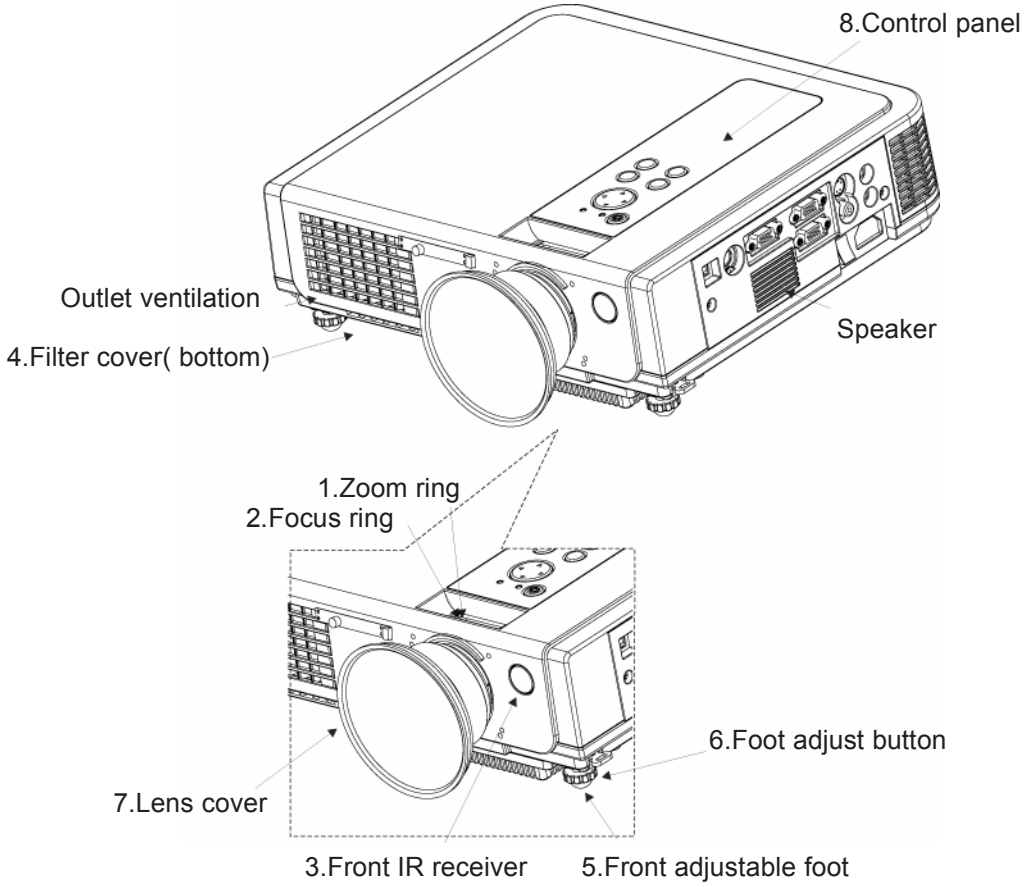

1. Zoom Ring

Use the Zoom Ring to adjust the size of the projected image.
Rotate the Zoom Ring until the image is the desired size.

2. Focus Ring

Use the Focus Ring to focus the projector image.
Rotate the Focus Ring until the image is clear.

3. Front IR receiver

When using the remote control, point the remote control at this sensor.

4. Filter cover

Prevents dust and other foreign particles from being drawn into projector.
Remove the Filter cover to clean the air filter.

5.Front adjustable foot
Extend and retract to adjust the projection angle

6.Foot adjust button
Lock/unlock the adjustable foot.

7.Lens cover
Attach when not using to protect the lens from becoming dirty or damaged.

8.Control panel (key pads)
Operating system.

Keypad control

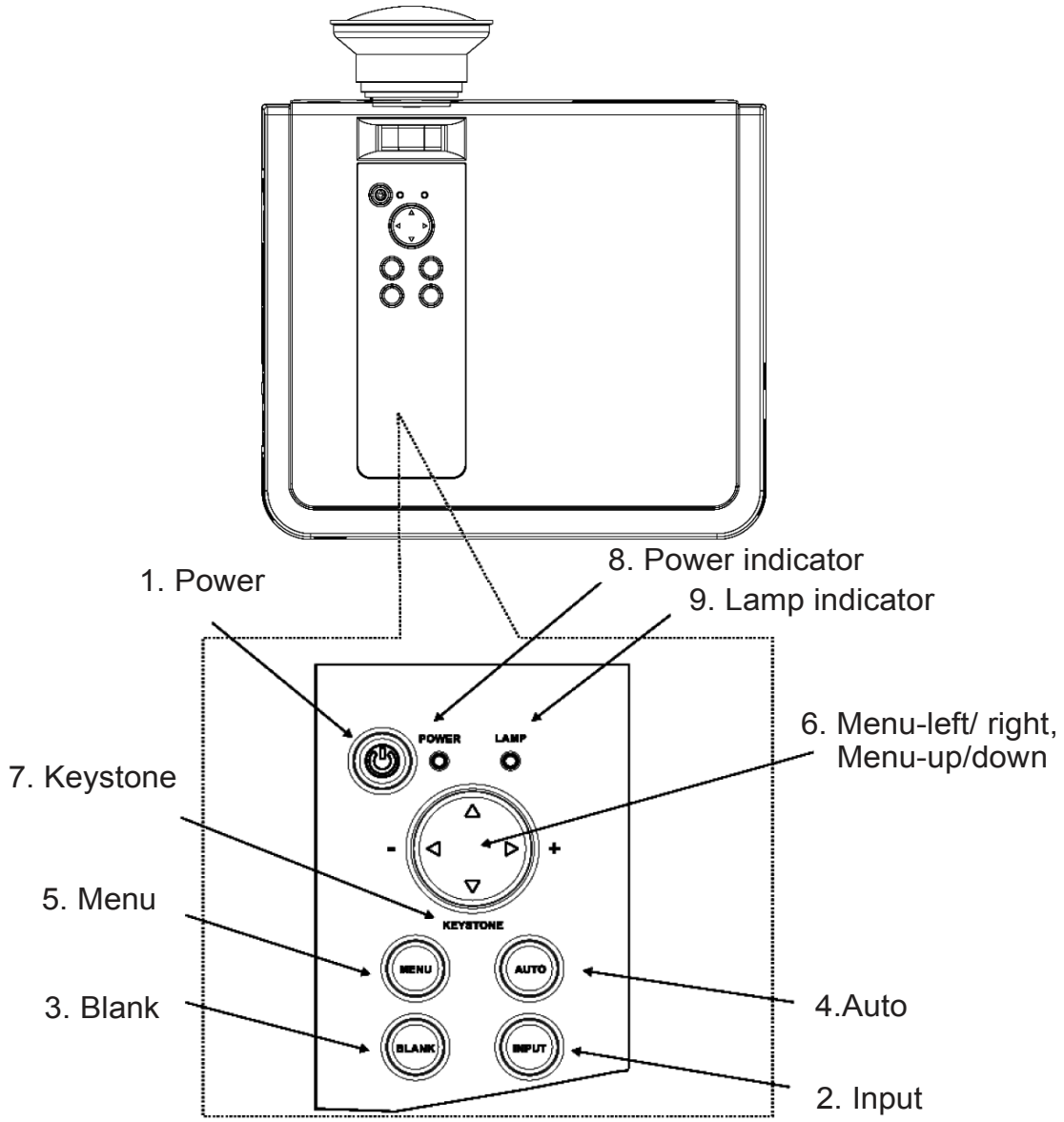

1.Power button

Power on / operation mode, Standby mode, Cooling-down mode
Brightness function,when sensor detects the surrounding light lower than 150 lux,"power button"will flash blue.

2. INPUT Computer source

Selects between RGB input source-
Computer 1 → Computer 2(RGB or YPbPr) → AV → S-Video → Computer1
System will auto detect YPbPr or RGB signal in computer 2 port.

3. Blank
Blanks the projected image. If the projector is left in blank mode for more than 15 minutes, the projector will automatically shut down.

4. Auto
Automatically adjusts the setting to match the current input.

5. Menu
Display or hides the OSD main menu

6.Menu-up /down, Menu-right / left
Selecting OSD menu item up or down.
Selecting and adjusting the function of OSD menu item

7. Keystone
Adjusts the vertical keystone with menu-right,

8.Power indicator
Lights on or flashes to indicate the operating status of the projector (See Page 49)

9. Lamp indicator
Indicate a problem in the internal projector temperature, lamp cover or cooling down. (See Page 50)

Rear View / IO Board

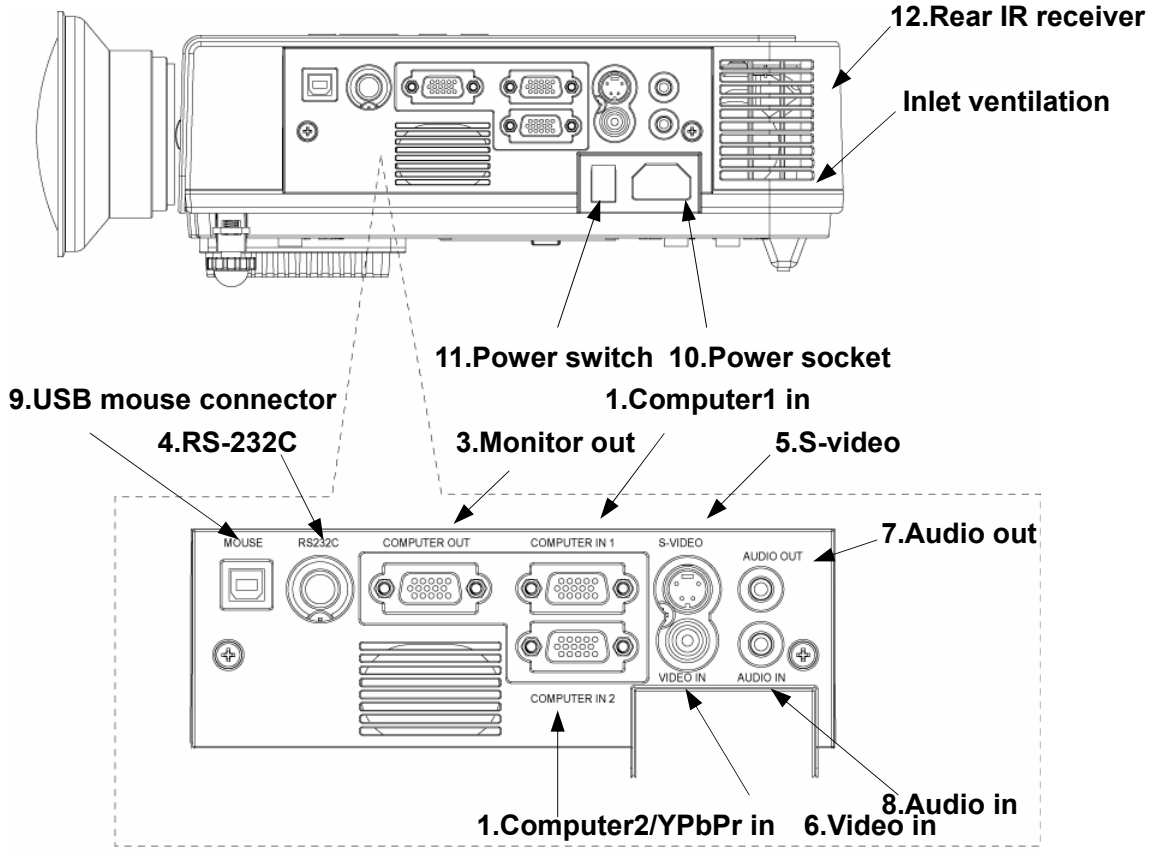

1. Computer in 1
Input Analog RGB video signal from a computer

2. Computer in 2 /YPbPr
When input signal from computer 2, it may encounter incorrect picture color. Please press "Auto" button again. The picture will be corrected.

3. Monitor out connector
Connect an external monitor to this connection view the Computer1 input.

4. Control (RS-232C)
Serial data port for controlling the projector with a computer or other RS-232 control device.

5. S-Video connector
S-Video signal from a video source.

6. Video in
Component video signal from a video source.

7. Audio out
Connecting to an external speaker system.

8. Audio in
Stereo mini jack for PC input

9. USB mouse connector
Connects a USB mouse cable to a computer to control computer mouse functions.

10. Power socket
Connects the power core to this connection.

11. Power switch
Turns the power on/off.

12. Rear IR receiver
When using the remote control, point the remote control at this sensor.

Bottom View

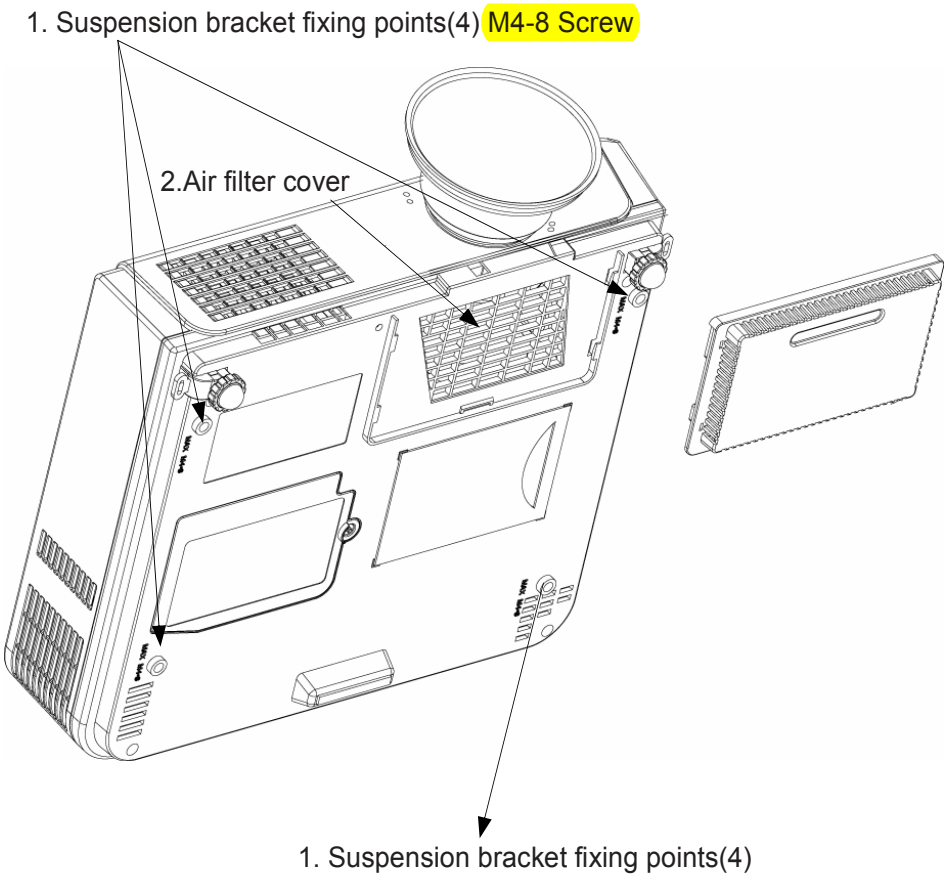

1. Suspension bracket fixing points (4 points)
Install the optional ceiling mount here when suspending the projecto from the ceiling.

2. Air filter cover
Prevents dust and other foreign particles from being drawn into the projector.

Remote Control

1.Power
Power on / operation mode, Stand by mode, Cooling-down mode

3.Mouse Left
Mouse left multipurpose key.

5.Menu
Display or hides the OSD main menu page.

8.Keystone up /down
Adjusts the horizontal Key stone function

10.Input
Selects between RGB input source-computer1, computer2

11.ESC
Press ”ESC” button, it will close ”Menu” picture

12.Auto Sync
Refresh the current image.

13.Blank
Hide the current image, Become black color on the screen

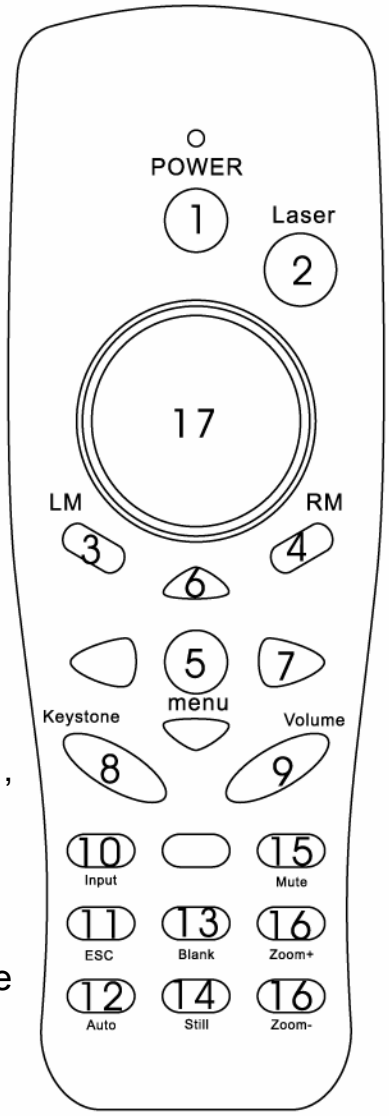

14.Still
Keep the current image on the screen.

2.Laser pointer
Use laser pointer from remote control.

4.Mouse Right
Mouse right multipurpose key.

6.Menu-up / Menu-down
Selects OSD menu item up or down

7.Menu-right / Menu-left
Selecting and adjusting the function of OSD menu item

9.Volume up / down
Sound louder or lower

15.Mute
Mute audio

16.Zoom in / Zoom out
Zoom in or zoom out

17. Point button
Select an item or adjusts value in the On-Screen Menu.

Inserting the batteries

Loading AAA batteries into the remote control.

1. Remove the battery cover.
Push the knob while lifting up the battery cover.

2. Loading the batteries.
Make sure the plus and minus poles are correctly oriented.

3. Close the battery cover.

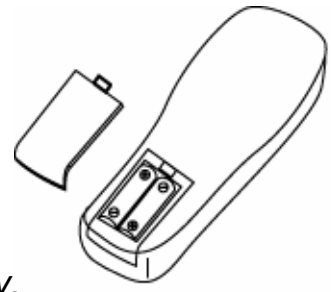

Caution

- *Avoid excessive heat and humidity.*
- *Do not drop the remote control.*
- *Do not expose the remote control to water or moisture, this could result in malfunction.*
- *When the remote control will not be used for an extended period, remove the batteries.*
- *Replace the batteries when remote control becomes sluggish or unresponsive.*
- *Do not place the remote control close to the cooling fan of the projector.*
- *Do not disassemble the remote control .if the remote control needs service. Please bring it to the service station.*

Warning

The laser pointer function emits a class Ⅱ laser beam. Do not look directly into the laser beam outlet or point the laser beam at other people. Vision can be impaired by shining the beam in to the eyes.

Installation

Setting Up the Projector

The projector supports the following four different projection methods

- **Front projection**

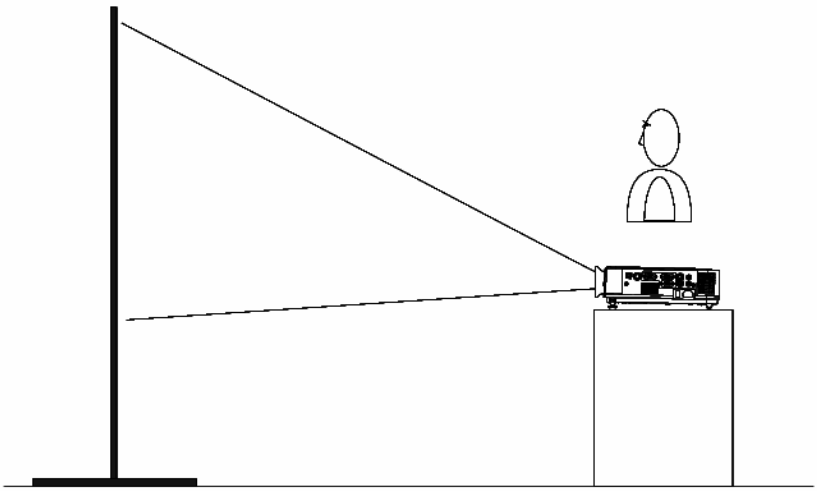

- **Rear**

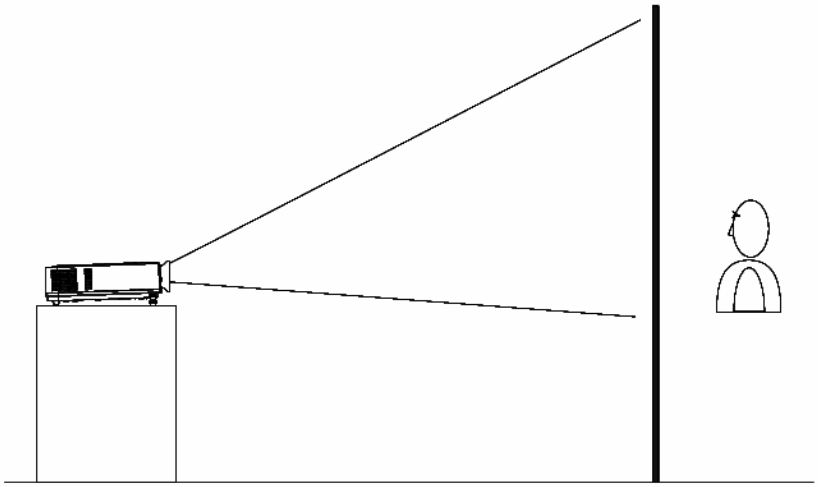

➢ *A special method of installation is required in order to suspend the projector from the ceiling. Please ask your dealer for details.*

- **Rear ceiling projection**

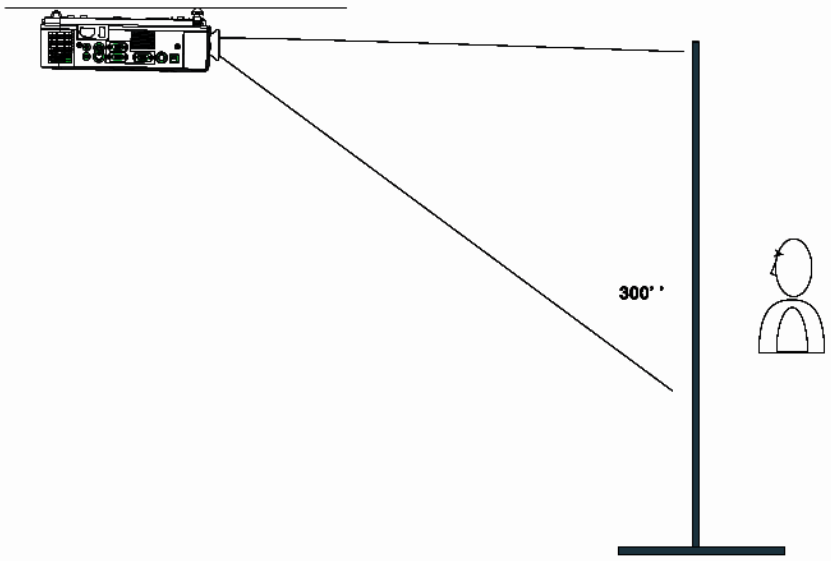

- **Front ceiling projection**

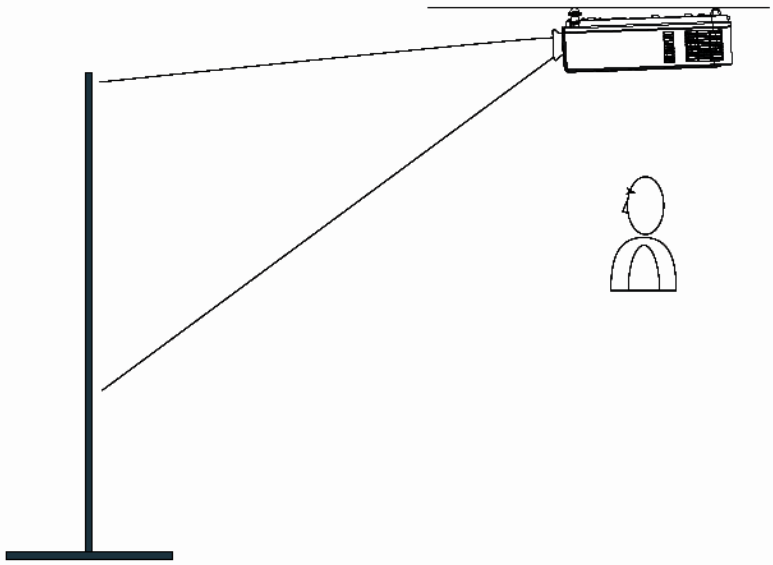

➢ *A special method of installation is required in order to suspend* the projector *from the ceiling. Please ask your dealer for details.*

Screen Size and Projection Distance

The distance between the projector and screen determines the actual image size. Refer to the table below to determine the image size at a given distance.

Screen (inch)	Distance (m)	
	Tele	Wide
40	0.96	0.78
60	1.45	1.19
80	1.95	1.6
100	2.44	2.02
150	3.68	3.05
200	4.92	4.08
300	7.4	6.15

Adjusting the Image Position

Use the adjustable foot at the front of the projector to set the image height. Rotate the adjustable foot at the rear of the projector to fine-tune the image position.

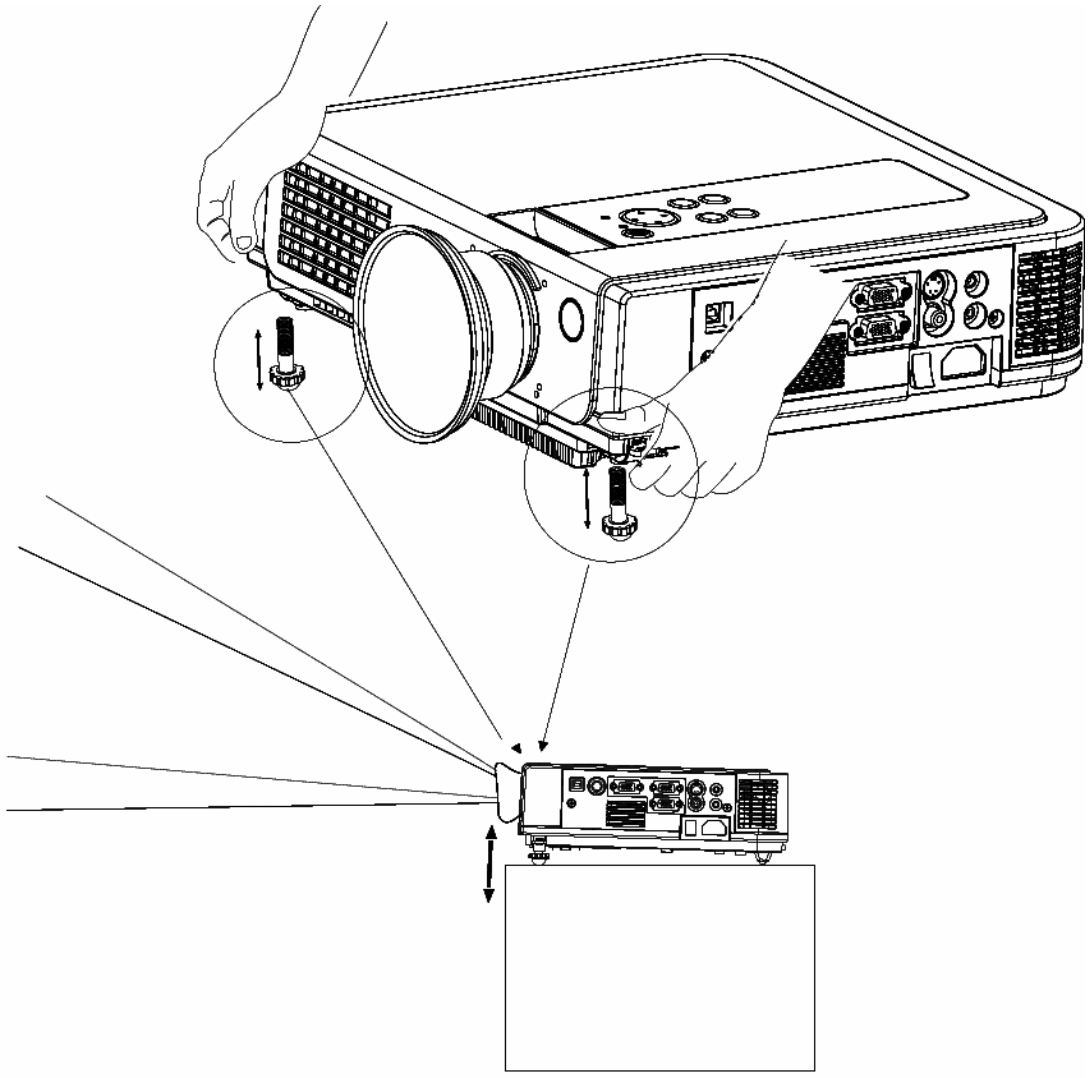

✧ *When the foot is adjusted, it may cause the shape of the projected image to become distorted. Use the keystone correction function to correct this distortion.*

✧ *To retract the front adjustable foot, press the foot release button. The front adjustable foot will slowly retract inside the projector.*

Moving the projector (optional)

1. Use the carrying handle when moving the projector.(option)
2. Replace the lens cover and retract the front adjustable foot when moving the projector to prevent damage to the projector.

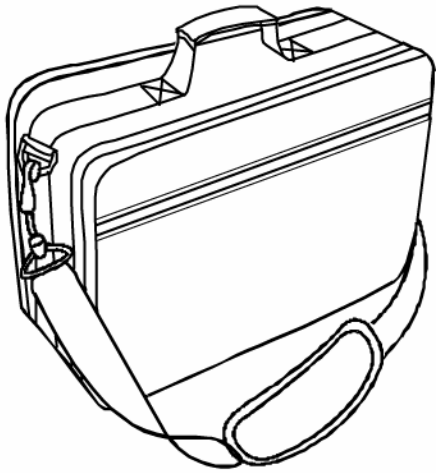

Caution

- *The optional carry bag is intended to protect the projector from dust and scratches on the surface of the cabinet. It is not designed to protect the projector from external shock.*
- *Do not transport the projector in an unsuitable transport case when using a courier or transport service. This may cause damage to the projector.*

Carrying bag

(Optional, please contact your for more information)

How to Connect

Before starting, make sure that the projector and computers are both turned off.

1. Connect the computer cable.

1.1 Connect either end of the computer cable to the projector's computer 1/ computer port.

1.2 Disconnect the monitor cable from the computer and connect the other end of the terminal where the monitor cable is disconnected from the computer.

1.3 If needed, connect the monitor cable of the computer monitor to the projector's Computer out.

1.4 Tighten the screw on all connectors.

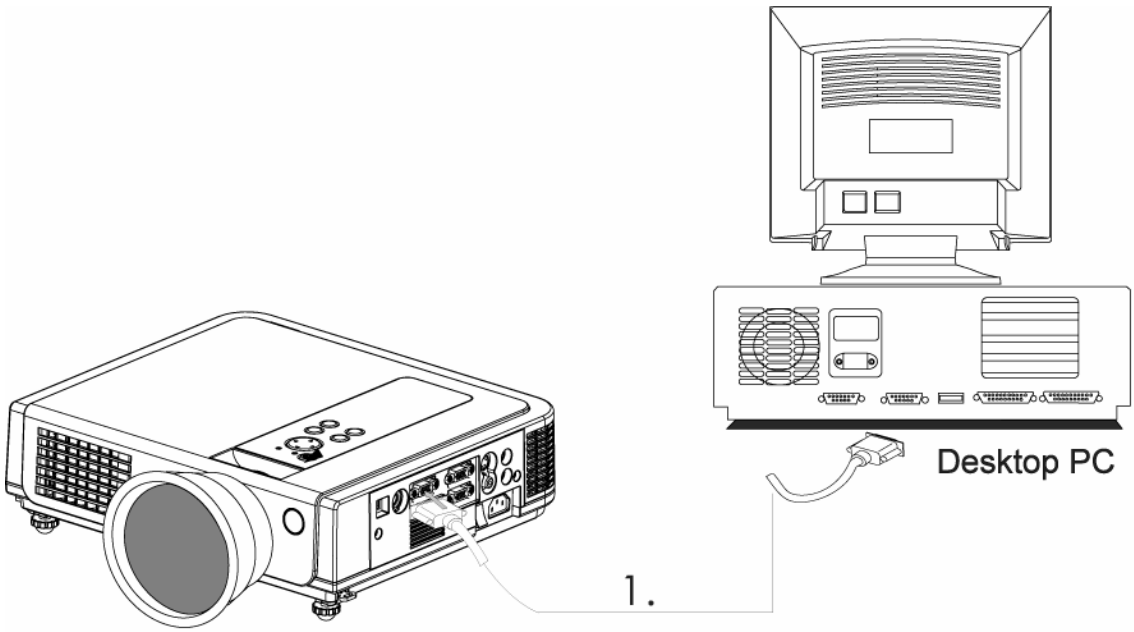

.Connect the audio cable if necessary.

2.1 Connect one end of the audio cable to the Audio in jack on the projector.

2.2 Connect the other end of the audio cable to the audio output port on the computer sound card.

Laptop PC

A PC laptop computer

Before beginning, make sure that the projector and computers are both turned off.

1. Connect the computer cable.

1.1 Connect either end of the computer cable to the projector's computer 1or computer 2 port.

1.2 Connect the other end of the project cable to the monitor out connection on the laptop.

1.3 Tighten the all connectors.

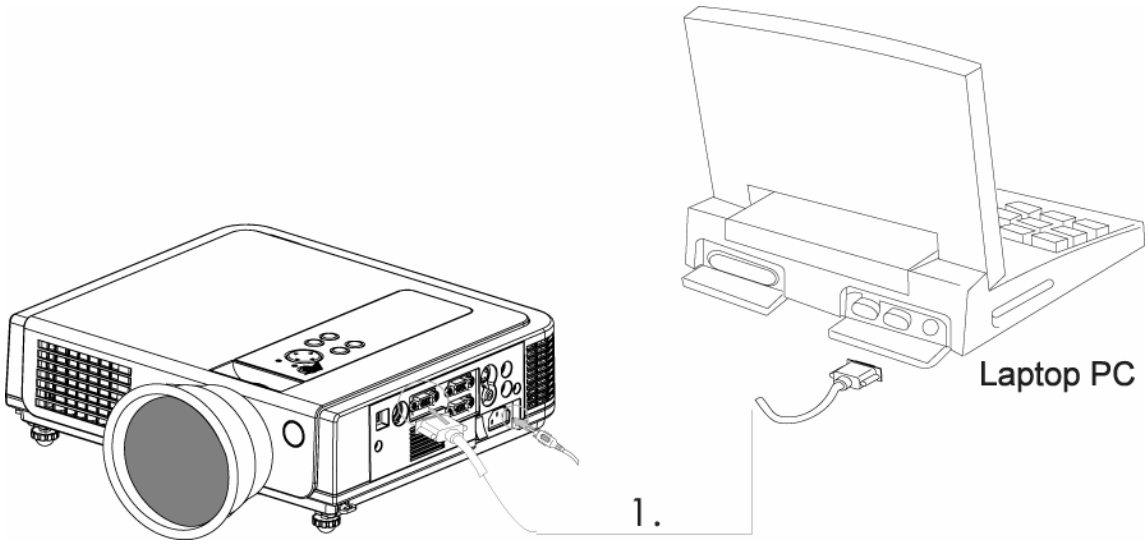

2. Connect the audio cable if necessary.

2.1 Connect one end of the audio cable to the Audio in jack on the projector.

2.2 Connect the other end of the audio cable to the audio output port on the laptop PC.

USB Mouse_

USB mouse compatible MS-Window98/2000/NT/XP/Me,
Macintosh :OS8.6~10.1, and a Microsoft Mouse driver installed.

1. Insert the end of the USB Cable (B-Type) to the projector's USB port.
2. Connect the end of the USB Cable (A-type) to the computer's USB port.
3. When the projector and computer are turned on, the appropriate drivers should load automatically.

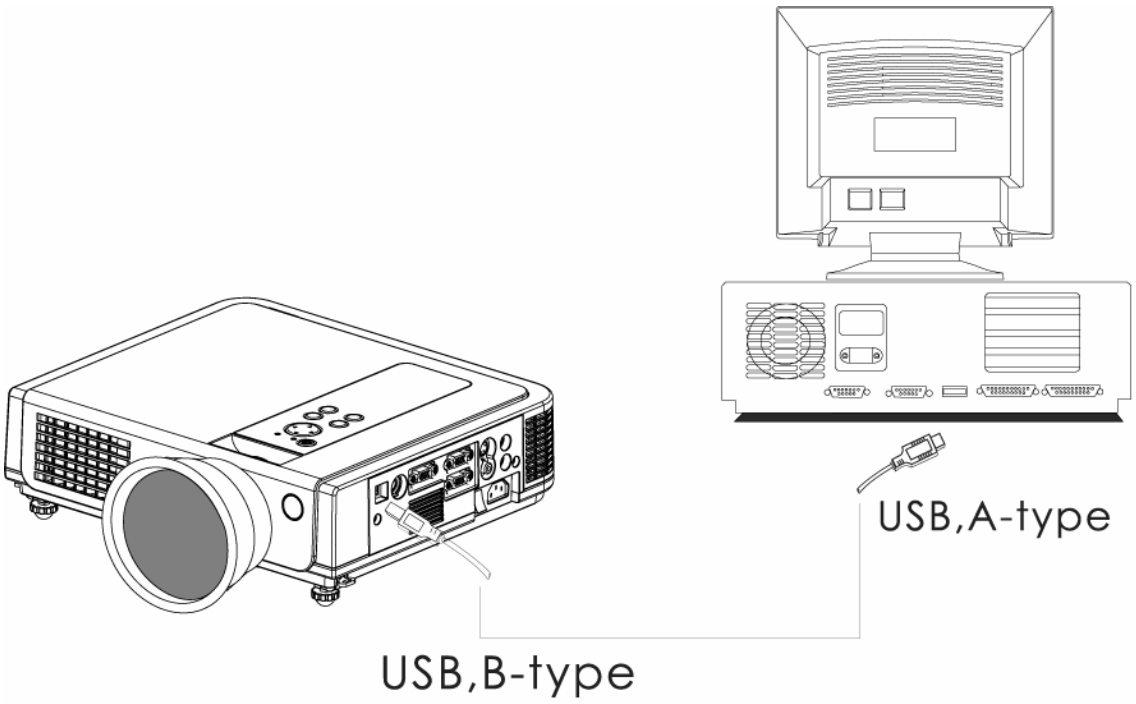

Video

A Connect to a video source

The Projector can receive composite AV ,YPbPr and S-Video.

1. Connect RCA plug at projector and video source (like DVD player) for video signal.

2 . Connect RCA plug (white and red) to audio source (like DVD player) and connect the phone jack to projector for audio signal.

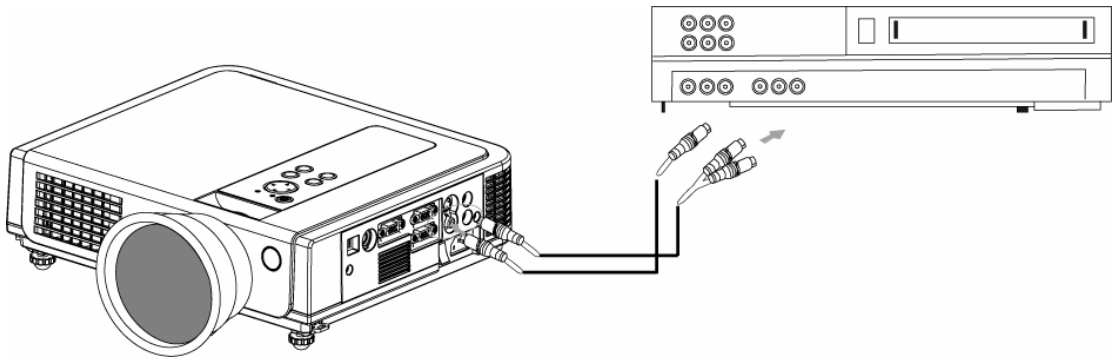

3 . Connect YPbPr plug at projector computer in2 port and video source (like DVD player) for video signal.

4 . For S-Video, using S-Video cable connect to projector and video source for video signal.

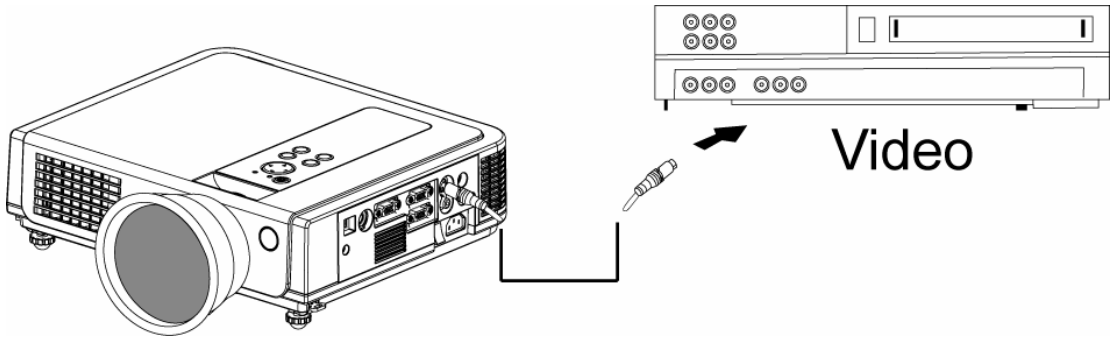

Basic Operation

Turning on the projector

Procedure

1. Check the power is turned off for the projector and all components connected to the projector.
2. Remove the lens cover.
3. Connect the power cord to the projector.
4. Turn on the power switch.
5. Press the button on the control panel or [POWER] button on the remote control.

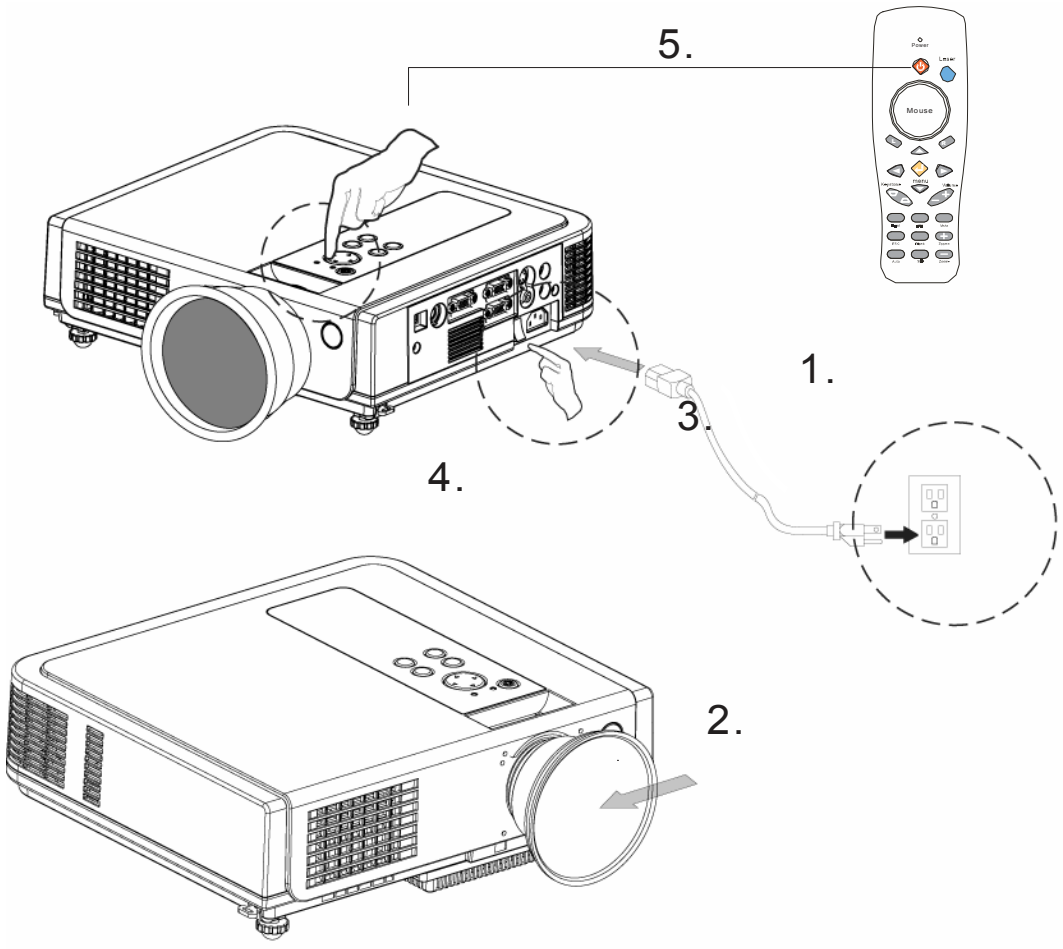

6. The power indicator will flash green.
7. Press the [VIDEO]/[PC] button on the control panel or the Computer/Video buttons on the remote control to select the appropriate source.

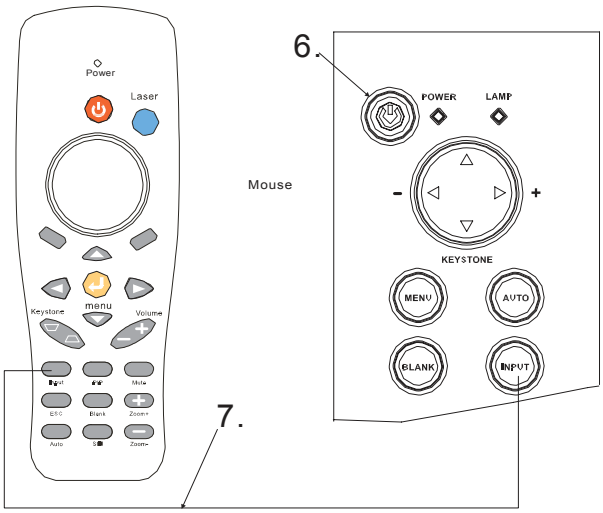

8. Use the zoom ring to adjust the screen size.
9. Use the focus ring to adjust the focus.

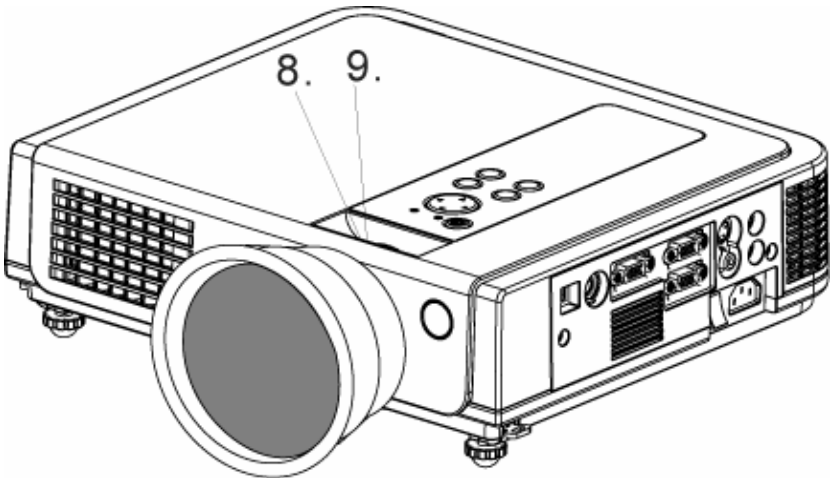

Adjust the Screen Image

1. Adjusting the image size

Turn the zoom ring on the projector to adjustor to adjust the image

2.Adjusting the image height.

Extend or retract the front adjustable foot to adjust the height of the image.

3.Correcting Keystone Distortion

Use the [Keystone] button on the projector's control panel.

*Correcting vertical keystone distortion

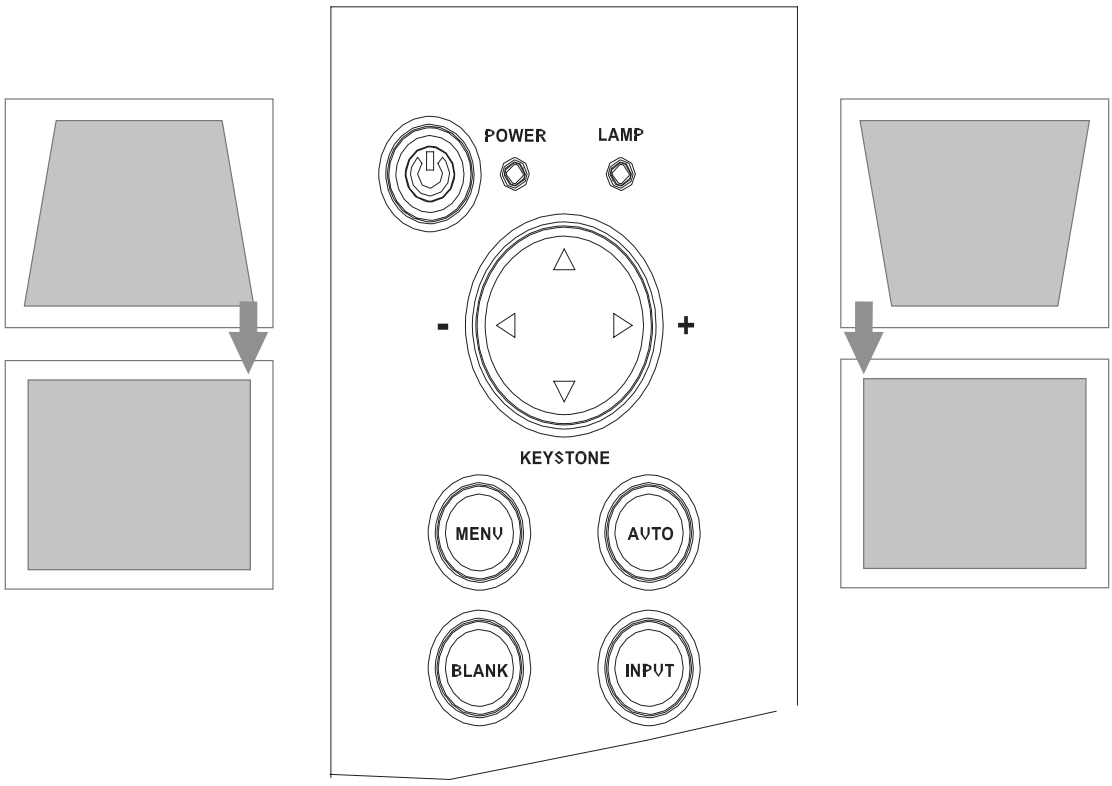

Turning off the projector

1. Press the power button on the projector or r emote control. The power off confirmation message appears .I f you do not wan t to power off the projector, ignore the message and it will disappear.

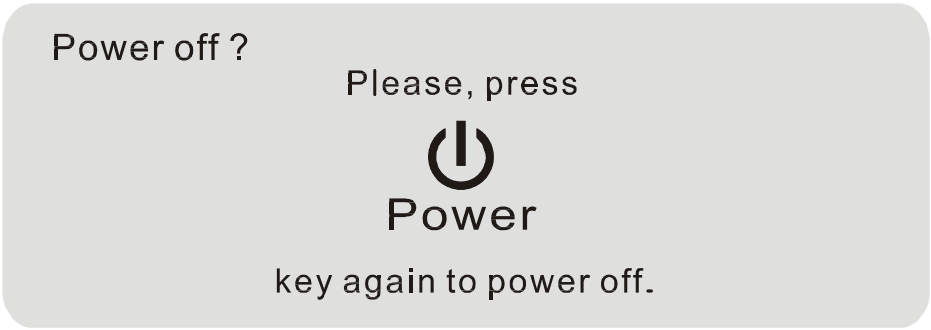

2. Press the power button again and the projector will enter cool-down mode. The lamp shuts off, the lamp indicator flashes red, and the fans continue to run for approximately two minutes. During the cool down sequence the projector will not respond to any control panel or remote control buttons.

Caution: Do not set the power switch to off or unplug the projector during the cool-down sequence. Not allowing the lamp to cool properly will greatly reduce the life of the lamp.

3. After the cool-down sequence is complete the fans will shut off and the lamp indicator will stop flashing. The projector is now in standby mode and can be turned back on with the remote control or control panel. If the projector will not be used for an extended period, set the power switch to off and disconnect the power cord.

Functions of Menu (OSD)

Keypad Operating:

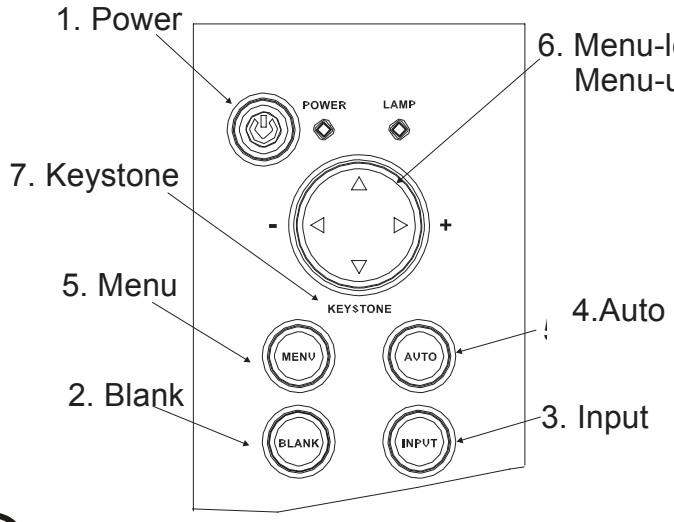

1. : Turn on and turn off the projector
2. **BLANK:** Blanks the projected image. If the projector is left in Blank mode for more than 15 minutes, the projector will automatically shut off the lamp and enter cool-down mode.
3. **AUTO:** Automatically adjusts the settings to match the current input.
4. **SOURCE:** Selects VIDEO or PC input source.
5. **MENU:** Enter or exit the main menu (Show and hide the OSD)
6. △ ▽ : Up / Down arrow buttons, used to navigate through the OSD Menus.
   ◁ ▷ : Right / Left arrow buttons, used to select and adjust OSD Menu functions.
7. **Keystone**: Adjusts the vertical keystone with the right and left arrow buttons.

***There is a "Quick Key" on the remote control and projector keypad as well.*

***Press the "Volume" button on remote control, you can adjust value, and select between Brightness – Contrast – Keystones – Volume directly.*

There is the same function for pressing the *button on the keypad*

Computer mode

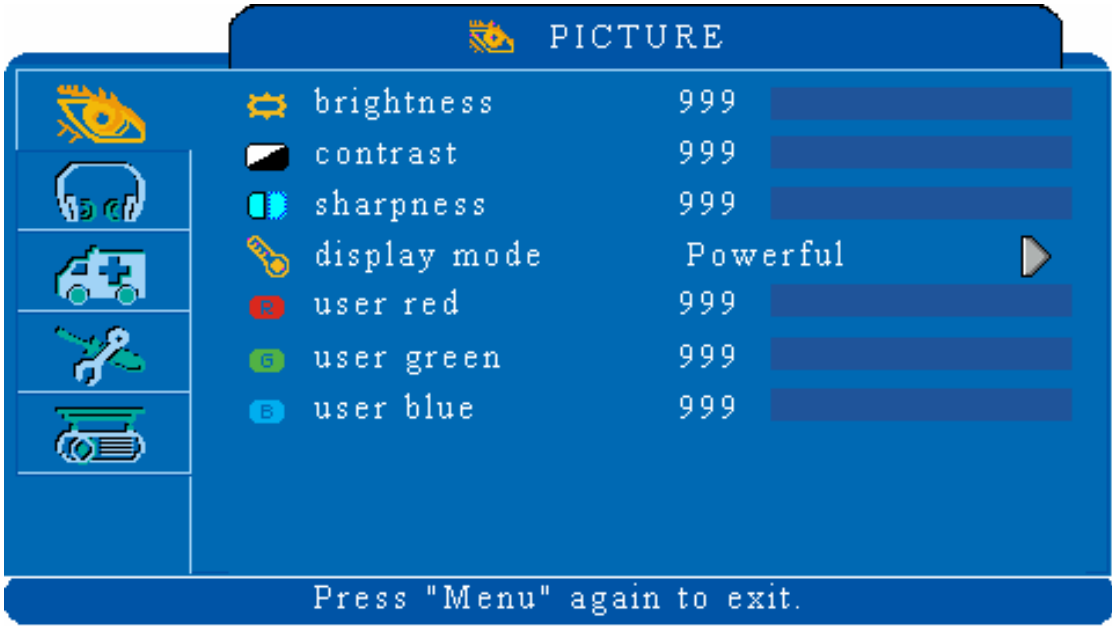

1. PICTURE		
Brightness	000/100	Adjusts the overall image brightness
Contrast	000/100	Adjusts the difference between light and dark areas of the image
sharpness	000/006	Adjusts the image sharpness
Display mode		Select
	Powerful Video Presentation Natural Cinema User	Enhance brightness Keep the soft tender color For computer presentation use Nature color Enhance contrast mode for Cinema mode adjustments of each RGB color
	User Red User Green User Blue	000/100 000/100 000/100

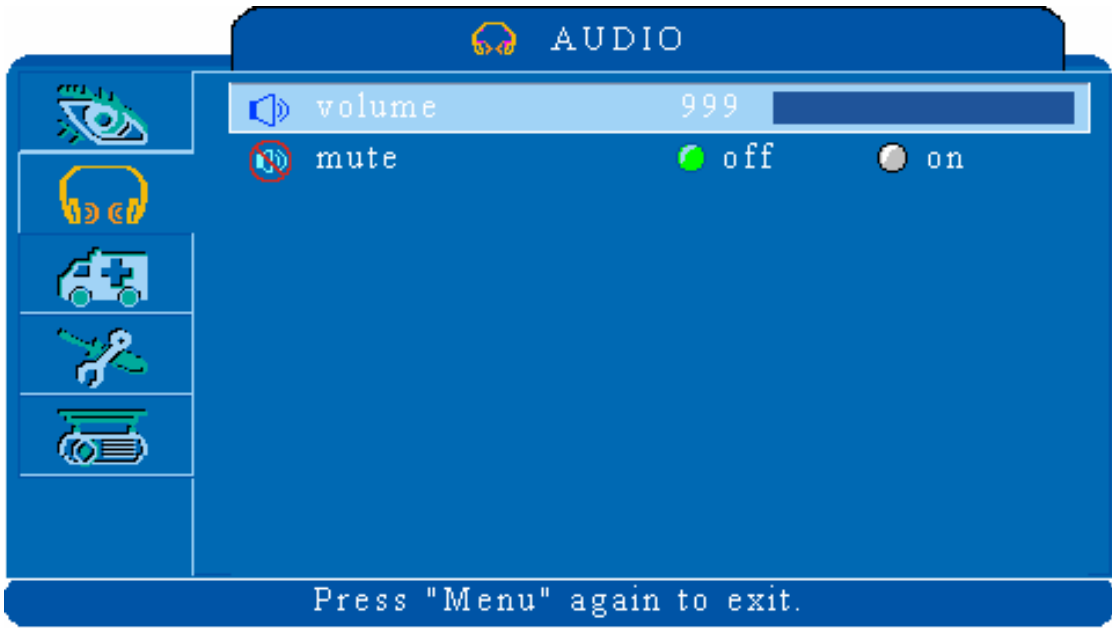

2. AUDIO		
Volume	000/040	Adjusts the volume
Mute	On/Off	Mutes the volume on/off

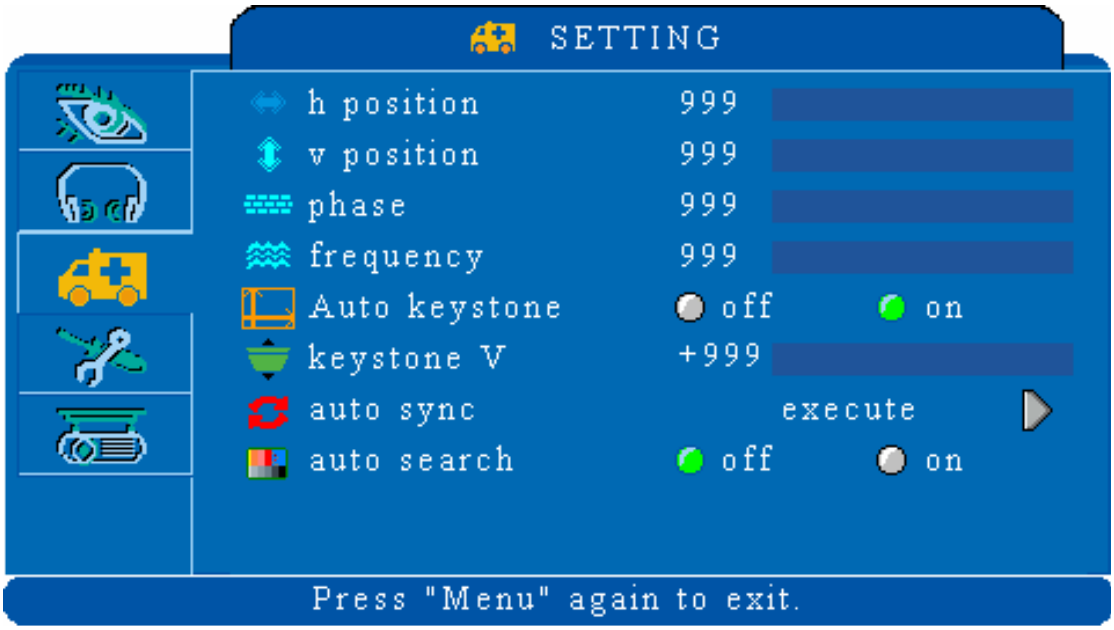

3.SETTING		
H position	000/100	Move the image position horizontally
V position	000/100	Move the image position vertically
Phase	000/100	Set the synchronization polarity
Frequency	000/100	Set the horizontal scanning frequency
Auto keystone	Execute	Automatically Corrects keystone distortion in image i.e. press once to do once
Keystone V	-80/+80	Corrects vertical keystone distortion in image
Auto sync	Execute	Sets all of the above settings automatically
Auto search	On/off	Search signal source automatically.

ADVANCED
zoom / pan
execute
still
off
on
blank
off
on
reset all
execute
resize
4 : 3
language
english
select source
execute
Press "Menu" again to exit.

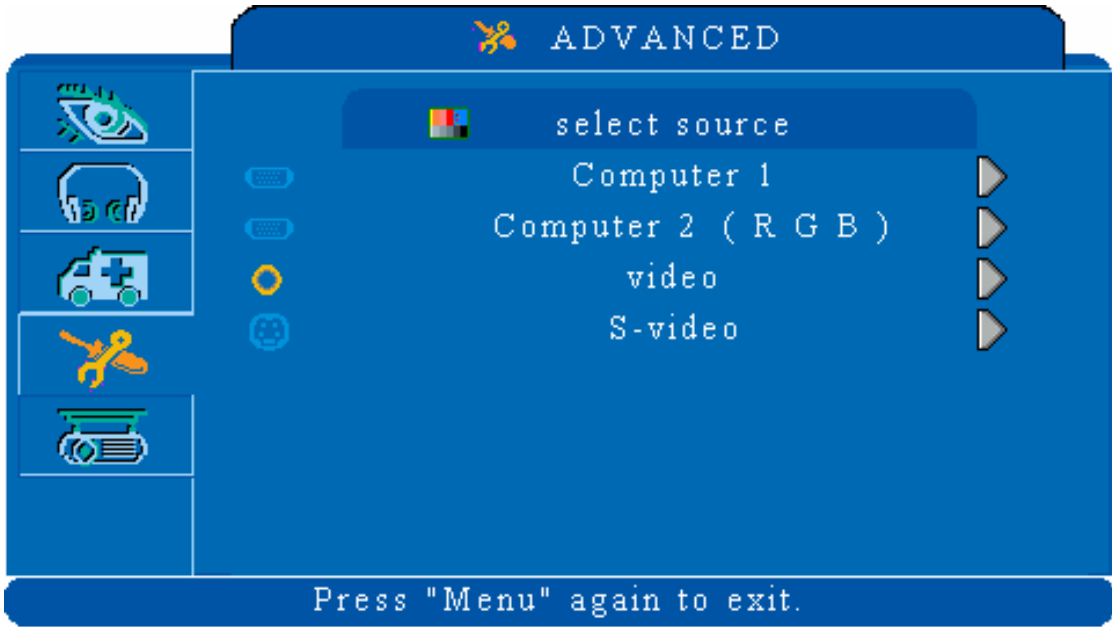
ADVANCED
select source
Computer 1
Computer 2 (R G B)
video
S-video
Press "Menu" again to exit.

4.ADVANCE		
Zoom/pan	Execute	Execute digital zoom and pan function
Still	On/Off	Freezes the current image on the screen.
Blank	On/Off	Hide the image, displays a blank, black screen*(see below)
Reset all	Execute	Resets all OSD Menu function to their factory default values*(see below)
Language	English	Select the language that the OSD Menu and on screen massage are display in English / Chinese(s) / Chinese(t) / Italian / Spanish / French / German / Korean / Polish
Select source		Select the input source from: Computer 1 / Computer 2 (RGB or YPbPr) / Video / S-video

■ **Blank on**

If the projector is left in Blank mode for more than 15 minutes, the projector will automatically shut off the lamp and enter cool-down mode.

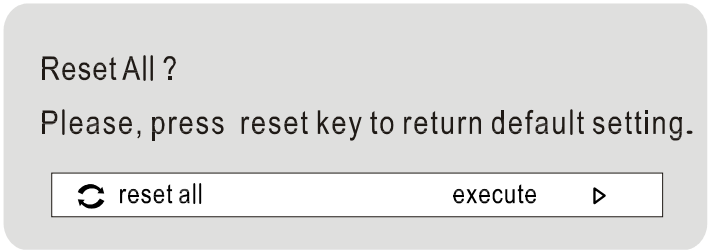

■ **Reset all**

1. After you select [reset all] on the OSD menu, the following confirmation message will appear on the screen.

2. Press reset button on the remote control or the button on the keypad to reset the OSD Menu values. Press the ESC button or ignore the message to exit the Reset All function without changing any settings.

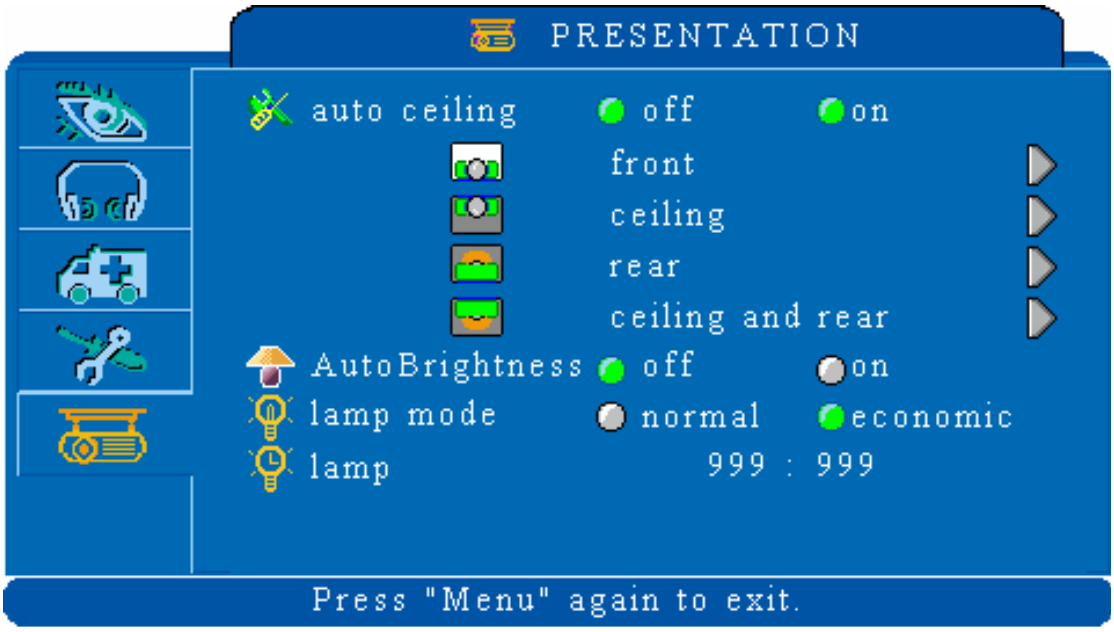

5.PRESENTATION		
Auto ceiling	On/off	Automatically inverts the image when the projector is turned upside down i.e. when the projector is mounted on the ceiling
Front	Execute	Normal projection mode
Ceiling	Execute	Inverts the image vertically, used when the projector is mounted upside down
Rear	Execute	Inverts the image horizontally, used when projecting onto a rear projection screen
Ceiling and Rear	Execute	Inverts the image horizontally and vertically, used when the projector is mounted upside down and projecting onto a rear projection screen
Auto Brightness	Normal Economic	Auto detects brightness; it turns to economic mode automatically when the brightness is low.
Lamp mode	Normal Economic	Economic mode reduces the lamp brightness economic to extend lamp life and quiet the projector
Lamp timer		Show Lamp timer

Video Mode

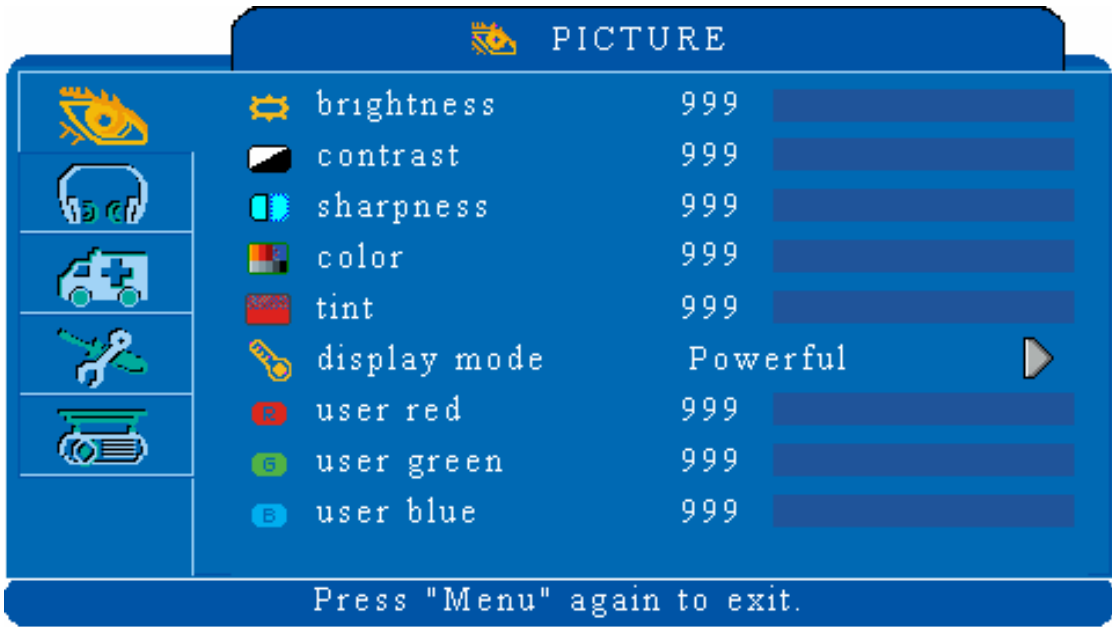

1. PICTURE		
Brightness	000/100	Adjusts the overall image brightness
Contrast	000/100	Adjusts the difference between light and dark areas of the image
sharpness	000/006	Adjusts the image sharpness
Color	000/100	Adjusts the image color
Tint	000/100	Adjusts the image tint
Display mode		Adjusts the color temperature of the image
	Powerful Video Presentation Natural Cinema User	Enhance brightness Keep the soft tender color For computer presentation use Nature color Enhance contrast mode for Cinema mode adjustments of each RGB color
	User Red User Green User Blue	000/100 000/100 000/100

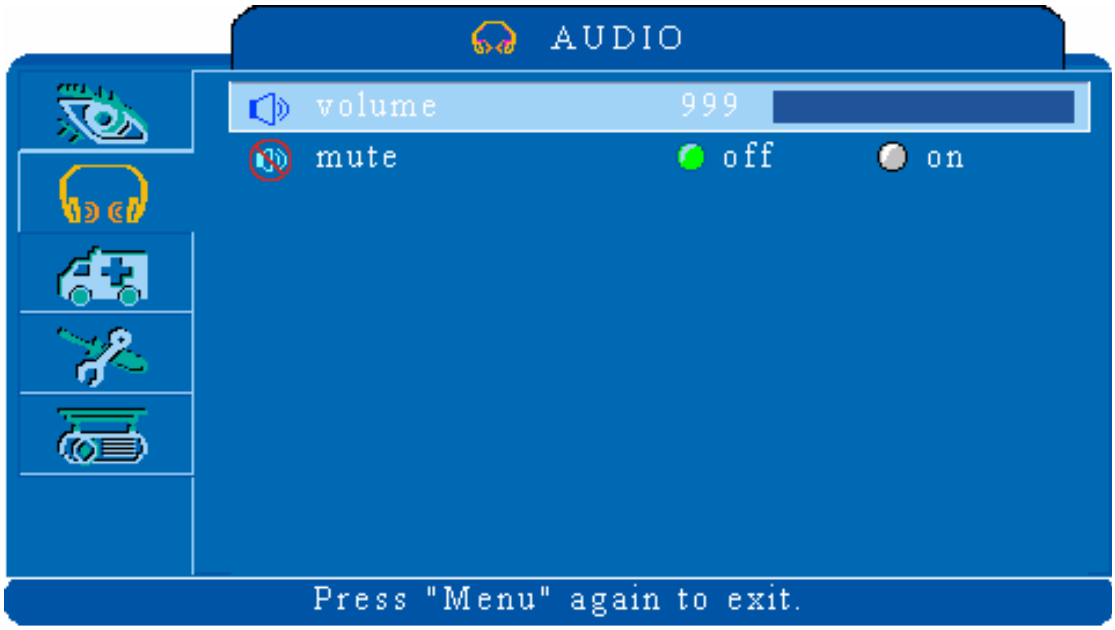

2. AUDIO		
Volume	000/040	Adjusts the volume
Mute	On/Off	Mutes the volume on/off

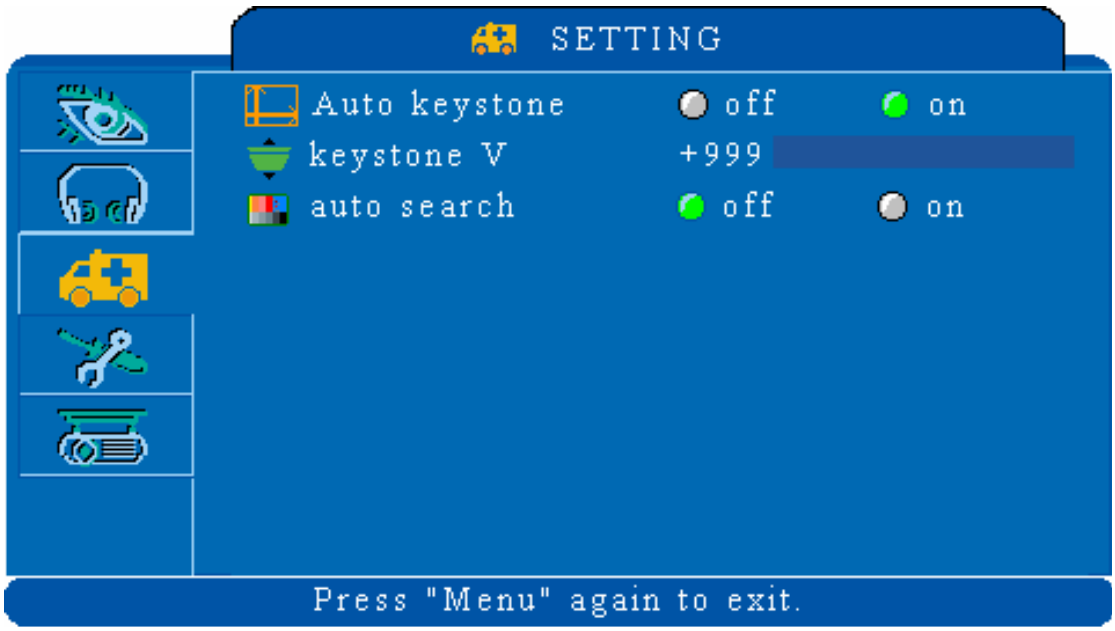

3.SETTING		
Auto keystone	Execute	Automatically Corrects keystone distortion in image i.e. press once to do once
Keystone V	-80/+80	Corrects vertical keystone distortion in image
Auto search	On/off	Search signal source automatically.

ADVANCED
zoom / pan
execute
still
off
on
blank
off
on
reset all
execute
resize
4 : 3
language
english
select source
execute
Press "Menu" again to exit.

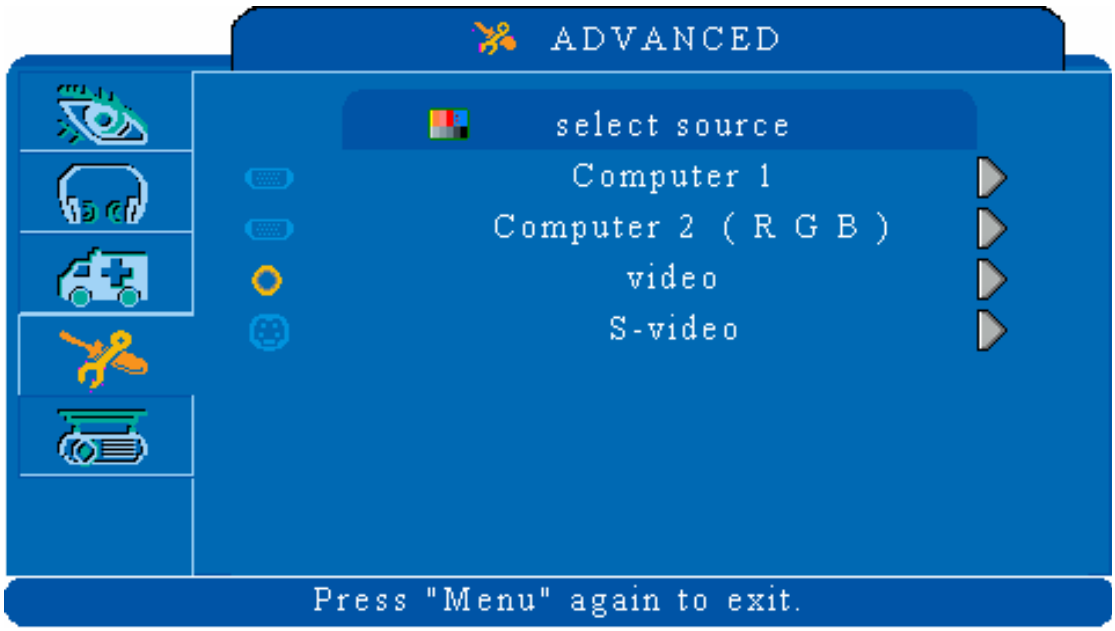
ADVANCED
select source
Computer 1
Computer 2 (R G B)
video
S-video
Press "Menu" again to exit.

4.ADVANCE		
Zoom/pan	Execute	Execute digital zoom and pan function
Still	On/Off	Freezes the current image on the screen.
Blank	On/Off	Hide the image, displays a blank, black screen*(see below)
Reset all	Execute	Resets all OSD Menu function to their factory default values*(see below)
Language	English	Select the language that the OSD Menu and on screen massage are display in English / Chinese(s) / Chinese(t) / Italian / Spanish / French / German / Korean / Polish
Select source		Select the input source from: Computer 1 / Computer 2 (RGB or YPbPr) / Video / S-video

■ **Blank on**

If the projector is left in Blank mode for more than 15 minutes, the projector

■ **Reset all**

1. After you select [reset all] on the OSD menu, the following confirmation message will appear on the screen.

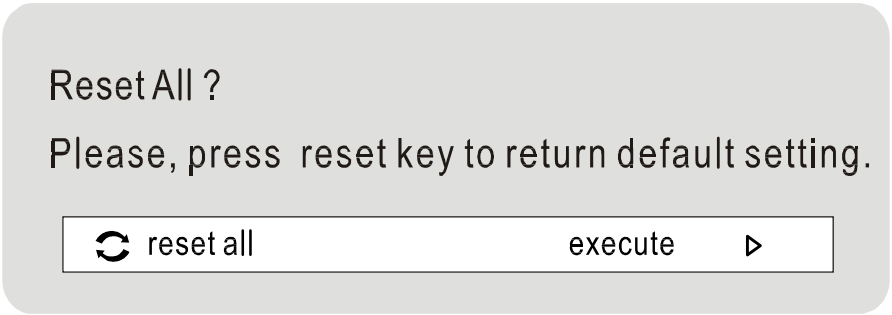

2. Press reset button on the remote control or the button on the keypad to reset the OSD Menu values. Press the ESC button or ignore the message to exit the Reset All function without changing any settings.

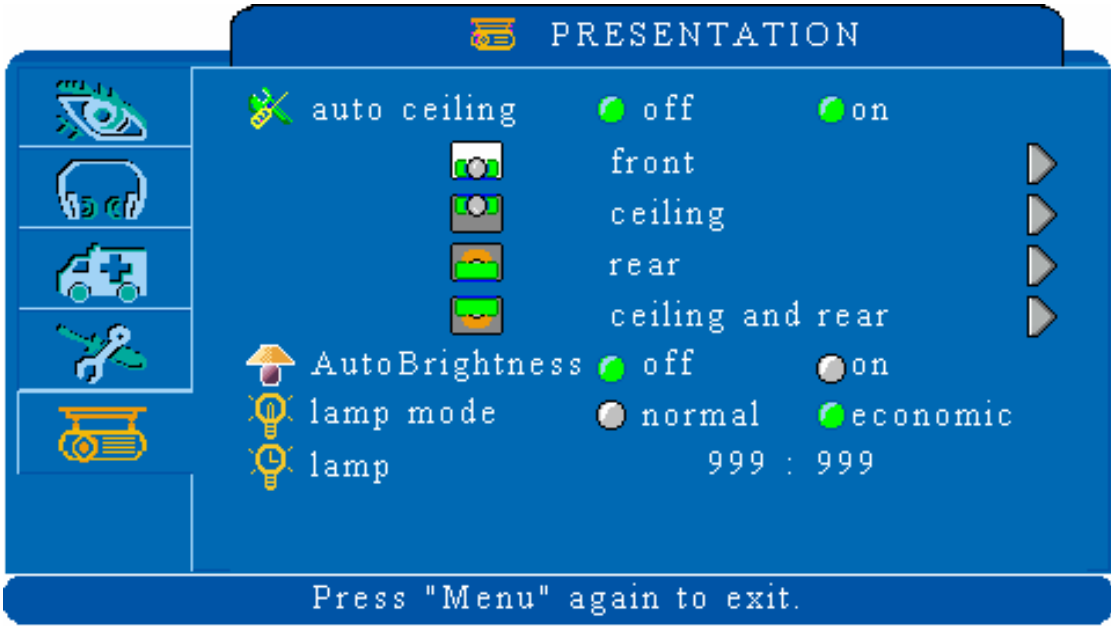

5.PRESENTATION		
Auto ceiling	On/off	Automatically inverts the image when the projector is turned upside down i.e. when the projector is mounted on the ceiling
Front	Execute	Normal projection mode
Ceiling	Execute	Inverts the image vertically, used when the projector is mounted upside down
Rear	Execute	Inverts the image horizontally, used when projecting onto a rear projection screen
Ceiling and Rear	Execute	Inverts the image horizontally and vertically, used when the projector is mounted upside down and projecting onto a rear projection screen
Auto Brightness	Normal Economic	Auto detects brightness; it turns to economic mode automatically when the brightness is low.
Lamp mode	Normal Economic	Economic mode reduces the lamp brightness economic to extend lamp life and quiet the projector
Lamp timer		Show Lamp timer

Ceiling Mounted Installation Guide

Attach the optional ceiling mount at four-suspension bracket fixing points when suspending the from a ceiling.

**A special method of installation is required in order to suspend the projector from the ceiling. Please ask your dealer for more details.*

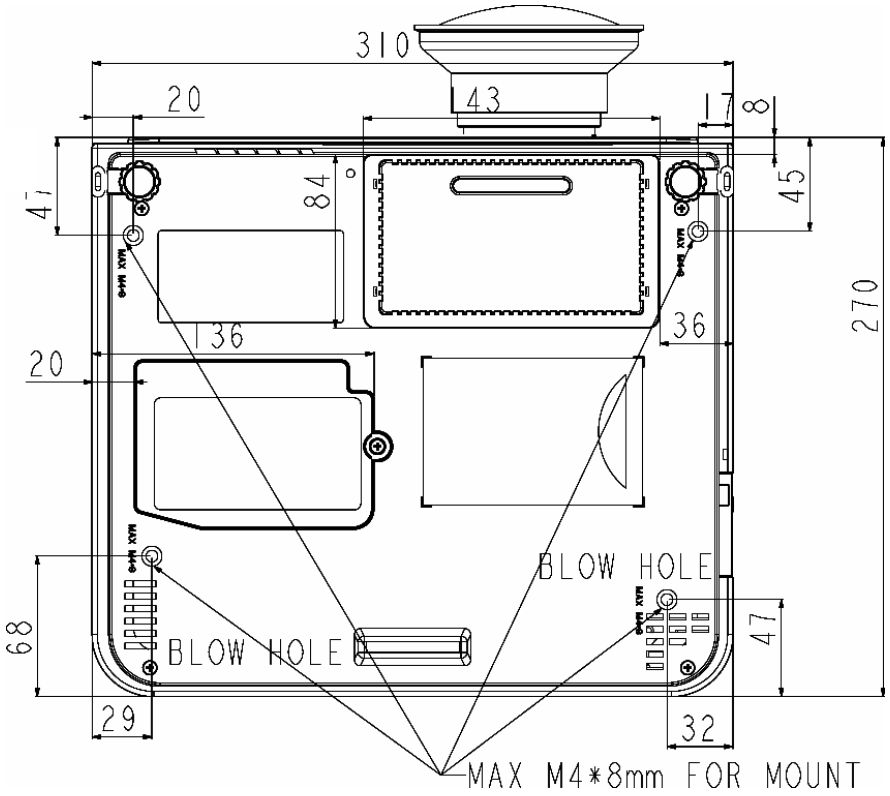

Maintenance and Troubleshooting

Cleaning the projector

Warning: Always unplug the projector before performing any maintenance.

Clean the projector case by wiping it gently with a soft cloth.

If necessary, the case can be cleaned using a neutral detergent and a soft cloth ensure the case is completely dry before turning the projector back on.

Cleaning the lens

Use a commercially available air blower, or use lens clean in g paper and lens cleaner approved for use on optical coatings.

Do not clean the lens with harsh materials or subject the lens to shock, as it can easily become damaged. Close the lens cover when the projector not in use.

Cleaning the Air Filter

A**.** When the air filter becomes clogged with dust, etc., the projector may overheat and turn itself off to prevent internal damage.

B. Clean the air filter every 100-hours.
**If the filter is difficult to clean or if it is deteriorating, it should be replaced*
1.Remove the filter cover from the bottom of projector.
2.Pull out the air filter.
3.Install the new air filter.

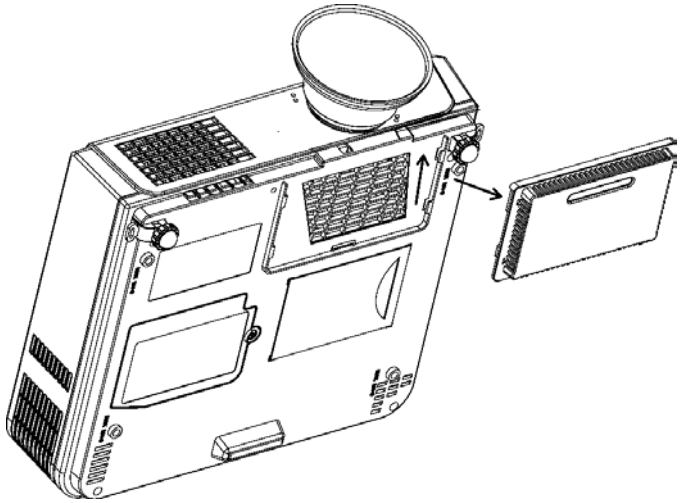

Lamp Replacement

***Caution**: The lamp and inside of the projector become very hot while the projection lamp is lit. Allow the projector to cool for at least 15 minutes prior to opening the lamp door.*

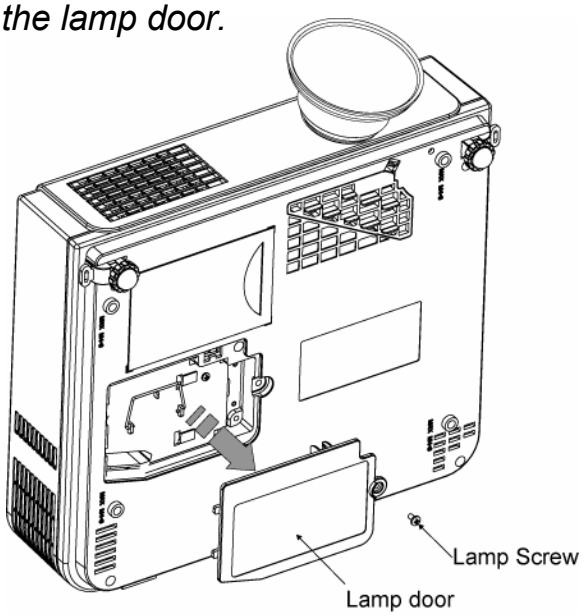

1. Release the Lamp Door Latch using a small screwdriver or similar tool to slide the latch towards the projector lens.
2. Remove the Lamp Door.
3. Remove the two Phillips head screws that hold the lamp in place.
4. Grasp the handle on the top of the lamp and pull the lamp straight up out of the projector.

***Warning:** Do not touch the bulb. Touching the bulb will greatly decrease the life of the lamp and could cause the bulb to explode.*

5. Slide the replacement lamp into place and press firmly to seat the lamp.
6. Reinstall the screws removed in step 3.
7. Reinstall the lamp door and press on the side closest to the lens until the latch snaps into place and the lamp door is flush with the top of the projector.

Indicators

The Power and Lamp indicators show the status of the projector. Before requesting repair, check the projector status using the chart below. If the problem cannot be resolved contact your dealer.

Power (Green)	Lamp (Red)	Condition	Notes
Slow flashing	Off ●	Stand by mode	*Projector is ready to be turned on (normal)
On ●	Off ●	On mode	*Projector is on and operating normally
On ●	Slow flashing	Cool-down mode	*Projector is in cool-down mode and will not respond to user input (normal)
On ●	Fast flashing	Fan-fault mode	* The projector has detected a problem with an internal fan, the lamp will shut off automatically, contact your dealer
Fast flashing	On ●	Lamp-cover open	*The lamp cover is open or there is a problem with the lamp. If the lamp door is closed and replacing the lamp does not correct the issue, contact your dealer.
Fast flashing	Fast flashing	High temperature	*The projector has overheated and shut the lamp off. Correct the over temp condition immediately. 1. Check that the ventilation slots are free from obstructions 2. Check the cleanliness of the air filter. 3. If the condition persists, contact your dealer

Symptom	Possible cause	Remedy
The power is not turned on	*The main power switch is not turned on. *The power cord is disconnected.	*Turn on the main power switch. *Plug the power cord into an AC power outlet
No video	*The input is not correctly connected. *No signal input *No open lens cover	*Select the appropriate input source *Connect correctly *Remove the lens cover
No audio	*The projector is not correctly connected. *The volume is set to minimum. *Mute is turned on	*Check audio cable connect correctly. *Adjust the volume. *Press the MUTE button
No remote function	*No battery *Remote signal be obstructed	*Check battery of remote controller *Remove obstacle between projector and remote controller
Colors are pale	*Color density and color matching are not correctly adjusted. *Color lose	*Adjust the RGB setting. *Check VGA cable.
Abnormal brightness & contrast	*Brightness and contrast are not correctly adjusted. *The lamp is nearing the end of its service life	*Adjust the brightness and contrast setting. *Replace with a new lamp
Video is blurred	*Focus or RGB phase is out of adjustment.	*Adjust the focus and phase.

List of Supported Monitor Displays		
Computer mode		
Signal	Refresh Rate(Hz)	Resolution(dots)
VGA	60	640X480
VESA	60/72/75/85	640X480
SVGA	56/60/72/75/85	800X600
XGA	60/70/75/85	1024X768
SXGA	70/75	1152X864
SXGA	60/75	1280X960
SXGA	60	1280X1024
Component(YPbPr)		
Signal	Refresh Rate(Hz)	Resolution(dots)
SDTV(480i)	30	720X480
SDTV(480p)	60	720X480
HDTV(720p)	60	1280X720
HDTV(1080i)	30	1920x1080
Composite/S-video		
Signal	Refresh Rate(Hz)	Resolution(dots)
TV(NTSC)	60	720X480
TV(PAL,SECAM)	50	720X576