BG1002 (ø100 x 25L)

NMB-MAT

EMINEBEA.COM

DC Blowers

General Specifications

Allowable Ambient Temperature Range:

-10°C ~ +60°C (Operating)
-40°C ~ +60°C (Storage)
(non-condensing environment)

Outline

Units: inch / (mm)

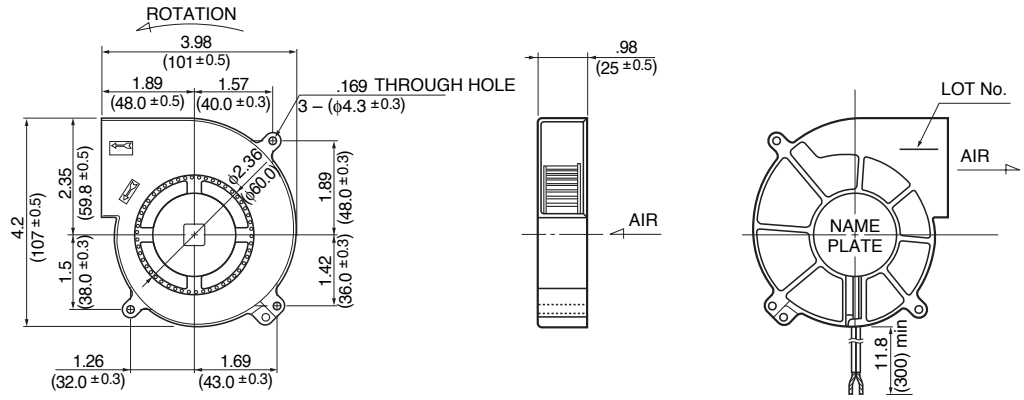

Characteristic Curves

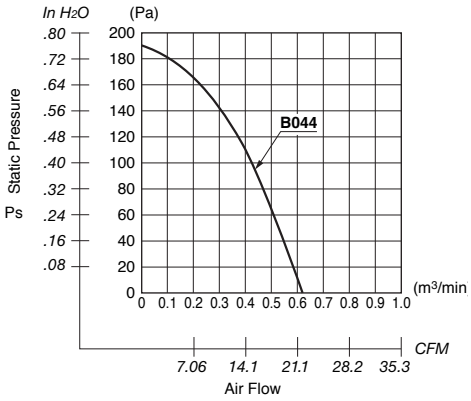

Material

Casing : Plastic (Black) 94V-0
Impeller : Plastic (Black) 94V-0
Bearing : Ball Bearing
Lead Wire : UL1007, AWG26, +Red, -Black

Specifications

MODEL	Rated Product No.	Operating Voltage (V)	Current Voltage (V)	Input (A)*1	Speed Power (W)*1	Max. (min-1)*1	Max. Static Air Flow CFM*1	Max. Static Air Flow (m3/min)*1	Noise Pressure in H2O	Noise Pressure (Pa)*1	Mass (dB)*1	Mass (g)
BG1002-**B044**-000-	00	12	6 ~ 13.8	0.56	6.7	3300	21.5	0.61	.76	190	47.0	170

Rotation: Counterclockwise

*1: Average Values in Free Air