$1.00

OWNER'S GUIDE

ASSEMBLY • OPERATION • MAINTENANCE • PARTS

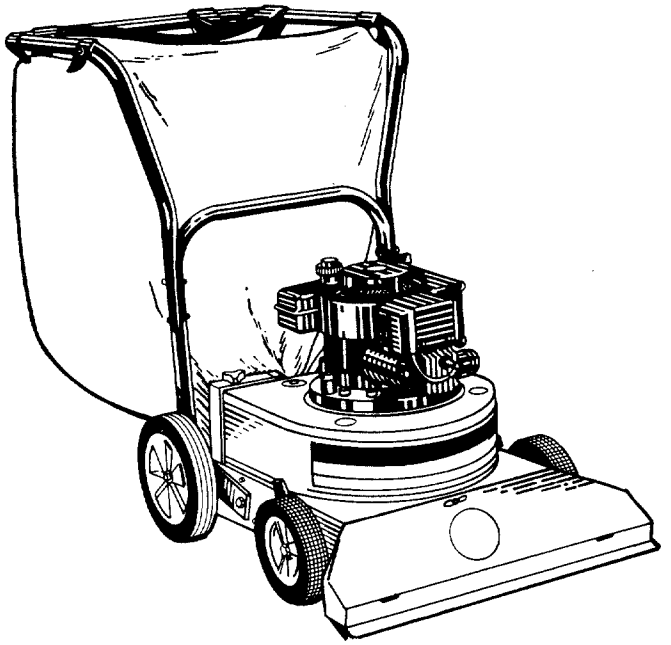

Model Numbers

249-660-000
24665-9

POWER VACUUM

Important: Read Safety Rules and Instructions Carefully

PRINTED IN U.S.A.

FORM NO. 770-5207D

INDEX

Safe Operation Practices 3
Assembly Instructions 4
Operation 7
Adjustments 8
Maintenance 8
Illustrated Parts 10
Replacement Parts List 11

Instructions given with this symbol are for personal safety. Be sure you follow them.

WARNING

This unit is equipped with an internal combustion engine and should not be used on or near any unimproved forest-covered, brush-covered or grass-covered land unless the engine's exhaust system is equipped with a spark arrester meeting applicable local or state laws (if any). If a spark arrester is used, it should be maintained in effective working order by the operator.

In the State of California the above is required by law (Section 4442 of the California Public Resources Code). Other states may have similar laws. Federal laws apply on federal lands. A spark arrester for the muffler is available through your nearest engine authorized service center.

IMPORTANT

is suggested that this manual be read in its entirety before attempting to assemble or operate. Keep this manual in a safe place for future reference and for ordering replacement parts.

This unit is shipped WITHOUT GASOLINE or OIL. After assembly, see separate engine manual for proper fuel and engine oil recommendations.

SAFE OPERATION PRACTICES FOR POWER VACUUMS

1. Read this operating and service instructing manual carefully. Be thoroughly familiar with the controls and proper use of the power vacuum.

2. Never allow children to operate this power vacuum.

3. Keep the area of operation clear of all persons, particularly small children and pets.

4. No one should operate this unit while intoxicated or while taking medication that impairs the senses or reactions.

5. Check fuel before starting engine. Do not fill fuel tank indoors, when engine is running, or while engine is hot. Wipe off any spilled fuel before starting engine.

6. Do not change engine governor settings.

7. Do not put hands near rotating parts for any reason.

8. If the power vacuum should start to vibrate abnormally, stop the engine and check immediately for the cause. Vibration is generally a warning of trouble.

9. Before cleaning, repairing or inspecting, make certain all moving parts have come to a complete stop. Disconnect spark plug wire and keep wire away from plug to prevent accidental starting. Also keep throttle control lever in the stop position.

10. If the power vacuum should become blocked with debris at any point, shut engine off and wait until the impeller comes to a complete stop before attempting to remove the obstruction. Disconnect spark plug wire to prevent accidental starting.

11. Check all bolts for tightness at frequent periods.

12. Never store this power vacuum with fuel in the tank. Allow engine to cool before storing in any enclosure.

13. Never operate this power vacuum unless air duct and vacuum bag are properly affixed in their place. Large zippered end of bag must be closed when operating to prevent objects from being blown out.

13. Keep bag and equipment free of debris when not in use.

15. Never empty vacuum bag when engine is running.

16. Never change auxiliary hose attachment when engine is running.

17. The manufacturer recommends that the operator wear safety glasses or some other suitable eye protection when operating this machine.

18. Check the vacuum bag frequently for wear and replace when necessary.

ASSEMBLY INSTRUCTIONS

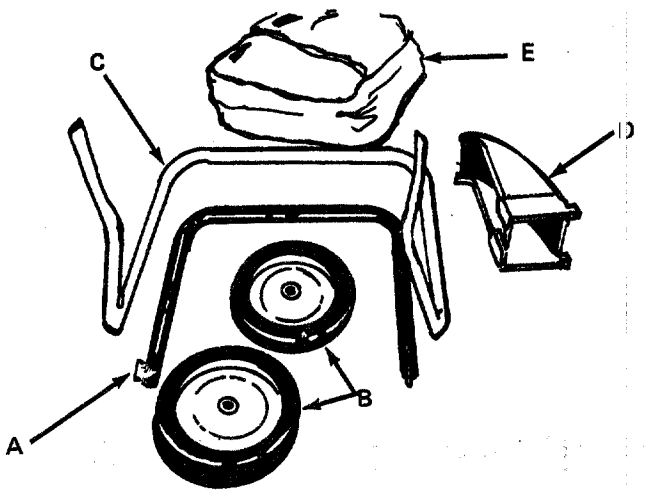

FIGURE 1

TOOLS REQUIRED:

(2) 9/16" Wrenches
(2) 7/16" Wrenches
(1) Hammer or Rubber Mallet

LOOSE PARTS IN CARTON (See figure 1):

A	(1)	Lower Handle
B	(2)	Rear Wheels
C	(1)	Upper Handle
D	(1)	Air Duct Assembly
E	(1)	Bag

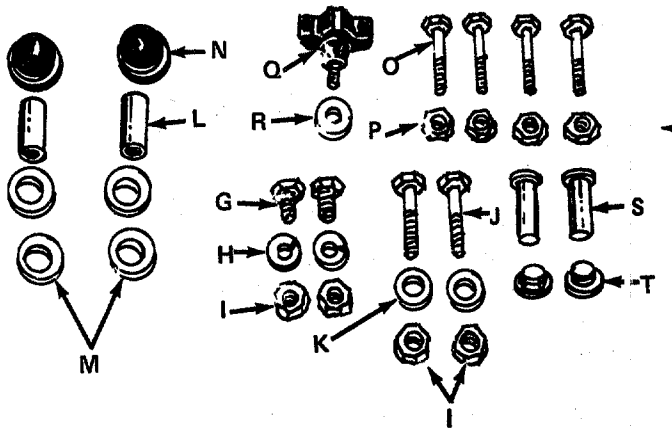

FIGURE 2

CONTENTS OF HARDWARE PACK (See figure 2):

G	(2)	Hex Bolts 3/8-16 x 3/4" Long
H	(2)	Lock Washers 3/8" I.D.
I	(4)	Hex Nuts 3/8-16 Thread
J	(2)	Hex Bolts 3/8-16 x 1-1/2" Long
K	(2)	Belleville Washers 3/8" I.D. x 1-1/8" O.D.
L	(2)	Spacers 1/2" I.D. x 15/16" Long
M	(4)	Flat Washers 1/2" I.D. x 1" O.D.
N	(2)	Black Push Caps
O	(4)	Hex Bolts 1/4-20 x 1-3/4" Long
P	(4)	Hex Lock Nuts 1/4-20 Thread
Q	(1)	Thumb Screw 5/16-18 Thread
R	(1)	Belleville Washer 5/16" I.D. x 7/8" O.D.
S	(2)	Stud Pins
T	(2)	Push-On Speed Nuts

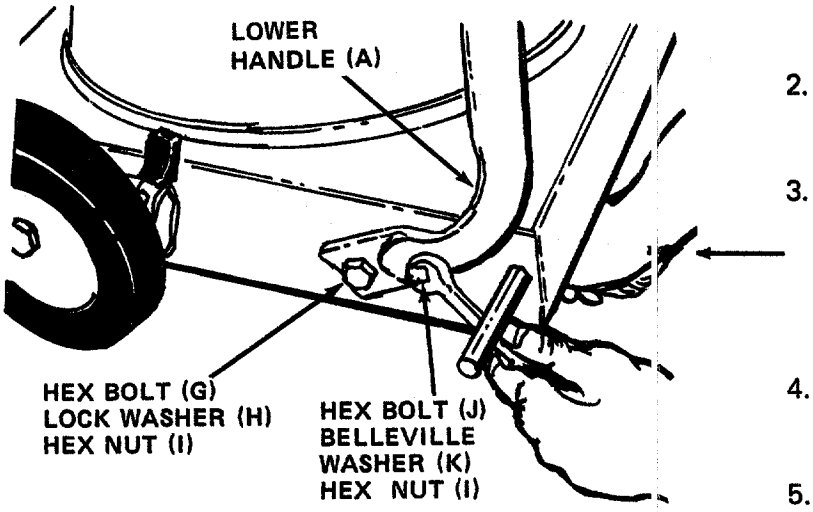

FIGURE 3

1. Remove the vacuum, loose parts, hardware pack and literature from the carton. Make certain all parts and literature have been removed before the carton is discarded.
2. Raise the back of the unit off the floor approximately 3 inches and block it so that the lower handle and rear wheels may be assembled.
3. Place lower handle (A) in position on the vacuum, lining up the holes in the handle with the holes on the frame. See figure 3. Place hex bolts (G) (3/4" long) through lower hole in handle and frame. Secure with lock washers (H) and hex nuts (I) on the inside of frame, finger tight only.
4. Place hex bolts (J) through upper hole in handle and frame. Secure with belleville washers (K) (cupped side against the frame) and hex nuts (I).
5. Tighten all four nuts and bolts using two 9/16" wrenches.

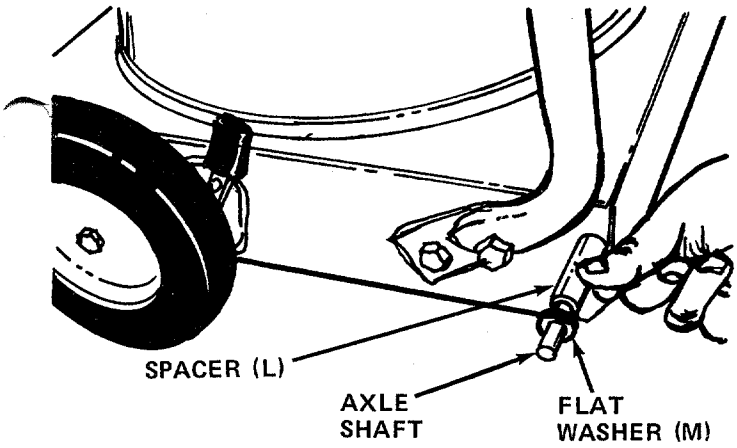

FIGURE 4

6. Slide spacers (L) onto the axle shafts. Place one flat washer (M) on each shaft next to the spacers. See figure 4.

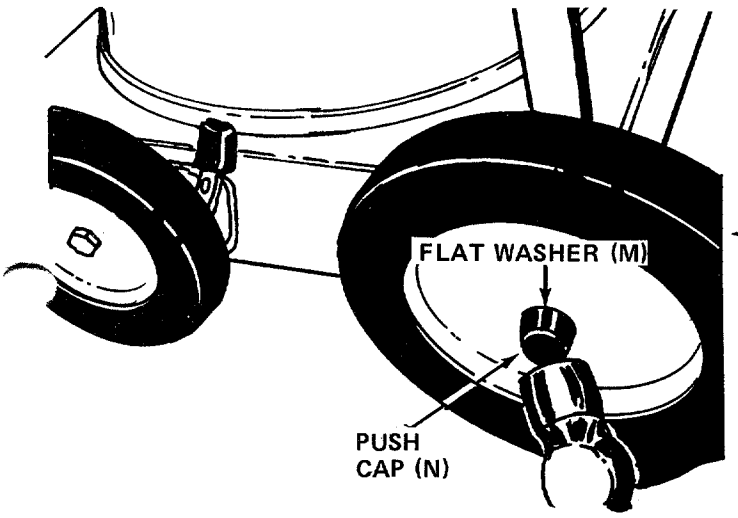

FIGURE 5

7. Place rear wheels in position on the shafts, then another flat washer (M). Secure with black push cap (N) by placing the push cap in position and tapping on with hammer or rubber mallet. See figure 5.

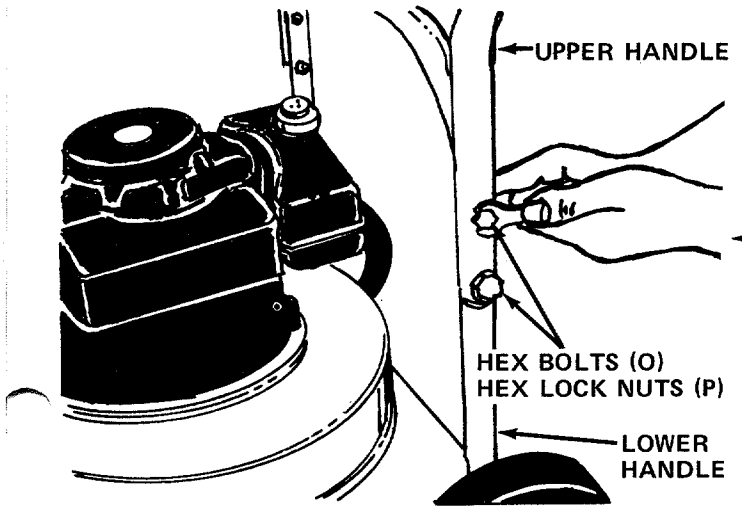

FIGURE 6

8. Place the upper handle (C) in position over lower handle. Fasten with four hex bolts (O) and hex lock nuts (P) provided. See figure 6. Two 7/16" wrenches are required.

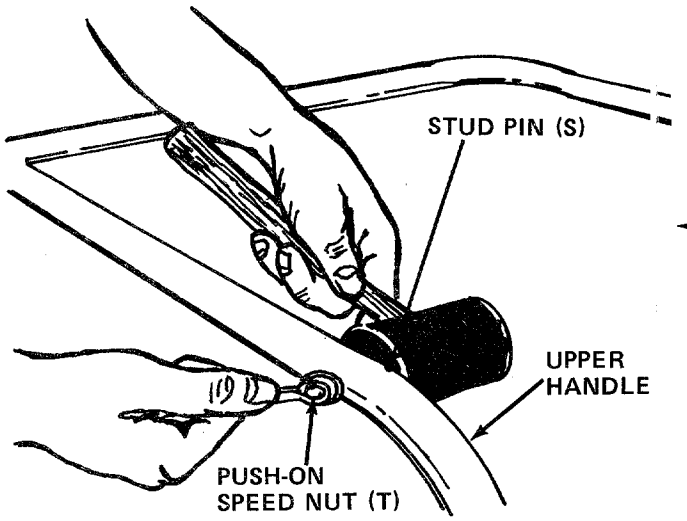

FIGURE 7

9. Place the stud pins (S) in holes in upper handle (head of pins go to the inside of handle). Secure pins with push-on speed nuts (T) by holding speed nut with box wrench and tapping pin with hammer. See figure 7.

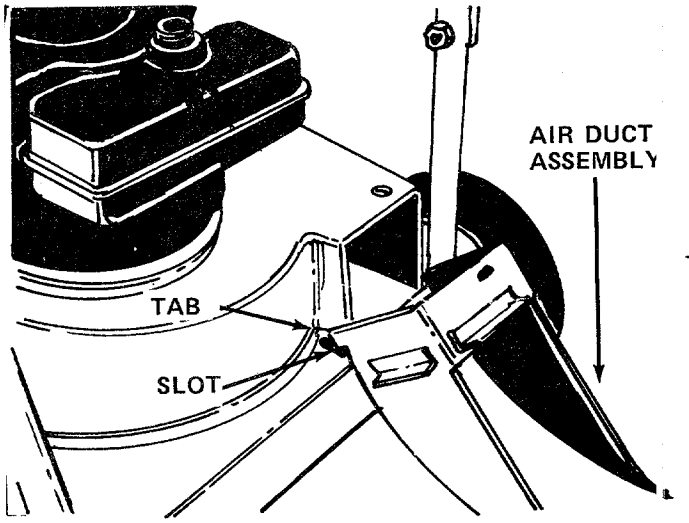

FIGURE 8

10. Place the tabs on the air duct assembly (D) into the slots in the frame as shown in figure 8. Raise the air duct into position.

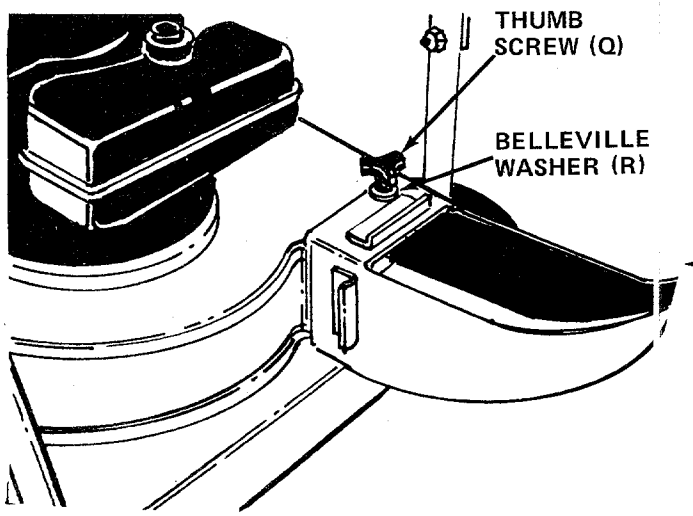

FIGURE 9

11. Secure air duct with thumb screw (Q) and belleville washers (R). Cupped side of washer must be against the air duct. See figure 9.

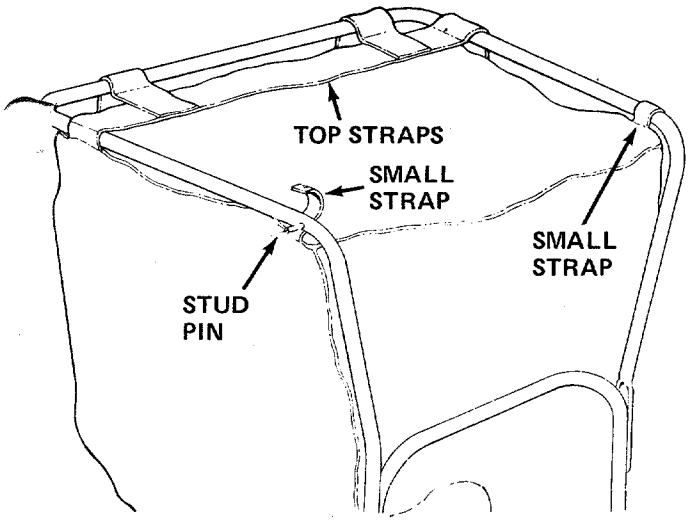

FIGURE 10

12. Assemble the bag (E) by slipping the top straps on the bag over upper handle. Hook the two small straps over the stud pins on handle. See figure 10.

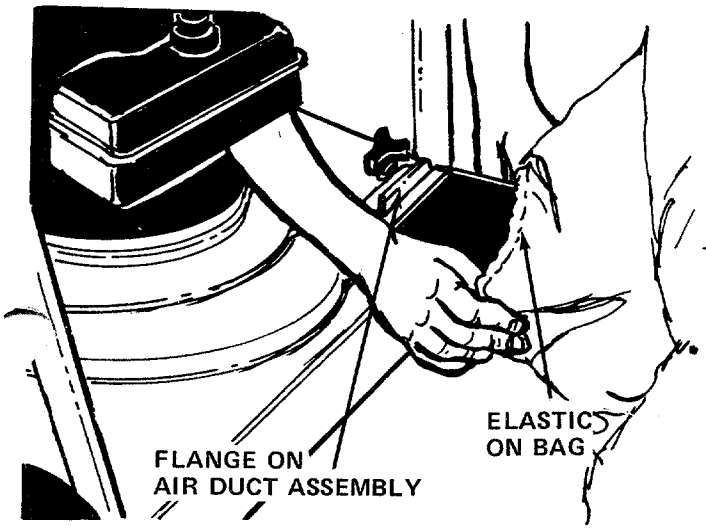

FIGURE 11

13. Slip the elastic opening of the bag over the air duct assembly, making certain the elastic opening is secured behind the flanges on all four sides of the air duct. See figure 11.

OPERATION

BEFORE STARTING

Service engine with gas and oil. See engine manual packed with vacuum for complete instructions for care and maintenance of engine. READ DIRECTIONS CAREFULLY.

CAUTION

Revolving Blades - Keep hands and feet away from all openings.

TO START ENGINE

After the engine has been properly fueled and oiled (refer to engine operating and maintenance instructions), start engine as follows.

1. Move throttle control lever on engine to START position.
2. Crank engine. Pull recoil with quick firm pull. Do not pull out so far the rope stops with a jerk as this will cause rope failure. Do not allow rope and handle to snap back into place.
3. After two or three full firm pulls on recoil (or as soon as engine fires), move speed control to RUN position.

TO STOP ENGINE

1. To stop engine, move throttle control lever to STOP position.
2. Disconnect spark plug wire and ground to prevent accidental starting while equipment is unattended.

Operate a new engine at intermediate speeds and light load for the first few hours as you would a new automotive engine.

The bag may be emptied using the large zipper as shown in figure 12. **Be certain the zipper is closed when operating the unit.**

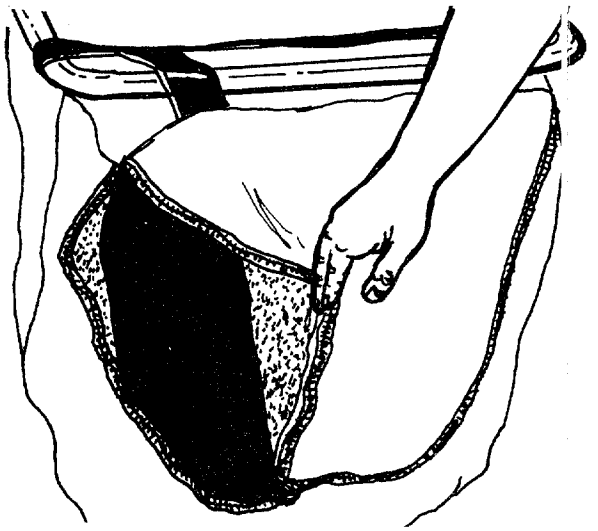

FIGURE 12.

ADJUSTMENTS

CAUTION

Do not at any time make any adjustment to the unit without first stopping engine and disconnecting spark plug wire.

HEIGHT ADJUSTMENT

An adjusting plate and thumb lever at both front wheels provide height adjustment for the vacuum. See figure 13. Each adjusting plate has nine positions. Height will be changed when the thumb lever is moved from one position to another. Simply depress thumb lever towards wheel and move wheel and lever assembly to desired position. Both wheels must be placed in the same relative position. Lower the front of the unit to obtain more suction.

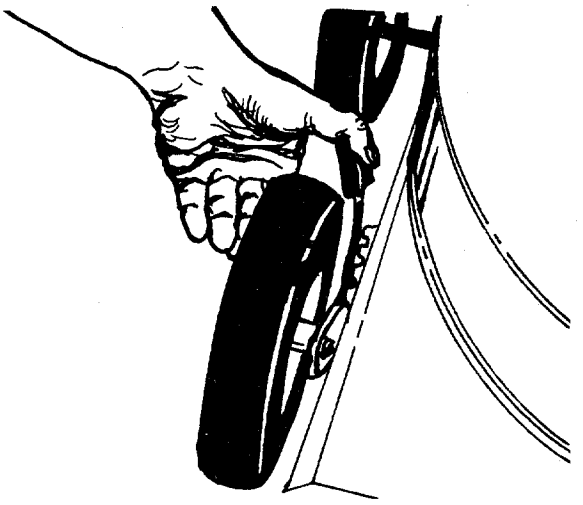

FIGURE 13

CARBURETOR ADJUSTMENT

WARNING

If any adjustments are made to the engine while the engine is running (e.g. carburetor), disengage all clutches. Keep clear of all moving parts. Be careful of heated surfaces and muffler.

If carburetor needs adjustment to start or for operation, see "Carburetor Adjustment" section of engine manual.

MAINTENANCE

WARNING

Disconnect spark plug wire and ground it against the engine before performing any repairs or maintenance.

BAG

Under normal usage the bag is subject to wear, and should be checked periodically. Be sure any replacement complies with the manufacturer's recommendation. Wash bag periodically with water. Allow to dry thoroughly in the shade. Do not use heat.

ENGINE

Refer to engine manual for proper maintenance procedures. Follow instructions carefully.

OFF-SEASON STORAGE

The following steps should be taken to prepare the vacuum for storage.

1. Clean the engine and the entire unit thoroughly.
2. Refer to engine manual for correct engine storage instructions.
3. Store in a clean, dry area.

NOTE

When storing any type of power equipment in an unventilated or metal storage shed, care should be taken to rust proof the equipment. Using a light oil or silicone, coat the equipment especially all moving parts.

TROUBLE SHOOTING CHART

PROBLEM	CAUSE	REMEDY
1. Engine fails to to start.	A. Check fuel tank for gas. B. Spark plug lead wire disconnected. C. Faulty spark plug.	A. Fill tank if empty. B. Connect lead wire. C. Clean, adjust gap or replace.
2. Hard starting or loss of power.	A. Spark plug wire loose. B. Dirty air cleaner.	A. Connect and tighten spark plug wire. B. Clean air cleaner as described in engine manual.
3. Engine overheats.	A. Carburetor not adjusted properly. B. Air flow restricted. C. Engine oil level low.	A. Adjust carburetor. See engine manual. B. Remove blower housing on engine and clean as described in the engine manual. C. Fill crankcase with the proper oil.
4. Excessive vibration.	A. Bent crankshaft. B. Impeller assembly out of balance.	A. Replace crankshaft (should be done by an authorized service dealer). B. Replace impeller assembly.

NOTE: For repairs beyond the minor adjustments listed above, please contact your local authorized service dealer.

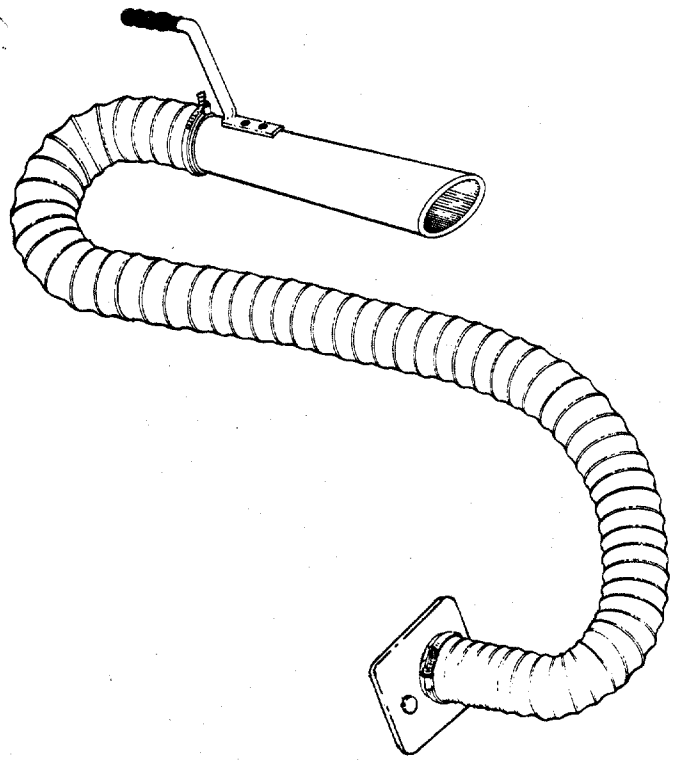

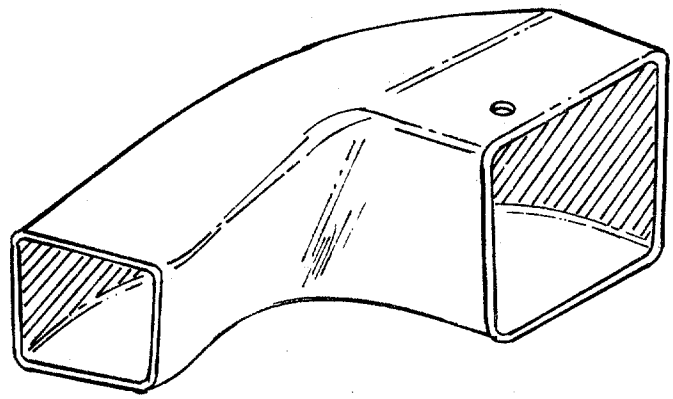

Hose Attachment Kit Model 290-210-000 and Blower Conversion Kit Model 290-211-000 are available as optional equipment.

Model 660 and 24665

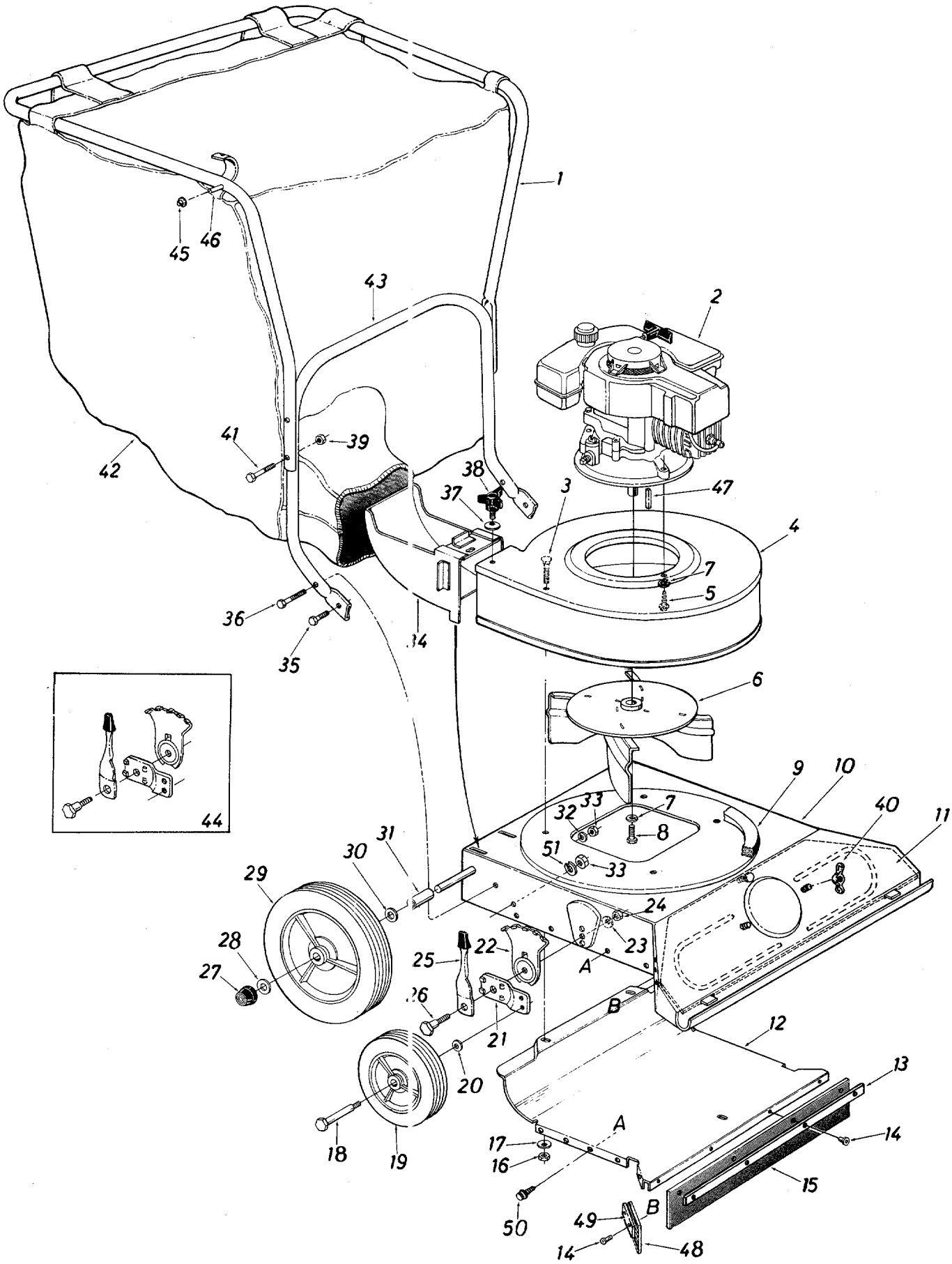

Model 660 and 24665

PARTS LIST FOR MODEL 660 POWER VACUUM

Ref. No.	Part No.	Color Code	Description	New Part	Ref. No.	Part No.	Color Code	Description	New Part
1	749-0664		Upper Handle (Painted)		28	736-0272		Fl.-Wash. 1/2" I.D. x 1.0" O.D. x .06	
	749-0480		Upper Handle (Chrome)						
2	- - - - - - -		Engine		29	734-1140		Wheel Ass'y. Comp. 10 x 1.75" - Rear	
3	710-0260		Carriage Bolt 5/16-18 x .62" Lg.*						
4	15784	--- 638	Blower Housing Ass'y.		30	736-0272		Fl.-Wash. 1/2" I.D. x 1.0" O.D. x .06	
5	710-0654A		Hex Tap Scr. 3/8-16 x 1.00" Lg.	N					
6	15786A		Impeller Ass'y.	N	31	750-0588		Wheel Spacer 1/2" I.D. x 15/16" Lg.	
7	736-0217		L.-Wash. 3/8" I.D.*						
8	710-0591		Hex Bolt 3/8-24 x 1.0" Lg. w/Patch		32	736-0331		Bell.-Wash. .39" I.D. x 1.12" O.D.	
9	722-0137		P.V.C. Foam Strip (4-Pcs. 12" Lg.)		33	712-0798		Hex Nut 3/8-16 Thd.*	
					34	15779		Air Duct Ass'y.	
10	15780	--- 638	Vacuum Deck Ass'y.		35	710-0201		Hex Bolt 3/8-16 x .75" Lg.*	
11	15796		Front Baffle Ass'y.		36	710-0344		Hex Bolt 3/8-16 x 1.50" Lg.*	
12	15788		Lower Baffle Ass'y.		37	736-0242		Bell.-Wash. .34" I.D. x .87" O.D.	
13	15790		Wiper Retaining Strip		38	720-0170		Thumb Scr. 5/16-18 x .75" Lg.	
14	728-0123		Pop Rivet .188" Dia.		39	712-0107		Hex Cent. L.-Nut 1/4-20 Thd.	
15	735-0222		Nozzle Wiper Rear		40	712-0113		Wing Nut 1/4-20 (Plastic)	
16	712-0267		Hex Nut 5/16-18 Thd.*		41	710-0136		Hex Bolt 1/4-20 x 1.75" Lg.*	
17	736-0242		Bell.-Wash. .34" I.D. x .87" O.D.		42	764-0208A		Vacuum Bag (6.6 Bushel)	N
18	738-0102		Shld. Bolt 1/2" Dia. x 1.45" Lg. (3/8-16)		43	749-0592		Lower Handle (Painted)	
						749-0665		Lower Handle (Chrome)	
19	734-1139		Wheel Ass'y. Comp. 8 x 1.75" - Front		44	14578		Height Adjuster Ass'y. Comp. - R.H.	
20	736-0331		Bell.-Wash. .39" I.D. x 1.12" O.D.			14579		Height Adjuster Ass'y. Comp - L.H. (Not Shown)	
21	15262		Wheel Pivot Bar		45	1539-019		Push Speed Nut .25" Dia.	
22	15261		Index Plate		46	711-0737		Stud Pin .250" Dia. x 1.75" Lg.	
23	736-0331		Bell.-Wash. .39" I.D. x 1.12" O.D.		47	714-0105		Sq. Key 3/16 x 3/16 x 1.00" Lg.	
					48	735-0221		Nozzle Wiper Side	
24	712-0798		Hex Nut 3/8-16 Thd.*		49	15789		Wiper Retaining Strip	
25	14832		Spring Lever Ass'y. w/Knob		50	710-0302		Hex Wash. Hd. "F" Tap Scr. #10	
26	738-0507B		Shoulder Bolt .500" x 7/16" Lg. (3/8-16)	N					
					51	736-0169		L-Wash. 3/8" I.D.*	
27	726-0128		Push Cap .50" Rod (Black)						

* For faster service obtain standard nuts, bolts and washers locally. If these items cannot be obtained locally, order by part number and size as shown on parts list.

638 - MTD Red
621 - Brilliant Fire Mist (24665)

When ordering parts if color or finish is important, use color code sown above [i.e. (part no.) --- 638 for Red Finish].

NOTE

This instruction manual covers various models and all specifications shown do not necessarily apply to your model. Specifications subject to change without notice or obligation.
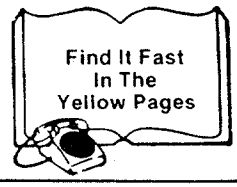
NOTE: The engine is not under warranty by the vacuum manufacturer . . . If repairs or service is needed on the engine, please contact your nearest authorized engine service outlet. Check the "Yellow Pages" of your telephone book under "Engines - Gasoline."