BROAN®

NuTone®

MODEL C500
MODEL C501CY
MODEL C501K

READ AND SAVE THESE INSTRUCTIONS

INSTALLATION

ALL ELECTRICAL WORK MUST BE DONE IN ACCORDANCE WITH LOCAL AND/ OR NATIONAL ELECTRICAL CODE AS APPLICABLE.

TURN OFF POWER AT SERVICE ENTRANCE BEFORE INSTALLING, WIRING, OR SERVICING THIS PRODUCT.

1. Hold chime mechanism against wall and mark four (4) mounting holes.
2. Drill 3/16” holes where marked and tap in wall anchors from parts bag.
3. Bring wiring through access hole(s) in chime mechanism backplate.
4. Attach chime mechanism to wall with screws from parts bag. Tighten screws securely.
5. Hang chime tubes from mechanism as shown.

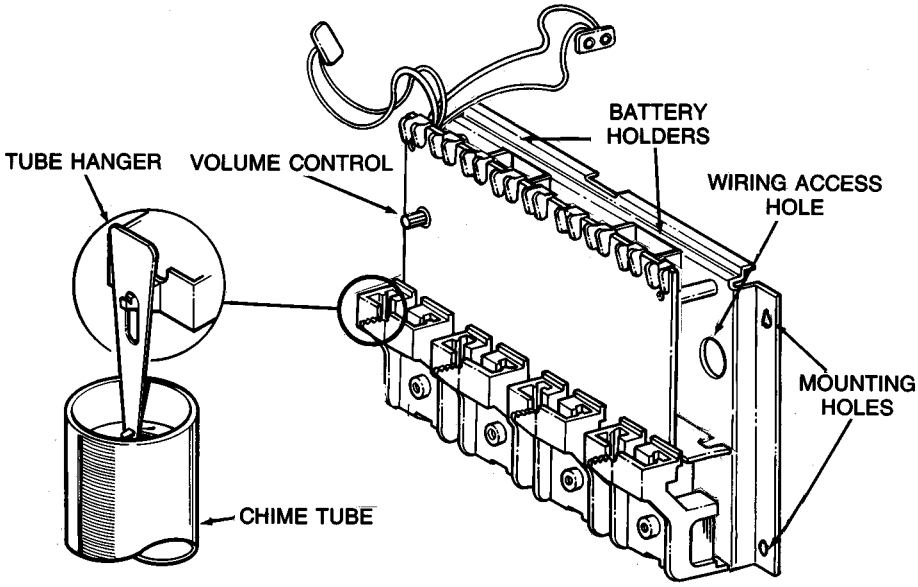

DO NOT OIL CHIME PLUNGERS.
Oil will cause them to stick during operation. If plungers fail to operate freely due to accumulation of dust, cooking grease, etc., clean with a non-flammable cleaning solvent which will evaporate, leaving a dry surface.

INSTALLATION (continued)

6. Connect wires to appropriate terminals.

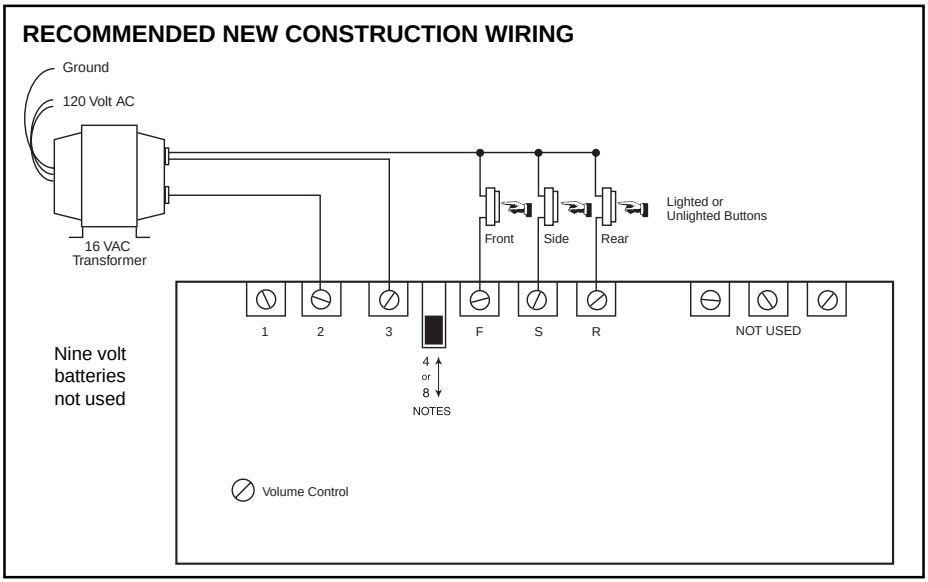

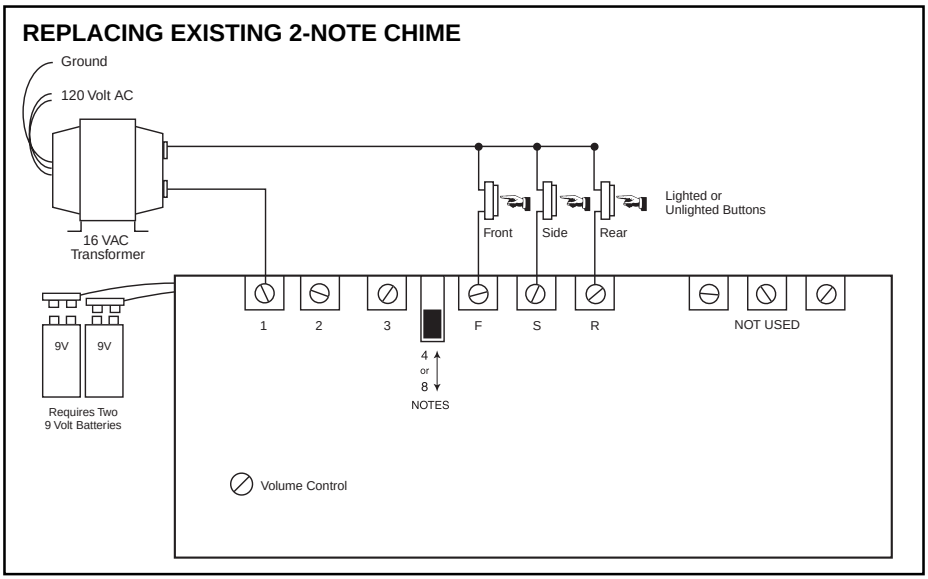

7. Install two (2) alkaline 9-volt batteries, if appropriate for your application. Turn on power at service entrance. Make sure pushbuttons operate chime properly. (Adjust switch on circuit board for 4 or 8 chime tones at front door. Side and rear doors will have 1 chime tone each.)
8. Adjust chime volume with stem on circuit board assembly. If plunger(s) fail to strike tube(s), move tube(s) one notch closer. If plunger(s) strike a double tone, move tube(s) one notch out.
9. Hook cover over chime mechanism.

SPECIAL MOUNTING INSTRUCTIONS FOR MODEL C500 DOOR CHIME

Model C500 may be surface-mounted or recessed into the wall.

SURFACE-MOUNTED

1. Remove chime mechanism from wood case.
2. Remove and discard shipping panel from top rear of wood case.
3. Mount and wire chime mechanism.
4. Hang wood case from chime mechanism.
5. Install chime tubes.

RECESSED-MOUNTED

1. Cut out a 10-1/2” wide by 59-1/8” high hole in wall centered between two wall studs.
2. Make two mounting frames from 2 x 4’s (Figure 1).
3. Nail mounting frames to wall studs flush with top and bottom of cut-out (Figure 2).
4. Wire chime mechanism.
5. Secure the chime to mounting frames using black screws and finishing washers (Figure 2).
6. Install chime tubes.

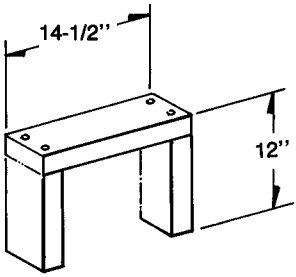

Figure 1

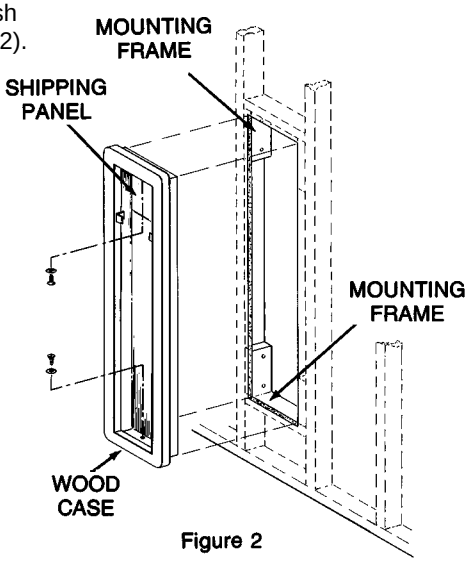

Figure 2

WARRANTY

ONE YEAR LIMITED WARRANTY

We warrant to the original consumer purchaser of our products that such products will be free from defects in materials or workmanship for a period of one year from date of original purchase. THERE ARE NO OTHER WARRANTIES, EXPRESSED OR IMPLIED, INCLUDING, BUT NOT LIMITED TO, IMPLIED WARRANTIES OR MERCHANTABILITY OR FITNESS FOR A PARTICULAR PURPOSE.

During this one-year period, we will, at our option, repair or replace, without charge, any product or part which is found to be defective under normal use and service.

THIS WARRANTY DOES NOT EXTEND TO FLUORESCENT LAMP STARTERS AND TUBES. This warranty does not cover (a) normal maintenance and service or (b) any products or parts which have been subject to misuse, negligence, accident, improper maintenance or repair (other than by us), faulty installation or installation contrary to recommended installation instructions.

The duration of any implied warranty is limited to the one-year period as specified for the express warranty. Some states do not allow limitation on how long an implied warranty lasts, so the above limitation may not apply to you.

OUR OBLIGATION TO REPAIR OR REPLACE, AT OUR OPTION, SHALL BE THE PURCHASER'S SOLE AND EXCLUSIVE REMEDY UNDER THIS WARRANTY. WE SHALL NOT BE LIABLE FOR INCIDENTAL, CONSEQUENTIAL OR SPECIAL DAMAGES ARISING OUT OF OR IN CONNECTION WITH PRODUCT USE OR PERFORMANCE. Some states do not allow the exclusion or limitation of incidental or consequential damages, so the above limitations or exclusion may not apply to you.

This warranty gives you specific legal rights, and you may also have other rights, which vary from state to state. This warranty supersedes all prior warranties.

To qualify for warranty service, you must (a) notify us at an address stated below, (b) give the model number and part identification and (c) Describe the nature of any defect in the product or part. At the time of requesting warranty service, you must present evidence of the original purchase date.

Broan-NuTone LLC, 926 West State Street, Hartford, WI 53027 (1-800-637-1453)
NuTone, Inc., Madison and Red Bank Roads, Cincinnati, OH 45227 (1-800-543-8687)

SERVICE PARTS

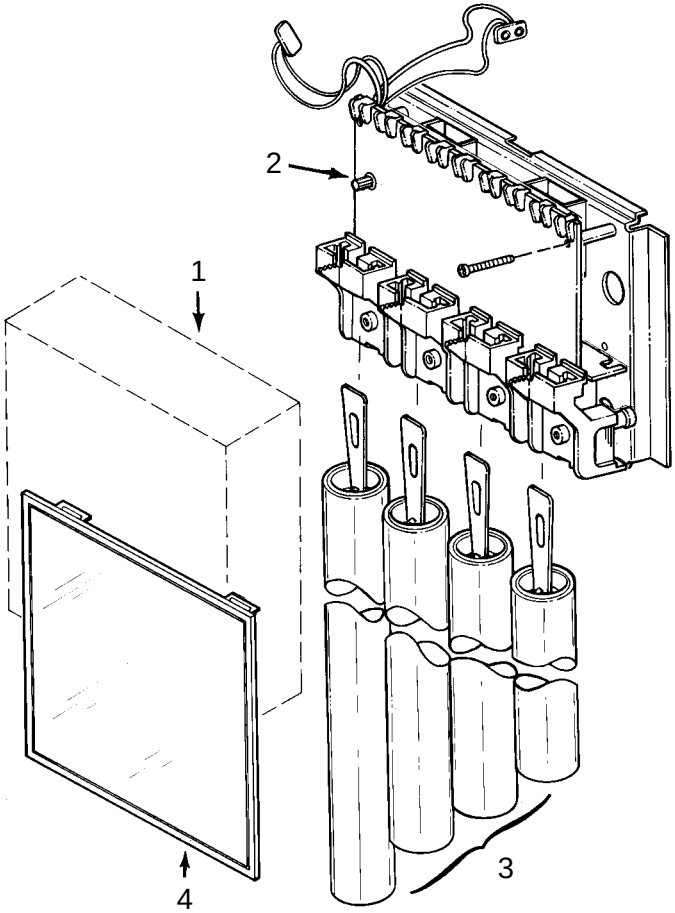

KEY NO.	PART NUMBER	DESCRIPTION
1	99521018	Case, Oak (C500)
	97014976	Cover, Cherry (C501CY)
	99522831	Cover, Oak (C501K)
2	99521400	Solenoid/PC Board Assembly
3	99522069	Matched Set of (4) Chime Tubes (Includes Hangers)
4	99521420	Faceplate (C500)

Broan-NuTone LLC, Hartford, WI 53027
NuTone, Inc., Cincinnati, OH 45227

99042836D