Makita Canada Inc.

makita

14.4V IMPACT DRIVER W/LED LIGHT

Model 6935FDWAE(MCA)

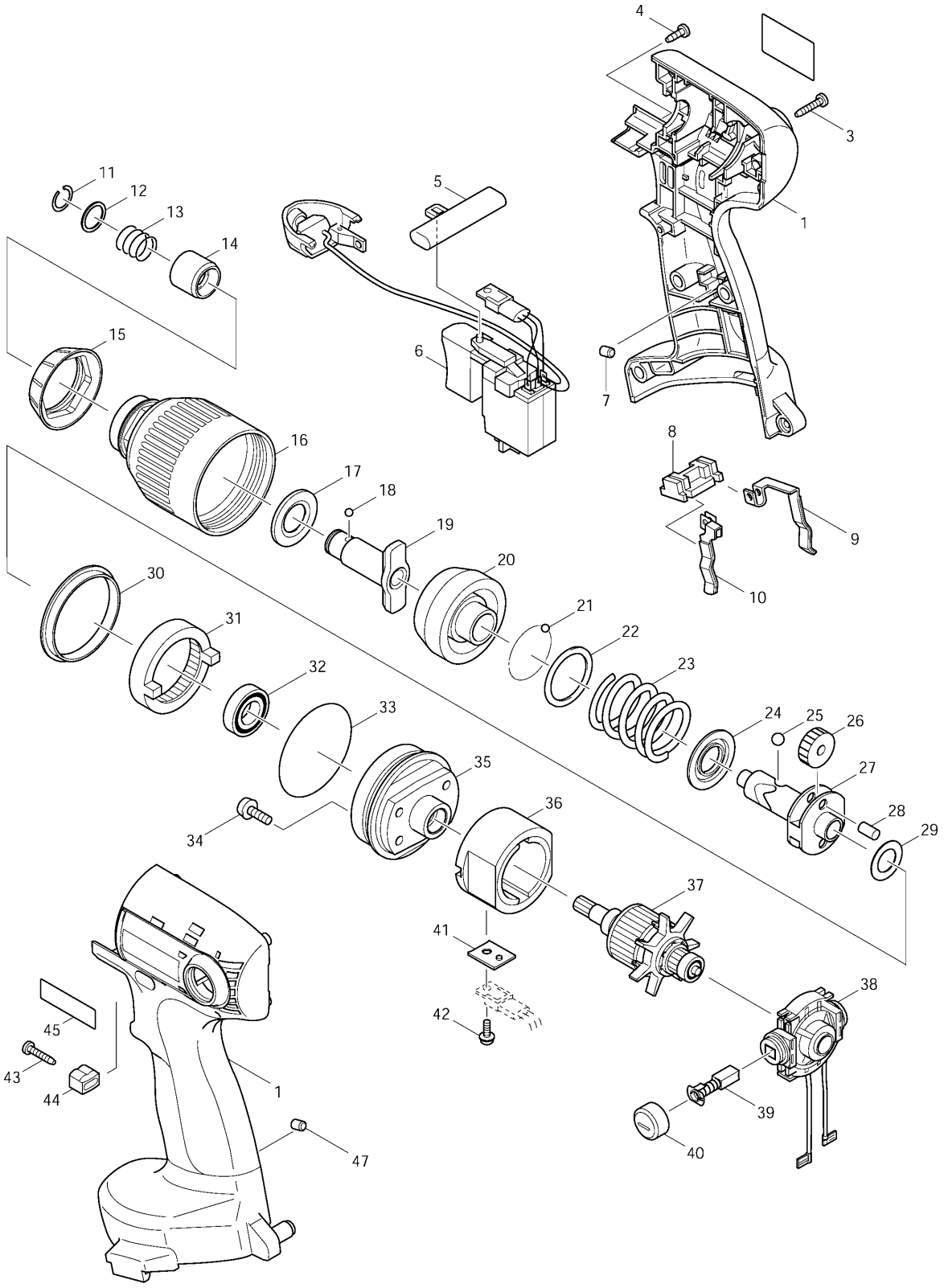

08-2004

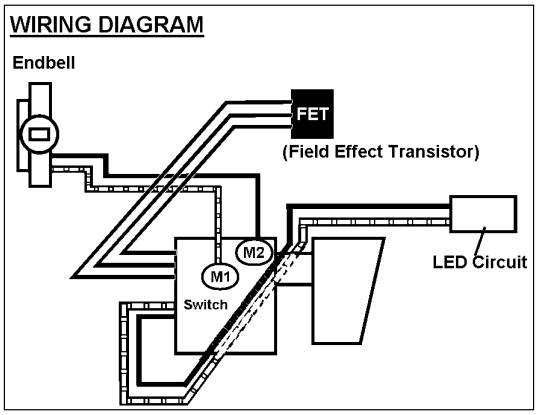

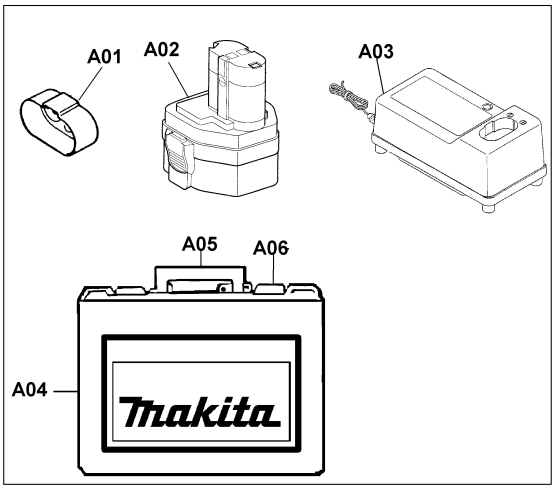

Item No.	Part No.	No. Used	Description
1	183773-1	1	Housing Set (Includes Item 45)
3	266130-9	8	Tapping Screw Bind PT 3X16
4	266007-8	1	Tapping Screw Bind PT 3X10
5	416079-5	1	F/R Change Lever
6	638326-6	1	Switch Unit
7	263024-9	1	Rubber Pin 4
8	687085-9	1	Holder
9	654253-9	1	Spring Terminal (Plus)
10	654254-7	1	Spring Terminal (Minus)
11	231951-8	1	Ring Spring 11
12	267085-1	1	Flat Washer 12
13	233005-7	1	Compression Spring 13
14	324420-7	1	Sleeve
15	421847-3	1	Bumper
16	153808-2	1	Hammer Case Com
17	261108-7	1	Nylon Washer 14
18	216001-0	2	Steel Ball 3.5
19	324432-0	1	Anvil M
20	324359-4	1	Hammer
21	216001-0	24	Steel Ball 3.5
22	267175-0	1	Flat Washer 24
23	233381-9	1	Compression Spring 25
24	267766-7	1	Cup Washer 14
25	216011-7	2	Steel Ball 5.6
26	226336-1	2	Spur Gear 22
27	324220-5	1	Spindle
28	256253-1	2	Pin 5
29	267212-0	1	Flat Washer 12
30	257254-2	1	Ring 41
31	227112-6	1	Internal Gear 51
32	211150-8	1	Ball Bearing 6901ZZ
33	213620-3	1	O Ring 46
34	911516-9	4	P.H. Screw M4x12
35	317597-5	1	Internal Gear Case
36	638155-7	1	Yoke Unit
37	619134-4	1	Armature
38	638156-5	1	Endbell Com
39	193466-2	2	Carbon Brush CB-434 (2pcs/Set)
40	643933-2	2	Brush Holder Cap
41	689096-0	1	FET Spacer
42	266170-7	1	Tapping Screw ST3X8
43	266130-9	1	Tapping Screw Bind PT 3X16
44	313118-1	1	Stopper
45	819720-3	1	Makita Label
47	263024-9	1	Rubber Pin 4
Accessories			
A01	414938-7	1	Battery Cover
A02	192600-1	1	14.4V Ni-Cad Battery 1422 W/Clip (2.0Ah) (For other Batteries, See Catalogue)
A03	DC1414	1	Charger DC1414 for Ni-Cad & Ni-MH 7.2V ~ 14.4V 1.3 ~ 3.0Ah Batteries
A04	183763-4	1	Plastic Carrying Case (Includes 324207-7 - Shaft & Items A05 & A06)
A05	417723-7	1	Handle
A06	417724-5	2	Latch

Service Tools

042017-7A - Makita Grease N No. 2 100g (3.5oz)
1R045 - Gear Extractor, Large