Service
Service
Service

Service Manual

Horizontal Frequency
30-80 kHz

TABLE OF CONTENTS

Description	Page	Description	Page
Table Of Contents	1	6.1 Software Flow Chat	13
Revision List	2	6.2 Electrical Block Diagram	15
1. Monitor Specification	3	7. Schematic	17
2. LCD Monitor Description	4	7.1 Main Board	17
3. Operation Instruction	5	7.2 Power Board	21
3.1 General Instructions	5	8. PCB Layout	24
3.2 Control Button	5	8.1 Main Board	24
3.3 Adjusting the Picture	5	8.2 Power Board	26
4. Input/Output Specification	8	8.3 Key Board	28
4.1 Input Signal Connector	8	9. Maintainability	28
4.2 Factory Preset Display Modes	8	9.1. Equipments and Tools Requirement	29
5 Panel Specification	9	9.2. Trouble Shooting	30
5.1 Display Characteristics	9	10. White-Balance, Luminance adjustment	36
5.2 Optical Characteristics	10	11.Monitor Exploded View	38
5.3 Electrical Characteristics	11	12. BOM List	40
6.Block Diagram	13		

SAFETY NOTICE

ANY PERSON ATTEMPTING TO SERVICE THIS CHASSIS MUST FAMILIARIZE HIMSELF WITH THE CHASSIS AND BE AWARE OF THE NECESSARY SAFETY PRECAUTIONS TO BE USED WHEN SERVICING ELECTRONIC EQUIPMENT CONTAINING HIGH VOLTAGES.

CAUTION: USE A SEPARATE ISOLATION TRANSFOMER FOR THIS UNIT WHEN SERVICING

Revision List

Revision	Date	Revision History	Remark
A00	Dec.-25-2009	Initial release	T99LHDDBWKA1ANE
			T992HDDBWKA2ANE
		Panel list	IVO M190MWW3
			TPV TPM190A1

1. Monitor Specifications

LCD Panel	Model name	919Swa
	Driving system	TFT Color LCD
	Viewable Image Size	48.1cm diagoanl
	Pixel pitch	0.2835mm(H) x 0.2835mm(V)
	Video	R, G, B Analog Interface
	Separate Sync.	H/V TTL
	Display Color	16.7M Colors
	Dot Clock	135 MHz
Resolution	Horizontal scan range	30 kHz - 83 kHz
	Horizontal scan Size(Maximum)	408.24mm
	Vertical scan range	55 Hz - 75 Hz
	Vertical scan Size(Maximum)	255.15mm
	Optimal preset resolution	1440 x 900 (60 Hz)
	Plug & Play	VESA DDC2B/CI
	Input Connector	D-Sub 15pin
	Input Video Signal	Analog: 0.7Vp-p(standard), 75 OHM
	Power Source	100-240V~, 50/60Hz
	Power Consumption	Active < 37 W
		Standby < 2 W
	Speakers	2 x 1W
Physical Characteristics	Connector Type	15-pin Mini D-Sub
	Signal Cable Type	Detachable
	Dimensions & Weight:	
	Height (with base)	365 mm
	Width	439mm
	Depth	190 mm
	Weight (monitor only)	3.7 kg
	Weight (with packaging)	5.2kg
Environmental	Temperature:	
	Operating	0° to 40°
	Non-Operating	-20°to 60°
	Humidity:	
	Operating	10% to 85% (non-condensing)
	Non-Operating	5% to 80% (non-condensing)
	Altitude:	
	Operating	0~ 3000m (0~ 10000 ft)
	Non-Operating	0~ 5000m (0~ 15000 ft)

2. LCD Monitor Description

The LCD MONITOR will contain a main board, a power board, an audio board and a key board which house the flat panel control logic, brightness control logic and DDC.

The power board will provide AC to DC Inverter voltage to drive the backlight of panel and the main board chips each voltage.

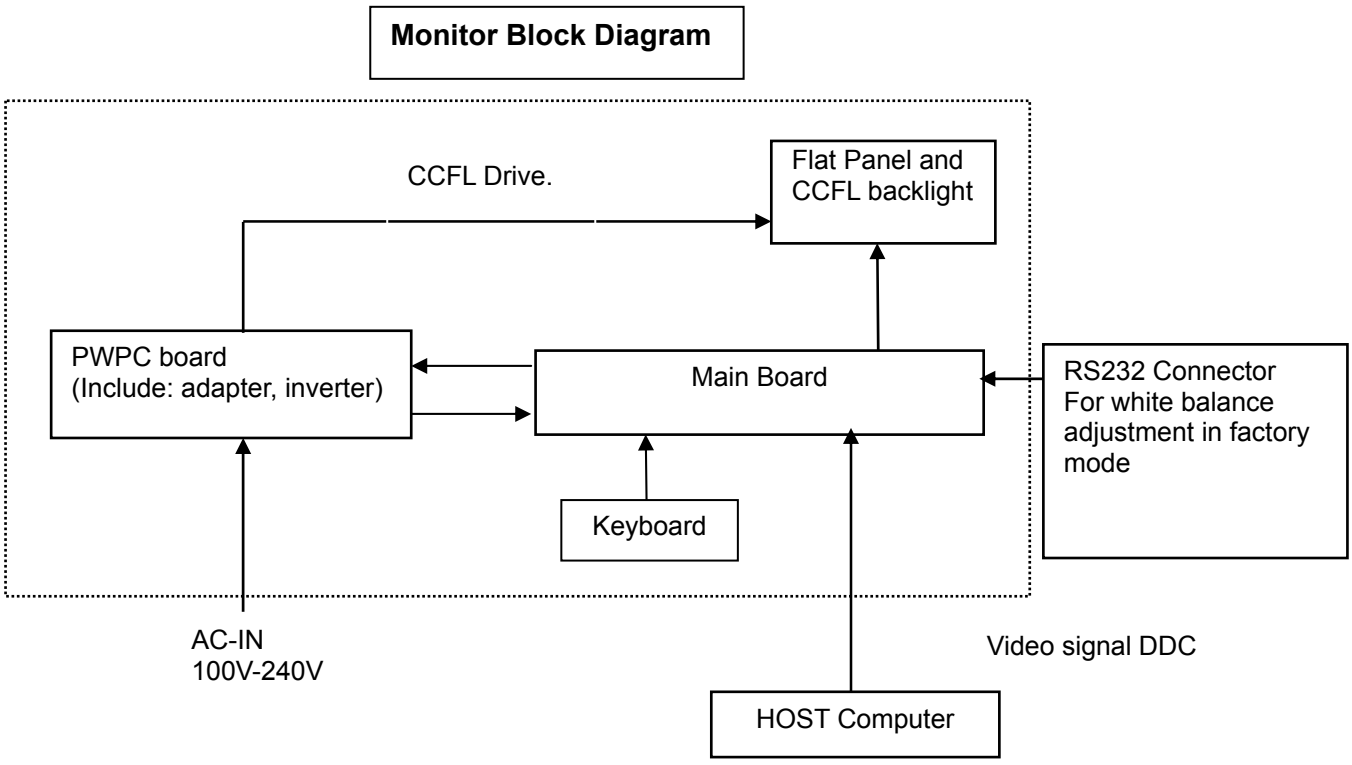

3. Operating Instructions

3.1 General Instructions

Press the power button to turn the monitor on or off. The other control knobs are located at front panel of the monitor (See Figure). By changing these settings, the picture can be adjusted to your personal preferences.
* The power cord should be connected.
* Press the power button to turn on the monitor. The power indicator will light up.

3.2 Control Buttons

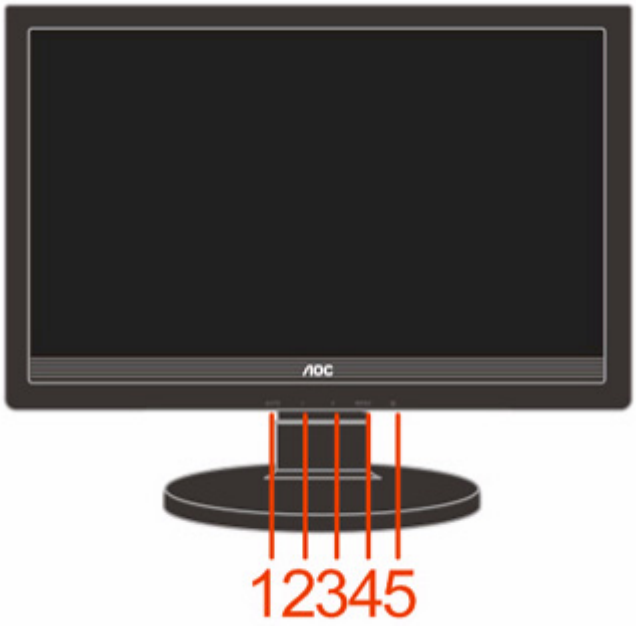

1. Auto / Exit
2. Eco mode / -
3. Volume / +
4. Menu / Enter
5. Power Button & Indicator

3.3 Adjusting the Picture

- Press the MENU-button to activate the OSD window.
- Press+ or - to navigate through the functions. Once the desired function is highlighted, press the MENU-buttonto activate it.If the function selected has a sub-menu, press + or - again to navigate through the sub-menu functions.Once the desired function is highlighted, press MENU-button to activate it.
- Press+ or - to change the settings of the selected function. To exit and save, select the exit function. If you want to adjust any other function, repeat steps 2-3.
- OSD Lock Function: To lock the OSD, press and hold the Menu button while the monitor is off and then press power button to turn the monitor on. To un-lock the OSD - press and hold the Menu button while the monitor is off and then press power button to turn the monitor on.
- Eco Mode hot key : Press the Eco key continuously to select the Eco mode of brightness when there is no OSD (Eco mode hot key may not be available in all models).
- Volume adjustment hot key : When there is no OSD , press Volume (+) to active volume adjustment bar, press - or + to adjust volume (Only for the models with speakers).
- Auto configure hot key: When the OSD is closed, press Auto/Source button continuously about 2 second to do auto configure.

	Luminance	Adjust Range	Description
	Brightness	0-100	Backlight Adjustment
	Contrast	0-100	Contrast from Digital-register.
	Eco mode	Standard ☑	Standard Mode
			Text Mode

		Text	
		Internet	Internet Mode
		Game	Game Mode
		Movie	Movie Mode
		Sports	Sports Mode
	Gamma	Gamma1	Adjust to Gamma1
		Gamma2	Adjust to Gamma 2
		Gamma3	Adjust to Gamma 3
	DCR	Off	Disable dynamic contrast ratio
		On	Enable dynamic contrast ratio
	Image Setup		
	Clock	0-100	Adjust picture Clock to reduce Vertical-Line noise.
	Phase	0-100	Adjust Picture Phase to reduce Horizontal-Line noise
	H.Position	0-100	Adjust the verticalposition of the picture.
	V.Position	0-100	Adjust the horizontal position of the picture.
	Color Temp.		
	Warm	6500K	Recall Warm Color Temperature from EEPROM.
	Normal	7300K	Recall Normal Color Temperature from EEPROM.
	Cool	9300K	Recall Cool Color Temperature from EEPROM.
	sRGB		Recall SRGB Color Temperature from EEPROM.
	User	Red	Red Gain from Digital-register
		Green	Green Gain Digital-register.
		Blue	Blue Gain from Digital-register
	Color Boost		
	Full Enhance	on or off	Disable or Enable Full Enhance Mode
	Nature Skin	on or off	Disable or Enable Nature Skin Mode
	Green Field	on or off	Disable or Enable Green Field Mode
	Sky-blue	on or off	Disable or Enable Sky-blue Mode

	AutoDetect	on or off	Disable or Enable AutoDetect Mode
	Demo	on or off	Disable or Enable Demo
	Picture Boost		
	Frame Size	14-100	Adjust Frame Size
	Brightness	0-100	Adjust Frame Brightness
	Contrast	0-100	Adjust Frame Contrast
	H. position	0-100	Adjust Frame horizontal Position
	V.position	0-100	Adjust Frame vertical Position
	Bright Frame	on or off	Disable or Enable Bright Frame
	OSD Setup		
	H.Position	0-100	Adjust the verticalposition of OSD
	V.Position	0-100	Adjust the horizontal position of OSD
	Timeout	5-120	Adjust the OSD Timeout
	Transparence	0-100	Adjust the transparence of OSD
	Off Timer		Select the OSD language
	Language	0~24hours	Select timing to turn off the monitor.
	Extra		
	Input Select		
		Analog	Select Analog Sigal Source as Input
	Auto Config	yes or no	Auto adjust the picture to default
	Image Ratio	wide or 4:3	Select wide or 4:3 format for display
	DDC-CI	yes or no	Turn ON/OFF DDC-CI Support
	Information		Show the information of the main image and sub-image source
	Reset		
	Reset	yes or no	Reset the menu to default
	Exit		
	Exit		Exit the main OSD

LED Indicator

Status	LED Color
Full Power Mode	Green or Blue
Active-off Mode	Orange or red

4. Input/Output Specification

4.1 Input Signal Connector

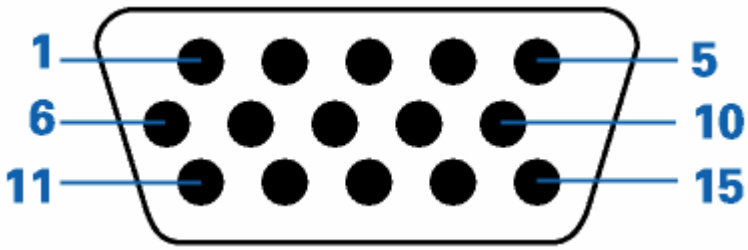

Pin Number	15-Pin Side of the Signal Cable	Pin Number	15-Pin Side of the Signal Cable
1	Video-Red	9	+5V
2	Video-Green	10	Ground
3	Video-Blue	11	N.C.
4	N.C.	12	DDC-Serial data
5	Detect Cable	13	H-sync
6	GND-R	14	V-sync
7	GND-G	15	DDC-Serial clock
8	GND-B		

4.2 Factory Preset Display Modes

STAND	RESOLUTION	HORIZONTAL FREQUENCY(kHZ)	VERTICAL FREQUENCY(Hz)
Dos-mode	720 x 400	31.47	70
VGA	640 x 480	31.47	60
VGA	640 x 480	37.5	75
SVGA	800 x 600	37.879	60
SVGA	800 x 600	46.875	75
XGA	1024 x 768	48.363	60
XGA	1024 x 768	56.476	70
XGA	1024 x 768	60.02	75
XGA	1024 x 768	48.78	60
XGA	1024 x 768	60.241	75
SXGA	1280 x 1024	64	60
SXGA	1280 x 1024	80	75
WXGA	1440×900	55.93	60

5 Panel Specification

5.1 Display Characteristics

M190MWW3

The M190MWW3 is a color active matrix thin film transistor (TFT) liquid crystal display (LCD) that uses amorphous silicon TFT as a switching device. It is composed of a TFT LCD panel, a timing controller, voltage reference, common voltage, driver DC-DC converter, column driver, and row driver circuit. This TFT LCD has a 19-inch diagonally measured active display area with WXGA+ resolution (1440 vertical by 900 horizontal pixel array).

Items	Specifications	Unit
Screen Diagonal	18.95 inch	inch
Active Area	408.24 (H) x 255.15 (V)	mm
Pixels H x V	1,440 (x3) x 900	
Pixel Pitch	0.2835 (per one triad) x 0.2835	mm
Pixel Arrangement	R.G.B. Vertical Stripe	
Display Mode	Normally White	
White Luminance	300 typical	cd/m^2 (CCFL@6.5mA)
Contrast Ratio	1000 : 1 typical	
Response Time	5 typical	msec
Input Voltage	+ 5.0 typical	v
Logic Power Consumption	3.0 typical (Black pattern, 60Hz)	watt
Backlight Power Consumption	19.5 typical (CCFL current 6.5mA)	watt
Weight	2,120 typ.	g
Outline Dimension	428 (W) x 278 (H) x15.5 (T) typical	mm
Electrical Interface (Logic)	6bit+Hi-FRC dual LVDS	
Support Color	16.7M	
Lamp Life Time	50,000(Ta=25+/-3degC and ICCFL=6.5mA, brightness becomes lower than 50% of initial value)	hours
Luminance Uniformity	1.3 typical (@9 points)	
Optimum Viewing Direction	6 o'clock	
Surface Treatment	Anti Glare + HC	

TPM190A1

TPM190A1(M190A1-P0A) is a 19" wide TFT Liquid Crystal Display module with 4 CCFL Backlight unit and 30 pins 2ch-LVDS interface. This module supports 1440 x 900 WXGA+ mode and can display 16.7M colors. The front metal frame for backlight is not built in, and need monitor front plastic bezel instead.

Item	Specification	Unit	Note
Diagonal Size	481.4 (18.95" diagonal)	mm	
Active Area	408.24 (H) x 255.15 (V)	mm	(1)
Bezel Opening Area	412.24 (H) x 259.15 (V)	mm	
Driver Element	a-si TFT active matrix	-	-
Pixel Number	1440 x R.G.B. x 900	pixel	-
Pixel Pitch	0.2835 (H) x 0.2835 (V)	mm	-
Pixel Arrangement	RGB vertical stripe	-	-
Display Colors	16.7M	color	-
Transmissive Mode	Normally White	-	-
Color saturation	72%NTSC (typ.)	-	-
Surface Treatment	Hard coating (3H), Anti-glare (Haze 25)	-	-

VDD Confidential do

Item		Min.	Typ.	Max.	Unit	Note
Module Size	Horizontal(H)	427.5	428	428.5	mm	(1)
	Vertical(V)	277.5	278	278.5	mm	
	Depth(D)	-	16.2	16.7	mm	
Weight		-	-	2300	g	-

Note (1) Please refer to the attached drawings for more information of front and back outline dimensions.

5.2 Optical Characteristics

M190MWW3

Item	Conditions	Specification		
		Min	Typ.	Max
Viewing Angle [degrees]	Horizontal (Right + Left)	140	160	--
K=Contrast Ratio>10	Vertical (Up + Down)	140	160	--
Contrast ratio		750	1000	--
Response Time [ms]	Rising + Falling	--	5	10
Color Chromaticity (CIE1931)	Red x	-0.03	0.640	+0.03
	Red y		0.329	
	Green x		0.283	
	Green y		0.598	
	Blue x		0.144	
	Blue y		0.068	
	White x		0.313	
	White y		0.329	
White Luminance [cd/m^2]	ICCFL=6.5mA	250	300	--
Luminance Uniformity	ICCFL=6.5mA, 9points	--	1.3	1.5

TPM190A1

Item		Symbol	Condition	Min.	Typ.	Max.	Unit
Color Chromaticity	Red	Rx	θ_x=0°, θ_Y =0° CS-1000T	Typ – 0.03	0.647	Typ + 0.03	
		Ry			0.334		
	Green	Gx			0.284		
		Gy			0.607		
	Blue	Bx			0.151		
		By			0.071		
	White	Wx			0.313		
		Wy			0.329		
Center Luminance of White		L_C		230	300	---	cd/m^2
Contrast Ratio		CR		630	1000	---	-
Response Time		T_R	θ_x=0°, θ_Y =0°	---	1.5	6.5	ms
		T_F		---	3.5	8.5	ms
White Variation		δW	θ_x=0°, θ_Y =0°	---	1.3	1.5	-
Viewing Angle	Horizontal	θ_x+	CR ≧ 10	75	85	---	Deg.
		θ_x-		75	85	---	
	Vertical	θ_Y+		70	80	---	
		θ_Y-		70	80	---	

Confidential Document

5.3 Electrical Characteristics

1.TFT LCD Module:

M190MWW3

SYMBOL	PARAMETER	Min	Design Point	Max	UNITS	CONDITION
ICCFL	CCFL current	3	6.5	8	[mArms]	Ta=25[deg C] (Note A)
FCCFL	CCFL Frequency	40	50	60	[kHz]	Ta=25[deg C] (Note B)
VCCFLi	Inverter Ignition Voltage	1560	--	--	[Vrms]	Ta=0[deg C] (Note C)
		1200	--	--		Ta=25[deg C] (Note C)
VCCFL	CCFL Voltage	648	720	792	[Vrms]	@ ICCFL=6.5mA Ta=25[deg C]

Note:
A. If it exceeds MIN/MAX values, then "CCFL Life", "ON/OFF Cycle", and "SAFETY" will not be guaranteed.
B. CCFL Frequency should be carefully determined to avoid interference between inverter and TFT LCD.
C. The voltage over specified value (VCCFLi) should be applied to the lamp more than 1 second after startup. Otherwise, the lamp may not be turned on. The used lamp current is the lamp typical current. The inverter should be able to give out a power that has a generating capacity of over 1560 voltage. Lamp units need to over 1560 voltage for ignition.

TPM190A1

Parameter		Symbol	Value			Unit
			Min.	Typ.	Max.	
Power Supply Voltage		Vcc	4.5	5.0	5.5	V
Ripple Voltage		V_{RP}	-	-	100	mV
Rush Current		I_{RUSH}	-	1.1	3	A
Power Supply Current	White	Icc	-	0.5	0.7	A
	Black		-	0.7	1	A
	Vertical Stripe		-	0.7	1	A
LVDS differential input voltage		Vid	100	-	600	mV
LVDS common input voltage		Vic	-	1.2	-	V

2.Back Light Unit:

M190MWW3

Parameter	Symbol	Min	Typ	Max	Unit	Conditions
Differential Input High Threshold	Vth	--	--	+100	mV	Vcm=+1.2V
Differential Input Low Threshold	Vtl	-100	--	--	mV	Vcm=+1.2V
Magnitude Differential Input Voltage	|Vid|	100	--	600	mV	
Common Mode Voltage	Vcm	1.0	1.2	1.4	V	Vth - Vtl = 200mV
Common Mode Voltage Offset	ΔVcm	-50	--	+50	mV	Vth - Vtl = 200mV

TPM190A1

Parameter	Symbol	Value			Unit	Note
		Min.	Typ.	Max.		
Lamp Input Voltage	V_L	---	775	853	V_{RMS}	I_L = 7.0 mA
Lamp Current	I_L	2.0	7.0	7.5	mA_{RMS}	
Lamp Turn On Voltage	V_S	---	---	1500(25℃)	V_{RMS}	
		---	---	1710(0℃)	V_{RMS}	
Operating Frequency	F_L	40	---	80	KHz	
Lamp Life Time	L_{BL}	50000	---	---	Hrs	
Power Consumption	P_L	---	21.7	---	W	I_L = 7.0 mA

6. Block Diagram

6.1 Software Flow Chat

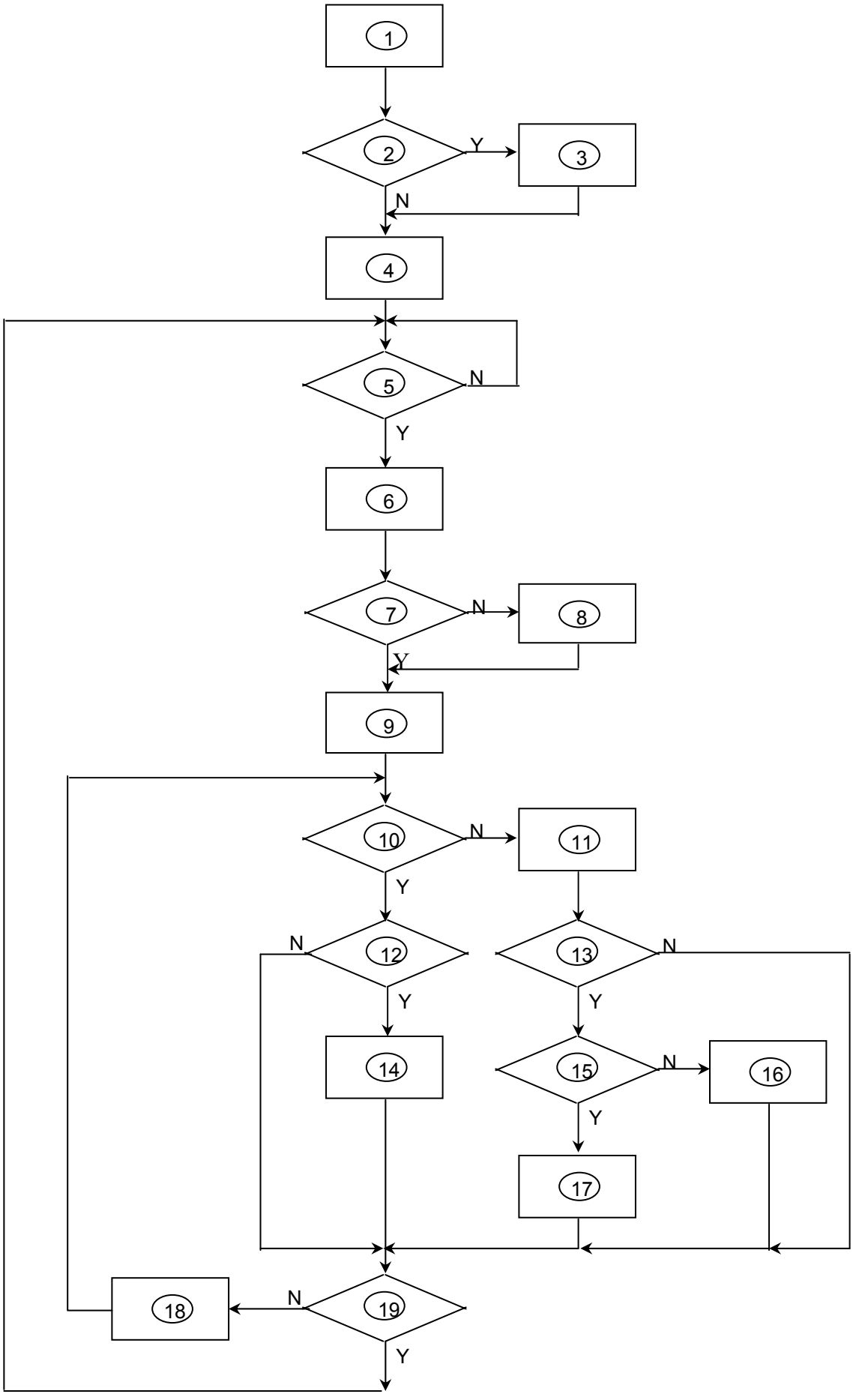

REMARK:

1) MCU initialize.
2) Is the EPROM blank?
3) Program the EPROM by default values.
4) Get the PWM value of brightness from EPROM.
5) Is the power key pressed?
6) Clear all global flags.
7) Are the AUTO and SELECT keys pressed?
8) Enter factory mode.
9) Save the power key status into EPROM.Turn on the LED and set it to green color.Scalar initializes.
10) In standby mode?
11) Update the lifetime of back light.
12) Check the analog port, are there any signals coming?
13) Does the scalar send out an interrupt request?
14) Wake up the scalar.
15) Are there any signals coming from analog port?
16) Display "No connection Check Signal Cable" message. And go into standby mode after the message disappear.
17) Program the scalar to be able to show the coming mode.
18) Process the OSD display.
19) Read the keyboard. Is the power key pressed?

6.2 Electric Block Diagram

6.2.1 Main Board

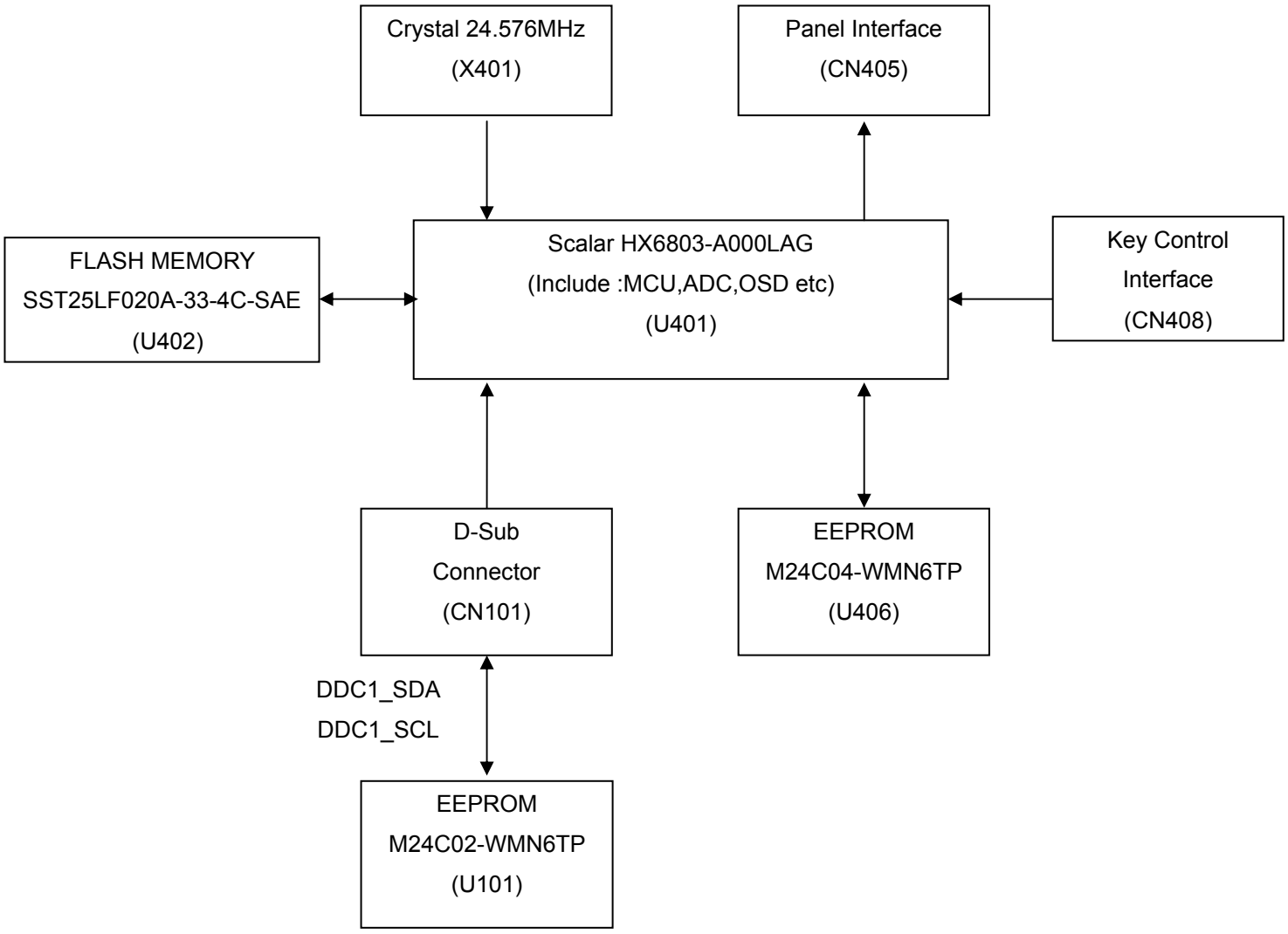

6.2.2 Inverter / Power Board

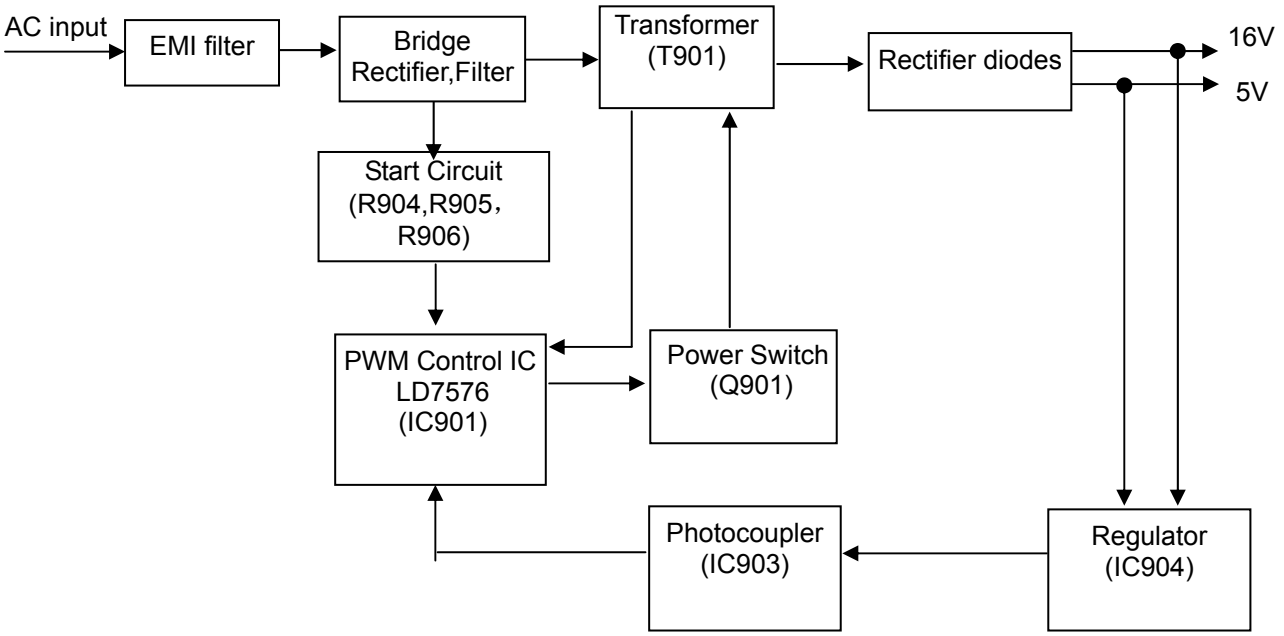

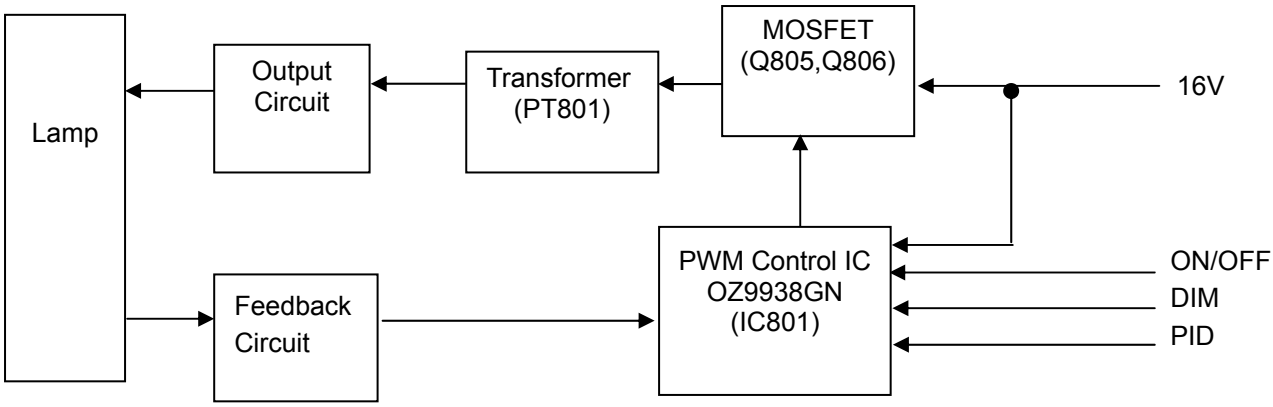

Audio

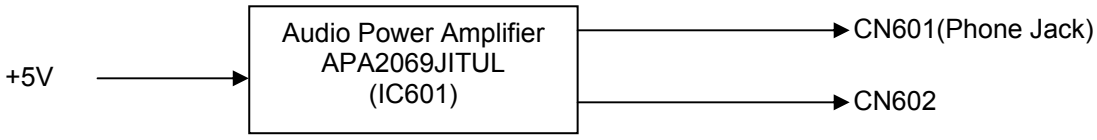

7. Schematic

7.1 Main Board

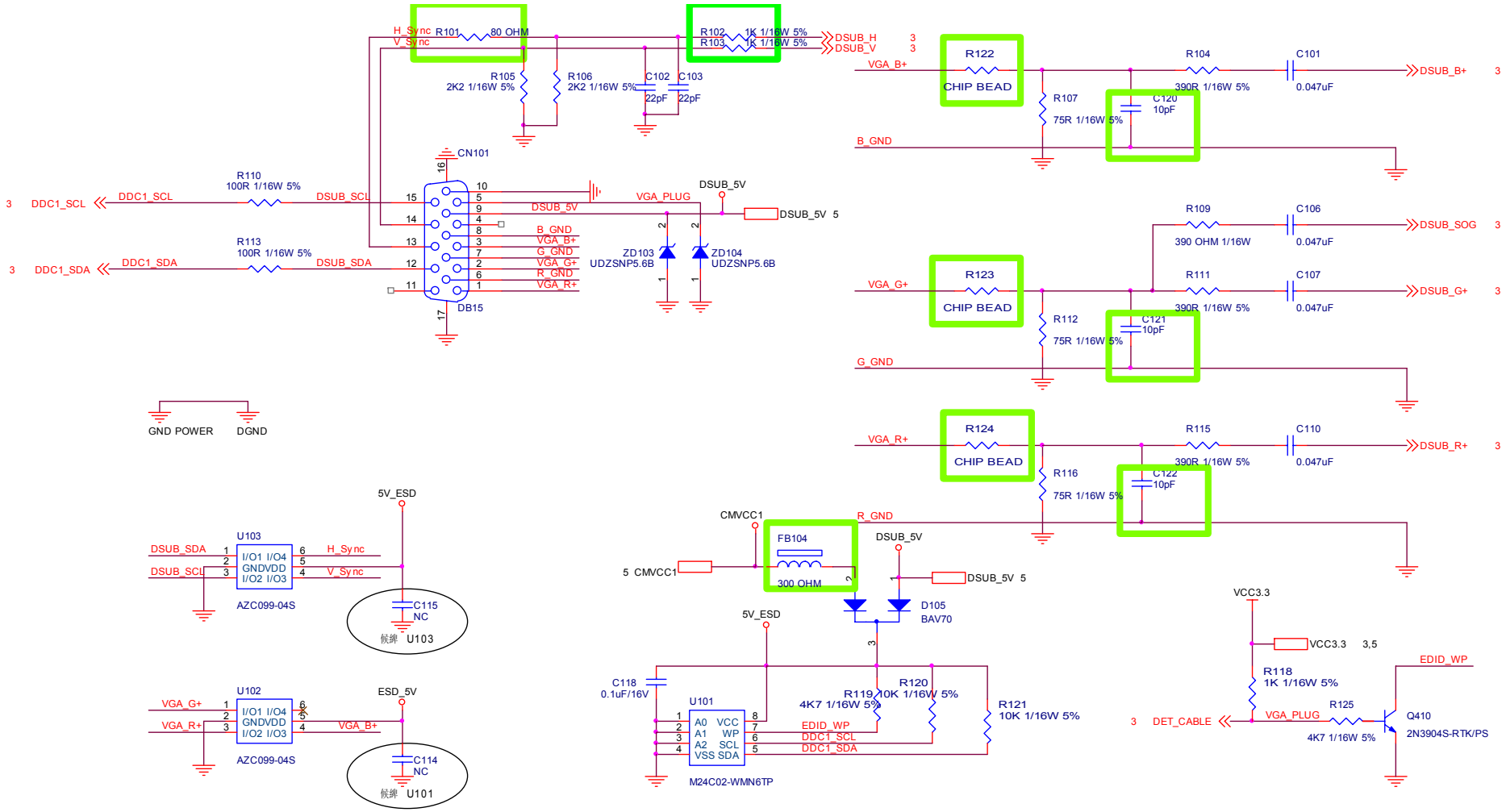

T P V (Top Victory Electronics Co., Ltd.)		OEM MODEL	TBD	Size	B
結 隔 瓜 銅 腹	G2681-1-4-X-1-090921	TPV MODEL	AOC 931SN	Rev	D
Key Component	02.Input	PCB NAME	G2681-1-4	称 爹	<称爹>
Date	Monday, September 21, 2009	Sheet	2 of 5		

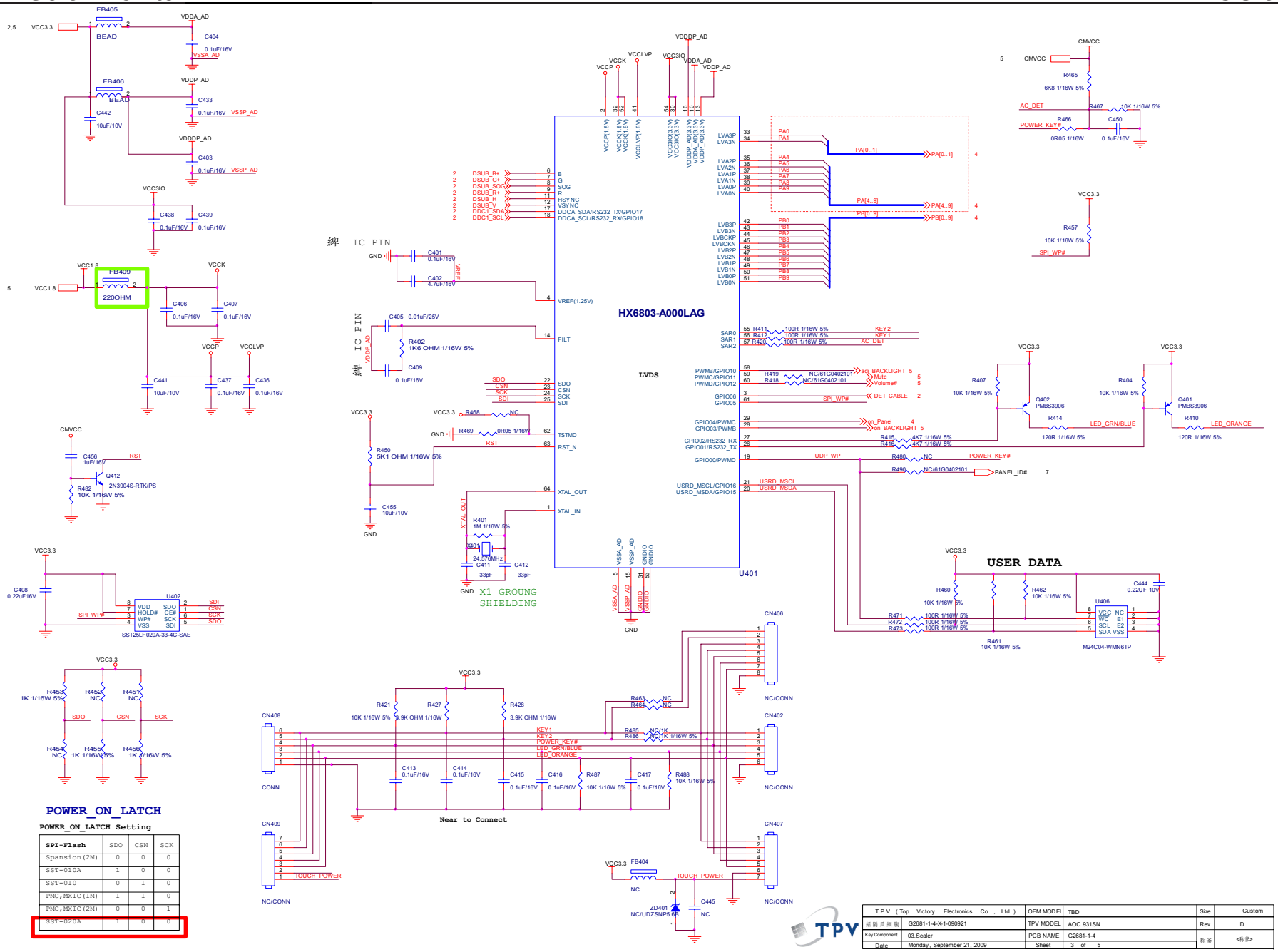
HX6803-A000LAG
U401
LVDS
IC PIN
X1 GROUNG SHIELDING
USER DATA
POWER_ON_LATCH
POWER_ON_LATCH Setting
SPI-Flash | SDO | CSN | SCK
Spansion(2M) 0 0 0
SST-010A 1 0 0
SST-010 0 1 0
PMC,MXIC(1M) 1 1 0
PMC,MXIC(2M) 0 0 1
SST-020A 1 0 0
Near to Connect
TPV
OEM MODEL TBD
TPV MODEL AOC 931SN
PCB NAME G2681-1-4
Sheet 3 of 5
G2681-1-4-X-1-090921
03.Scaler
Monday , September 21, 2009

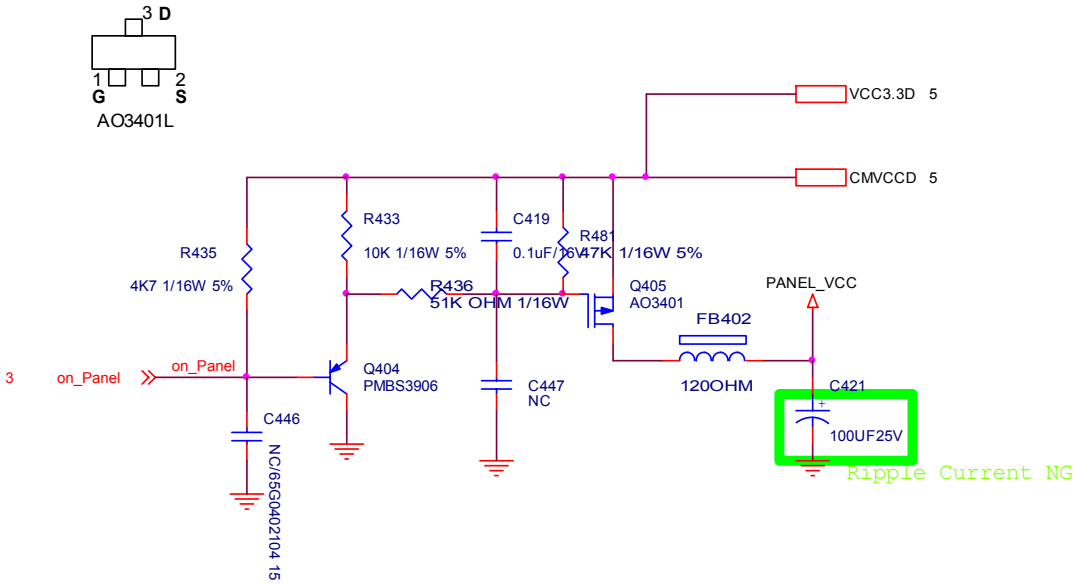

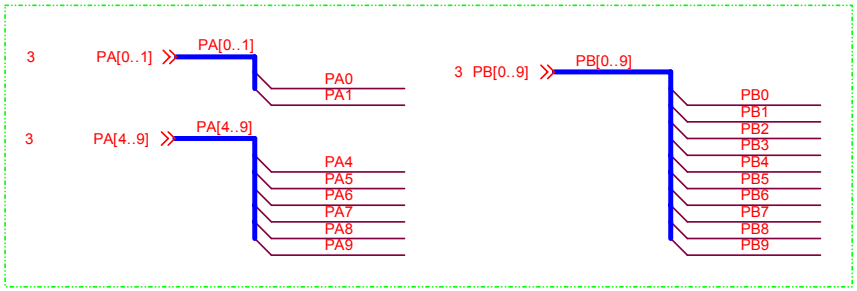

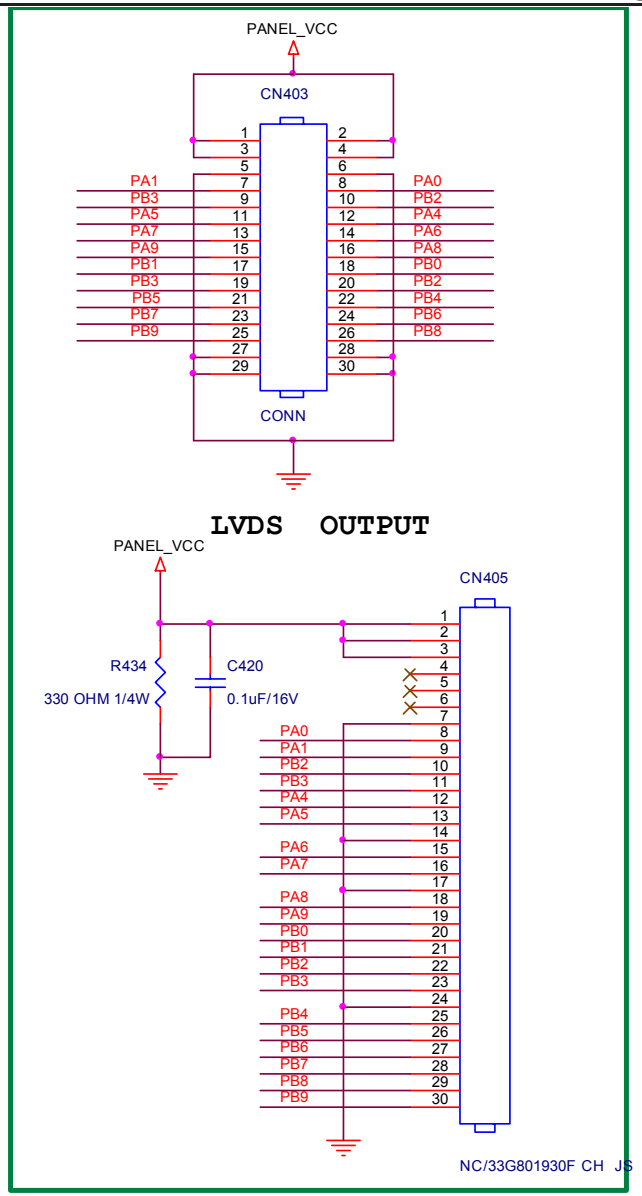

T P V （Top Victory Electronics Co . , Ltd. ）		OEM MODEL	TBD	Size	A4
結 隔 瓜 網 腹	G2681-1-4-X-1-090921	TPV MODEL	AOC 931SN	Rev	D
Key Component	04.Output	PCB NAME	G2681-1-4	称 爹	<称爹>
Date	Monday , September 21, 2009	Sheet	4 of 5		

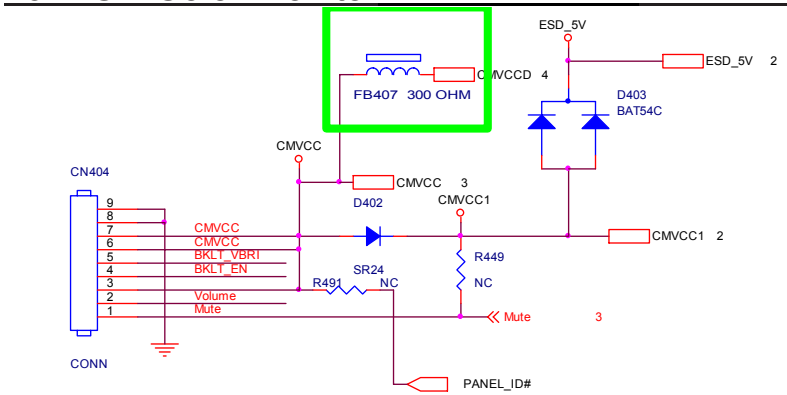

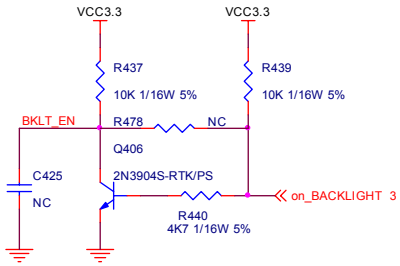

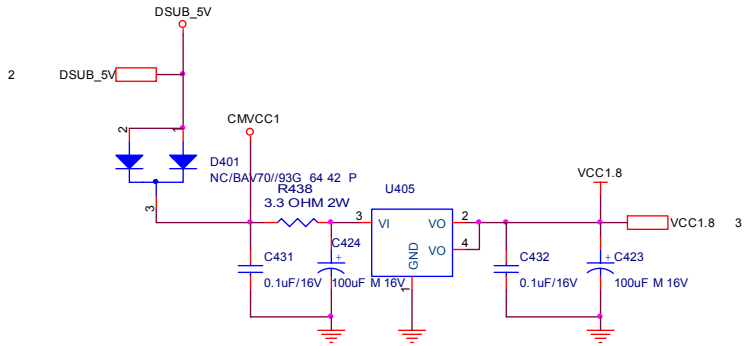

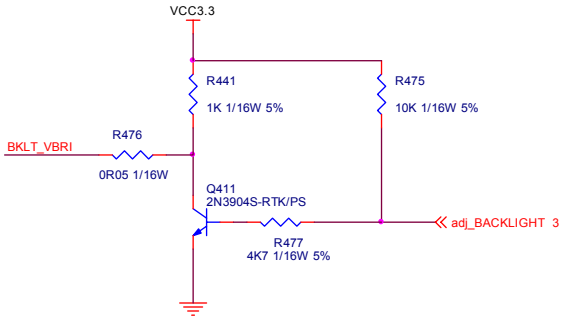

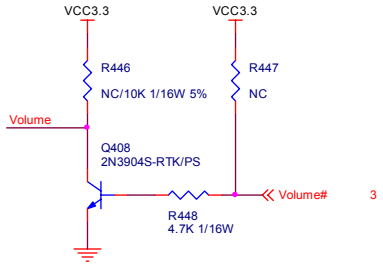

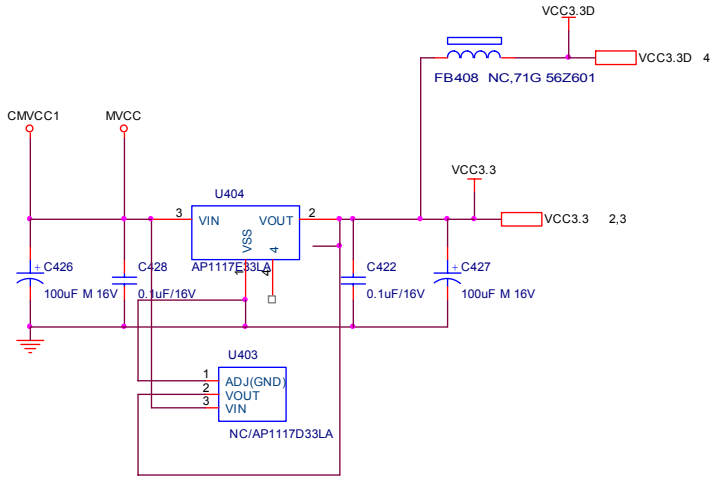

T P V (Top Victory Electronics Co., Ltd.)		OEM MODEL	TBD	Size	B
結 隔 瓜 銅 腹	G2681-1-4-X-1-090921	TPV MODEL	931SN	Rev	D
Key Component	05.POWER	PCB NAME	G2681-1-4	称 爹	<称爹>
Date	Monday, September 21, 2009	Sheet	5 of 5		

7.2 Power Board

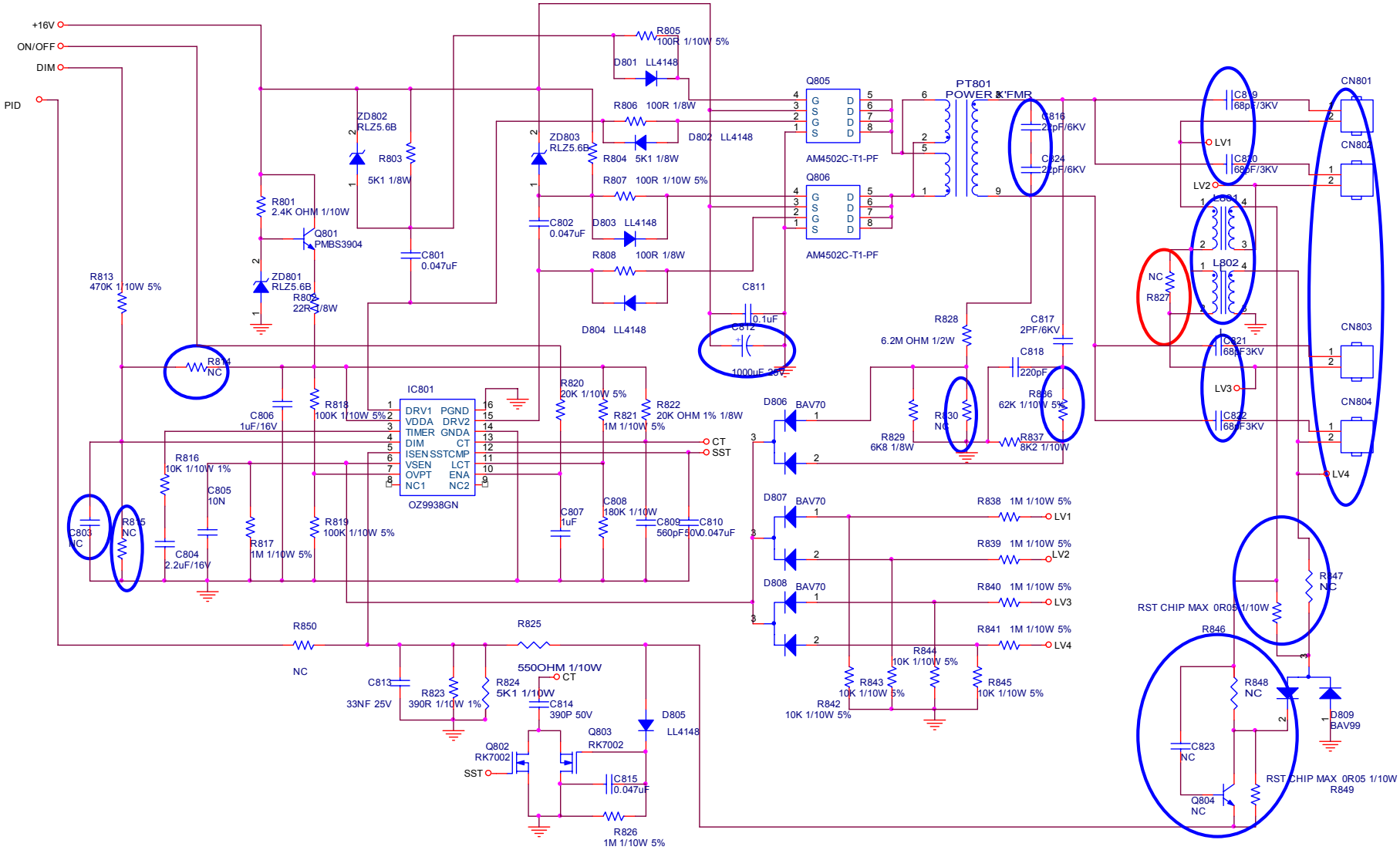

T P V (Top Victory Electronics Co., Ltd.)		OEM MODEL	919Swa	Size	Custom
結 隔 瓜 銅 股	G2824-2-X-X-4-090627	TPV MODEL	PWPC9941LHD1	Rev	2
Key Component	02.Inverter	PCB NAME	715G2824-2	称 爹	ODM MODEL
Date	Monday, June 29, 2009	Sheet	2 of 4		

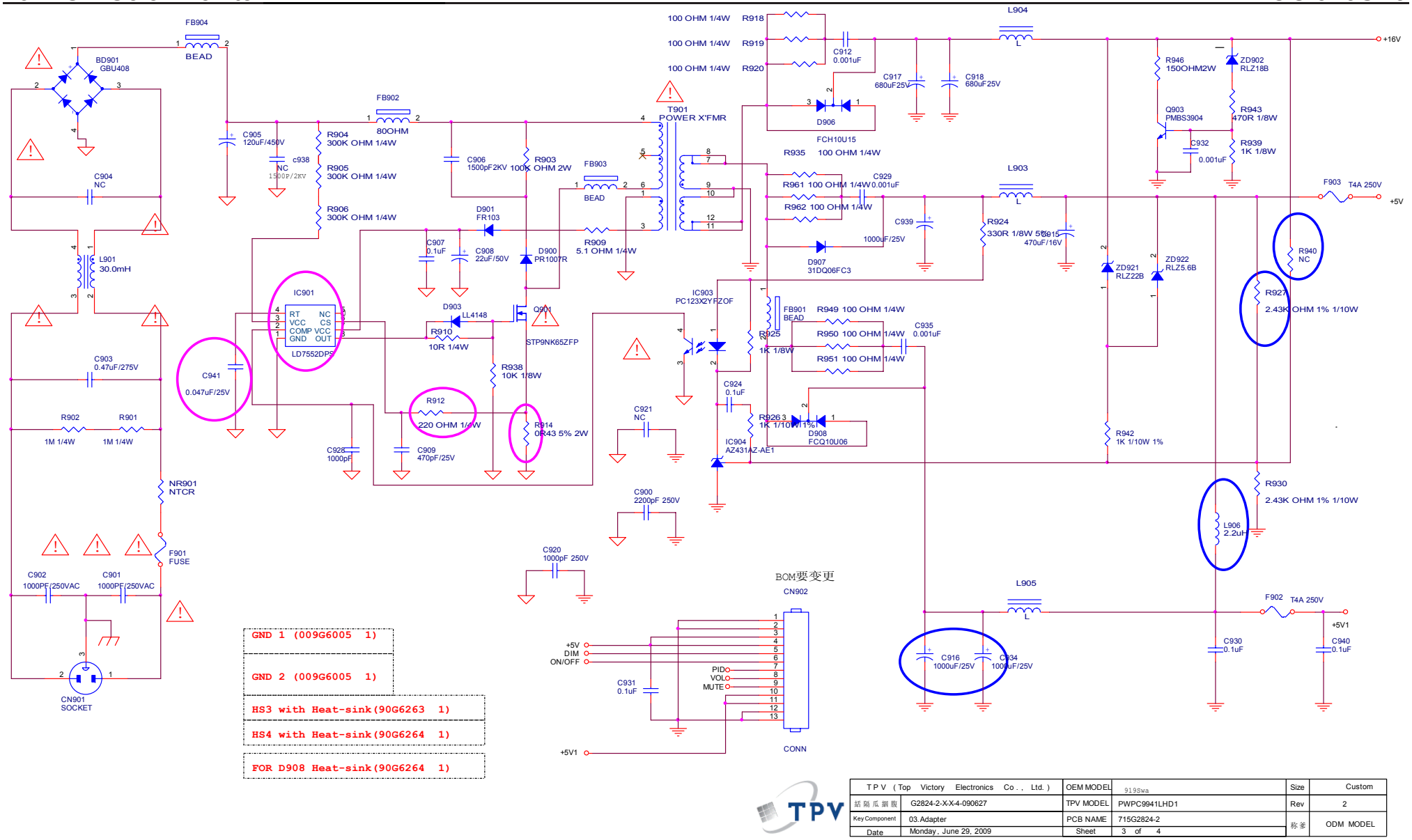

TPV (Top Victory Electronics Co., Ltd.)		OEM MODEL	919Swa	Size	Custom
結陽瓜鋼殷	G2824-2-X-X-4-090627	TPV MODEL	PWPC9941LHD1	Rev	2
Key Component	03.Adapter	PCB NAME	715G2824-2	称爹	ODM MODEL
Date	Monday, June 29, 2009	Sheet	3 of 4		

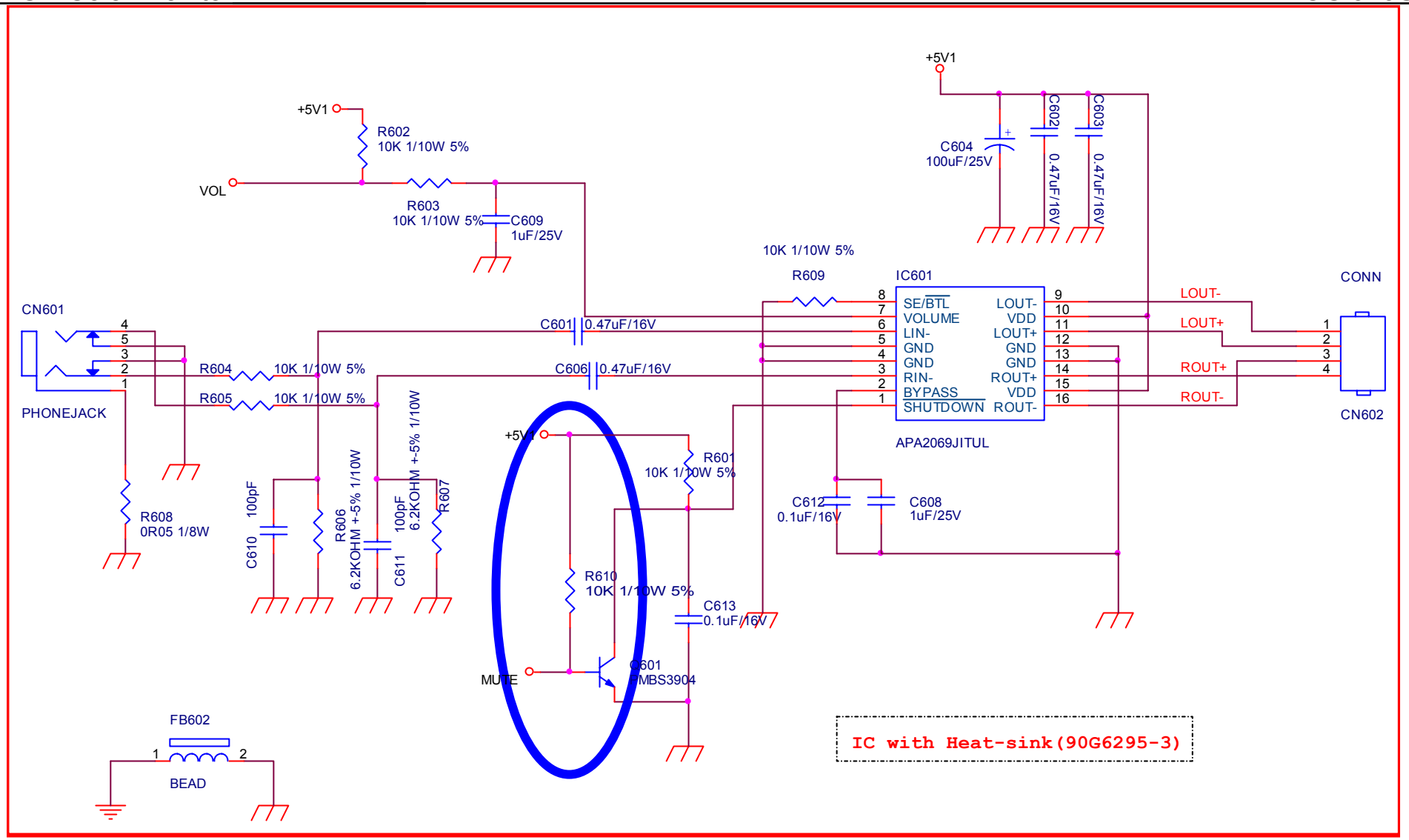

T P V (Top Victory Electronics Co., Ltd.)		OEM MODEL	919swa	Size	A
結 隔 瓜 網 腹	G2824-2-X-X-4-090627	TPV MODEL	PWPC9941LHD1	Rev	2
Key Component	04.AUDIO	PCB NAME	715G2824-2	称 爹	ODM MODEL
Date	Monday, June 29, 2009	Sheet	4 of 4		

8. PCB Layout

8.1 Main Board

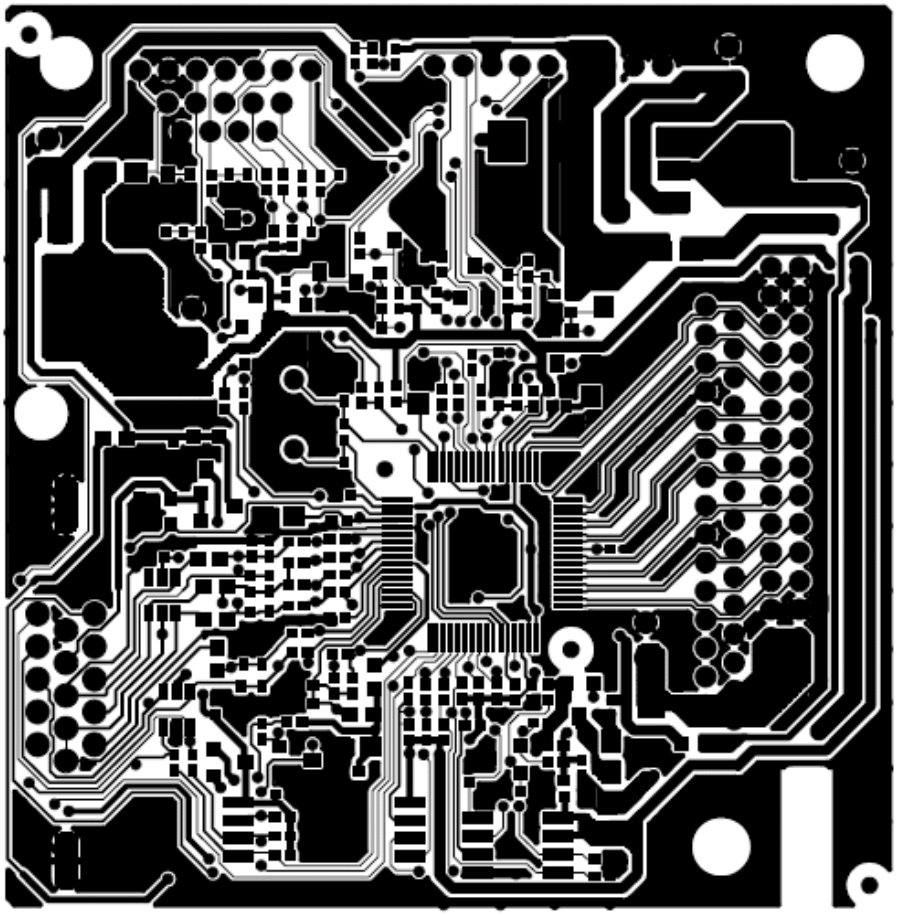

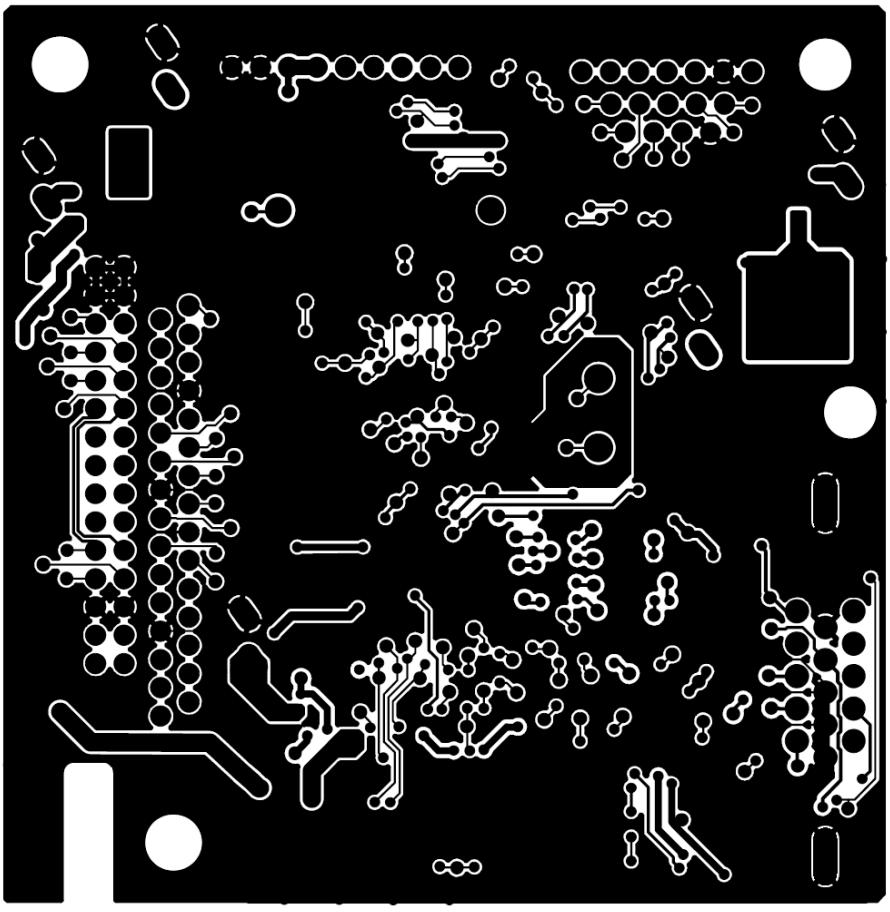

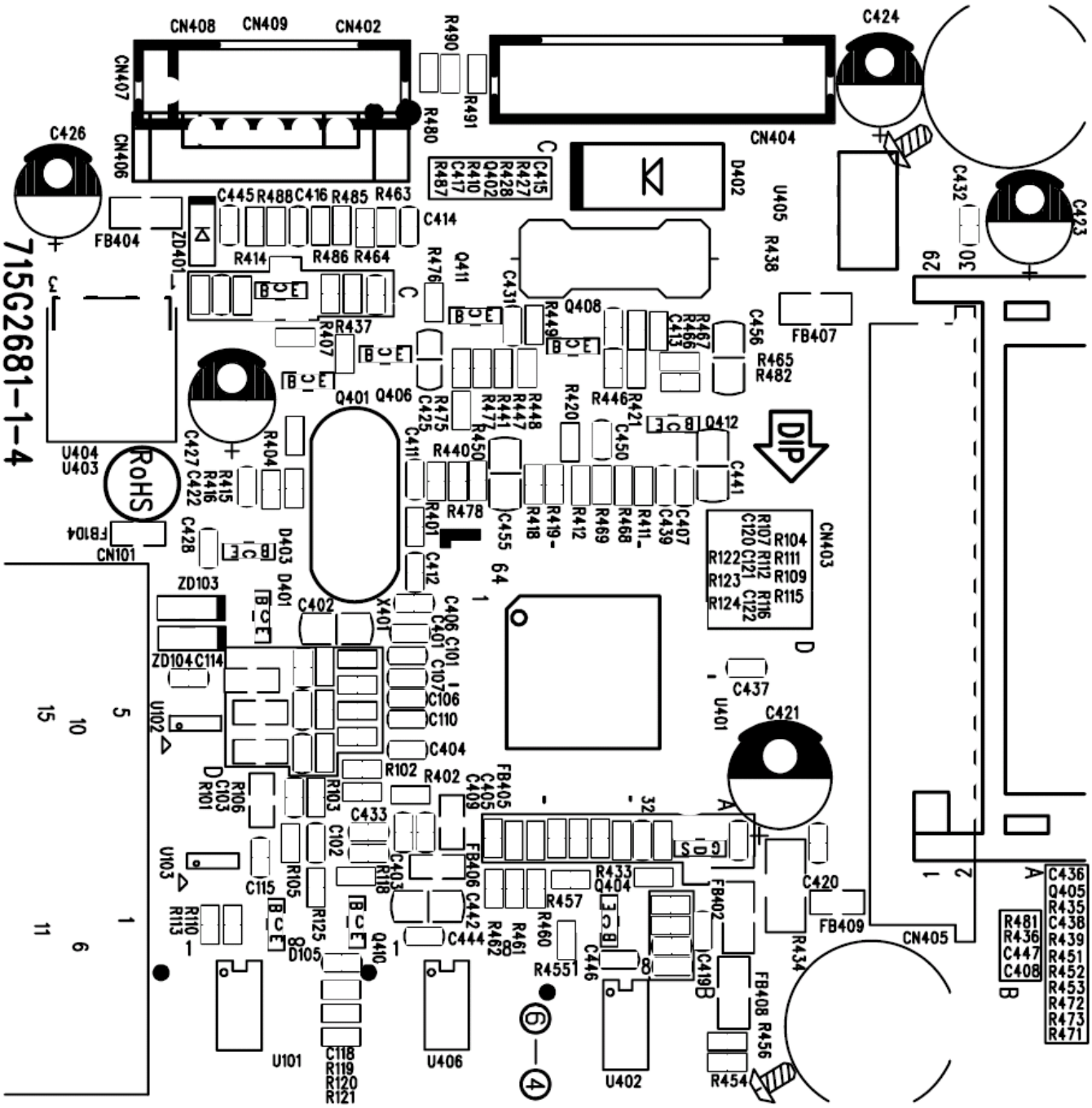
715G2681-1-4
CN408
CN409
CN402
CN407
CN406
CN404
CN403
CN405
CN101
C424
C426
C423
C432
FB404
FB407
FB409
FB408
FB402
FB810
U404
U403
U405
U401
U402
U101
U102
U103
U406
RoHS
DIP
D402
Q408
Q401
Q406
Q411
Q412
Q410
ZD401
ZD103
ZD104
C421
C420
C437
C456
R465
R482
R438
R454
R456
R434
R457
R4551
R481
R436
C447
C408
C436
Q405
R435
C438
R439
R451
R452
R453
R472
R473
R471

8.2 Power Board

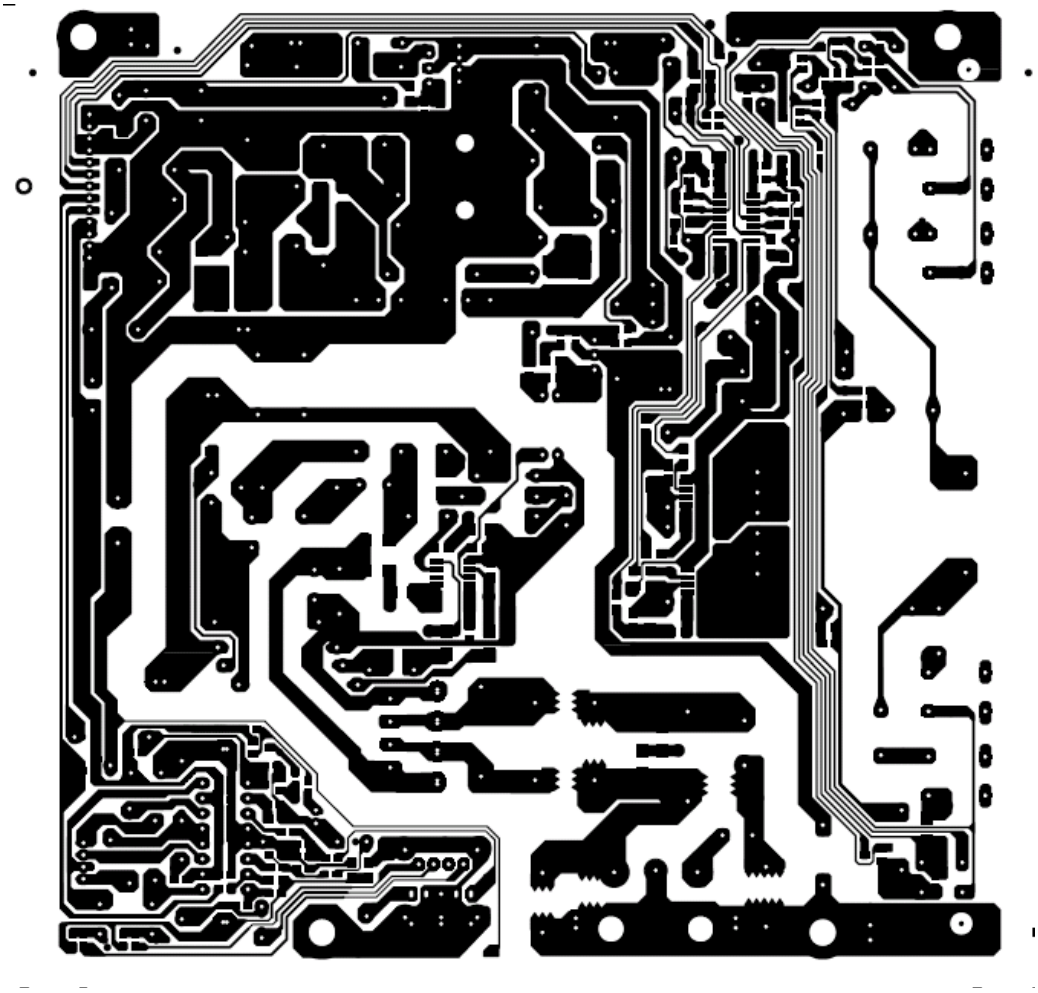

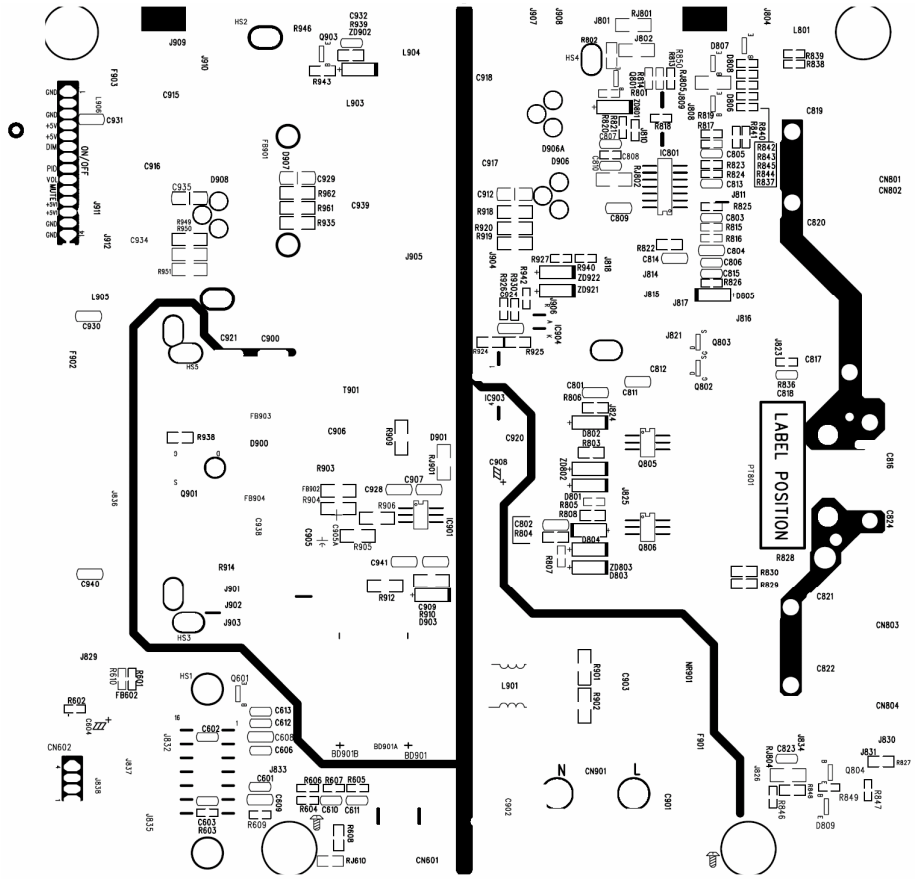

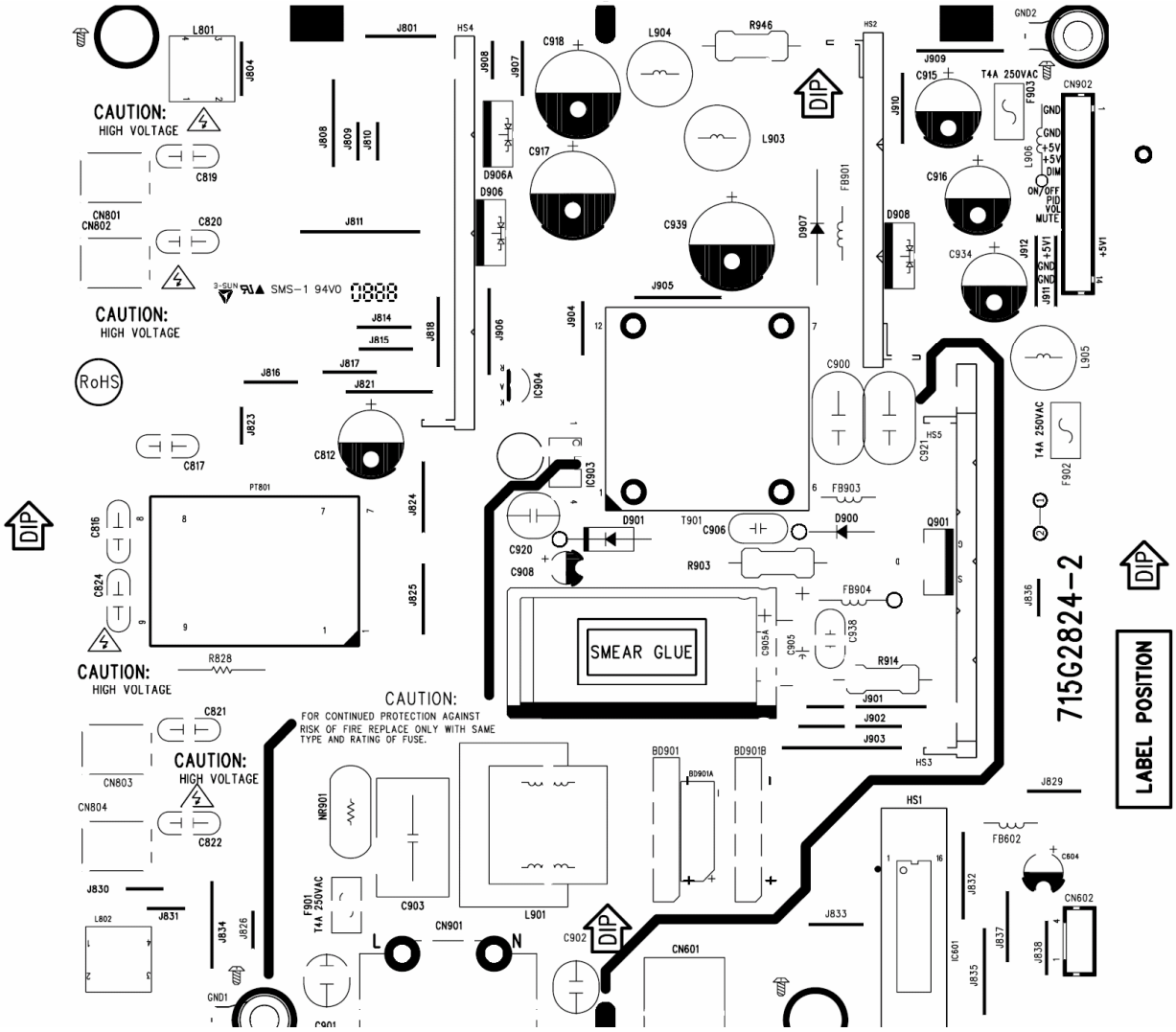
CAUTION:
HIGH VOLTAGE
CAUTION:
HIGH VOLTAGE
CAUTION:
HIGH VOLTAGE
CAUTION:
HIGH VOLTAGE
CAUTION:
FOR CONTINUED PROTECTION AGAINST
RISK OF FIRE REPLACE ONLY WITH SAME
TYPE AND RATING OF FUSE.
SMEAR GLUE
715G2824-2
LABEL POSITION
RoHS
DIP
SMS-1 94V0
T4A 250VAC
L
N

8.3 Key Board

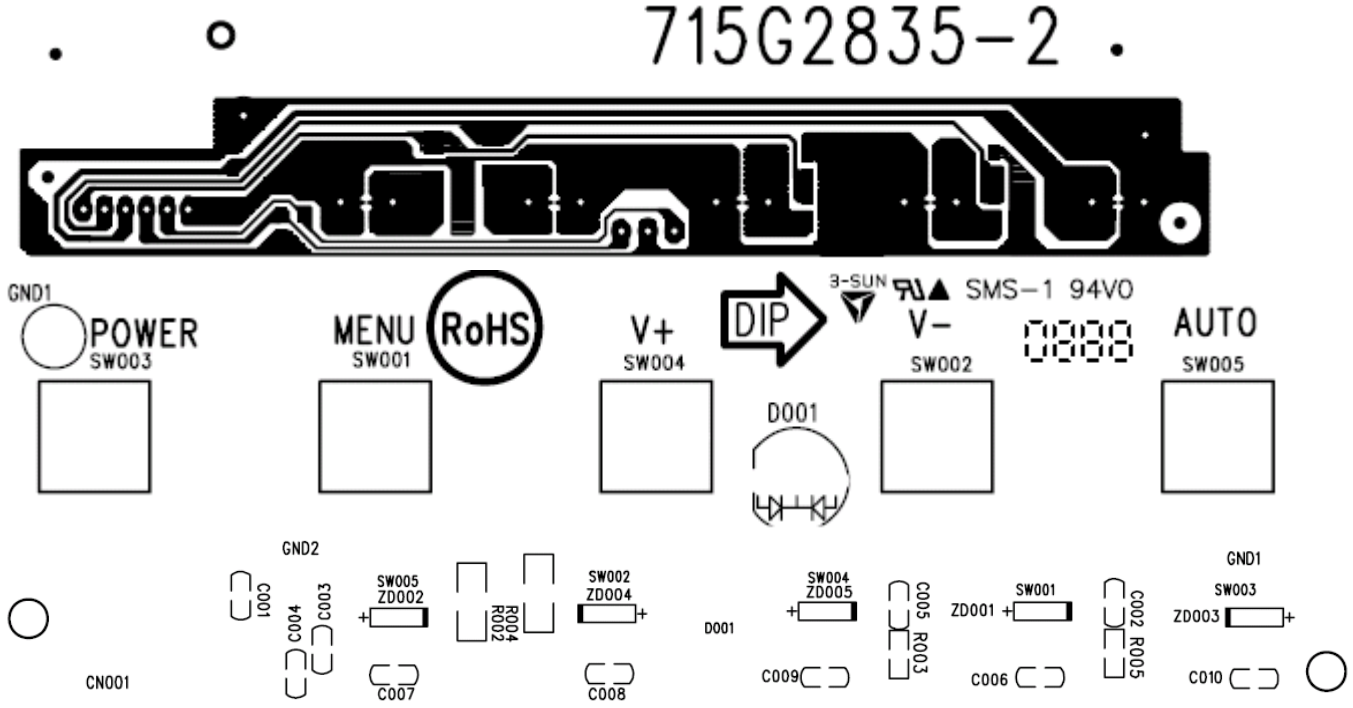
715G2835-2
GND1
POWER
SW003
MENU
SW001
RoHS
V+
SW004
DIP
3-SUN
SMS-1 94V0
V-
SW002
AUTO
SW005
D001
GND2
C001
C004
C003
SW005
ZD002
R004
R002
SW002
ZD004
CN001
C007
C008
SW004
ZD005
C005
R003
C009
SW001
ZD001
C006
C002
R005
GND1
SW003
ZD003
C010

9. Maintainability

9.1 Equipments and Tools Requirement

1. Voltmeter.
2. Oscilloscope.
3. Pattern Generator.
4. DDC Tool with an IBM Compatible Computer.
5. Alignment Tool.
6. LCD Color Analyzer.
7. Service Manual.
8. User Manual.

9.2 Trouble Shooting

9.2.1 Main Board

1. NO SCREEN APPEAR

No power

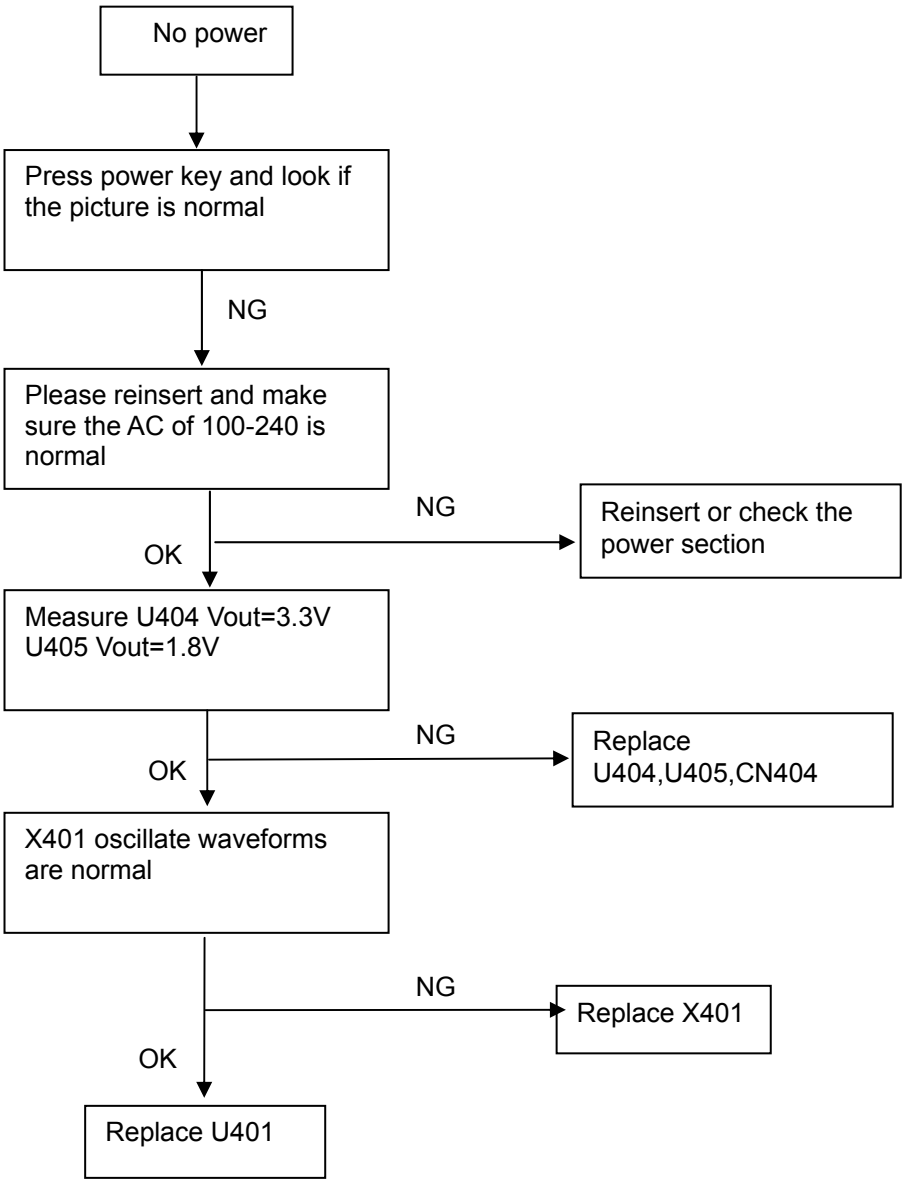

No picture (LED orange)

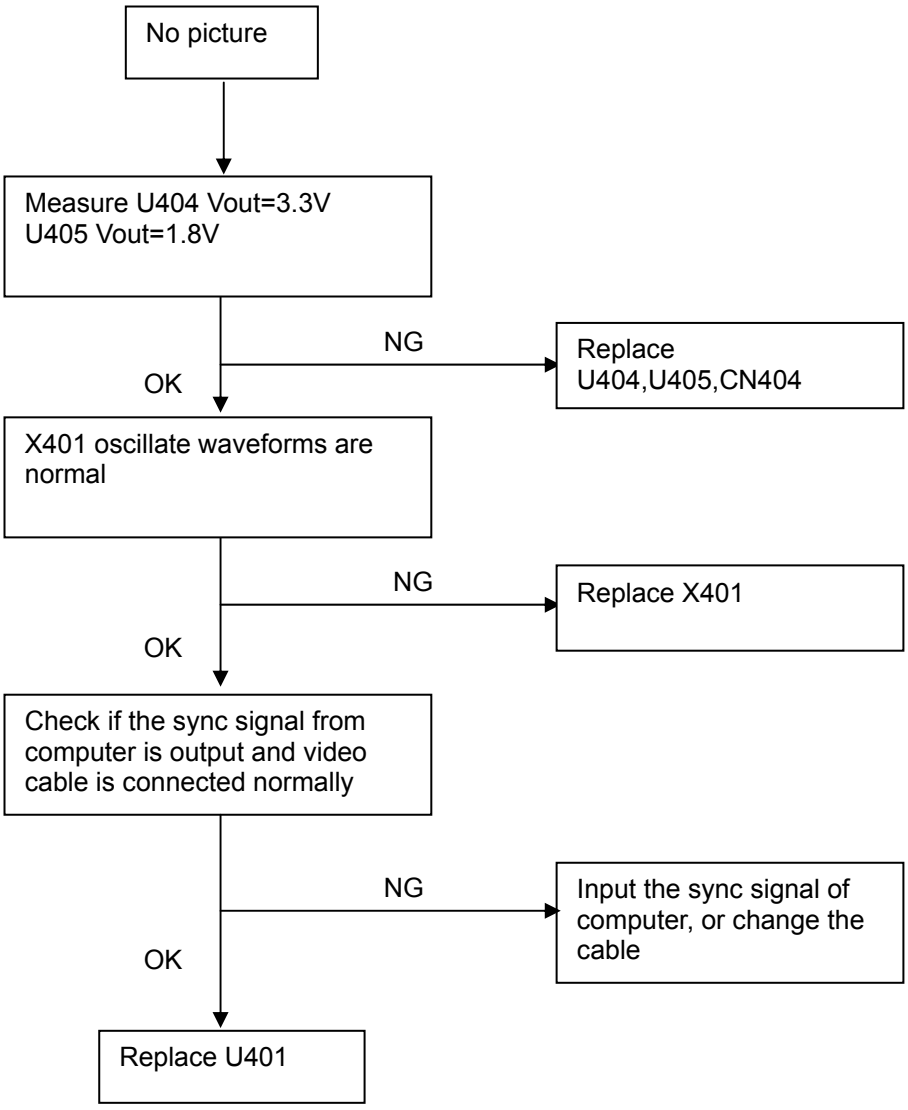

White Screen

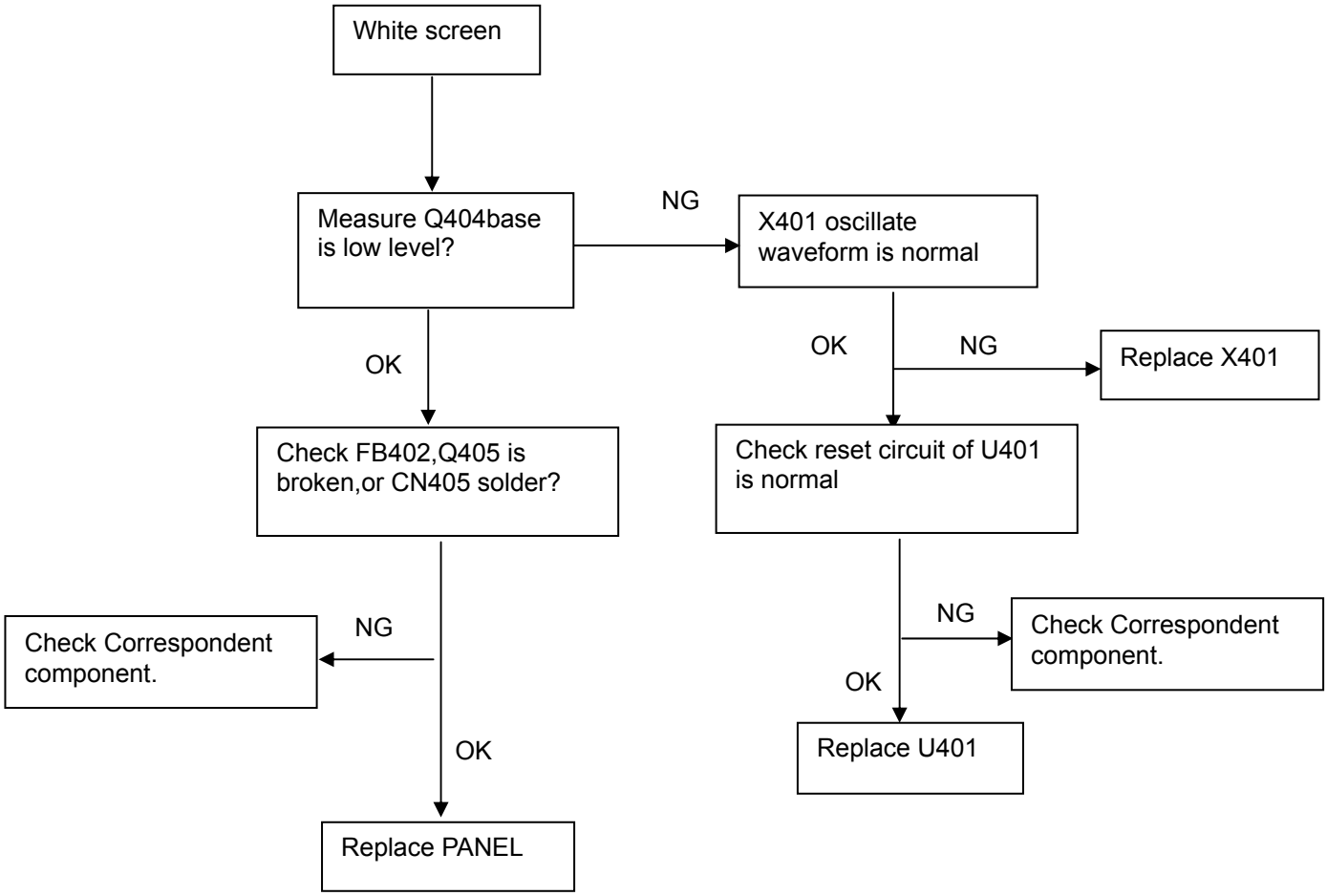

9.2.2 Power Board

1. No Power

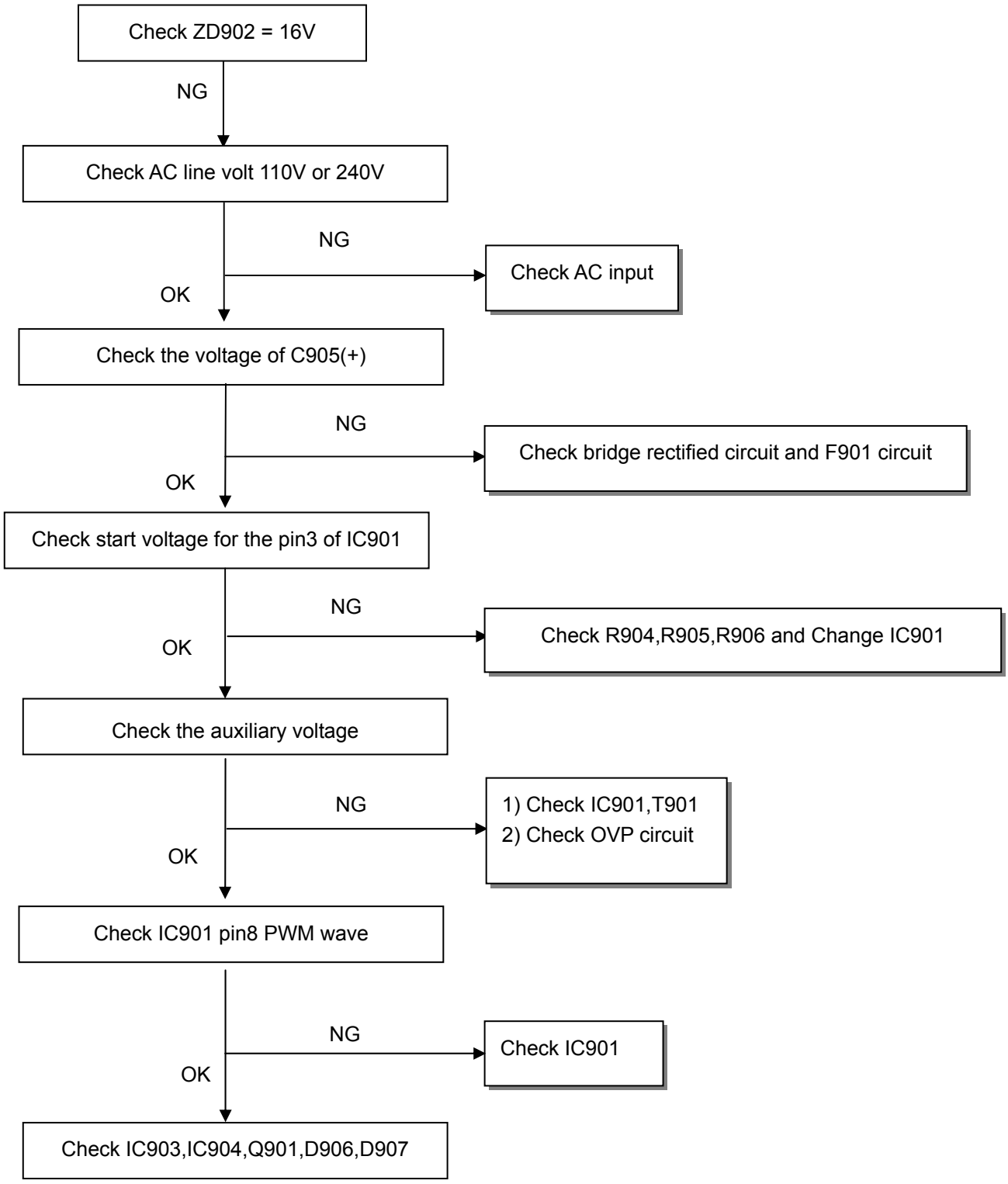

2. W/LED No Backlight

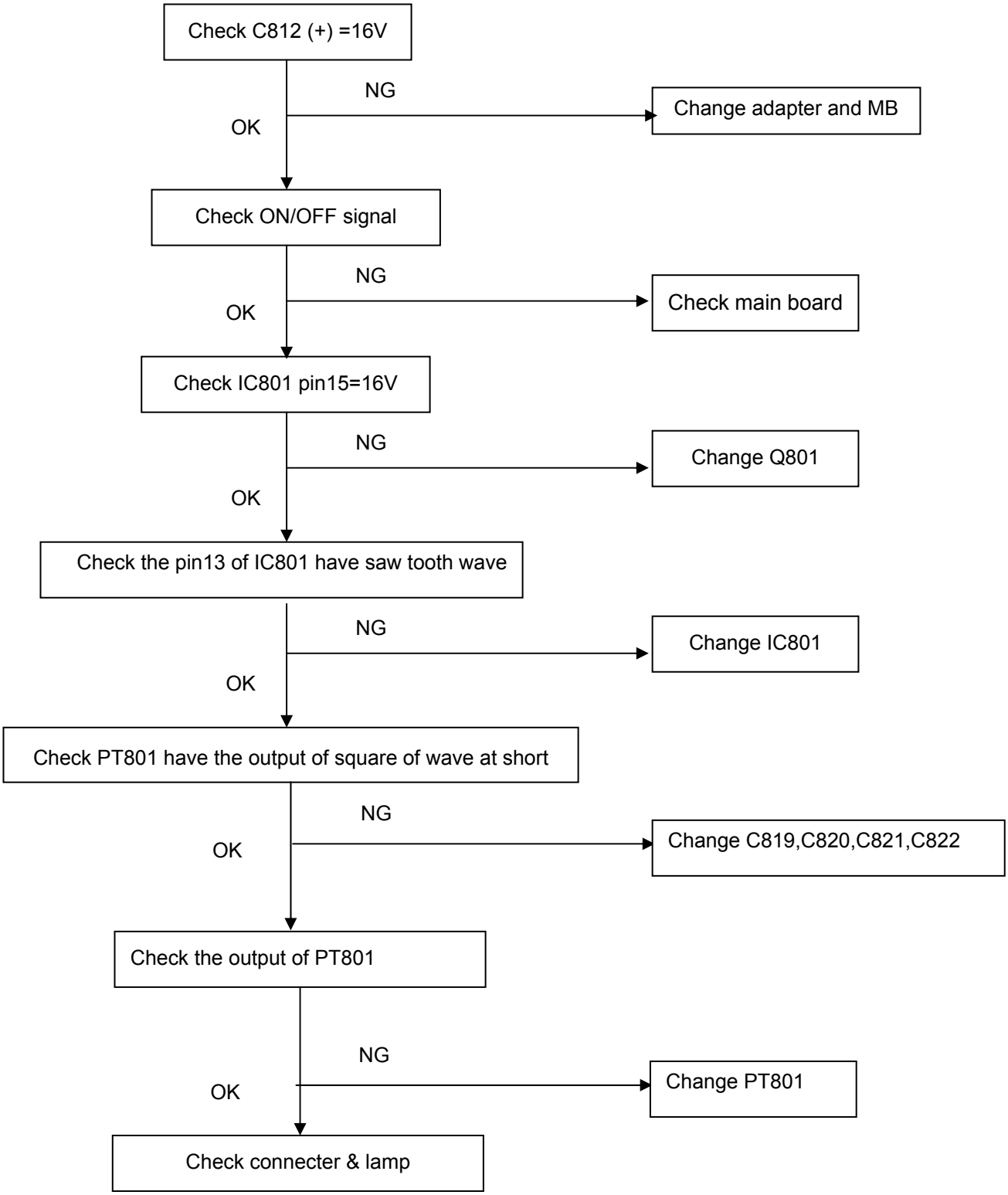

9.2.3 Key Board

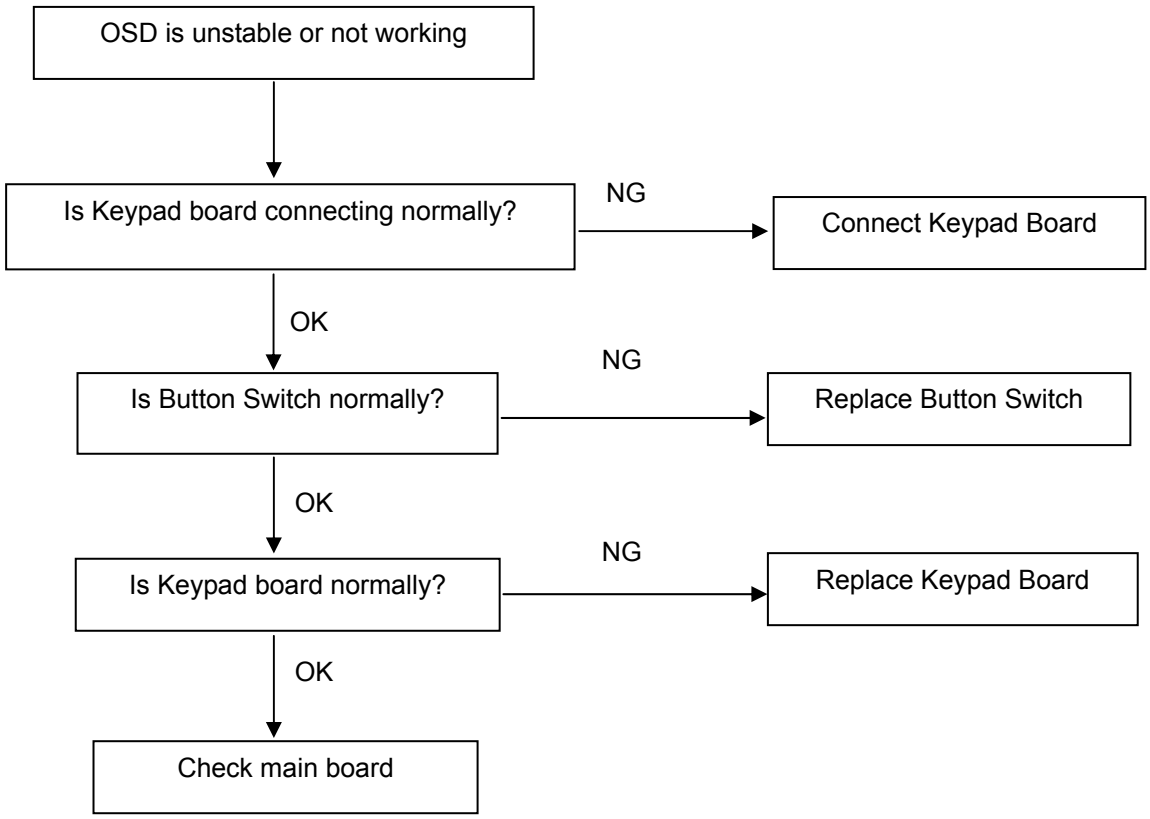

10. White- Balance, Luminance Adjustment

Approximately 30 minutes should be allowed for warm up before proceeding white balance adjustment.

Before started adjust white balance , please set the Chroma-7120 MEM Channel 3 to Warm (6500K) color, MEM Channel 4 to Normal (7300K) color, MEM Channel 9 to Cool (9300K) color , and MEM Channel 10 to sRGB color (our Warm color parameter is x = 283 ±30, y = 297 ±30, Y=180cd/m^2; Normal color parameter is x = 301 ±30, y = 317 ±30, Y=190cd/m^2; Cool color parameter is x = 313 ±30, y = 329 ±30, Y = 200 cd/m2; sRGB color parameter is x = 313 ±30, y = 329 ±30, Y = 180cd/m2)

How to setting MEM channel you can reference to chroma 7120 user guide or simple use " SC" key and " NEXT" Key to modify xyY value and use "ID" key to modify the TEXT description Following is the procedure to do white-balance adjust .

2. Setting the color temp. you want

A. MEM.CHANNEL 3 (Warm color):

Warm color temp. parameter is x = 283 ±30, y = 297 ±30, Y=180cd/m^2

B. MEM.CHANNEL 4 (Normal color):

Normal color temp. parameter is x = 301 ±30, y = 317 ±30, Y=190cd/m^2

C. MEM.CHANNEL 9 (Cool color):

Cool color temp. parameter is x = 313 ±30, y = 329 ±30, Y = 200 cd/m2

D. MEM.CHANNEL 10 (sRGB color):

sRGB color temp. parameter is x = 313 ±30, y = 329 ±30, Y = 180cd/m2

3. Into Factory mode of AOC 919Swa

Press the MENU button, pull out the power cord, and then plug the power cord. Then the factory OSD will be at the left top of the panel.

4. Bias adjustment:

Set the **Contrast** to 50; Adjust the **Brightness** to 90.

5. Gain adjustment:

Move cursor to "-F-" and press MENU key

A. Adjust Warm (6500K) color-temperature

1. Switch the chroma-7120 to **RGB-Mode** (with press "MODE" button)
2. Switch the MEM.channel to Channel 3 (with up or down arrow on chroma 7120)
3. The LCD-indicator on chroma 7120 will show x = 283 ±30, y = 297 ±30, Y=180cd/m^2
4. Adjust the RED of color3 on factory window until chroma 7120 indicator reached the value R=100
5. Adjust the GREEN of color3 on factory window until chroma 7120 indicator reachedthe value G=100
6. Adjust the BLUE of color3 on factory window until chroma 7120 indicator reached the value B=100
7. Repeat above procedure (item 4,5,6) until chroma 7120 RGB value meet the tolerance =100±2

B. Adjust Normal (7300K) color-temperature

1. Switch the chroma-7120 to **RGB-Mode** (with press "MODE" button)
2. Switch the MEM.channel to Channel 4(with up or down arrow on chroma 7120)
3. The LCD-indicator on chroma 7120 will show x = 301 ±30, y = 317 ±30, Y=190cd/m^2
4. Adjust the RED of color3 on factory window until chroma 7120 indicator reached the value R=100
5. Adjust the GREEN of color3 on factory window until chroma 7120 indicator reachedthe value G=100
6. Adjust the BLUE of color3 on factory window until chroma 7120 indicator reached the value B=100
7. Repeat above procedure (item 4,5,6) until chroma 7120 RGB value meet the tolerance =100±2

C. Adjust Cool (9300K) color-temperature

1. Switch the Chroma-7120 to **RGB-Mode** (with press “MODE” button)
2. Switch the MEM. Channel to Channel 9 (with up or down arrow on chroma 7120)
3. The LCD-indicator on chroma 7120 will show x = 313 ±30, y = 329 ±30, Y = 200 cd/m2
4. Adjust the RED of color1 on factory window until chroma 7120 indicator reached the value R=100
5. Adjust the GREEN of color1 on factory window until chroma 7120 indicator reached the value G=100
6. Adjust the BLUE of color1 on factory window until chroma 7120 indicator reached the value B=100
7. Repeat above procedure (item 4,5,6) until chroma 7120 RGB value meet the tolerance =100±2

D. Adjust sRGB color-temperature

1. Switch the chroma-7120 to **RGB-Mode** (with press “MODE” button)
2. Swit ch the MEM.channel to Channel 10 (with up or down arrow on chroma 7120)
3. The LCD-indicator on chroma 7120 will show x = 313 ±30, y = 329 ±30, Y = 180cd/m2
4. Adjust the RED of color3 on factory window until chroma 7120 indicator reached the value R=100
5. Adjust the GREEN of color3 on factory window until chroma 7120 indicator reachedthe value G=100
6. Adjust the BLUE of color3 on factory window until chroma 7120 indicator reached the value B=100
7. Repeat above procedure (item 4,5,6) until chroma 7120 RGB value meet the tolerance =100±2

E. Turn the Power-button off to quit from factory mode.

11. Monitor Exploded View

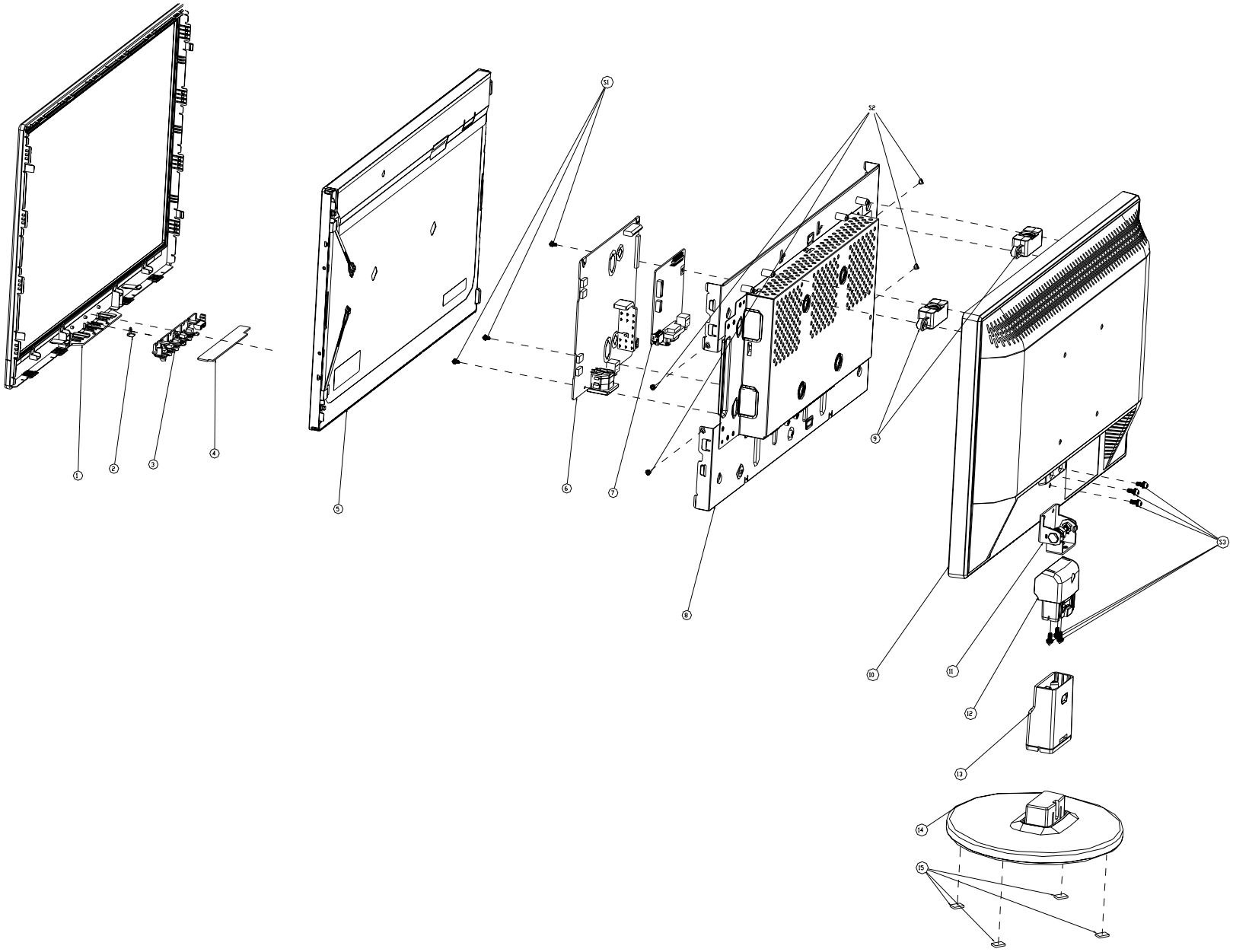

Item	Description	Item	Description
1	BEZEL(L19WA-8Q1A)	11	HINGE
2	LENS	12	STAND TOP
3	KEY PAD	13	STAND
4	KEY BOARD	14	BASE8S2
5	PANEL	15	FOOT
6	POWERBOARD	S1	SCREW
7	MAIN BOARD	S2	SCREW
8	MAIN FRAME	S3	SCREW
9	SPK	S4	SCREW
10	REAR COVER19"		

12. BOM List

Note: The parts information listed below are for reference only, and are subject to change without notice. Please go to http://cs.tpv.com.cn/hello1.asp for the latest information.

T99LHDDBWKA1ANE

Location	Part NO.	Description	Remark
	040G 58162435A	P/N LABEL FOR MANUAL PE BAG	
	041G780061553A	TCO'03 CARD	
	050G 600 1 W	WHITE STRAP (1G004991)	
	050G 600 3	HANDLE2	
	050G 600 4	HANDLE 1	
	052G 1150 C	INSULATING TAPE	
	052G 1186	SMALL TAPE	
	052G 1207 A	Conductive Tape 45mm *25mm *0.08mm	
	052G 1211 B	Conductive Tape 85mm *40mm *0.09mm	
	052G 1211527	Conductive Tape 75mm *45mm *0.08mm	
	052G6019 1	INSULATING TAPE	
E07801	078G 322514 K	SPK 8 OHM 1.5W 43X18 280 320mm KUAIDA	
	089G 173 56 4B	AUDIO CABLE	
E08902	089G 715HAAE01	SIGNAL CABLE	
	089G179J30N517	FFC CABLE	
E08901	089G404A15N IS	POWER CORD	
E09503	095G8014 6TE01	HARNESS 6P-6P 160MM	
	0D1G1730 8120	SCREW	
	0M1G 130 5120	SCREW	
	705GH834068	19" STAND ASS'Y	
E750	750GLJ190W3011N000	PANEL M190MWW3 R01 KS IVO	
	AM1G1740 12 47 CR3	SCREW	
	H15G0245O02	MAIN FRAME	
	H26G 800504 2A	barcode	
	H40G 19N61579A	ID LABEL	
	H40G 582615 9B	CARTON LABEL	
	H40G 58261510A	TCO BASIC SILVE LABEL	
	H41G780061597A	QSG	
	H44G9033101	EPS	
	H44G9033201	EPS	
	H44G9033615 5B	CARTON	
	H45G 77 6	PE PACKING	
	H45G 87 18 4H A	EPE COVER	
	H70G200961521C	CD MANUAL	
	KEPC7QAK	KEY BOARD	
	PWPC9941LHD1	POWER BOARD	
	Q33G0170ABJ 1L0100	key pad	
	Q33G0171 1 1C0100	LENS	
	Q34G0265ABJC8B0100	REAR COVER19"	
	Q34G0316BBLC1B0130	BEZEL(L19WA-8Q1A)	
	Q45G 76 28 H A	PE BAG FOR MANUAL	
	Q50G 4 10	TIE (Y1900221)	
	Q52G 1185 99	big carton tape for aoc	
	AM1G1740 10120	SCREW(M4*10)	
	H34G0026AED 1B0100	STAND	
	Q34G0299AED 1B0130	BASE8S2	
	Q37G0067015	HINGE	
	756GH9CB A1048	MAIN BOARD-CBPC9HDA1H1	
U402	056G1133 81	SST25LF020A-33-4C-SAE	
SMTCR-U402	100GAHL9001W11	MCU ASS'Y-056G1133 81	
CN408	033G3802 6B Y W	WAFER	

CN404	033G3802 9B Y W	WAFER	
CN405	033G801930F CH JS	CONNECTOR	
	040G 45762412B	CBPC LABEL	
R438	061G152M33964L	RST MOFR 3.3 OHM +-5% 2WS	
CN101	088G 35315F XH	D-SUB 15PIN VERTICAL CONN WITH SCREW	
X401	093G 2258B J	NXS24.576AC20F-KAB11	
CN001	033G3802 6H	WAFER 6P RIGHT ANGLE PITCH 2.0	
D001	081G 12 1F GH	LED 3Pin Φ3 黄绿双色 GHZYG603D2-5B	
GND1	009G6005 1	GROUND TERMINAL	
CN602	033G3802 4	WAFER PH-4	
CN804	033G8021 2E F	WAFER	
CN803	033G8021 2E F	WAFER	
CN802	033G8021 2E F	WAFER	
CN801	033G8021 2E F	WAFER	
	040G 45762412B	CBPC LABEL	
IC903	056G 139 3A	IC PC123Y22FZ0F	
NR901	061G 5810T	RST NTCR 8 OHM +-20% 4A 13mm THINKING	
C903	063G107K474 6S	CAP X2 0.47UF K 275VAC	
C822	065G 3J6806ET	CAP CER 68PF J 3KV SL	
C821	065G 3J6806ET	CAP CER 68PF J 3KV SL	
C820	065G 3J6806ET	CAP CER 68PF J 3KV SL	
C819	065G 3J6806ET	CAP CER 68PF J 3KV SL	
C817	065G 6J2096ET	2PF 5% SL 6KV	
C824	065G 6J2206ET	22PF +-5% 6KV SL	
C816	065G 6J2206ET	22PF +-5% 6KV SL	
C902	065G305M1022BP	Y2 1000PF M 250VAC Y5P	
C901	065G305M1022BP	Y2 1000PF M 250VAC Y5P	
C920	065G306M1022BP	1000PF Y1.CAP	
C900	065G306M2222BP	2200PF +-20% 250VAC	
C905	067G 40Z12115K	EC 120uF V 450V 20*40mm	
C812	067G215H102 4K	LOW ESR EC 1000UF 25V EB1E102M	
C916	067G215P1023PV	CAP 105℃ 1000UF M 16V	
C934	067G215P1023PV	CAP 105℃ 1000UF M 16V	
C939	067G215P1024PV	CAP 105℃ 1000UF M 25V	
C915	067G215P4713PV	CAP 105C 470UF M 16V	
C918	067G215S6814KV	CAP 105℃ 680uF M 25V	
C917	067G215S6814KV	CAP 105℃ 680uF M 25V	
L905	073G 253 91 V	CHOKE COIL 3.5uH+-10%	
L904	073G 253 91 V	CHOKE COIL 3.5uH+-10%	
L903	073G 253 91 V	CHOKE COIL 3.5uH+-10%	
PT801	080GL19T 32 DN	X'FMR 785mH TK.2027R.101	
T901	080GL22T 3 N	X'FMR 490uH YUVA-822	
CN901	087G 501 32 DL	AC SOCKET DIP 3PIN+2PIN GROUND	
CN601	088G 30214K DC	PHONE JACK 5PIN +开口向下弹片	
D907	093G 60519	DIODE SR560 5A/60V DO-27 SECOS	
CN902	095G 82014TE01	HARNESS 14P-9P 140MM	
	705GQ757014	Q901 ASS'Y	
	705GQ793054	D906 ASS'Y	
	705GQ793055	D908 ASS'Y	
	PW9941LHD1SMT	POWER BOARD FOR SMT	
HS1	Q90G6295 3	HEAT SINK	
L802	S73G17435VA	Transformer	
L801	S73G17435VA	Transformer	
L901	S73L17440VG	Transformer	
IC601	056G 616 34	IC APA2069JITUL 2.6W*2 PDIP-16	
BD901B	093G 50460911	BRIDGE GBU406 4A/800V	

C423	067G 3051013PB	EC 105℃ 100uF M 16V 5*11mm	
C426	067G 3051013PB	EC 105℃ 100uF M 16V 5*11mm	
C424	067G 3051013PB	EC 105℃ 100uF M 16V 5*11mm	
C427	067G 3051013PB	EC 105℃ 100uF M 16V 5*11mm	
C421	067G 3151014KB	EC 100uF M 25V 6.3*11	
U405	056G 56327A	IC AP1117E18LA SOT223-3L ANACHIP	
U404	056G 563514	IC AZ1117H-3.3TRG1 1A/3.3V SOT223	
U102	056G 662 13	IC AZC099-04S SOT23-6L	
U103	056G 662 13	IC AZC099-04S SOT23-6L	
U401	056G1126 48	IC HX6803-A000LAG LQFP-64	
U406	056G1133 32	IC M24C04-WMN6TP SO8	
U101	056G1133 34	M24C02-WMN6TP	
U402	056G1133 81	SST25LF020A-33-4C-SAE	
Q404	057G 417 6	PMBS3906/PHILIPS-SMT(06)	
Q402	057G 417 6	PMBS3906/PHILIPS-SMT(06)	
Q401	057G 417 6	PMBS3906/PHILIPS-SMT(06)	
Q408	057G 417 12 T	KEC 2N3904S-RTK/PS	
Q412	057G 417518	TRA LMBT3904LT1G 200mA/40V SOT-23 LRC	
Q411	057G 417518	TRA LMBT3904LT1G 200mA/40V SOT-23 LRC	
Q410	057G 417518	TRA LMBT3904LT1G 200mA/40V SOT-23 LRC	
Q406	057G 417518	TRA LMBT3904LT1G 200mA/40V SOT-23 LRC	
Q405	057G 763 1	A03401 SOT23 BY AOS(A1)	
R466	061G0402000	RST CHIP MAX 0R05 1/16W	
R469	061G0402000	RST CHIP MAX 0R05 1/16W	
R476	061G0402000	RST CHIP MAX 0R05 1/16W	
R419	061G0402101	RST CHIPR 100 OHM +-5% 1/16W	
R418	061G0402101	RST CHIPR 100 OHM +-5% 1/16W	
R473	061G0402101	RST CHIPR 100 OHM +-5% 1/16W	
R472	061G0402101	RST CHIPR 100 OHM +-5% 1/16W	
R471	061G0402101	RST CHIPR 100 OHM +-5% 1/16W	
R420	061G0402101	RST CHIPR 100 OHM +-5% 1/16W	
R412	061G0402101	RST CHIPR 100 OHM +-5% 1/16W	
R411	061G0402101	RST CHIPR 100 OHM +-5% 1/16W	
R113	061G0402101	RST CHIPR 100 OHM +-5% 1/16W	
R110	061G0402101	RST CHIPR 100 OHM +-5% 1/16W	
R456	061G0402102	RST CHIPR 1 KOHM +-5% 1/16W	
R455	061G0402102	RST CHIPR 1 KOHM +-5% 1/16W	
R453	061G0402102	RST CHIPR 1 KOHM +-5% 1/16W	
R441	061G0402102	RST CHIPR 1 KOHM +-5% 1/16W	
R118	061G0402102	RST CHIPR 1 KOHM +-5% 1/16W	
R103	061G0402102	RST CHIPR 1 KOHM +-5% 1/16W	
R102	061G0402102	RST CHIPR 1 KOHM +-5% 1/16W	
R461	061G0402103	RST CHIPR 10 KOHM +-5% 1/16W	
R462	061G0402103	RST CHIPR 10 KOHM +-5% 1/16W	
R467	061G0402103	RST CHIPR 10 KOHM +-5% 1/16W	
R475	061G0402103	RST CHIPR 10 KOHM +-5% 1/16W	
R482	061G0402103	RST CHIPR 10 KOHM +-5% 1/16W	
R487	061G0402103	RST CHIPR 10 KOHM +-5% 1/16W	
R488	061G0402103	RST CHIPR 10 KOHM +-5% 1/16W	
R447	061G0402103	RST CHIPR 10 KOHM +-5% 1/16W	
R449	061G0402103	RST CHIPR 10 KOHM +-5% 1/16W	
R460	061G0402103	RST CHIPR 10 KOHM +-5% 1/16W	
R120	061G0402103	RST CHIPR 10 KOHM +-5% 1/16W	
R121	061G0402103	RST CHIPR 10 KOHM +-5% 1/16W	
R404	061G0402103	RST CHIPR 10 KOHM +-5% 1/16W	
R407	061G0402103	RST CHIPR 10 KOHM +-5% 1/16W	

R421	061G0402103	RST CHIPR 10 KOHM +-5% 1/16W	
R433	061G0402103	RST CHIPR 10 KOHM +-5% 1/16W	
R437	061G0402103	RST CHIPR 10 KOHM +-5% 1/16W	
R439	061G0402103	RST CHIPR 10 KOHM +-5% 1/16W	
R457	061G0402103	RST CHIPR 10 KOHM +-5% 1/16W	
R401	061G0402105	RST CHIPR 1MOHM +-5% 1/16W	
R410	061G0402121	RST CHIP 120R 1/16W 5%	
R414	061G0402121	RST CHIP 120R 1/16W 5%	
R402	061G0402162	RST CHIP 1K6 1/16W 5%	
R105	061G0402222	RST CHIPR 2.2 KOHM +-5% 1/16W	
R106	061G0402222	RST CHIPR 2.2 KOHM +-5% 1/16W	
R109	061G0402390 0F	RST CHIP 390R 1/16W 1%	
R115	061G0402391 JF	RST CHIP 390R 1/16W 5% FENGHUA	
R111	061G0402391 JF	RST CHIP 390R 1/16W 5% FENGHUA	
R104	061G0402391 JF	RST CHIP 390R 1/16W 5% FENGHUA	
R427	061G0402392	RST CHIP 3.9K 1/16W 5%	
R428	061G0402392	RST CHIP 3.9K 1/16W 5%	
R448	061G0402472	RST CHIPR 4.7 KOHM +-5% 1/16W	
R477	061G0402472	RST CHIPR 4.7 KOHM +-5% 1/16W	
R440	061G0402472	RST CHIPR 4.7 KOHM +-5% 1/16W	
R435	061G0402472	RST CHIPR 4.7 KOHM +-5% 1/16W	
R416	061G0402472	RST CHIPR 4.7 KOHM +-5% 1/16W	
R415	061G0402472	RST CHIPR 4.7 KOHM +-5% 1/16W	
R125	061G0402472	RST CHIPR 4.7 KOHM +-5% 1/16W	
R119	061G0402472	RST CHIPR 4.7 KOHM +-5% 1/16W	
R481	061G0402473	RST CHIPR 47 KOHM +-5% 1/16W	
R450	061G0402512	RST CHIP 5K1 1/16W 5%	
R436	061G0402513	RST CHIP 51K 1/16W 5%	
R465	061G0402682	RST CHIP 6K8 1/16W 5%	
R107	061G0402750	RST CHIPR 75 OHM +-5% 1/16W	
R112	061G0402750	RST CHIPR 75 OHM +-5% 1/16W	
R116	061G0402750	RST CHIPR 75 OHM +-5% 1/16W	
R434	061G1206331	RST CHIPR 330 OHM +-5% 1/4W	
C122	065G0402100 31	CAP 0402 10PF J 50V NPO	
C121	065G0402100 31	CAP 0402 10PF J 50V NPO	
C120	065G0402100 31	CAP 0402 10PF J 50V NPO	
C405	065G0402103 32	0.01uF +-10% 16V X7R	
C419	065G040210412K A	CAP CHIP 0402 100nF K 16V X7R	
C420	065G040210412K A	CAP CHIP 0402 100nF K 16V X7R	
C422	065G040210412K A	CAP CHIP 0402 100nF K 16V X7R	
C428	065G040210412K A	CAP CHIP 0402 100nF K 16V X7R	
C431	065G040210412K A	CAP CHIP 0402 100nF K 16V X7R	
C432	065G040210412K A	CAP CHIP 0402 100nF K 16V X7R	
C433	065G040210412K A	CAP CHIP 0402 100nF K 16V X7R	
C436	065G040210412K A	CAP CHIP 0402 100nF K 16V X7R	
C437	065G040210412K A	CAP CHIP 0402 100nF K 16V X7R	
C438	065G040210412K A	CAP CHIP 0402 100nF K 16V X7R	
C439	065G040210412K A	CAP CHIP 0402 100nF K 16V X7R	
C450	065G040210412K A	CAP CHIP 0402 100nF K 16V X7R	
C118	065G040210412K A	CAP CHIP 0402 100nF K 16V X7R	
C401	065G040210412K A	CAP CHIP 0402 100nF K 16V X7R	
C403	065G040210412K A	CAP CHIP 0402 100nF K 16V X7R	
C404	065G040210412K A	CAP CHIP 0402 100nF K 16V X7R	
C406	065G040210412K A	CAP CHIP 0402 100nF K 16V X7R	
C407	065G040210412K A	CAP CHIP 0402 100nF K 16V X7R	
C409	065G040210412K A	CAP CHIP 0402 100nF K 16V X7R	

C413	065G040210412K A	CAP CHIP 0402 100nF K 16V X7R	
C414	065G040210412K A	CAP CHIP 0402 100nF K 16V X7R	
C415	065G040210412K A	CAP CHIP 0402 100nF K 16V X7R	
C416	065G040210412K A	CAP CHIP 0402 100nF K 16V X7R	
C417	065G040210412K A	CAP CHIP 0402 100nF K 16V X7R	
C447	065G0402105 A5	CAP 0402 1UF K 10V X5R	
C103	065G0402220 31	CHIP 22PF 50V NPO	
C102	065G0402220 31	CHIP 22PF 50V NPO	
C408	065G0402224 17	CAP CER 0.22UF -20%-80%	
C444	065G0402224 A5	MLCC 0402 CAP 0.22UF K 10V X5R	
C411	065G0402330 31	CHIP CAP 0402 33pF J 50V NPO	
C412	065G0402330 31	CHIP CAP 0402 33pF J 50V NPO	
C110	065G0402473 12	CHIP 0.047uF 16V X7R	
C107	065G0402473 12	CHIP 0.047uF 16V X7R	
C106	065G0402473 12	CHIP 0.047uF 16V X7R	
C101	065G0402473 12	CHIP 0.047uF 16V X7R	
C456	065G0805105 22	CAP CHIP 0805 1uF K 25V X7R	
C455	065G0805106 A7	CHIP 10uF 10V Y5V 0805	
C442	065G0805106 A7	CHIP 10uF 10V Y5V 0805	
C441	065G0805106 A7	CHIP 10uF 10V Y5V 0805	
C402	065G080547515K T	CAP CHIP 0805 4.7UF K 16V X5R	
FB407	071G 56G301 EA	BEAD 300 欧	
FB402	071G 56K121 M	CHIP BEAD	
FB104	071G 59G301	CHIP BEAD 300OHM	
R124	071G 59K190 B	19 OHM BEAD	
R123	071G 59K190 B	19 OHM BEAD	
R122	071G 59K190 B	19 OHM BEAD	
FB406	071G 59K190 B	19 OHM BEAD	
FB405	071G 59K190 B	19 OHM BEAD	
R101	071G 59K800	CHIP BEAD 80 OHM FCM1608K-800	
FB409	071G 59S221 M	CHIP BEAD 0603 220ohm+-25% 2A	
D403	093G 60505	DIO SIG SM BAT54C(PHSE)R	
D105	093G 64 42 P	BAV70 SOT23 BY PAN JIT	
ZD103	093G 39S 34 T	UDZSNP5.6B ROHM	
ZD104	093G 39S 34 T	UDZSNP5.6B ROHM	
D402	093G2004 2	DIODE SR24	
	715G2681 1 4	MAIN BOARD PCB	
R003	061G0603000 1F	RST CHIPR 0 OHM +-1% 1/10W	
R005	061G0603100 1F	RST CHIPR 1 KOHM +-1% 1/10W	
R004	061G1206200 1F	RST CHIPR 2.0 KOHM +-1% 1/4W	
R002	061G1206200 1F	RST CHIPR 2.0 KOHM +-1% 1/4W	
Q901	057G 724 11	STP9NK65ZFP	
	0M1G 930 8120	SCREW	
	J90G0062 4	HEAT SINK	
D906	093G 60245	SP10150 10A 150V ITO-220 BY SECOS	
	0M1G 930 8120	SCREW	
	Q90G6264 4	HEAT SINK	
D908	093G 60526	SCHOTTKY MBRF1060CT ITO-220AB	
	0M1G 930 8120	SCREW	
	Q90G6263 6	HEAT SINK	
IC901	056G 379 98	IC LD7552DPS SOP-8	
IC801	056G 608 10	IC OZ9938GN-B-O-TR SOIC-16	
Q601	057G 417 4	PMBS3904/PHILIPS-SMT(04)	
Q801	057G 417 4	PMBS3904/PHILIPS-SMT(04)	
Q903	057G 417 4	PMBS3904/PHILIPS-SMT(04)	
Q802	057G 759 2	RK7002FD5T116 SOT-23 BY ROHM	

Q803	057G 759 2	RK7002FD5T116 SOT-23 BY ROHM	
Q805	057G 763905	FET FDS8958A SO-8	
Q806	057G 763905	FET FDS8958A SO-8	
R846	061G0603000	RST CHIP MAX 0R05 1/10W	
R849	061G0603000	RST CHIP MAX 0R05 1/10W	
R926	061G0603100 1F	RST CHIPR 1 KOHM +-1% 1/10W	
R942	061G0603100 1F	RST CHIPR 1 KOHM +-1% 1/10W	
R816	061G0603100 2F	RST CHIPR 10K OHM +-1% 1/10W	
R805	061G0603101	RST CHIPR 100 OHM +-5% 1/10W	
R807	061G0603101	RST CHIPR 100 OHM +-5% 1/10W	
R845	061G0603103	RST CHIPR 10 KOHM +-5% 1/10W	
R844	061G0603103	RST CHIPR 10 KOHM +-5% 1/10W	
R843	061G0603103	RST CHIPR 10 KOHM +-5% 1/10W	
R842	061G0603103	RST CHIPR 10 KOHM +-5% 1/10W	
R610	061G0603103	RST CHIPR 10 KOHM +-5% 1/10W	
R609	061G0603103	RST CHIPR 10 KOHM +-5% 1/10W	
R605	061G0603103	RST CHIPR 10 KOHM +-5% 1/10W	
R604	061G0603103	RST CHIPR 10 KOHM +-5% 1/10W	
R603	061G0603103	RST CHIPR 10 KOHM +-5% 1/10W	
R602	061G0603103	RST CHIPR 10 KOHM +-5% 1/10W	
R601	061G0603103	RST CHIPR 10 KOHM +-5% 1/10W	
R819	061G0603104	RST CHIPR 100 KOHM +-5% 1/10W	
R818	061G0603104	RST CHIPR 100 KOHM +-5% 1/10W	
R841	061G0603105	RST CHIPR 1M OHM +-5% 1/10W	
R840	061G0603105	RST CHIPR 1M OHM +-5% 1/10W	
R839	061G0603105	RST CHIPR 1M OHM +-5% 1/10W	
R838	061G0603105	RST CHIPR 1M OHM +-5% 1/10W	
R826	061G0603105	RST CHIPR 1M OHM +-5% 1/10W	
R821	061G0603105	RST CHIPR 1M OHM +-5% 1/10W	
R817	061G0603105	RST CHIPR 1M OHM +-5% 1/10W	
C808	061G0603184	RST CHIPR 180 KOHM +-5% 1/10W	
R820	061G0603203	RST CHIPR 20 KOHM +-5% 1/10W	
R801	061G0603242	RST CHIPR 2.4 KOHM +-5% 1/10W	
R927	061G0603243 1F	RST CHIPR 2.43K OHM +-1% 1/10W	
R930	061G0603243 1F	RST CHIPR 2.43K OHM +-1% 1/10W	
R823	061G0603390 0F	RST CHIPR 390 OHM +-1% 1/10W	
R813	061G0603474	RST CHIPR 470 KOHM +-5% 1/10W	
R824	061G0603510 1F	RST CHIPR 5.1K OHM +-1% 1/10W	
R825	061G0603511	RST CHIPR 510 OHM +-5% 1/10W	
R606	061G0603622	RST CHIPR 6.2 KOHM +-5% 1/10W	
R607	061G0603622	RST CHIPR 6.2 KOHM +-5% 1/10W	
R836	061G0603623	RST CHIPR 62 KOHM +-5% 1/10W	
R837	061G0603822	RST CHIPR 8.2 KOHM +-5% 1/10W	
RJ610	061G0805000	RST CHIP MAX 0R05 1/8W	
R608	061G0805000	RST CHIP MAX 0R05 1/8W	
R806	061G0805101	1ST CHIPR 100 OHM +-5% 1/8W	
R808	061G0805101	1ST CHIPR 100 OHM +-5% 1/8W	
R939	061G0805102	RST CHIPR 1K OHM +-5% 1/8W	
R925	061G0805102	RST CHIPR 1K OHM +-5% 1/8W	
R938	061G0805103	RST CHIPR 10K OHM +-5% 1/8W	
R822	061G0805200 2F	RST CHIPR 20 KOHM +-1% 1/8W	
R802	061G0805220	RST CHIPR 22 OHM +-5% 1/8W	
R924	061G0805331 JT	RST CHIP 330R 1/8W 5% TZAI YUAN	
R943	061G0805471	RST CHIPR 470 OHM +-5% 1/8W	
R803	061G0805512	RST CHIPR 5.1 KOHM +-5% 1/8W	
R804	061G0805512	RST CHIPR 5.1 KOHM +-5% 1/8W	

R829	061G0805682	RST CHIPR 6.8 KOHM +-5% 1/8W	
RJ802	061G1206000	RST CHIP MAX 0R05 1/4W	
J802	061G1206000	RST CHIP MAX 0R05 1/4W	
RJ801	061G1206000	RST CHIP MAX 0R05 1/4W	
RJ901	061G1206000	RST CHIP MAX 0R05 1/4W	
RJ805	061G1206000	RST CHIP MAX 0R05 1/4W	
RJ804	061G1206000	RST CHIP MAX 0R05 1/4W	
FB902	061G12060004JF	RST CHIPR MAX0R05 4A 1/4W FENGHUA	
R910	061G1206100	RST CHIPR 10 OHM +-5% 1/4W	
R962	061G1206101	RST CHIPR 100 OHM +-5% 1/4W	
R961	061G1206101	RST CHIPR 100 OHM +-5% 1/4W	
R951	061G1206101	RST CHIPR 100 OHM +-5% 1/4W	
R950	061G1206101	RST CHIPR 100 OHM +-5% 1/4W	
R949	061G1206101	RST CHIPR 100 OHM +-5% 1/4W	
R935	061G1206101	RST CHIPR 100 OHM +-5% 1/4W	
R920	061G1206101	RST CHIPR 100 OHM +-5% 1/4W	
R919	061G1206101	RST CHIPR 100 OHM +-5% 1/4W	
R918	061G1206101	RST CHIPR 100 OHM +-5% 1/4W	
R901	061G1206105	1M 1206	
R902	061G1206105	1M 1206	
R912	061G1206221	RST CHIPR 220 OHM +-5% 1/4W	
R906	061G1206304	RST CHIPR 300k OHM +-5% 1/4W	
R904	061G1206304	RST CHIPR 300k OHM +-5% 1/4W	
R905	061G1206304	RST CHIPR 300k OHM +-5% 1/4W	
R909	061G1206519	RST CHIPR 5.1 OHM +-5% 1/4W	
C611	065G0603101 31	CER1 0603 NP0 50V 100P PM5 R	
C610	065G0603101 31	CER1 0603 NP0 50V 100P PM5 R	
C932	065G0603102 32	1000PF +-10% 50V X7R	
C805	065G0603103 32	CAP CHIP 0603 0.01UF K 50V X7R	
C613	065G0603104 22	CAP CHIP 0603 0.1UF K 25V X7R	
C612	065G0603104 22	CAP CHIP 0603 0.1UF K 25V X7R	
C807	065G060310522K T	CAP CHIP 0603 1UF K 25V X7R	
C806	065G060310522K T	CAP CHIP 0603 1UF K 25V X7R	
C818	065G0603221 31	CER1 0603 NP0 50V 220P P	
C815	065G0603473 32	CHIP 0.047UF 50V X7R	
C810	065G0603473 32	CHIP 0.047UF 50V X7R	
C602	065G0603474 12	MLCC 0603 0.47UF K 16V X7R	
C601	065G0603474 12	MLCC 0603 0.47UF K 16V X7R	
C606	065G0603474 12	MLCC 0603 0.47UF K 16V X7R	
C603	065G0603474 12	MLCC 0603 0.47UF K 16V X7R	
C928	065G0805102 31	CAP CHIP 0805 1000PF J 50V NPO	
C811	065G0805104 32	CAP CHIP 0805 0.1uF K 50V X7R	
C907	065G0805104 32	CAP CHIP 0805 0.1uF K 50V X7R	
C924	065G0805104 32	CAP CHIP 0805 0.1uF K 50V X7R	
C930	065G0805104 32	CAP CHIP 0805 0.1uF K 50V X7R	
C931	065G0805104 32	CAP CHIP 0805 0.1uF K 50V X7R	
C940	065G0805104 32	CAP CHIP 0805 0.1uF K 50V X7R	
C608	065G080510522K T	CAP CHIP 0805 1UF K 25V X7R	
C609	065G080510522K T	CAP CHIP 0805 1UF K 25V X7R	
C804	065G080522512K T	CAP CHIP 0805 2.2UF K 16V X7R	
C813	065G080533332K F	CAP CHIP 0805 33NF K 50V X7R	
C814	065G080539131G	CHIP 0805 390PF G 50V NPO	
C909	065G0805471 31	CHIP 470PF 50V NPO	
C801	065G0805473 32	CHIP 0.047UF 50V X7R	
C802	065G0805473 32	CHIP 0.047UF 50V X7R	
C941	065G0805473 32	CHIP 0.047UF 50V X7R	

C809	065G080556131G	MLCC 0805 560PF G 50V NPO	
C935	065G1206102 72	CAP CHIP 1206 1000PF K 500V X7R	
C929	065G1206102 72	CAP CHIP 1206 1000PF K 500V X7R	
C912	065G1206102 72	CAP CHIP 1206 1000PF K 500V X7R	
D808	093G 64 42 L	DIODE LBAV70LT1G SOT-23 LRC	
D807	093G 64 42 L	DIODE LBAV70LT1G SOT-23 LRC	
D806	093G 64 42 L	DIODE LBAV70LT1G SOT-23 LRC	
D903	093G 6432S	1N4148W	
D805	093G 6432S	1N4148W	
D804	093G 6432S	1N4148W	
D803	093G 6432S	1N4148W	
D802	093G 6432S	1N4148W	
D801	093G 6432S	1N4148W	
D809	093G 6433S	DIODE BAV99 SEMTECH	
ZD902	093G 39GA31 T	ZENER DIODE RLZ18B SEMTECH	
ZD921	093G 39S 20 T	RLZ22B LLDS	
ZD922	093G 39S 24 T	RLZ 5.6B LLDS	
ZD803	093G 39S 24 T	RLZ 5.6B LLDS	
ZD802	093G 39S 24 T	RLZ 5.6B LLDS	
ZD801	093G 39S 24 T	RLZ 5.6B LLDS	
	PW9941LHD1AI	POWER BOARD FOR AI	
SW004	077G 603 AI HJ	TACT SWITCH 2PIN	
SW005	077G 603 AI HJ	TACT SWITCH 2PIN	
SW001	077G 603 AI HJ	TACT SWITCH 2PIN	
SW002	077G 603 AI HJ	TACT SWITCH 2PIN	
SW003	077G 603 AI HJ	TACT SWITCH 2PIN	
	715G2835 2	KEY BOARD PCB	
CN901	006G 31500	EYELET	
T901	006G 31502	1.5MM RIVET	
IC904	056G 158 10 T	IC AS431AZTR-E1 TO-92	
R903	061G152M10452T	RST MOFR 100KOHM +-5% 2WS	
R946	061G152M15152T	RST MOFR 150 OHM +-5% 2WS	
R914	061G152M43852T	RST MOF 0R43 5% 2W	
R828	061G212Y62552T SY	RST MGFR 6.2MOHM +-5% 1/2W FUTABA	
C906	065G 2K152 2T6921	CAP CER 1500pF K 2KV Y5P	
C604	067G215Y1014KT	EC CAP.105 度	
C908	067G215Y2207KT	CAP 105℃ 22UF M 50V KINGNICHI	
FB602	071G 55 9 T	FERRITE BEAD	
FB904	071G 55 9 T	FERRITE BEAD	
FB901	071G 55 29	FERRITE BEAD	
FB903	071G 55 29	FERRITE BEAD	
L906	073G 54229 5T	PEAKING COIL 2.2uH 5%	
F901	084G 56 4 B	FUSE 4A 250V	
F902	084G 56 4 B	FUSE 4A 250V	
F903	084G 56 4 B	FUSE 4A 250V	
D901	093G 6038T52T	FR103	
D900	093G1100 1152T	DIODE PR1007R 1A/1000V DO-41	
J836	095G 90 23	JUMPER WIRE	
J835	095G 90 23	JUMPER WIRE	
J834	095G 90 23	JUMPER WIRE	
J833	095G 90 23	JUMPER WIRE	
J832	095G 90 23	JUMPER WIRE	
J831	095G 90 23	JUMPER WIRE	
J830	095G 90 23	JUMPER WIRE	
J829	095G 90 23	JUMPER WIRE	
J826	095G 90 23	JUMPER WIRE	

J825	095G 90 23	JUMPER WIRE	
J824	095G 90 23	JUMPER WIRE	
J823	095G 90 23	JUMPER WIRE	
J837	095G 90 23	JUMPER WIRE	
J912	095G 90 23	JUMPER WIRE	
J910	095G 90 23	JUMPER WIRE	
J909	095G 90 23	JUMPER WIRE	
J908	095G 90 23	JUMPER WIRE	
J907	095G 90 23	JUMPER WIRE	
J906	095G 90 23	JUMPER WIRE	
J905	095G 90 23	JUMPER WIRE	
J904	095G 90 23	JUMPER WIRE	
J903	095G 90 23	JUMPER WIRE	
J902	095G 90 23	JUMPER WIRE	
J901	095G 90 23	JUMPER WIRE	
J838	095G 90 23	JUMPER WIRE	
J821	095G 90 23	JUMPER WIRE	
J801	095G 90 23	JUMPER WIRE	
J804	095G 90 23	JUMPER WIRE	
J808	095G 90 23	JUMPER WIRE	
J810	095G 90 23	JUMPER WIRE	
J811	095G 90 23	JUMPER WIRE	
J814	095G 90 23	JUMPER WIRE	
J815	095G 90 23	JUMPER WIRE	
J816	095G 90 23	JUMPER WIRE	
J817	095G 90 23	JUMPER WIRE	
J818	095G 90 23	JUMPER WIRE	
	715G2824 2	POWER BOARD PCB	