# Dimensional Data for 26X72R

**Indoor unit : XH2672R**

**Indoor unit : 4-Way Air Discharge Semi-concealed Type**
**26 Type**

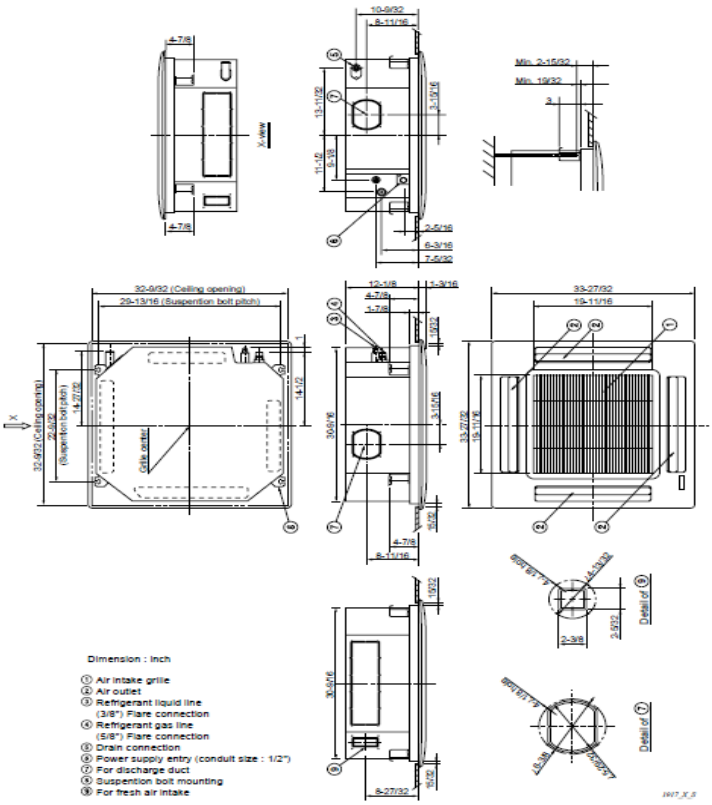


**(B) Outdoor Unit: CH2672R, C2672R**
**CH3072R, C3072R**
**CH3672R, C3672R**

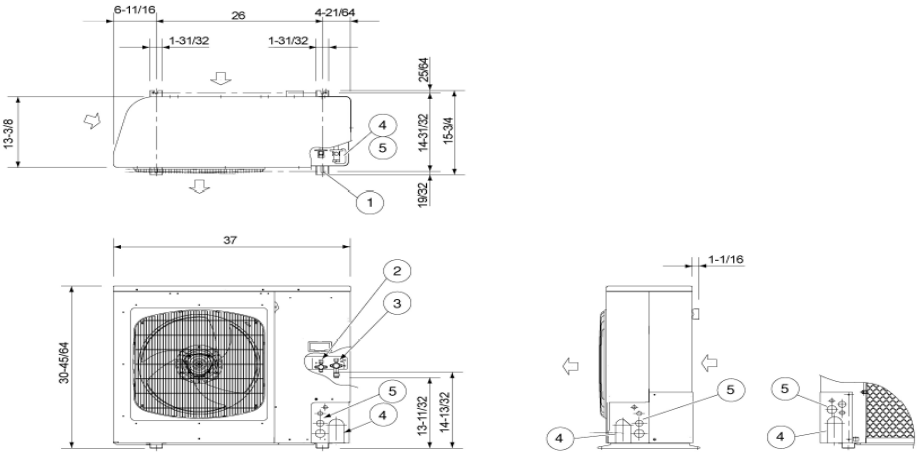

Dimension: inch

| | |
|---|---|
| ① | Hole for anchor bolt (4–R6.5) / Anchor bolt: M10 |
| ② | Refrigerant tube joint (liquid line tube) • Flare connection 3/8 in (9.52 mm) |
| ③ | Refrigerant tube joint (gas line tube) • Flare connection 5/8 in (15.88 mm) |
| ④ | Refrigerant tubing inlet (knock-out hole) |
| ⑤ | Power supply inlet (knock-out hole ϕ38, ϕ29, ϕ19, ϕ16 mm) |