INSTALLER/CONSUMER SAFETY INFORMATION

Read and save these instructions.

This book contains your installation instructions and should be kept in a safe place. For you to realize all the advantages and use of the reliable service that has been engineered into your fireplace, you must carefully follow all of the instructions contained in this book regarding installation and operation of the fireplace.

These instructions should be read carefully in their entirety before beginning installation of the fireplace.

It is suggested that you wear work gloves and safety glasses to protect your hands and eyes when installing your fireplace. NOTE: Authorities having jurisdiction (i.e. building inspectors, fire marshals, etc.) should be consulted before installation to determine the need to obtain a permit.

When installing the Blower Kit, it is necessary to bring the power source to the fireplace before walls are enclosed. Refer to Blower Kit instructions.

These fireboxes are approved as universal fireboxes and can be paired with any ANSI Z21.11.2 approved vent-free log set. The vent-free log manufacturer's instructions - including their required dimensional clearances for firebox size, - must be followed.

Refer to the manual that is packed with the log set for operating instructions.

CFM Specialty Home Products Unvented Gas Logs VL24MN, VL24MP, VL24RN, VL24RP, VFL34MN, VFL34MP, VFL34RN, VFL34RP may be used with this firebox. (Refer to Page 4)

MAJESTIC™ fireplaces

Vent-Free Gas Fireboxes
Model: UV36

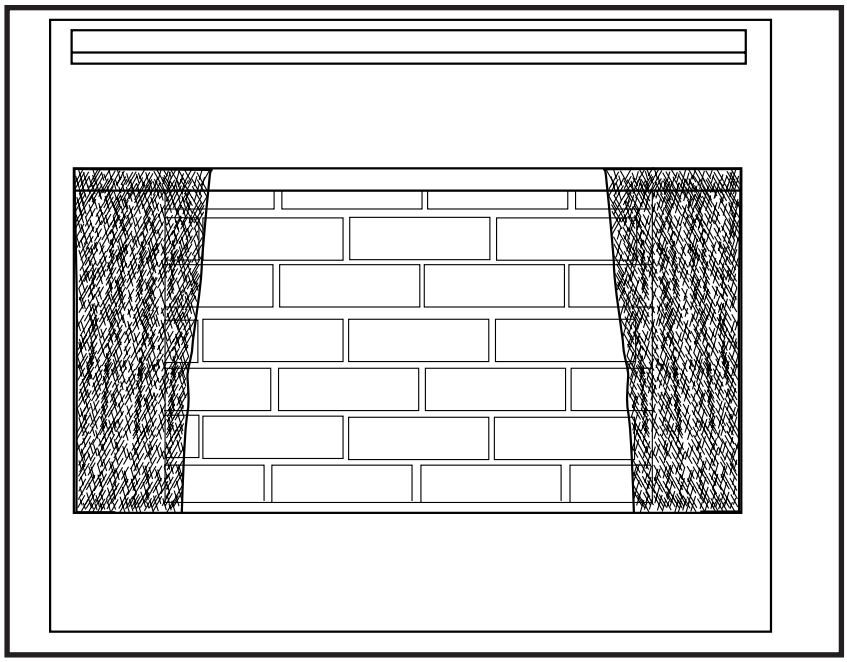

Homeowner's Installation and Operating Instructions

CFM Specialty Home Products

410 Admiral Blvd. • Mississauga, Ontario, Canada L5T 2N6 • 905-670-7777
www.majesticproducts.com • www.vermontcastings.com

INSTALLER: DO NOT DISCARD THIS MANUAL - Leave in fireplace for homeowner.

20007446 6/05 Rev. 4

Table of Contents

This book contains your operating instructions and should be kept in a safe place. For you to realize all the advantages and use of the reliable service that has been engineered into your fireplace, you must carefully follow all of the instructions contained in this book regarding installation and operation of the fireplace.

These instructions should be read carefully in their entirety before beginning installation of the fireplace.

It is suggested that you wear work gloves and safety glasses to protect your hands and eyes when installing your fireplace.

NOTE: Authorities having jurisdiction (i.e. building inspectors, fire marshals, etc.) should be consulted before installation to determine the need to obtain a permit.

FAILURE TO FOLLOW THESE INSTRUCTIONS WILL VOID YOUR WARRANTY AND MAY PRESENT A FIRE HAZARD.

Important Information 3
Fireplace Dimensions 4
Installation Instructions
- Choosing the Location of Your Fireplace 5
- Gas Line 5
- Drafts 5
- Framing clearances 5
- Installing the Firebox 6
- Finishing the Fireplace 7
- Install Optional Outside Air Kit 8

Replacement Parts 10
- Servicing 10

Accessories 10
Warranty 11

UV36 **Certified To**
ANSI Z 21.91.2001 **Ventless Fireboxes**
for use with **any ANSI Z21.11.2** **Unvented Room Heaters**

Units:
UV36 GF1VU2

Important Information

INSTALLER: Please leave these instructions with the owner.
OWNER: Please retain these instructions for future reference.
IMPORTANT: READ THESE INSTRUCTIONS CAREFULLY BEFORE OPERATING.

WARNING: Any change to this heater or its controls can be dangerous.

This heater shall not be installed in a confined space or unusually tight construction unless provisions are provided fro adequate combustion and ventilation air.

NOTES

- **Due to high temperatures, the appliance should be located out of traffic and away from furniture and draperies.**
- Installation and repair must be done by a qualified service person or gas appliance installer.
- The appliance must be inspected before use and at least annually by a professional service person. More frequent cleaning may be required due to excessive lint from carpeting, bedding material, dust and pet hair, etc. It is important that the control compartment, burners and circulating air passageways of the appliance be kept clean. After servicing, always check for leaks.
- **DO NOT place clothing or other flammable material on or near the appliance.**
- The installation must conform with local codes or, in the absence of local codes, with the NATIONAL FUEL GAS CODE, ANSI Z223/NFPA 54, latest edition.
- Any safety screen or guard removed for servicing an appliance must be replaced prior to operating the heater.
- **DO NOT** use this heater in recreational vehicles, bedrooms or bathrooms.
- **If this is the ONLY gas appliance, we recommend a minimum 200 pound cylinder with a fill gauge. Use of a 100 pound cylinder is not recommended. Other household gas appliances may require the tank size to be larger. Do not operate the vent-free heater if the fuel level in the propane tank is below 1/4 full.**
- **DO NOT** use this heater if any part of it has been under water. Immediately call a qualified technician to inspect the appliance and replace any part of the control system and any gas control which has been under water.
- **Check local, state or city codes to determine if unvented heaters are permitted.**
- This appliance may be installed in an after-market* manufactured “mobile” home where not prohibited by state or local codes.

*After-market: Completion of sale, not for purpose of re-sale from the manufacturer.

Children and adults should be alerted to the hazard of high surface temperature and should stay away to avoid burns or clothing ignition.

To avoid irreparable damage to the appliance or personal injury; matches, paper, garbage or any other material must not be placed or thrown on top of the logs or into the flames.

To avoid personal injury, do not touch hot surfaces when the appliance is operating.

Close supervision is necessary when the appliance is being operated near children.

This appliance is intended to be used only for supplemental heat. **Do not use it routinely as a primary heat source.** Continuous operation could produce excessive humidity depending on construction characteristics and outdoor temperatures (below 20°F). Over time, this could cause condensation to form and damage wall structures and exterior paint.

WARNING: Do not install glass doors on this fireplace.

WARNING: If the area in which the heater may be operated is smaller than that defined as an unconfined space or if the building is of unusually tight construction, provide adequate combustion and ventilation air by one of the methods described in the National Fuel Gas code, ANSI Z223.1/NFPA 54, section 5.3 or applicable local codes.

WARNING: Do not allow fans to blow directly into the fireplace. Avoid any drafts that alter burner flame patterns.

WARNING: Do not use a blower insert, heat exchanger insert or other accessory not approved for use with this heater.

WARNING: During manufacturing, fabricating and shipping, various components of this appliance are treated with certain oils, films or bonding agents. These chemicals are not harmful but may produce annoying smoke and smells as they are burned off during the initial operation of the appliance, possibly causing headaches and eye/lung irritation. This is a normal and temporary occurrence.

The National Fuel Gas Code, ANSI Z223.1/NFPA 54 defines a confined space as a space whose volume is less than 50 cubic feet per 1,000 Btu per hour (4.8m^3 per kw) of the aggregate input rating of all appliances installed in that space and an unconfined space as a space whose volume is not less than 50 cubic feet per 1,000 Btu per hour (4.8 m^3 per kw) of the aggregate input rating of all appliances installed in that space. Rooms communicating directly with the space in which the appliances are installed, through openings not furnished with doors, are considered a part of the unconfined space.

Any ANSI approved vent free log set with a maximum of 39,000 Btu/h or less that will fit into the firebox may be used. (Fig. 1a)

The following CFM Specialty Home Products vent free gas logs sets may be used:

VL24MN, VL24MP, VL24RN, VL24RP, VFL34MN, VFL34MP, VFL34RN, VFL34RP.

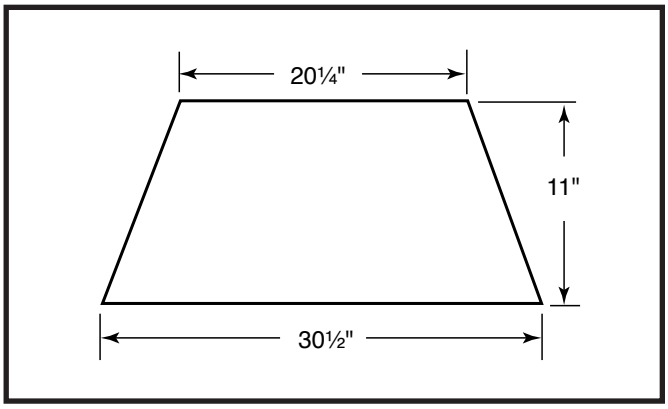

Fig. 1a Firebox dimensions.

Fireplace Dimensions

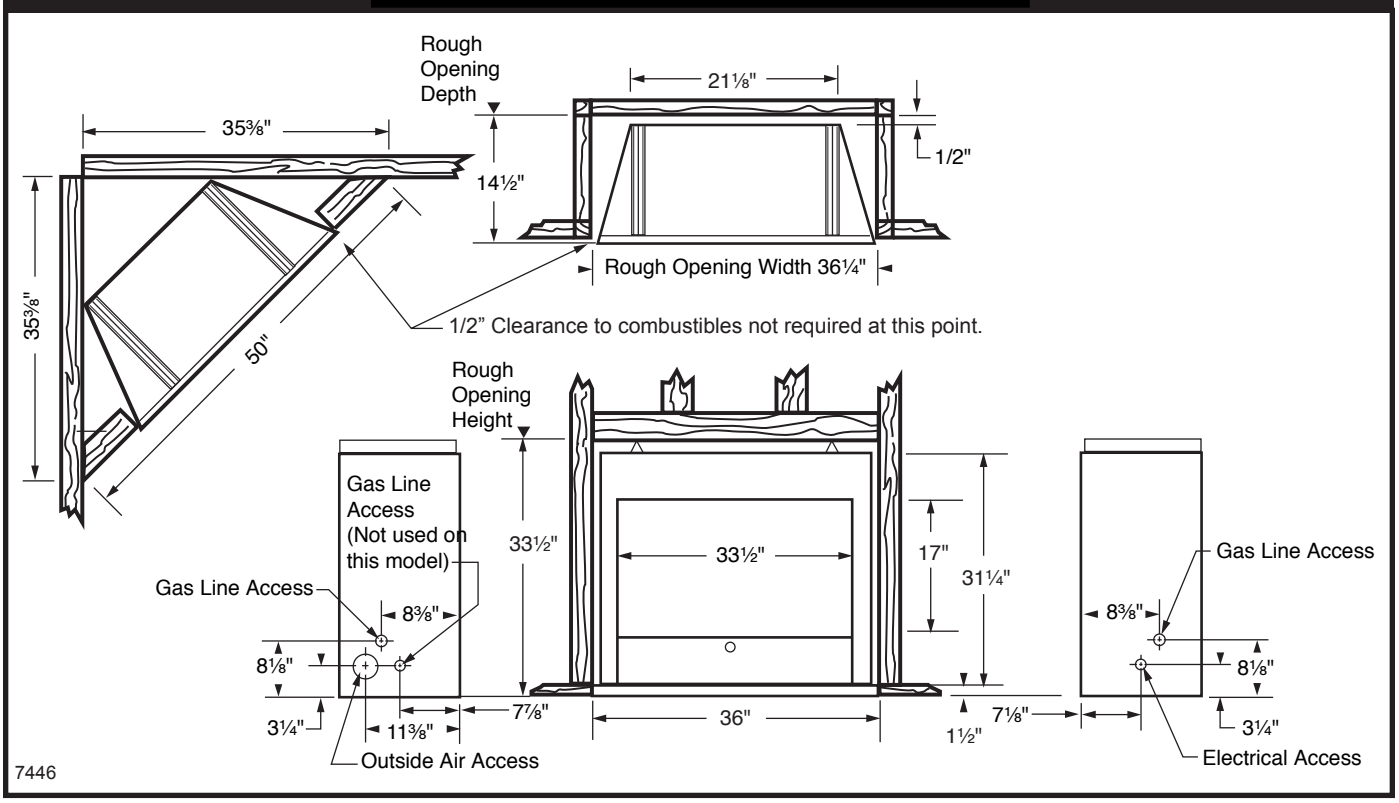

Fig. 1b UV36 specifications and framing.

Installation Instructions

Choosing the Location for Your Fireplace

Figure 2 shows some of the many ways your fireplace may be installed. Consider the traffic pattern in your room and the location of doors and windows. Moving air from ceiling fans, open doors and hot air grilles may cause the flames to soot. If a disturbance is found that affects the flames, it must be eliminated by turning off the ceiling fan, closing the door or closing/moving the hot air register. A corner location may be best where space is limited.

Your fireplace weighs no more than some of your fine furniture. If the fireplace is located near a load bearing wall, additional supports to the foundation will not be necessary. HEAVY FACINGS SUCH AS BRICK, STONE, ETC., MAY REQUIRE ADDITIONAL FOUNDATION SUPPORT.

ALTHOUGH THIS UNIT MAY BE INSTALLED ON COMBUSTIBLE SURFACES, IT MUST NOT BE INSTALLED ON CARPET OR VINYL.

The clearances to sidewalls and ceiling that are shown in Figure 3 must be considered when choosing the location for the fireplace.

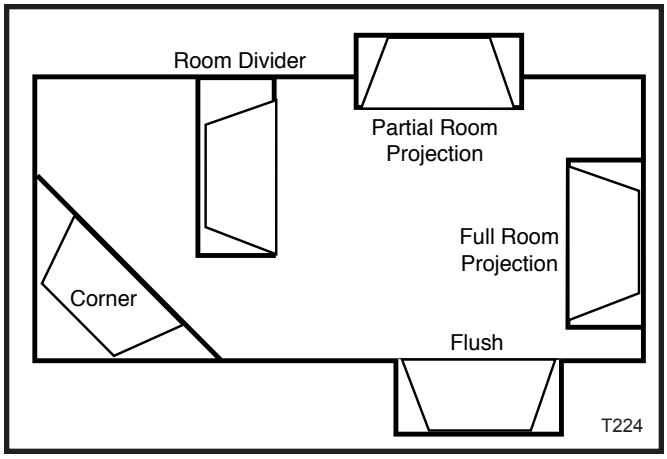

Fig. 2 Locating the fireplace.

Gas Line

The gas line must be installed by a licensed gas line installer before framing in the fireplace.

Drafts

Do not locate the fireplace in high traffic areas or areas exposed to high drafts and winds. Locate the fireplace away from furniture and draperies.

Framing Clearances

The fireplace may be placed directly on a combustible floor, against a combustible wall at marked clearances or on a raised wooden platform.

If the fireplace is to be installed on a raised wooden platform, the platform must be a continuous level surface.

The fireplace must be secured in place so it cannot shift positions. The nailing flanges on the sides of the firebox make securing it to the framing easy. They were designed to allow the installation of 1/2” wallboard or plywood flush with the face of the fireplace.

Only the header (Fig. 1) may rest on the standoffs on top of the firebox.

When the fireplace is installed over carpeting, vinyl tile or any combustible material other than wood flooring, it must be installed on a metal or wood panel extending its full width and depth. Alternatively - the carpeting, vinyl tile, etc., may be removed from beneath the fireplace before installing.

COMBUSTIBLE MATERIALS MUST NOT BE INSTALLED OVER OR TOUCH THE BLACK FRONT SURFACE OF THE FIREPLACE.

Clearances

To ensure a safe installation, the following instructions must be carefully observed.

1. **Right and Left Sidewall Clearances:** Clearances from the side of the fireplace opening to any combustible wall should not be less than 2”.
2. **Ceiling Clearances:** The ceiling height should not be less than 36” from the top of the fireplace opening.
3. **Mantel and Wall Clearances:**
   A. Noncombustible materials must be used for all wall coverings below the top standoffs of the fireplace. (Fig. 3)
   B. A combustible mantel may project 1” from the wall 12” above the fireplace opening.
   C. A combustible mantel must fall within the profile that is shown in Figure 3.
4. **Floor Clearances:** No clearance is required if the appliance is installed per these instructions.

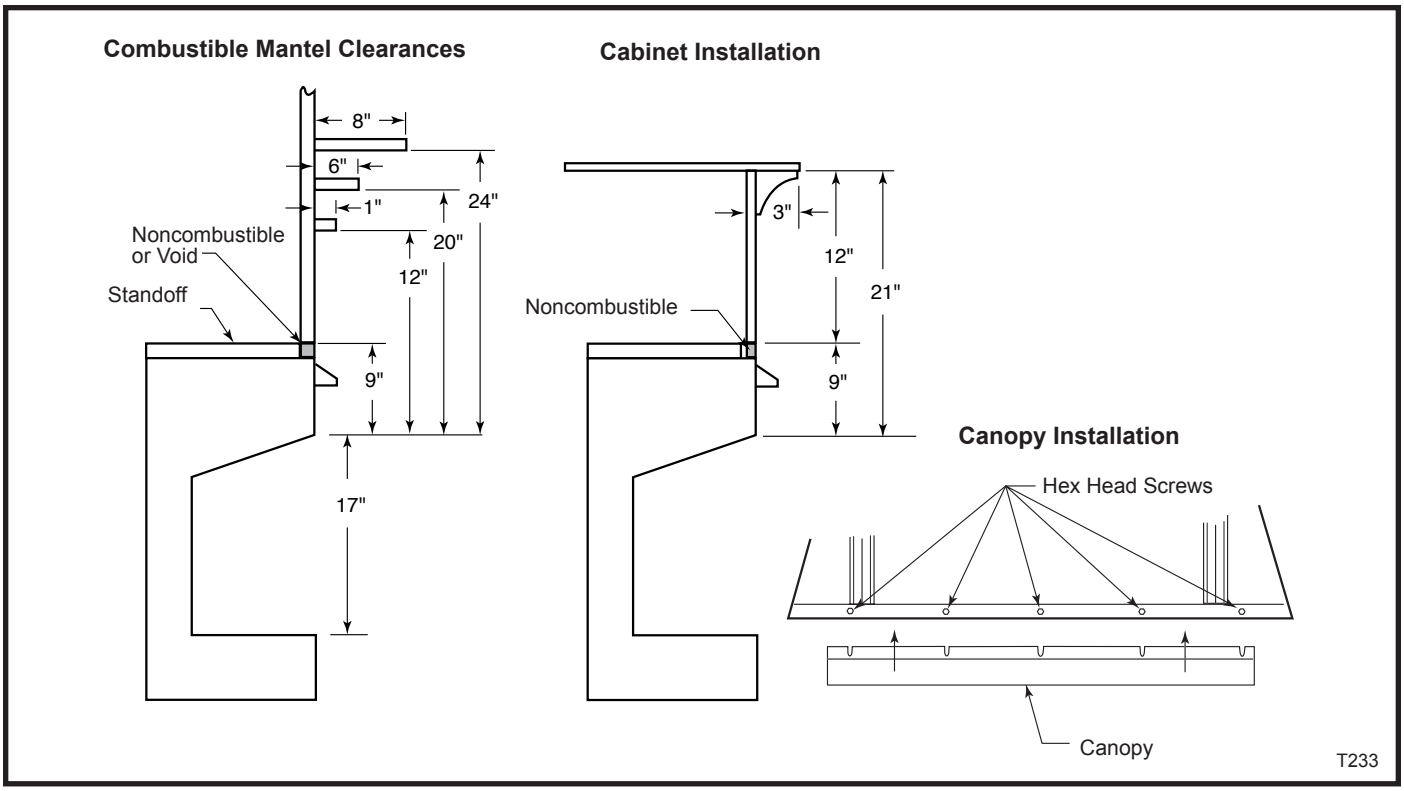

Fig. 3 Combustible mantel clearances.

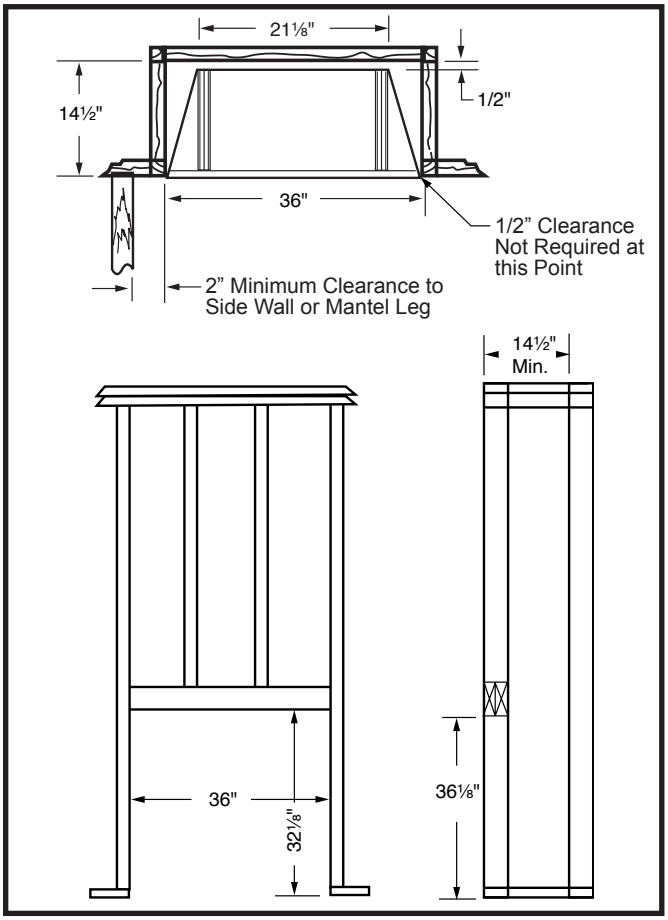

Fig. 4 Framing dimensions.

Installing the Firebox

This list of specific instructions will help you make certain that every installation operation is done correctly. Complete the installation steps in the sequence shown.

LOCAL BUILDING CODES SHOULD BE CONSULTED IN ALL CASES AS TO THE PARTICULAR REQUIREMENTS CONCERNING THE INSTALLATION OF FACTORY BUILT VENT FREE FIREPLACES.

Select the location for the fireplace by taking into consideration the factors previously outlined in the Choosing the Location section of this manual.

Step 1: Framing the Firebox

The entire fireplace can be elevated above the floor to achieve a raised hearth effect. This can be done by adding a small platform to achieve the desired height. This platform must be a continuous surface extending the full width and depth of the fireplace.

STOP! INSTALL CANOPY AT THIS TIME BY LOOSENING THE SCREWS LOCATED AT THE TOP FRONT OF THE FIREPLACE. NEXT, SLIDE THE SLOTTED FLANGE OF THE CANOPY UNDER THE LOOSENED SCREWS, THEN RETIGHTEN THE SCREWS TO SECURE THE CANOPY. (Fig. 3)

Step 2: Install the Firebox

Install the firebox into the framed opening by setting it directly in front of the opening and sliding it into the proper position.

Step 3: Level the Firebox

Check the level of the firebox on the top edge of the fireplace face. Shim if necessary.

Step 4: Secure the Firebox

Four (4) nailing flanges are supplied with the fireplace (found on the fireplace hearth). To level the box and secure it firmly in place, remove the nailing flange from the hearth and install at the sides of the fireplace as shown in Figure 5.

NOTE: The nailing flanges have two (2) sets of holes to allow for adjustment for 1/2" or 5/8" offset of the face of the unit. When installing the nailing flanges, choose the set of holes on the nailing flange that fit with your application.

NOTE: Refer to installation instructions for vent free gas logs for gas connection, sizing, testing and all **safety** information.

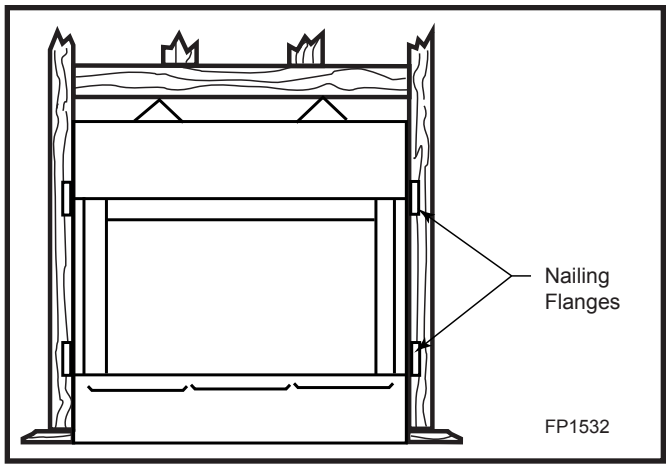

Fig. 5 Secure firebox.

Finishing the Fireplace

There are a wide variety of finishing materials available for your fireplace from formal wall treatments with marble and mantels to rustic wood paneling, stone or brick.

IT IS IMPORTANT THAT THE BLACK FACE OF THE FIREPLACE NOT BE COVERED WITH ANY TYPE OF COMBUSTIBLE MATERIAL.

Noncombustible facing materials such as marble, brick or ceramic tile may overlap the black face of the fireplace up to the opening on either side of the fireplace. Seal all joints between the black fireplace face and the wall covering with a heat-resistant material such as rock wool insulation or mortar. Be sure to use high temperature adhesive or mortar when anchoring brick, stone or tile to the face of the fireplace. Check to see whether man-made brick and stone are made of noncombustible materials before using them on the face of the fireplace. Some of these products contain combustible materials. Combustible wall coverings such as paneling or wallboard may not overlap the black face of the fireplace. The space between the wall covering and the fireplace should be sealed with a heat-resistant material such as rock wool insulation or mortar.

NOTE: An "L" shaped steel lintel must be installed across the top of the firebox opening where facing materials such as brick or stone are used on the face of the firebox. It acts as a support/firestop. It should be attached to the face of the fireplace with screws and sealed to the fireplace with a heat-resistant sealer. Refer to Figure 6 for finishing options.

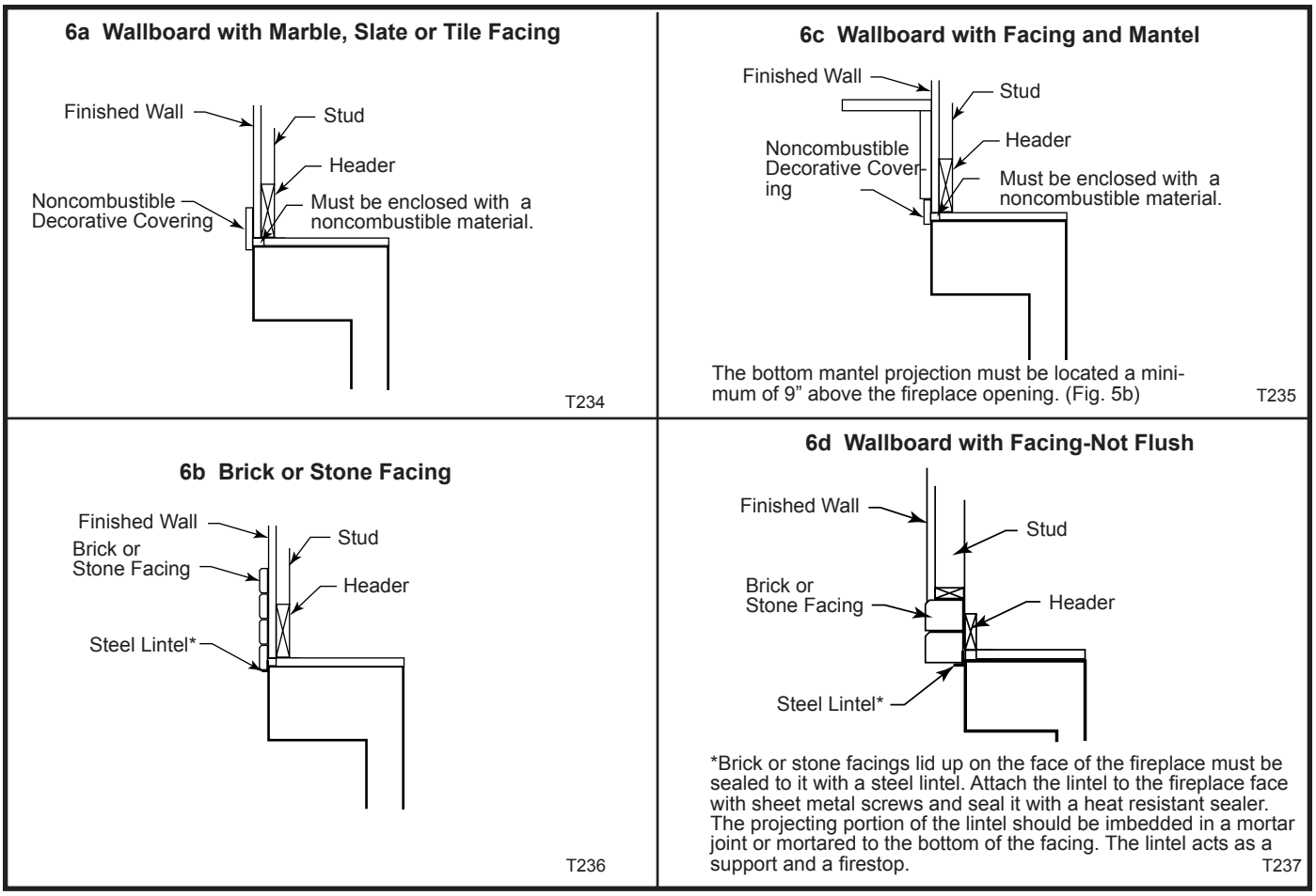

Fig. 5 Finishing options.

Install Optional Outside Air Kit

The AKU3 Outside Air Kit can be installed to bring combustion air to the heated room air. The air that is drawn into the heated room air from outside the home or unheated area helps relieve the pressure in the home. The duct termination should be located so it is exposed to an out-of-doors opening at least 100 square inches. If the duct termination must be located in a crawl space or basement, be sure the termination area has 100 square inches of ventilation opening to outside air.

The duct termination must be located so it does not compete for air flow with exhaust fans, gas vent hoods or other air consuming devices or appliances. It must not be obstructed by rafters, insulation materials or other obstructions. The less restrictive the air supply, the better the outside air kits will perform.

It is good practice to protect your hands and eyes during installation by wearing work gloves and safety glasses.

CAUTION: Do not install termination into a garage or other area that could contain flammable liquids or fumes, or into an attic space.

Installation Instructions

Determine the location of the fireplace as described in the fireplace installation manual. Then plan location of the duct termination and the route of the duct run between the fireplace and the duct termination.

Duct run must be limited to a maximum distance of 40' (12.2m) from the fireplace pipe collar to duct termination. This will provide the least restriction to air flow. No more than four (4) 90° elbows can be used. Duct run may be horizontal, vertical, inclined or any combination of these. (Fig. 7) You are now ready to install the Outside Air Kit.

1. Remove the screws retaining the outside air coverplate, if provided. (Located on the left side of front open units, on backside of multisided units.) Discard coverplate. (Fig. 8)
2. Secure the inlet collar assembly to the outer casing with four screws (not provided). (Fig. 9)
3. Slide the duct over the collar and attach the duct to the collar using the plastic tie straps or three (3) screws (screws not provided). Continue attaching the ducting together using three (3) screws at each joint until you have installed sufficient duct to arrive at your duct termination locations.

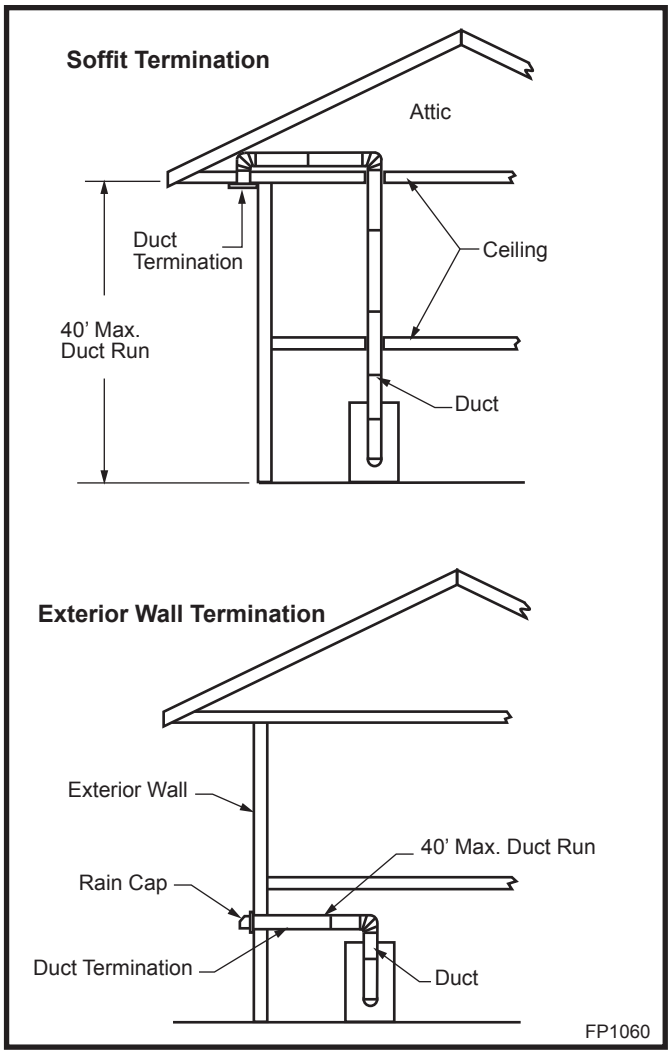

Fig. 7 Typical outside air installations.

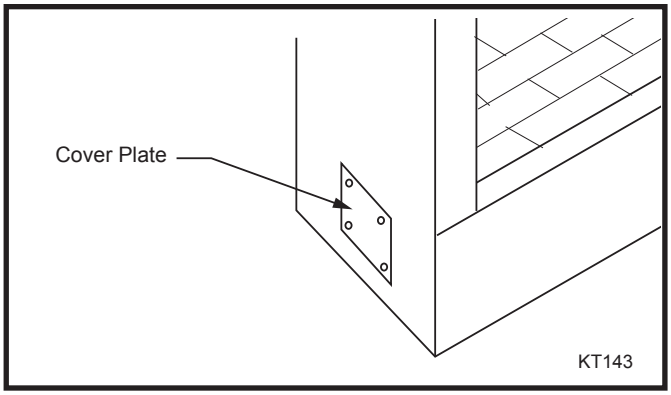

Fig. 8 Remove outside air cover plate and discard, retain screws.

4. At the termination end, install the duct termination. This should be installed from the outside of the home. Cut a hole in the desired location approximately 4½" (114mm) in diameter, caulk around the hole, and slide the termination through the opening from outside the home. The termination/rain cap should be caulked around its perimeter to assure a tight seal. The rain cap opening should be positioned downward. (Fig. 10)

The Outside Air Kit is now installed and ready for use.

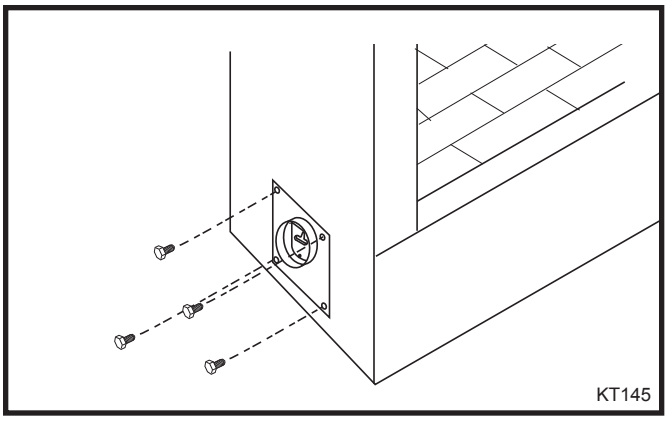

Fig. 9 Secure the inlet collar assembly.

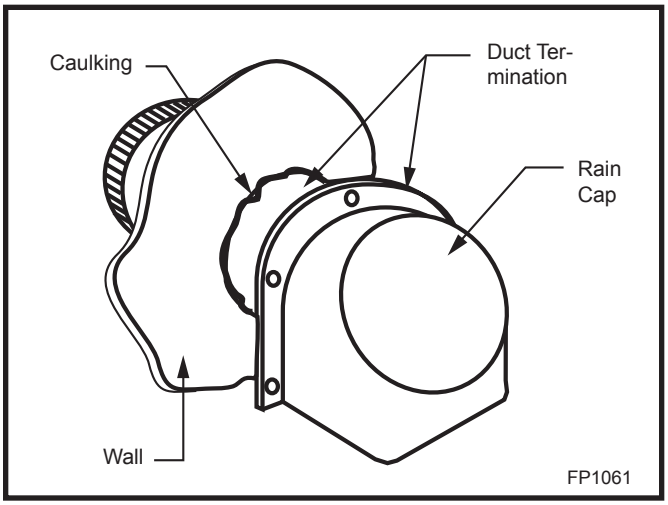

Fig. 10 Caulk and install duct termination/rain cap in place.

Operating Precautions and Instructions

Operation is automatic. A slight negative pressure inside the house will open the barometric flapper valve.

Periodically inspect the duct termination for any blockage. Correct if necessary.

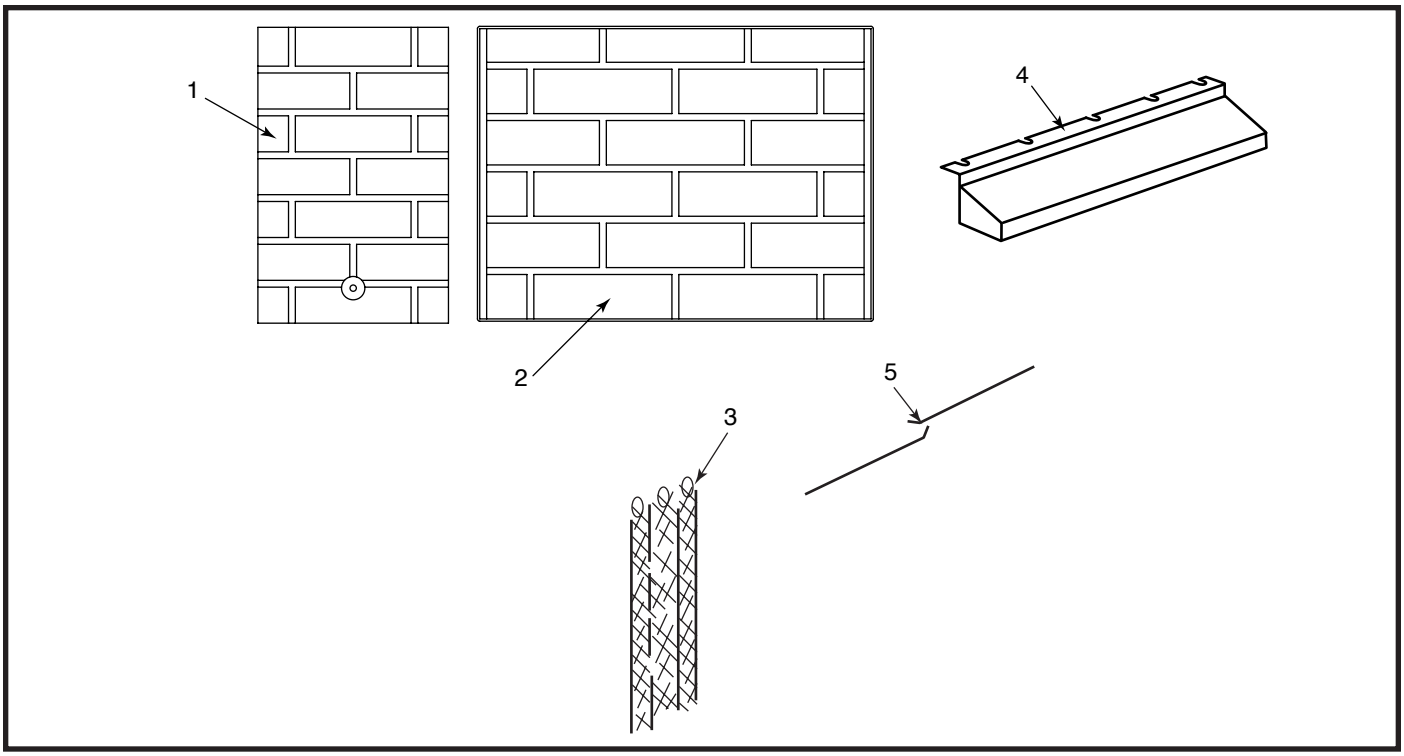

CFM Specialty Home Products reserves the right to make changes in design, materials, specifications, prices and discontinue colors and products at any time, without notice.

UV36 Vent-Free Firebox

Ref.	Description	UV36
1.	Refractory Side Brick (2 per fireplace)	73501
2.	Refractory Back Brick	74554
3.	Screen Panel Assy (2 per fireplace)	70317
4.	Canopy	71653
5.	Rod, Screen (2 per fireplace)	73652

Contact CFM Specialty Home Products for questions concerning prices and policies covering replacement parts. Parts may be ordered through your Majestic Fireplaces distributor or dealer.

You will need the correct name, part number and model number of the appliance when ordering replacement parts.

Should you need additional information beyond what your dealer can furnish, contact:

CFM Specialty Home Products
410 Admiral Blvd.
Mississauga, Ontario
Canada L5T 2N6

Servicing

Repair and replacement work should only be done by a qualified service person. Failure to have anual cleaning and servicing performed will void the warranty.

Always shut off the gas supply and make sure the appliance is cool before beginning any service operation.

Always check for gas leaks after servicing.

Accessories

Outside Air Kit	AKU3

LIMITED LIFETIME WARRANTY

PRODUCT COVERED BY THIS WARRANTY

All Vermont Castings gas stoves, gas inserts, and gas fireplaces, and all Majestic or Northern Flame brand gas fireplaces equipped with an Insta-Flame Ceramic Burner, or standard steel tube burner.

BASIC WARRANTY

CFM Specialty Home Products (hereinafter referred to collectively as the Company) warrants that your new Vermont Castings or Majestic Gas Fireplace/Stove is free from manufacturing and material defects for a period of one year from the date of purchase, subject to the following conditions and limitations.

EXTENDED LIFETIME WARRANTY

The heat exchanger, where applicable, and combustion chamber of every Vermont Castings *or* Majestic gas product is warranted for life against through wall perforation. All appliances equipped with an Insta-Flame Ceramic Burner have limited lifetime coverage on the ceramic burner plaque. Warrantees are made to the original owner subject to proof of purchase and the conditions and limitations listed on this Warranty Document

COMPONENT WARRANTY

CAST IRON: All external and internal cast iron parts are warranted for a period of three years.

Note: On porcelain enamel finished external parts and accessories The Company offers no Warranty on chipping of enamel surfaces. Inspect all product prior to accepting it for any damage to the enamel.

The salt air environment of coastal areas or a high humidity environment can be corrosive to the porcelain enamel finish. These conditions can cause rusting of the cast iron beneath the porcelain enamel finish, which will cause the finish to flake off.

Dye lot variations with replacement parts and/or accessories can occur and are not covered by warranty.

GLASS DOORS: Glass doors are covered for a period of one year. Glass doors are not warranted for breakage due to misuse or accident. Glass doors are not covered for discoloration or burned in stains due to environmental issues, or improper cleaning and maintenance.

BRASS PLATED PARTS AND ACCESSORIES: Brass parts should be cleaned with Lemon oil only. Brass cleaners cannot be used. Mortar mix and masonry cleaners may corrode the brass finish. The Company will not be responsible for, nor will it warrant any brass parts which are damaged by external chemicals or down draft conditions.

GAS VALVES: Gas valves are covered for a period of one year

ELECTRONIC AND MECHANICAL COMPONENTS: Electronic and mechanical components of the burner assembly are covered for one year. All steel tube burners are warranted for one year.

ACCESSORIES: Unless otherwise noted all components and CFM Specialty Home Products company supplied accessories are covered for a period of one year.

CONDITIONS AND LIMITATIONS

- This new Vermont Castings or Majestic product must be installed by a competent, authorized, service contractor. A licensed technician, as prescribed by the local jurisdiction must perform any installation/service work. It must be installed and operated at all times in accordance with the Installation and Operating instructions furnished with the product. Any alteration, willful abuse, accident, or misuse of the product shall nullify this warranty.
- This warranty is non-transferable, and is made to the original owner, provided that the purchase was made through an authorized supplier of the Company.
- The customer must pay for any Authorized Dealer in-home travel fees or service charges for in-home repair work. It is the dealers option whether the repair work will be done in the customer's home or in the dealer's shop.
- If upon inspection, the damage is found to be the fault of the manufacturer, repairs will be authorized at no charge to the customer parts and/or labor.
- Any part and/or component replaced under the provisions of this warranty is covered for six months or the remainder of the original warranty, whichever is longest.
- This warranty is limited to the repair of or replacement of part(s) found to be defective in material or workmanship, provided that such part(s) have been subjected to normal conditions of use and service, after said defect is confirmed by the Company's inspection.
- The company may, at its discretion, fully discharge all obligations with respect to this warranty by refunding the wholesale price of the defective part(s)
- Any installation, labor, construction, transportation, or other related costs/expenses arising from defective part(s), repair, replacement, or otherwise of same, will not be covered by this warranty, nor shall the Company assume responsibility for same. Further, the Company will not be responsible for any incidental, indirect, or consequential damages except as provided by law.
- *SOME STATES DO NOT ALLOW FOR THE EXCLUSION OR LIMITATIONS OF INCIDENTAL AND CONSEQUENTIAL DAMAGES OR LIMITATIONS ON HOW LONG AN IMPLIED WARRANTY LASTS, SO THE ABOVE LIMITATIONS MAY NOT APPLY TO YOUR CIRCUMSTANCES. THIS WARRANTY GIVES YOU SPECIFIC RIGHTS AND YOU MAY HAVE OTHER RIGHTS WHICH VARY FROM STATE TO STATE.*
- All other warranties-expressed or implied- with respect to the product, its components and accessories, or any obligations/liabilities on the part of the Company are hereby expressly excluded.
- The Company neither assumes, nor authorizes any third party to assume on its behalf, any other liabilities with respect to the sale of this Vermont Castings or Majestic product
- The warranties as outlined within this document do not apply to chimney components or other non CFM Specialty Home Products accessories used in conjunction with the installation of this product..
- Damage to the unit while in transit is not covered by this warranty but is subject to claim against the common carrier. Contact the dealer from whom you purchased your fireplace/stove (do not operate the appliance as this might negate the ability to process the claim with the carrier).
- The Company will not be responsible for:
  a) Down drafts or spillage caused by environmental conditions such as near-by trees, buildings, roof tops, hills, or mountains.
  b) Inadequate ventilation or negative air pressure caused by mechanical systems such as furnaces, fans, clothes dryers, etc.
- This warranty is void if:
  a) The fireplace has been operated in atmospheres contaminated by chlorine, fluorine, or other damaging chemicals.
  b) The fireplace has been subjected to prolonged periods of dampness or condensation
  c) Any damages to the fireplace, combustion chamber, heat exchanger or other components due to water, or weather damage, which is the result of but not limited to, improper chimney/venting installation.
  d) Any alteration, willful abuse, accident, or misuse of the product has occurred.

IF WARRANTY SERVICE IS NEEDED…

1) Contact your supplier. Make sure you have your warranty, your sales receipt, and the model/serial number of your CFM Specialty Home Products product.
2) DO NOT ATTEMPT TO DO ANY SERVICE WORK YOURSELF.

NATIONAL FIREPLACE INSTITUTE®

NFI

CERTIFIED

www.nficertified.org

We recommend that our gas hearth products be installed and serviced by professionals who are certified in the U.S. by the National Fireplace Institute® (NFI) as NFI Gas Specialists.

CFM Specialty Home Products

410 Admiral Blvd. • Mississauga, Ontario, Canada L5T 2N6 • 905-670-7777
www.majesticproducts.com • www.vermontcastings.com