Operating Instructions

Stud Welding Pistol
PS-1
PS-3K
PS-0K
PS-1K

soyer®

Operating Instructions

Stud Welding Pistol
PS-1
PS-3K
PS-0K
PS-1K

☐ Serial number*
Stud Welding Pistol PS-1 _____

☐ Serial number*
Stud Welding Pistol PS-3K _____

☐ Serial number*
Stud Welding Pistol PS-0K _____

☐ Serial number*
Stud Welding Pistol PS-1K _____

* Please mark your Stud Welding Pistol type here and enter the serial number so that these are available if you require service support.

Heinz Soyer Bolzenschweißtechnik GmbH
Etterschlag
Inninger Straße 14
82237 Wörthsee

Phone 08153 - 885 - 0
Telefax 08153 - 8030
Telex 5270 295 heso d

SOYER® is a registered trademark of Heinz Soyer Bolzenschweißtechnik GmbH.

It is prohibited to convey or reproduce this document, as well as to utilise or disclose its contents, unless this has been explicitly authorised.
In the event of noncompliance with this regulation, damages will be charged. All rights reserved, in particular in the event of patent grant or GM registration.

This is to certify that we have verified the contents of this publication which comply with the hard- and software described. Deviations, however, cannot be excluded, so that we cannot warrant for absolute compliance. The specifications in this documentation have been verified regularly and necessary corrections incorporated into the following versions. We appreciate any suggestions for improvement.

Date of issue: Dec. 1, 1994

© Heinz Soyer Bolzenschweißtechnik GmbH 1994 · All rights reserved

Subject to technical modifications.

Printed in the Federal Republic of Germany.

Zertifikat

Deutscher Akkreditierungs Rat

TGA-ZQ-004/93-00

DVS ZERT® e.V.

bescheinigt hiermit, daß das Unternehmen

Heinz Soyer Bolzenschweißtechnik GmbH

Inninger Str. 14

82237 Wörthsee-Etterschlag

für den Anwendungsbereich

Entwicklung, Herstellung, Vertrieb und Service der Bolzenschweißtechnik

ein Qualitätsmanagementsystem eingeführt hat und anwendet. Durch ein Audit wurde der Nachweis erbracht, daß dieses Qualitätsmanagementsystem die Anforderungen der Norm

DIN EN ISO 9001, Ausgabe August 1994

erfüllt.

Zertifikat-Registrier-Nr.: DE-96-001
Zertifikat gültig bis: Feb. 1999
Leitender Auditor

Dipl.-Ing. W. Pupp

Düsseldorf, den 12. Feb. 1996
Zertifizierungsstelle

Dipl.-Ing. M. Lehmann

DVS ZERT®

Table of Contents

1. General information 1-1

1.1 The following should be principally observed .. 1-1
1.2 Intended use 1-2
1.3 Information on the product 1-2
1.4 Serial number 1-2
1.5 Information on the documentation 1-3
1.5.1 Chapters of Operating Instructions 1-3
1.5.2 Information on the Operating Instructions 1-4
1.5.3 Reaction in the case of malfunctions 1-4
1.6 Contacts and service adress 1-4

2. Description of the Stud Welding Pistols 2-5

2.1 Technology of tip ignition 2-5
2.2 Stud Welding Pistol PS-1 2-6
2.3 Stud Welding Pistol PS-3K 2-7
2.4 Stud Welding Pistol PS-0K 2-8
2.5 Stud Welding Pistol PS-1K 2-9
2.6 Technical data 2-10

3. Safety instructions 3-11

3.1 Characterisation of references in the Operating Instructions 3-11
3.2 Staff qualification and training 3-12
3.3 Dangers resulting from non-observance of safety instructions 3-12
3.4 Safety-conscious working 3-12
3.5 Safety instructions for the User/Operator 3-13
3.6 The following should be observed prior to initialisation ... 3-13
3.7 Before starting welding operations ... 3-14
3.8 Safety measures at the installation site 3-14
3.9 Working with the Stud Welder 3-15
3.10 Safety instructions for maintenance, inspection and assembly operations 3-15
3.11 Independent retrofitting and spare parts production 3-15
3.12 Non-permissible operating modes 3-16

4. Setting the Stud Welding Pistol 4-17

4.1 Setting the stud holder 4-17
4.2 Installing the stud holder in the Stud Welding Pistol 4-18
4.3 Setting the spring pressure 4-19

5. Initiation 5-20

5.1 General view 5-20
5.2 Connecting the Stud Welding Pistols to the Stud Welder 5-21
5.3 Operation 5-21
5.4 Welding parameters 5-22
5.4.1 Stud Welder BMS-660-90 5-22
5.4.2 Stud Welder BMS-690-135 5-22
5.4.3 Stud Welder BMS-6H 5-23
5.4.4 Stud Welder BMS-8H 5-23

6. Quality control 6-24

6.1 General information 6-24
6.2 Demands on the company 6-24
6.3 Proof of qualification 6-24
6.4 Type and scope of testing 6-24
6.4.1 Normal work tests 6-25
6.4.2 Simplified work tests 6-25
6.5 Implementation of sample taking 6-25
6.5.1 Production of samples 6-25
6.5.2 Visual check 6-25
6.5.3 Tension test 6-26
6.5.4 Bending test 6-26

7. Maintenance 7-27

7.1 Stud welders 7-27
7.2 Replacing components 7-27

8. Spare parts 8-28

8.1 Spare parts list Stud Welding Pistol PS-1 8-28
8.2 Perspective presentation of Stud Welding Pistol PS-1 8-29
8.3 Spare parts list Stud Welding Pistol PS-3K 8-30
8.4 Perspective presentation of Stud Welding Pistol PS-3K 8-31
8.5 Spare parts list Stud Welding Pistol PS-0K 8-32
8.6 Perspective presentation of Stud Welding Pistol PS-0K 8-33
8.7 Spare parts list Stud Welding Pistol PS-1K 8-34
8.8 Perspective presentation of Stud Welding Pistol PS-1K 8-35

9. Troubleshooting 9-36

10. Standards and list of directives 10/11-38

11. Warranty terms 10/11-38

1 General information

1.1 The following should be principally observed ...

With this Stud Welding Pistol you have purchased a product which

- corresponds to the latest state-of-the-art in technology
- complies fully to the present-day safety standards and
- enables successful operating.

Please observe the following points in any case before installing the Stud Welding Pistol:

- Store the Operating Instructions in a place to which every Operator has access.
- Ensure that the respective Operator has read and understood the Operating Instructions before installation. Each Operator should sign a written confirmation to certify this.
- Prevent use of Stud Welder by unauthorised personnel.
- An electronics technician should check whether the electric supply is properly protected by fuse and earthed.
- Only trained personnel may use the Stud Welding Pistol.

MORTAL DANGER

Persons with cardiac pacemakers must not operate the Stud Welder and must keep away from a Stud Welder during operation. Ensure in particular that the Stud Welding System is not operated near electronically sensitive life-saving equipment, as in intensive wards in hospitals.

WARNING
Ensure that sufficient distance to electronic equipment is kept. Highly intensive electro-magnetic fields are created in stud welding which may permanently damage these devices (e.g. television sets).

- Furthermore, observe the safety instructions stated in Chapter 3.
- Call a doctor in the event of an accident.

MORTAL DANGER

The S-symbol is the symbol for welding current sources permitted for operation with increased electric danger. The S-symbol on our stud welders refers exclusively to the welding current circuit and not to the complete stud welder.

1.2 Intended use

With the SOYER® Stud Welding Pistols PS-1, PS-3K, PS-0K and PS-1K operating with tip ignition, a variety of pins and threaded bolts of steel and stainless steel can be welded (dimensions see Chapter 2.6: “Technical data”). It is also possible to weld fastening elements of brass. The Stud Welding Pistol PS-1 is also suitable for welding aluminium.

The visible side of the workpieces remain to a large extent unaffected by tool drag marks or deformation, so that if thin metal sheets of below 1mm sheet thickness are welded, a decorative appearance will be maintained.

Please contact either our parent company or one of our field engineers if you require consultation or a solution to your problem.

1.3 Information on the product

Manufacturer	Heinz Soyer Bolzenschweißtechnik GmbH Etterschlag Inninger Straße 14 D-82237 Wörthsee Phone 08153-885-0 Telefax 08153-8030 Telex 52700295 heso d
Product designation	Stud Welding Pistol PS-1 Stud Welding Pistol PS-3K Stud Welding Pistol PS-0K Stud Welding Pistol PS-1K
Country of origin	Germany

1.4 Serial number

The serial numbers of the Stud Welding Pistols are engraved into the handle.

1.5 Information on the documentation

The following Operating Instructions are delivered with the Stud Welding Pistols PS-1, PS-3K, PS-0K and PS-1K:

- Operating Instructions “Stud Welding Pistol PS-1, PS-3K, PS-0K and PS-1K”
  Order No.: P00277

For subsequent orders please refer to:

Heinz Soyer Bolzenschweißtechnik GmbH
Etterschlag
Inninger Straße 14
D-82237 Wörthsee
Phone 08153-885-0
Telefax 08153-8030
Telex 52700295 heso d

1.5.1 Chapters of Operating Instructions

The Operating Instructions describe how to handle and set the Stud Welding Pistols under normal conditions and comprise the following individual chapters:

- Chapter 1 “General Information”
  Information on application, the product and supplementary information
- Chapter 2: “Description of Stud Welding Pistols”
  Description of tip ignition technology and of the Stud Welding Pistols
- Chapter 3 “Safety instructions”
  All relevant safety regulations regarding initiation and operation of the Stud Welding System
- Chapter 4 “Setting the Stud Welding Pistol”
- Chapter 5 “Initiation”
- Chapter 6 “Quality Control”
- Chapter 7 “Maintenance”
  Maintenance measures
- Chapter 8 “Spare parts”
- Chapter 9 “Troubleshooting”
  Error characteristics, possible causes and elimination of errors
- Chapter 10 “Standards and list of directives”
- Chapter 11 “Warranty terms”

1.5.2 Information on Operating Instructions

Legal relationship

We draw attention to the fact that the contents of these Operating Instructions are neither part of any former or existing agreement, promise or legal relationship nor are designed to modify any such. All obligations of Heinz Soyer Bolzenschweißtechnik GmbH result from the respective purchase agreement containing the complete and generally valid warranties. These contractual warranty terms are neither extended nor limited by the implementation of these Operating Instructions.

> WARNING
> It is prohibited to carry out any actions on the Stud Welding System without having exact knowledge of the Operating Instructions or of the respective part. Ensure that only qualified personnel familiar with the Operating Instructions and the necessary technical activities (training) is permitted to operate the Stud Welding System.

1.5.3 Reaction in the case of malfunctions

If faults occur, first try to determine and eliminate the error causes according to the error characteristics listed in the Operating Instructions in Chapter 12 “Troubleshooting”. In all other cases, contact our service department.

Important information if service is required

If you require service, please ensure that the following information is available:

- Customer number
- Product designation
- Serial number
- Construction year
- Options
- Stud and workpiece material
- Stud diameters

This information will help us and you to save time and unnecessary costs, e.g. for false spare parts deliveries.

1.6 Contact and service address

If you have any questions relating to the operation of your Stud Welding System, retrofits or in any service case, please contact your responsible service office or the following address:

Heinz Soyer Bolzenschweißtechnik GmbH
Etterschlag
Inninger Straße 14
D-82237 Wörthsee
Phone 08153-885-0
Telefax 08153-8030
Telex 52700295 heso d

2 Description of the Stud Welding Pistols

2.1 Technology of tip ignition

The SOYER® Stud Welding Systems function according to the principle of capacitor discharge with tip ignition in compliance with DVS leaflet 0903 (German Welding Society).
This system utilises the abrupt discharge of a capacitor battery to generate electric arc energy.

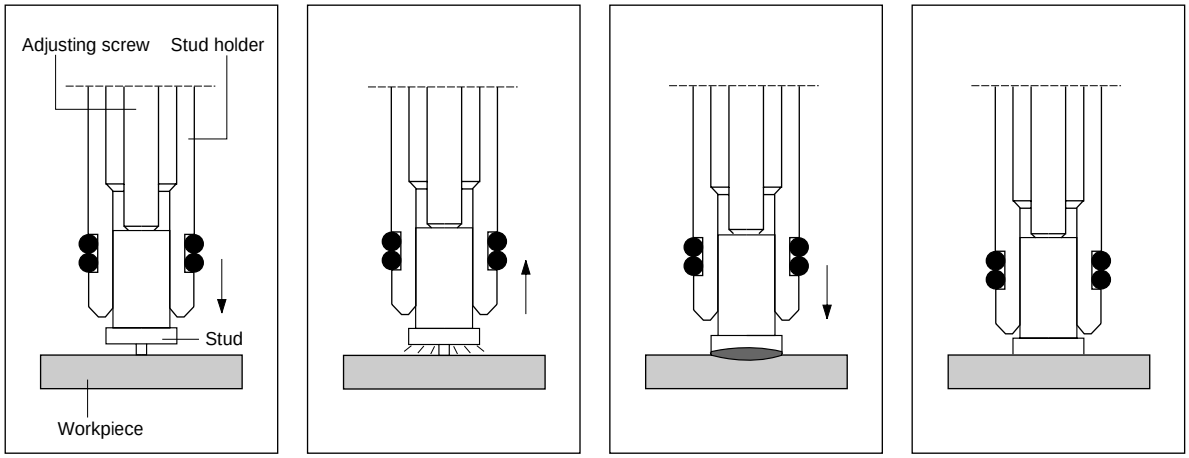

SZ.0001.E

The electric arc is initiated via the calibrated and close fit ignition tip on the welding studs and the welding elements. The stud weld base and the opposite surface of the workpieces is then melted slightly. The stud is automatically immersed into the thin melted zone and/or the liquid weld bath. After the immediate solidification of the material, an homogenous high-strength joint in an extremely short welding time ranging only between 1-3 milliseconds (0.001-0.003 sec.) is achieved.

2.2 Stud Welding Pistol PS-1

The SOYER® Stud Welding Pistol PS-1 is designed for a wide variety of applications. The field-proven patented Positioning Pistol has a handy design, is lightweight and is injection moulded of shock-proof, fully insulated plastic.

With this pistol the welding stud can be positioned exactly on a specific part of the workpiece without requiring any auxiliary aids. Templates are not required.

Before welding the stud position has to be marked or centred slightly. The calibrated ignition tip is then positioned on the marked point. When the pistol is operated, the stud is mechanically lifted. A necessary air gap is created between the tip and the workpiece. The stud is then mechanically moved to the marked point and is welded with electric arc ignition as soon as the marked point is reached.

The pistol guide is protected by rubber bellows especially against weld spatters and dirt.

A special spring pressure display with scale shows the spring pressure for the respective welding task and enables the reproducibility of welding joints, if necessary.

.

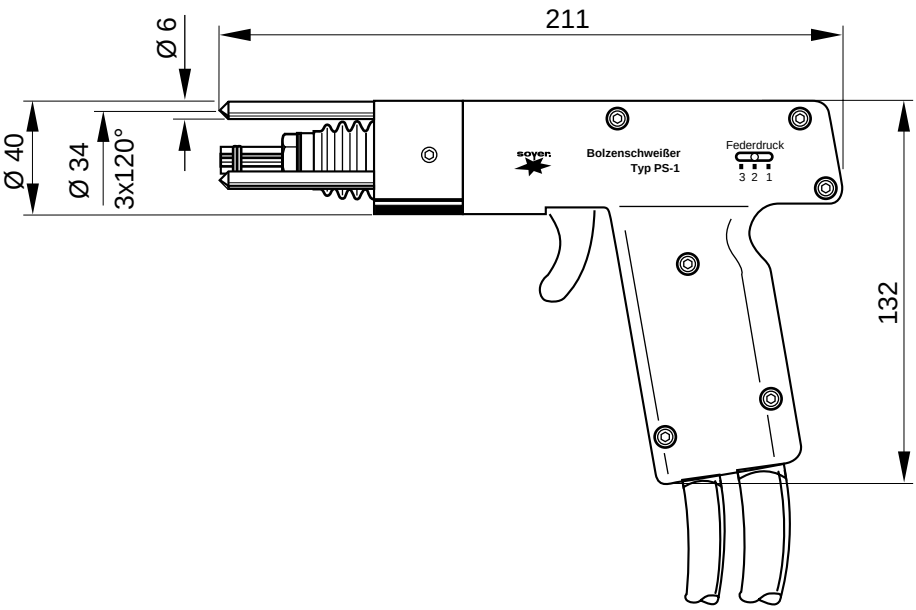

SZ05.0693.005.D

2.3 Stud Welding Pistol PS-3K

The SOYER® Stud Welding Positioning Pistol PS-3K for stud welding with tip ignition welds studs with ignition tip in accordance with DIN 32501 to exact positions on scribed surfaces or centre marks by means of spring pressure without any auxiliary aids. It is particularly suitable for stud welding to workpieces and materials with impure surfaces, such as zinc, rolling skin, forging scales and oxide films.

The Stud Welding Pistol PS-3K functions without backstroke and prevents a dislocation during the welding procedure. It is suitable for all stud welding systems with tip ignition.

It is equipped with a sturdy, shock and break-proof whole-body housing in a small and light-weight version. This closed pistol design guarantees additional stability and solidity advantages in contrast to the semimonocoque design.

With the modular concept it is possible to retrofit the pistol to other stud welding systems using existing mechanical sets.

The Stud Welding Pistol PS-3K corresponds to the latest state-of-the-art in technology and fits like a glove similar to all other SOYER Stud Welding Pistols thanks to its excellent ergonomic design.

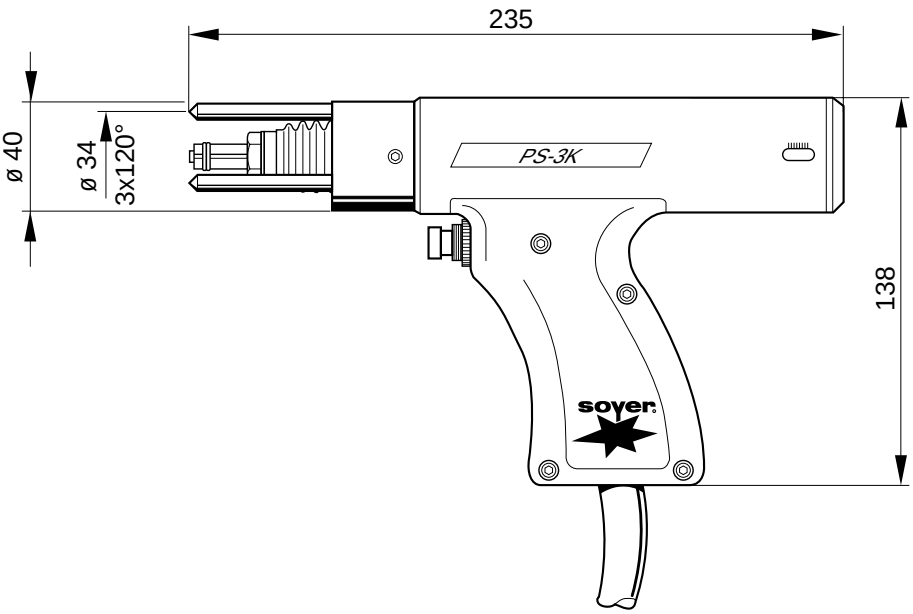

SZ06.0593.003.X

2.4 Stud Welding Pistol PS-0K

The SOYER® Stud Welding Positioning Pistol PS-0K is an innovation and unique on the world market due to its small dimensions.

It is suitable for contact welding in accordance with the tip ignition welding method for studs and pins of steel and special steel and was developed in particular for stud welding in narrow or hardly accessible spaces or on complicated workpieces.

Despite its small dimensions perfect welding results are nevertheless achievable with the Stud Welding Pistol PS-0K which can be compared with the welding qualities created with larger manual welding pistols.

This Stud Welding Pistol can be easily connected to all thyristor-driven stud welding equipment in accordance with the tip ignition principle.

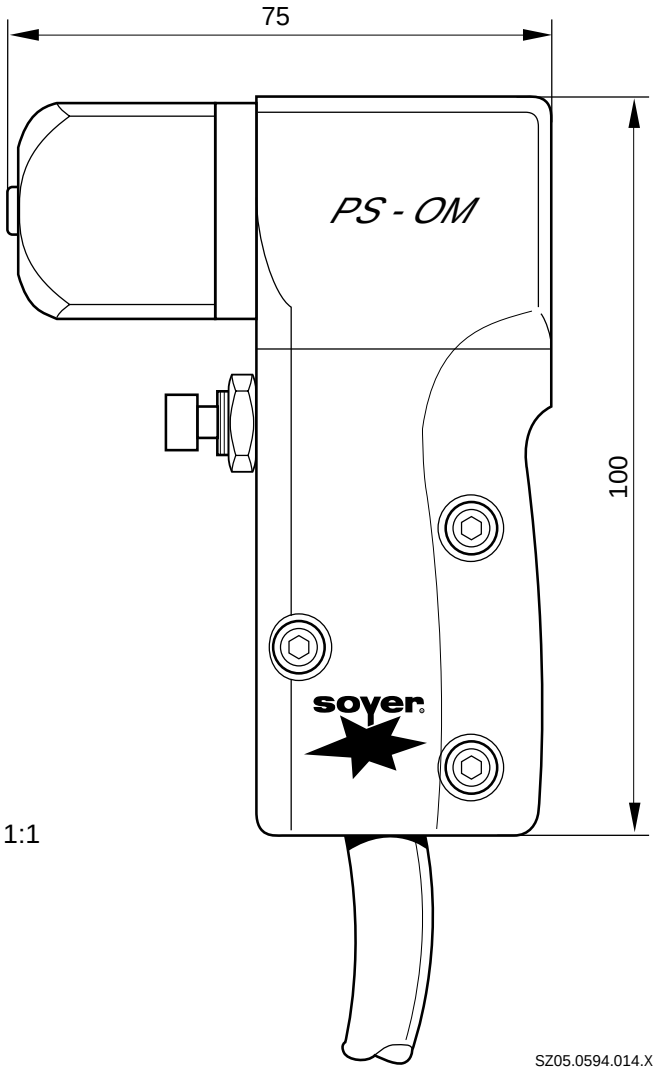

Display scale 1:1

2.5 Stud Welding Pistol PS-1K

The SOYER® Stud Welding Positioning Pistol PS-1K for stud welding with tip ignition is a shortened version of Stud Welding Pistol PS-3K (see Chapter 2.3). It welds studs with ignition tips in accordance with DIN 32501 exactly on scribed surfaces or centre marks by means of spring pressure without any auxiliary aids. It is particularly suitable for stud welding on workpieces and materials with impure surfaces, such as zinc, rolling skin, forging scales and oxide films, similar to the Stud Welding Pistol PS-3K. It is designed for application in narrow and hardly accessible spaces due to its compact construction.

The Stud Welding Pistol PS-1K functions without backstroke and prevents a dislocation during the welding procedure. It is suitable for all stud welding systems with tip ignition.

It is equipped with a sturdy, shock and break-proof whole-body housing in a small and light-weight version. This closed pistol design guarantees additional stability and solidity advantages in contrast to the semimonocoque design.

The Stud Welding Pistol PS-1K corresponds to the latest state-of-the-art in technology and fits like a glove similar to all other SOYER Stud Welding Pistols thanks to its excellent ergonomic design.

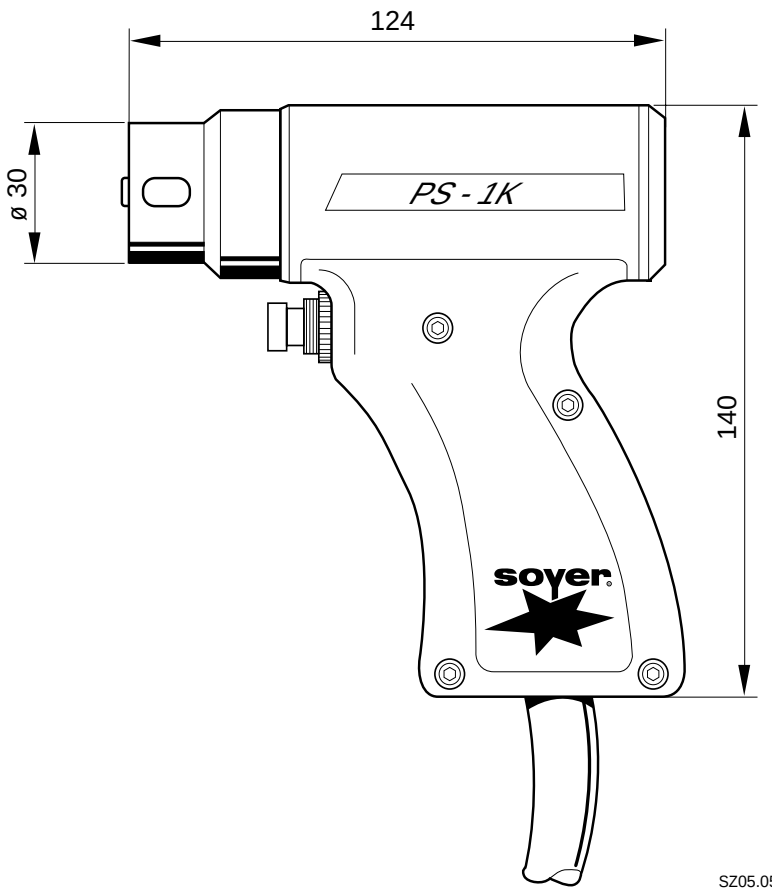

2.6 Technical data

	PS-1	**PS-3K**	**PS-0K**	**PS-1K**
Welding range - Threaded bolts - Studs	M3 - M8 Ø 2 - 8 mm	M3 - M10 Ø 2 - 10 mm	M3 - M8 Ø 3 - 8 mm	M3 - M8 Ø 3 - 8mm
Field of application	1*	2*	2*	3*
Welding system	Tip ignition in accordance with DVS Leaflet 0903			
Welding and control cable	3 m highly flexible			
Weight without cable	0.5 Kg	0.9 kg	0.3 kg	0.4 kg
1* Steel, stainless steel, aluminium and brass 2* Steel and stainless steel 3* Steel, stainless steel and brass				

3 Safety instructions

These Operating Instructions contain fundamental instructions which have to be observed in installation and/or operation. These Operating Instructions therefore have to be read by the Operator and the responsible technical personnel prior to assembly and initiation. They must furthermore be constantly available at the installation site.

Not only the general “Safety Instructions” listed under this main item, but also the special safety instructions e.g. for high temperatures, voltages etc. stated under other main items have to be observed.

3.1 Characterisation of references in the Operating Instructions

The safety instructions which may cause damage to persons in the case of non-observance, are specially characterised with the general danger symbol,

safety instructions in accordance with DIN 4844-W9,

warning of electric voltage with the

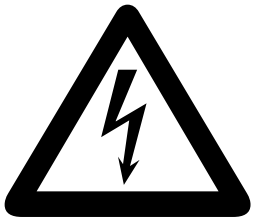

safety symbol in accordance with DIN 4844-W8.

The word ACHTUNG (CAUTION) or WARNUNG (WARNING) has been incorporated into safety references the non-observance of which may lead to dangers for the machine and its functions.

General instructions are characterised with the following symbol:

3.2 Staff qualification and training

The staff designated for operation, maintenance, inspection and assembly must fulfil the qualifications required for these operations. Field of responsibility, competence and control of staff must be exactly regulated by the user. If the staff do not possess the qualifications required, these must be provided with the necessary training and instructions. This can, if necessary, be implemented by the manufacturer/supplier on behalf of the user. Furthermore, the user shall ensure that the contents of the Operating Instructions are fully understood by the personnel.

The Schweißtechnische Lehr- und Versuchsanstalt München (SLV) (Training and Testing Institute of Welding) offers appropriate training courses.

3.3 Dangers resulting from non-observance of safety instructions

Non-observance of safety instructions may not only represent danger to persons, but also to the welding system and the environment. If the safety instructions are not observed, this may lead to a complete loss of warranty claims.

Non-observance may for example lead to the following individual dangers:

- Failure of important functions of the system
- Failure of prescribed methods for maintenance and repair
- Danger to persons by electric, mechanic, thermal and acoustic influences

3.4 Safety-conscious working

The safety instructions stipulated in these Operating Instructions, the existing national regulations governing accident prevention, as well as possible international work, operating and safety regulations of the Operator must be observed.

3.5 Safety instructions for the User/Operator

In stud welding dangers may arise as a result of

- electric current
- optical radiation
- harmful substances (fumes)
- acoustic shocks
- spraying sparks

You are therefore obliged to limit the dangers to an unavoidable minimum and to inform the Operator and other persons of such dangers.

MORTAL DANGER

Persons with cardiac pacemakers must not operate the Stud Welder and must keep away from Stud Welders in operation.

3.6 The following should be observed prior to initiation...

Before initiating the system, the following points must be observed:

- The Stud Welding System must not be operated by juveniles below 16 years of age
- Read through the complete Operating Instructions before initiating the system
- Only qualified personnel is authorised to operate the system
- Prevent unauthorised use of the system by children or by unqualified personnel
- Wear non-combustible, closed working clothes
- Wear a leather apron over your work dress. Weld spatters are generated during the welding operation
- Wear a helmet when carrying out welding operations above your head

DANGER

Do not weld with work dress which is soiled with easily combustible substances such as oil, grease, paraffin oil etc.

- Wear leather gloves with sleeves
- Wear neither rings, watches nor electrically conducting jewellery
- Wear protective goggles with eye-protecting lens of shade number 2. (DIN 58211, part 6). Weld spatters and light flashes are generated during welding operations.
- Wear protective goggles with side shields when removing slag
- Wear ear protection. A loud acoustic shock is generated when discharging the capacitors.

3.7 Before starting welding operations ...

- Verify the state of all cables before starting a welding operation
- Immediately replace any faulty cables and cable connections
- Ensure that ventilation openings in the stud welder housing are not covered. The Stud Welder may otherwise be damaged as a result of heat accumulation.

3.8 Safety measures at the installation site

- Ensure when installing the Stud Welder on tables or similar workshop furniture that the Stud Welder is positioned firmly and that the table or appropriate furniture can bear the appropriate load.
- Ensure that the power socket and the Stud Welder have been connected to the ground properly
- Observe fire prevention regulations and do not carry out any welding operations in hazardous locations
- Ensure that the room is ventilated well or if necessary, extract the welding vapours.

DANGER TO HEALTH

During welding operations vapours and suspended matters may be generated. In particular beware of fumes detrimental to health when using surface-treated materials. If possible only carry out welding operations in rooms which have a room height exceeding 3 m. Special regulations in accordance with VBG 15 are applicable for narrow rooms.

3.9 Working with the Stud Welder

* Observe all accident prevention regulations which are applicable for operating your Stud Welder

The accident prevention regulation VBG15 “Welding, Cutting and similar work methods” is applicable for Stud Welders. For more information contact the employer’s liability insurance association.

MORTAL DANGER

Do not weld with work dress which is soiled with easily combustible substances such as oil, grease, paraffin oil etc.

If an accident happens:

- switch off the Stud Welder, disconnect the power supply and
- call a doctor.

3.10 Safety instructions for maintenance, inspection and assembly operations

Only carry out maintenance work when the Stud Welder has come to a standstill

The User shall ensure that all maintenance, inspection and assembly operations are carried out by authorised and qualified technical personnel after having sufficiently informed himself by studying the Operating Instructions carefully.

Principally, operations may only be carried out when the Stud Welder has come to a standstill. The procedure to bring the Stud Welder to a standstill described in the Operating Maintenance Instructions must be observed.

Immediately after completing the work, ensure that all safety and protection features are restored and that these function.

3.11 Independent retrofitting and spare parts production

Retrofitting or modifications of the Stud Welder are only permissible with the manufacturer’s approval. Original spare parts and authorised accessories are designed to guarantee safety. The use of any other parts may result in an annulment of warranty for any damages thus caused.

3.12 Non-permissible operating modes

Limit values

Operational safety of the Stud Welder supplied can only be guaranteed if it is used in accordance with its purpose. The limit values specified in the “Technical Data” must not be exceeded under any circumstances.

4. Setting the Stud Welding Pistol

4.1 Setting the Stud Holder

The stud holders of the Stud Welding Pistols PS-1, PS-3K, PS-0K and PS-1K have the same construction. If long welding studs are used it is, however, due to the short construction form of the Stud Welding Pistols PS-0K and PS-1K necessary to appropriately shorten the stop screw (4) of the stud holders on these Welding Pistols.

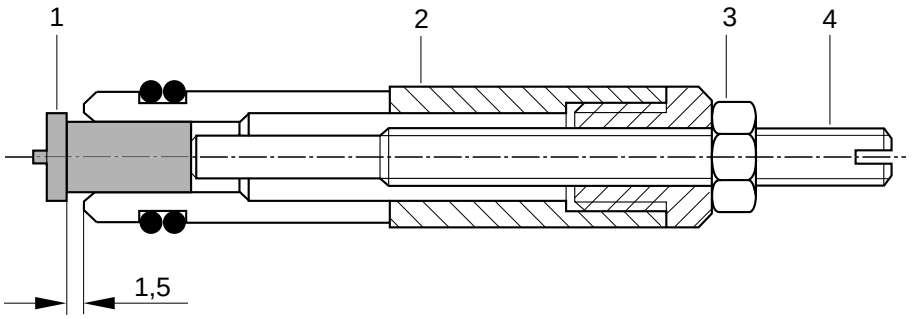

SZ06.0593.012.X

1 Stud
2 Stud holder
3 Counternut
4 Stop screw

If other stud diameters are used, different stud holders matching the stud diameters are required.

Set the stud holder as follows:

- Loosen counternut (3)
- Insert stud (1) into the stud holder.
  The top edge of the stud flange must project over the front edge of the stud holder by about 1.5 mm.

> NOTE
>
> The stud must be inserted until it reaches the stop screw (4).

- Adjust stop screw (4) in the stud holder by rotating movement until the dimension of 1.5 mm between the top edge of the stud flange and the front edge of the stud holder is reached.
- Tighten stop screw (4) with the counternut (3).

4.2 Installing the stud holder in the Stud Welding Pistol

The following diagram shows how the stud holder is installed in the Stud Welding Pistols PS-1 and PS-3K. The Stud Welding Pistols PS-0K and PS-1K are equipped with a support tube instead of the pistol feet (1).

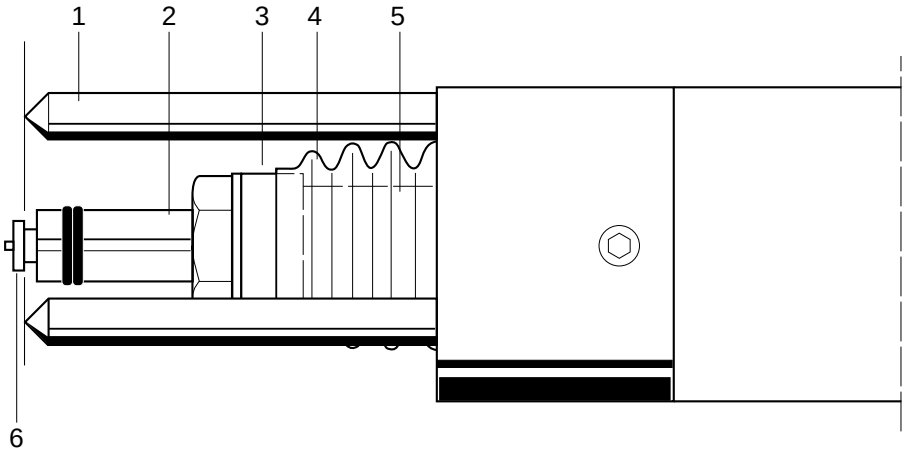

SZ05.0693.010.X

1 Pistol foot
2 Stud holder
3 Union nut
4 Bellows
5 Spring shaft
6 Stud flange

- Loosen union nut (3) on Stud Welding Pistols PS-1 and PS-3K using the socket spanner SW 17; for Stud Welding Pistols PS-0K and PS-1K socket spanner SW 14 is required.
- Push stud holder (2) into the spring shaft (5) until it stops.
- Fix stud holder (2) into position with union nut (3).

NOTE

The stud flange must project over the pistol feet tips and the support tube by the dimension of the flange thickness. If necessary, remove stud holder and correct projection by adjusting the stop screw.

4.3 Setting the spring pressure

The pressure with which the stud is pressed onto the workpiece during the welding process is referred to as spring pressure.

The following diagram displays the spring pressure setting for the Stud Welding Pistol PS-1 with spring pressure display. The Stud Welding Pistol PS-3K is equipped with a similar spring pressure display. The Stud Welding Pistols PS-0K and PS-1K do not display the spring pressure.

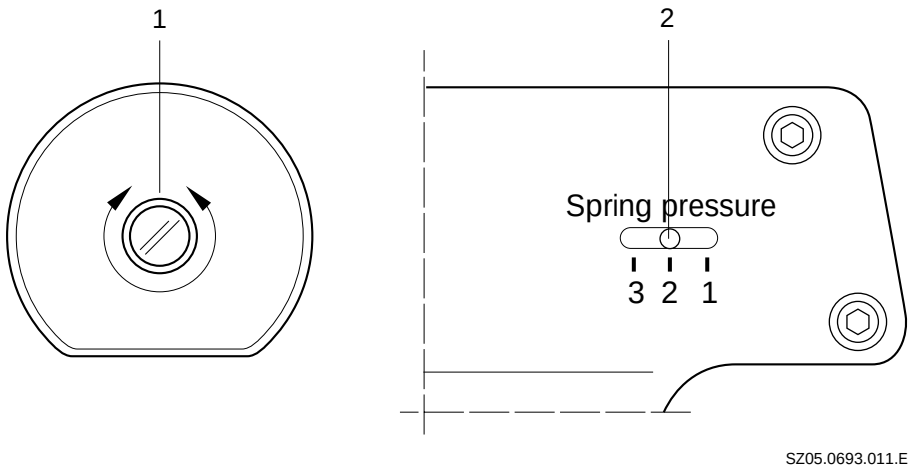

1 Setting screw
2 Spring pressure display

The spring pressure can be set on all Stud Welding Pistols described using the same setting screw (1). The spring pressure setting is displayed on the spring pressure scale (2). The spring pressure is set as follows:

- Turn setting screw (1) to the left until it stops
  Display position 1 = low pressure

- Turn setting screw (1) by 3.5 rotations to the right
  Display position 2 = medium pressure

- Turn setting screw (1) to the right until it stops
  Display position 3 = high pressure

The spring pressure setting depends on the quality of the welding stud and of the workpiece.

Carry out welding samples and tests before starting work to determine an optimum setting.

Samples should be taken several times during production to ensure that equally good welding results are achieved throughout the whole production process (see DVS Directive 0905, part 2 “How to ensure the quality of stud welding joints”).

5. Initiation

5.1 General view

The following diagram displays the Stud Welding Pistol PS-3K. It only differs slightly from the Stud Welding Pistols PS-1, PS-0K and PS-1K.

* The Stud Welding Pistols PS-0K and PS-1K are equipped with support tubes instead of the pistol feet (2).

* The Stud Welding Pistols PS-0K and PS-1K are not equipped with a spring pressure display.

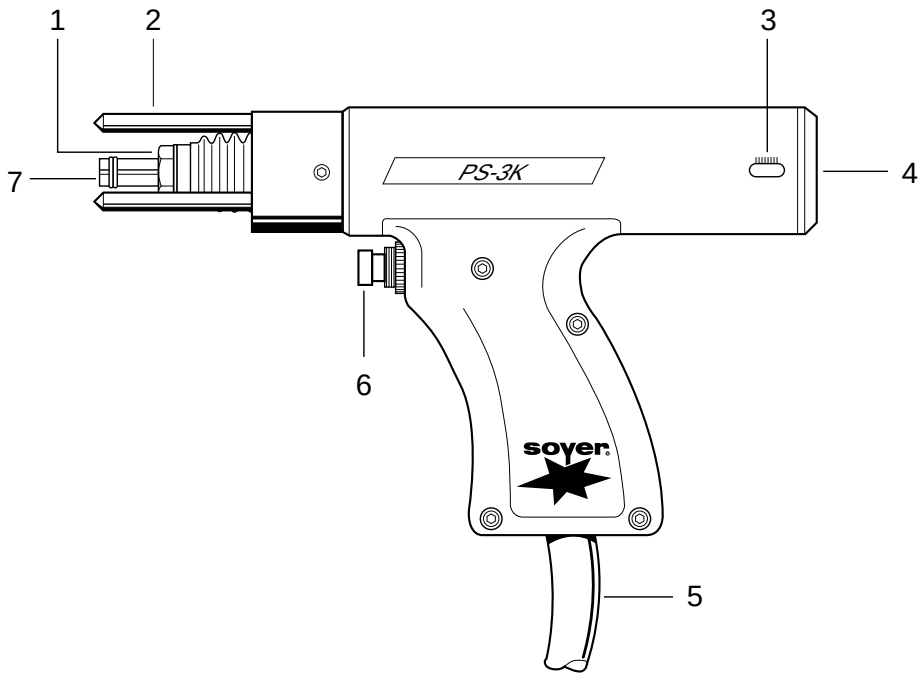

SZ05.0594.016.X

1 Union nut
2 Pistol foot
3 Spring pressure display
4 Setting screw for spring pressure
5 Connecting cable
6 Release switch
7 Stud holder

5.2 Connecting the Stud Welding Pistols to the Stud Welder

The Stud Welding Pistols are connected to the Stud welder using the pistol and control cables.

Type
Stud Welder
BMS-660-90, BMS-690-135

8 Socket for connecting welding cable
9 Socket for connecting control cable

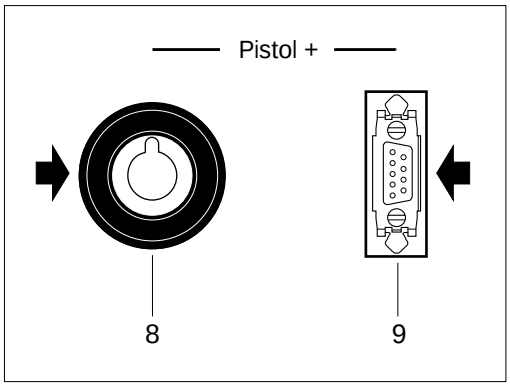

Type
Stud Welder
BMS-6H, BMS-8H

10 Socket for connecting welding cable
11 Socket for connecting control cable

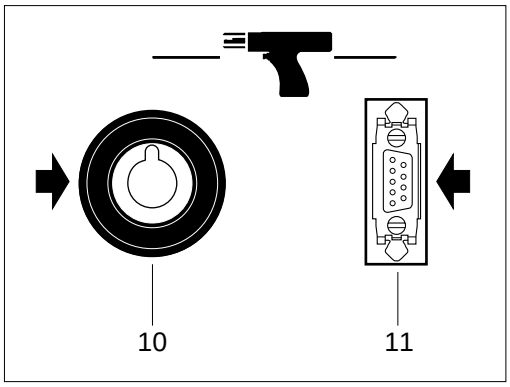

SZ.0015.E

- Insert welding cable plug of the Stud Welding Pistol into the welding cable socket (8/10)
- Insert control cable plug of the Stud Welding Pistol into the control cable socket (9/11) and lock with spring clip

Observe the connecting instructions in the Operating Instructions for Stud Welders.

5.3 Operation

- Create ground connection of the Stud Welder
- Connect Stud Welding Pistol as described in Chapter 5.2
- Set Stud Welding Pistol as described in Chapter 4
- Connect Stud Welder to power supply
- Set Stud Welder for the welding studs to be welded
- Insert welding stud into the stud holder
- Position Stud Welding Pistol onto the workpiece and press release switch

5.4 Welding parameters

The following charging voltages specified in the diagram below are standard values which have been determined in combination with the respective stud welder and the standard Welding Pistol PS-1. AlMg3 and StVK were used as stud material, AlMg3 or St. as base material. The charging voltages vary from the stated setting according to the material type, workpiece thickness and surface condition of the workpiece.

5.4.1 Stud Welder BMS-660-90

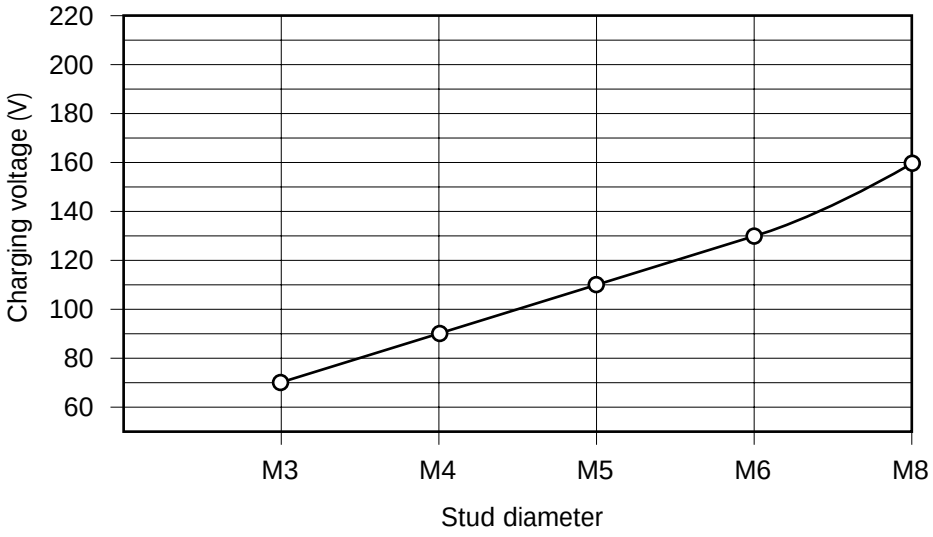

SZ.0011.E

5.4.2 Stud Welder BMS-690-135

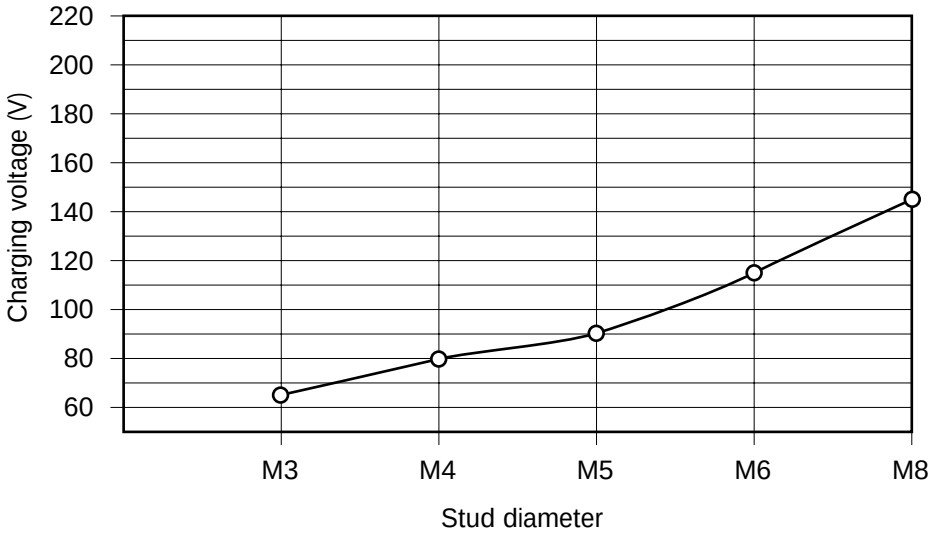

SZ.0012.E

5.4.3 Stud Welder BMS-6H

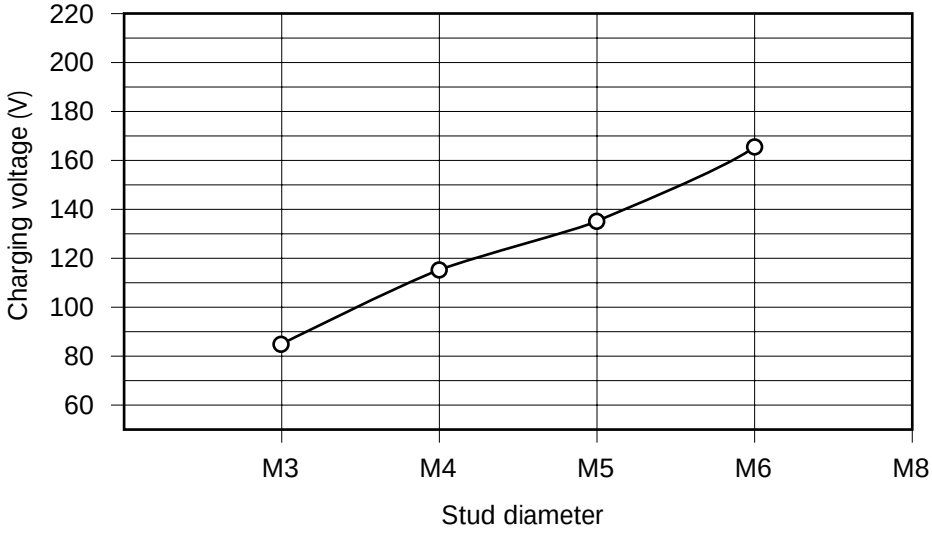

SZ.0013.E

5.4.4 Stud Welder BMS-8H

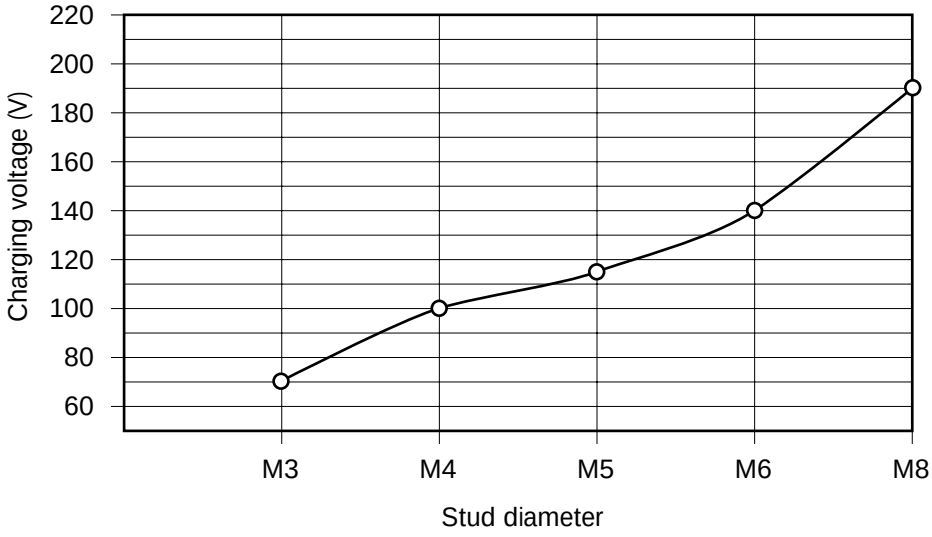

SZ.0014.E

6 Quality Control

6.1 General information

The DVS directive 0905, part 2 of April 1979 is valid with regard to ensuring the quality of stud welded joints. The tests described in this section have been written in a simplified form on the basis of this directive. They refer to work tests which are carried out and controlled by the User prior to and during welding works.

Heinz Soyer Bolzenschweißtechnik GmbH is a member of the Deutscher Verband für Schweißtechnik e.V. (DVS) (German Welding Society), Munich.

6.2 Demands on the company

The company must appoint a responsible welding supervisor and employ appropriately qualified operating personnel for stud welding (see DVS Directive 0905, part 2, section 4).

6.3 Proof of qualification

In the case of components which are subject to documentation requirements and/or stud welding works which are subject to acceptance in compliance with DIN 4100, DIN 4113, the manufacturing company must submit proof of competence or a qualification certificate (see DVS Directive 0905, part 2, sections 4.1 and 4.2). The competence qualification is applicable in particular for fastening constructions concerning safety regulations. If the Stud Welder is used in the construction industry, only permissible base and stud materials (see e.g. DIN 4100, clause 2.1, registration license for stainless steel ifBT; DIN 4113, part 2) may be applied.

6.4 Type and scope of testing

If the SOYER stud welding system is handled in compliance with regulations and the proper materials are selected, the welded joint strength (welding zone) will always be higher than that of the stud or base material. In practical operation, the following work tests are carried out:

- Normal work test (see DVS Directive 0905, part 2, section 5.1.2)
- Simplified work test (see DVS Directive 0905, part 2, section 5.1.2)

6.4.1 Normal work test

Normal work tests are generally to be implemented and controlled by the Operator prior to carrying out welding works at a construction and after a certain number of welds. The number of welds after which a normal work test is necessary is agreed with the customer.

The normal work test is restricted to the stud diameters, base material and stud welder type used. It includes the following tests:

- Visual check (all samples)
- Tension test (at least 3 samples)
- Bending test (at least 3 samples)

In case of doubt, the scope of testing should be extended in compliance with the DVS Directive 0905, part 2, section 5.1.1).

6.4.2 Simplified work test

Simplified work tests serve to control the correct stud welder setting and functioning of the equipment. They are carried out before starting any shift or after any interruption lasting for several hours.

The simplified work test includes:

- Visual check (all samples)
- Bending test (all samples)

6.5 Implementation of sample taking

6.5.1 Production of samples

The studs for the work test are welded to a sheet metal the minimum size of which is 700 mm x 200 mm. The same welding positions and distances to the borders shall be adhered to as on the construction part. Identical parts to those to be used in later production should be used for the tests provided this is possible and economically justifiable.

6.5.2 Visual check

The visual check serves as a rough control to detect any possible major faults. The uniformity of the welding is assessed. Tension or bending tests must be carried out in case of doubt.

6.5.3 Tension test

The tension test serves to test the metallic bond between the stud and the base material. At least 3 studs are welded and then axially loaded by means of an appropriate tensile testing machine unitl they break. If the Customer demands that a certain percentage of the welded studs should be tested with a predefined test load in production, a tensile testing machine with load unit display must be used.

If the stud breaks beyond the welding zone, the sample test is regarded as successful. If the stud breaks within the welding zone, the fracture must be examined. The unwelded surface must not exceed a maximum of 20% of the welding surface. In cases of doubt, the breaking load is to be examined in accordance with DIN 267, part 3.

If the number of faulty studs in any one random test exceeds the acceptance number in compliance with DIN 267, part 5, according to AQL 4, it is necessary to determine the reason for the faults. In such a case it is necessary to modify the setting values and then repeat the test.

6.5.4 Bending test

The bending test is a simple work test and is designed to roughly control the setting values selected. An undefined tension, pressure and bending is exerted on the welding zone. At least 3 studs are welded and bent by 30° using an attached laterally ground tube. The test is regarded as successful if no tear or fracture is detected in the welding zone. The acceptance figure in compliance with DIN 267, part 5, according to AQL 4 must be observed. If in one test batch the number of faulty parts exceeds the acceptance figure AQL 4 (see DIN 267), the reason for the faults must be determined and the complete test repeated.

7. Maintenance

7.1 Stud Welding Pistols

The Stud Welding Pistols have been constructed in such a way to require only a minimum of maintenance. The parts of the Stud Welding Pistol which may get damaged by weld spatters, such as stud holder and pistol feet and/or centering support tube should, however, be kept clean. The stud holder and pistol feet are wear-and-tear parts and should be replaced if they display any signs of wear and tear.

MORTAL DANGER

Before replacing any components, disconnect power supply. Electric and electronic components may only be replaced by a specialist, if necessary, consult SOYER® Customer Service.

7.2 Replacing components

Components may only be replaced by specially trained SOYER® service technicians. Perfect Stud Welder functions can only be guaranteed if original SOYER® spare parts are used.

MORTAL DANGER

Before replacing components, ensure that the capacitors have been discharged.

8. Spare parts

8.1 Spare parts list for Stud Welding Pistol PS-1

Item No.	Quantity	Designation	Order No.
		Stud Welding Pistol PS-1	P02110
		comprising	
1	3	Grounding foot	F01358
3	2	Threaded pin M6 x 6	M01797
4	1	Foot ring	F01377
5	1	Union nut	F01375
6	1	Rubber bellows	Fo1376
7	1	Guide sleeve	F01372
8	2	Straight pin 3 x 8	M01329
9	1	Working piston	F01368
10	1	Feather key	F01369
11	1	Release ring	F01370
12	1	Pistol shell LHS	F01366
13	1	Pistol shell RHS	F01367
14	1	Trigger handle	F01381
15	1	Straight pin 3 x 18	M01328
16	1	Straight pin 3 x 30	M01326
17	1	Pressure spring	F01383
18	1	Release arm	F01382
19	1	Straight pin 3 x 24	M01532
20	6	Cheese head screw M3 x 10	M01386
21	1	Clamping ring	F01371
22	1	Pressure spring	F01373
23	1	Spring guide	F01374
24	1	Set collar	F01378
25	1	Setting screw	F01379
26	1	Locking ring	M01371
27	2	Cheese head screw M2 x 10	M01332
28	1	Microswitch	E02091
29	1	Cable clip	M01387
30	1	Protection sleeve	E02093
31	1	Complete control cable	E02101
32	1	Ground cord	F01414/FA
33	1	Cheese head screw M4 x 10	M01087
34	1	Cheese head screw M4 x 6	M01085
35	1	Protection sleeve	E02092
36	1	Ground cable 25 mm^2	E02035
37	1	Ground plug	E01963
38	1	Strain relief	F01413
39	1	Threaded pin M5 x 8	M01337
40	1	Complete pistol cable	F01412/FA
		comprising items 35/36/37/38/39/41	
41	1	Threaded pin M8 x 8	M02108

8.2 Perspective presentation of Stud Welding Pistol PS-1

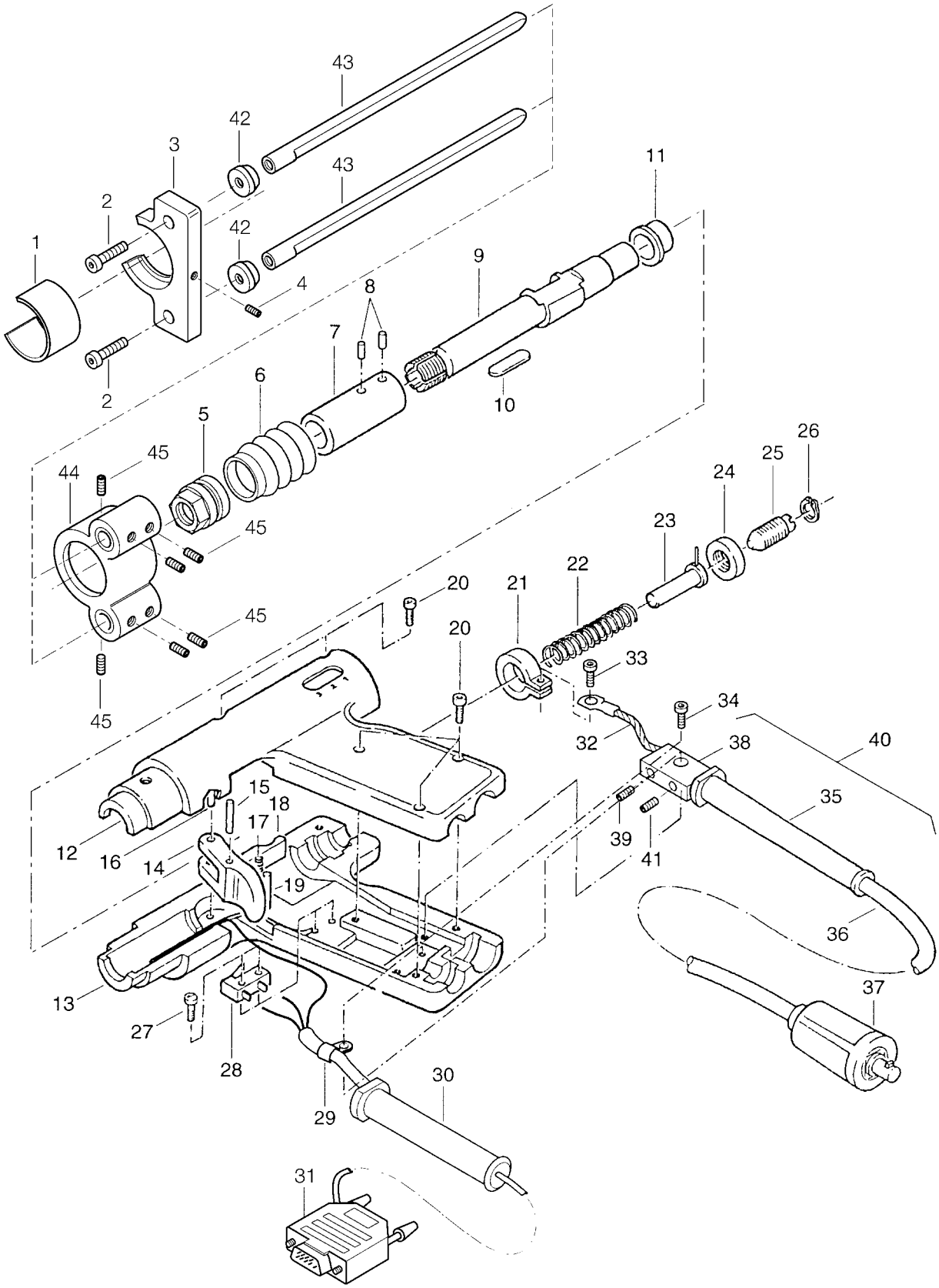

8.3 Spare parts list for Stud Welding Pistol PS-3K

Item No.	Quantity	Designation	Order No.
		Stud Welding Pistol PS-3K	P02131
		comprising	
1	1	Stud holder M3	F01151
		Stud holder M4	F01152
		Stud holder M5	F01153
		Stud holder M6	F01154
		Stud holder M7,1	F01155
		Stud holder M8	F01156
2	1	Union nut	F01375
3	1	Rubber bellows	F01376
4	3	Grounding foot	F01358
4.1	3	Grounding foot (special version, Meiko)	F01620
5	1	Foot ring	F01377
5.1	1	Foot ring (special design, Meiko, reference diameter Ø 43 mm)	F02652
6	2	Threaded pin M6 x 6	M01797
7	1	Delrin ring for bellows	F01736
8	1	Working piston	F01716
9	1	Piston sleeve	F01730
10	1	Small pistol half-shell	F01717/1
11	2	Spring dowel sleeve 3 x 10	M01562
12	1	Pistol sticker, type designation	M01579
13	1	Hand-actuated auxiliary switch	E02103
		Cap, red	E02104
14	1	Large pistol half-shell	F01717
15	3	Cheese head screw M4 x 8	M01998
16	3	Countersunk screw M3 x 6	M01561
17	3	Insert nut M4 x 6	M01809
18	1	Clamping ring	F01728
19	1	Insulating washer	F01737
20	1	Spring retainer	F01721
21	1	Spacer sleeve	F02990
22	1	Pressure spring	F01484
23	1	Adjustable adapter	F01731
24	1	Threaded pin M4x8	M01333
25	1	Locking ring	M01374
26	1	Clamping sleeve	F01734
27	1	Threaded pin M4x8	M01333
28	1	Setting screw	F01729
29	1	Sticker, company address	M01601
30	1	Protection sleeve	E02349
31	1	Ground plug	E01963
32	1	Ground cable	F02270/FA-E
33	1	Strain relief	F01715
34	1	Complete control cable	E02101
35	1	Threaded pin M5 x 8	M01337
36	1	Cable clip	M01387
37	1	Cheese head screw M4 x 10	M01087
38	1	Snap ring	M01074
39	1	Threaded pin M8 x 8	M02108

8.4 Perspective presentation of Stud Welding Pistol PS-3K

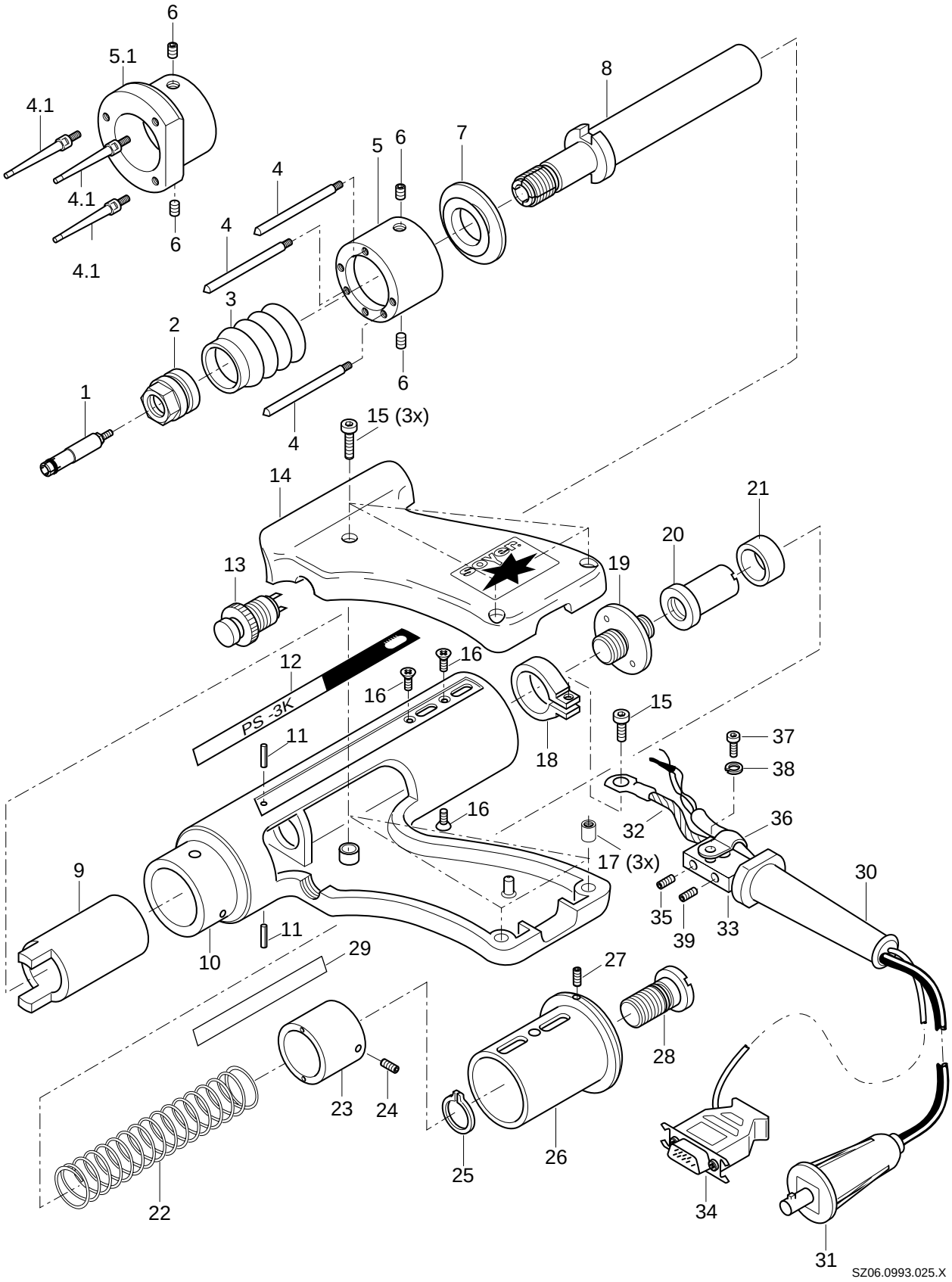

8.5 Spare parts list for Stud Welding Pistol PS-0K

Item No.	Quantity	Designation	Order No.
1	2	Cheese head screw M3 x 20, galvanised	M01311
2	1	Support tube	F01472
3	2	Cheese head screw M3 x 6, galvanised	M01713
4	1	Centring plate	F01471
5	1	Union nut, galvanised	F01469
6	1	Bellows	F02989
7	1	Guide sleeve	F01418
8	2	Threaded pin M4 x 6	M01315
9	1	Cap, red	E02104
10	1	Hand-actuated auxillary switch	E02103
11	1	Pistol housing, imprinted	F02152
12	3	Cheese head screw, M4 x 10	M01595
13	1	Working piston	F01419
14	1	Pressure spring	F01473
15	1	Pressure spring screw	F01468
16	3	Insert nut M4 x 6	M01809
17	4	Insert nut M3 x 6	M01699
18	1	Complete ground cable	F01474/FA
19	1	Strain relief	F01413
20	1	Antikink coil	E02349
21	1	Power cord, 15-core	E02101
22	1	Complete pistol cable	F01420/FA-E
23	1	Straight pin Ø 3 x 6	M01775
24	1	Threaded pin M5 x 8	M01337
25	1	Threaded pin M8 x 8	M02108

8.6 Perspective presentation of Stud Welding Pistol PS-0K

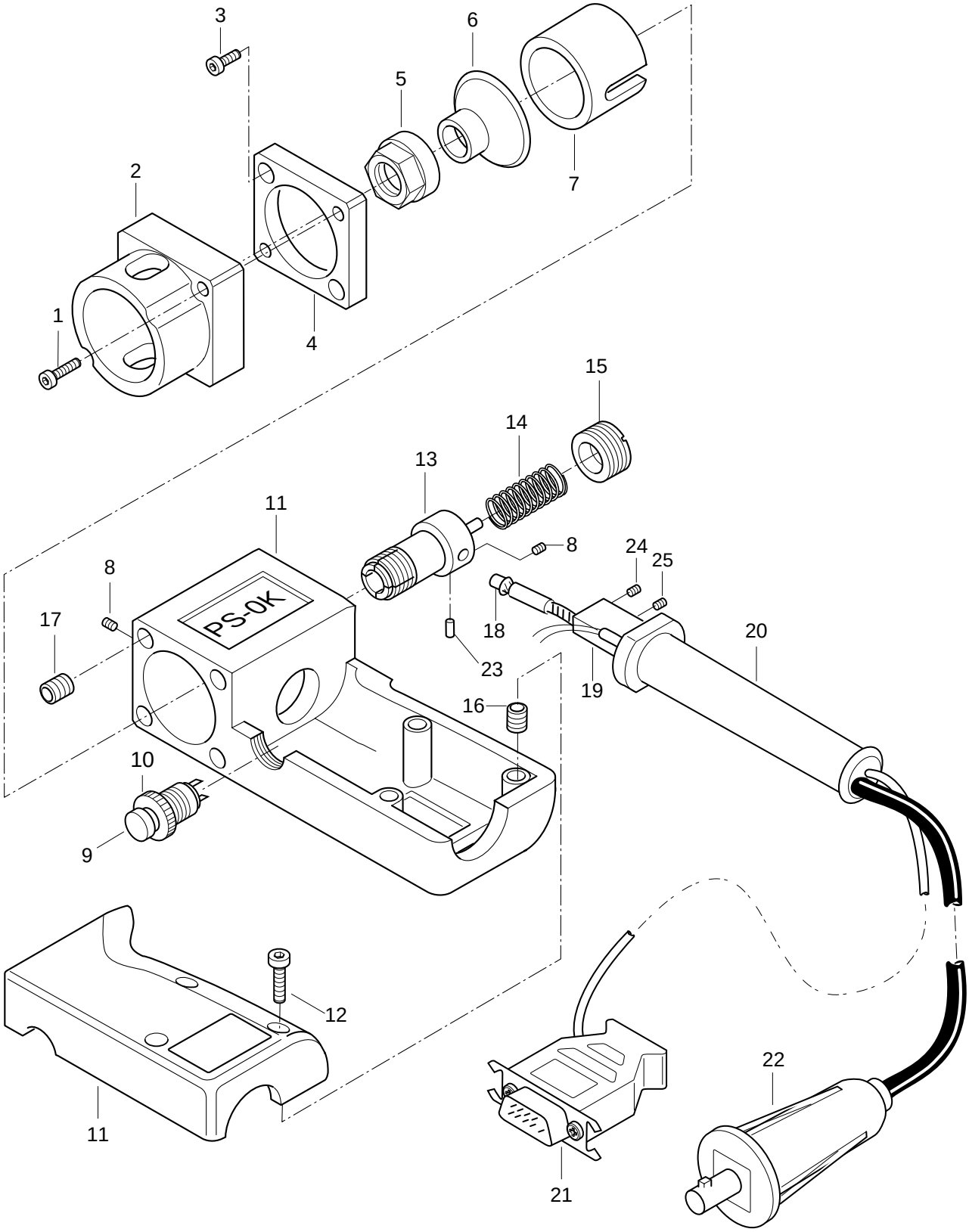

SZ.10.0001.X

8.7 Spare parts list for Stud Welding Pistol PS-1K

Item No.	Quantity	Designation	Order No.
1	2	Threaded pin M6 x 6, galvanised	M01797
2	1	Supporting tube	F02403
3	1	Guide sleeve	F02401
4	2	Spring dowel sleeve Ø 3 x 8	M01760
5	1	Pistol sticker PS-1K	M02042
6	1	Pistol sticker, adress	M01601
7	1	Cap, red	E02104
8	1	Hand-actuated auxillary switch	E02103
9	1	Pistol half-shell, small	F01717/1
10	3	Cheese head screw M4 x 8	M01998
11	2	Countersunk screw M3 x 6	M01561
12	1	Union nut	F01469
13	1	Bellows	F02989
14	1	Feather key	F01241
15	1	Working piston	F02400
16	1	Insulating disk	F02801
17	1	Spring retainer	F01721
18	1	Pistol half-shell, large	F01717
19	3	Insert nut M4 x 6	M01809
20	1	Pressure spring	F01484
21	1	Adjustable adapter	F02926
22	1	Threaded pin M4 x 8	M01333
23	1	Threaded pin M4 x 8	M01333
24	1	Sealing ring	M01374
25	1	Split taper socket	F02402
26	1	Adjustable screw	F01729
27	1	Complete ground cable	F02405/FA
28	1	Strain relief	F01715
29	1	Antikink coil	E02349
30	1	Control cable, 15-core	E02101
31	1	Pistol cable, complete	F01100/FA
32	1	PVC-pin	F03128
33	1	Threaded pin M4 x 6	M01315
34	1	Threaded pin M5 x 8	M01337
35	1	Threaded pin M8 x 8	M02108
36	1	PVC-clip	M01387
37	1	Cheese head screw M4 x 10, DIN 84	M01087
38	1	Spring washer M4, DIN 1274	M01074

8.8 Perspective presentation of Stud Welding Pistol PS-1K

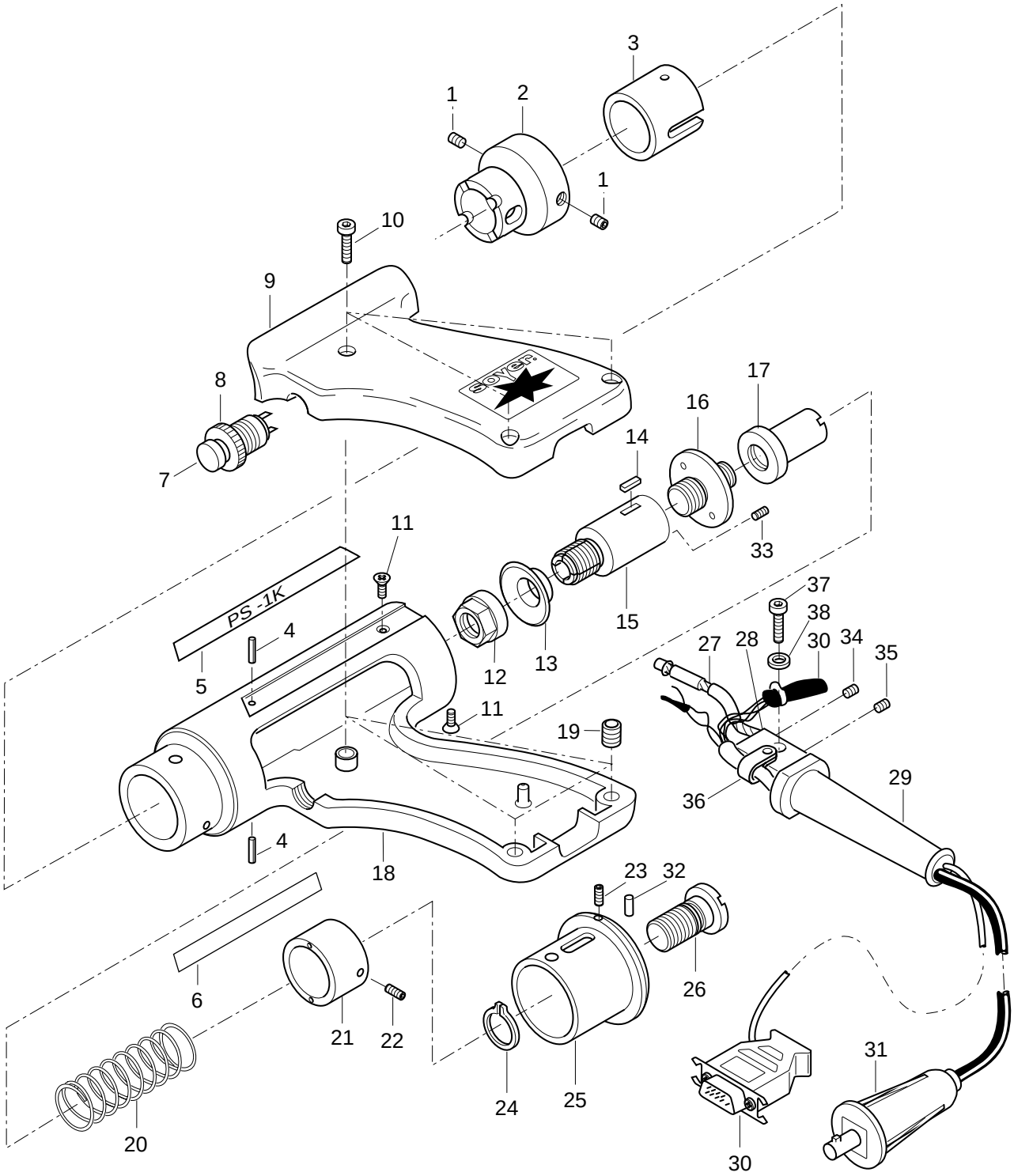

SZ.10.0002.X

9 Troubleshooting

The following list of errors, their causes and elimination in tabular form are designed to help you to eliminate errors immediately on the spot. If it is difficult or impossible to eliminate an error, please contact your responsible SOYER Customer Service representative or Heinz Soyer Bolzenschweißtechnik GmbH directly. You will find the address and telecommunication numbers in Chapter 1.6 on page 1-4.

MORTAL DANGER

Always disconnect the Stud Welder from the power supply by unplugging the power cord before opening the housing. Only specially trained and appropriately qualified personnel is allowed to carry out works on the electric power supply and welding system.

WARNING

Only trained and appropriately qualified personnel is authorised to replace any components of the Stud Welder.

Error	Cause → Error elimination
System does not weld, no sparking	Stud welder is not switched ON → Switch on system, mains switch and green control lamp “Operation” must light up
	Welding cable or control cable are not connected correctly and/or damaged → Connect cable correctly and/or examine to ensure that it is not damaged; replace, if necessary.
	Both grounds are not or incorrectly connected and/or ground clamps not connected to the workpiece → Connect ground cable and/or fasten ground clamps to the workpiece
	Welding points and/or ground connections on the workpiece are not metalically blank → Prepare workpiece and/or stud

Error	Cause → Error elimination
No electric arc is generated, even though system is ready for operation	Stud without ignition tip or centre mark too deep for the ignition tip → Use stud with ignition tip or reduce centre mark
	Fault in Stud Welder control and/or at the Stud Welding Pistol → Inform SOYER Customer Service
	Stud too loose in stud holder → Press stud holder together and/or tighten it
Stud thread scorched	Stud holder worn down → Replace stud holder
Varying welding results	Incorrect welding energy setting → Set welding energy
	Cable connections are too loose, transition resistances are generated → Check all cable connections and cable clamps to ensure tight fit
	Stud is too loose and/or has not been inserted into the stud holder until the stop is reached → Press stud into the holder until it stops, if necessary, replace stud holder
	Magnetic blow effect. The electric arc is pressed into a certain direction → Alter ground clamp attachment, place iron parts to the edges and/or rotate welding pistol
Intensive sparking, stud flange almost fully melted away	Welding energy setting too high → Reset welding energy using the energy range selector
Stud not welded with complete flange surface, deficient weld joint strength	Welding energy setting too low → Reset welding energy using the energy range selector
	Poor ground connection → Ensure tight fit of ground cable and ground clamps, if necessary tighten
	Workpiece surface too soiled → Clean workpiece surface
	Stud weld base deformed → Use new welding studs
	Incorrect setting of stud projection to the stud holder → Set stud projection to 2-3 mm (distance between stud holder and stud weld base)
	Incorrect spring pressure setting → Set spring pressure
	Tilted positioning of welding pistol → Ensure that all 3 feet of welding pistol are evenly and simultaneously positioned on the workpiece

10. Standards and List of Directives

• DIN 4100	Welded steel constructions with primarily dead load
• DIN 267, part 5	Screws, nuts and similar parts, technical delivery terms, examination and acceptance
• DIN 17100	General construction steels, quality standard
• DIN 8563, part 10	Ensuring the quality of welding works
• DIN 32500, part 3	Studs for stud welding with retract ignition
• DIN 50049	Certificate on material tests
• DIN 50125	Testing metallic materials, tensile samples, directives for production
• DIN 54111, part 1	Destruction-free testing methods
• DVS Leaflet 0902	Electric arc welding with retract ignition
• DVS Directive 0905, part 1	Ensuring the quality of stud welding joints
• DIN EN 292-2	Operating Instructions

11. Warranty Terms

We warrant for a period of 6 months for these Stud Welding Pistols in accordance with our Sales and Delivery Terms.

The warranty claim expires if damage is caused by improper operation, or if repairs or interferences have been made by unauthorised persons, or whenever accessories and spare parts have been used which do not match our equipment.

If welding studs purchased from other manufacturers are used, we shall not warrant for the quality of any such welding joints.

Heinz Soyer
Bolzenschweißtechnik GmbH
Etterschlag
Inninger Straße 14
D-82237 Wörthsee
Tel.: ++49-(0) 81 53 / 8 85-0
Fax: ++49-(0) 81 53 / 80 30
Internet: www.soyer.de
www.soyer.com
E-Mail: verkauf@soyer.de
export@soyer.de