Sunbeam

Thick & Thin and Cool Touch Toasters

Instruction Booklet

This book covers the use and care of the following Sunbeam Toasters:

TA2410 Thick & Thin 4 – 4 slice electronic toaster
TA2210 Thick & Thin 2 – 2 slice electronic toaster
TA1210 Cool Touch 2 – 2 slice electronic toaster

Please read these instructions carefully
and retain for future reference.

Contents

Sunbeam's Safety Precautions	**1**
Features of your Toaster	**2**
Using your Toaster	**6**
Care and Cleaning	**7**

Important instructions – retain for future use.

تأكد من تفهّم احتياطات السلامة المذكورة اعلاه

請務必理解上述的安全預防措施。

Assurez-vous que les précautions ci-dessus relatives à la sécurité sont bien comprises

Versichern Sie sich, dass die obenstehenden Sicherheitsmaßnahmen verstanden werden

Βεβαιώνετε πως οι παραπάνω προφυλάξεις ασφαλείας γίνονται κατανοητές

Pastikan bahwa tindakan-tindakan keselamatan seperti di atas dimengerti anda

Accertatevi che le suddette norme di sicurezza siano comprese a dovere

上記の注意事項をよくお読みになり、安全を御確認ください

Уверете се дека погоре споменатите мерки на претпазливост се добро разбрани

Asegúrese de que las precauciones de seguridad precedentes sean bien comprendidas

کاری بکنید که احتیاطهای بالا حتماً درك بشوند

ต้องแน่ใจว่า ข้อควรระวังเรื่องความปลอดภัยข้างต้น เป็นที่เข้าใจกันดี

Yukarda belirtilen güvenlik önlemlerinin anlaşıldığından emin olunuz

Xin kiểm chắc rằng những biện pháp làm an toàn kể trên được hiểu rõ

Sunbeam's Safety Precautions

SAFETY PRECAUTIONS FOR YOUR SUNBEAM TOASTER.

- Do not place any objects such as toast, bread or similar on top of your toaster when in use.
- Operate the toaster on a flat level surface.
- Use your toaster well away from walls, curtains, or other combustible materials.
- Do not leave your toaster unattended when in use.
- Clean crumb tray regularly.
- Do not allow crumbs to accumulate in the crumb tray.
- Do not toast stale bread, rice crackers or similar on a high setting as they may catch fire.
- WARNING: Never attempt to extract jammed toast, crumpets or muffins with a knife or any other object, as contact with the live element may cause electrocution.

Sunbeam is very safety conscious when designing and manufacturing consumer products, but it is essential that the product user also exercise care when using an electrical appliance. Listed below are precautions which are essential for the safe use of an electrical appliance:

- Read carefully and save all the instructions provided with an appliance.
- Always turn the power off at the power outlet before you insert or remove a plug. Remove by grasping the plug - do not pull on the cord.
- Turn the power off and remove the plug when the appliance is not in use and before cleaning.
- Do not use your appliance with an extension cord unless this cord has been checked and tested by a qualified technician or service person.
- Always use your appliance from a power outlet of the voltage (A.C. only) marked on the appliance.
- This appliance is not intended for use by persons (including children) with reduced physical, sensory or mental capabilities, or lack of experience and knowledge, unless they have been given supervision or instruction concerning use of the appliance by a person responsible for their safety.
- Children should be supervised to ensure that they do not play with the appliance.
- The temperature of accessible surfaces may be high when the appliance is operating.
- Never leave an appliance unattended while in use.
- Do not use an appliance for any purpose other than its intended use.
- Do not place an appliance on or near a hot gas flame, electric element or on a heated oven.
- Do not place on top of any other appliance.
- Do not let the power cord of an appliance hang over the edge of a table or bench top or touch any hot surface.
- Do not operate any electrical appliance with a damaged cord or after the appliance has been damaged in any manner. If damage is suspected, return the appliance to the nearest Sunbeam Appointed Service Centre for examination, repair or adjustment.
- For additional protection, Sunbeam recommend the use of a residual current device (RCD) with a tripping current not exceeding 30mA in the electrical circuit supplying power to your appliances.
- Do not immerse the appliance in water or any other liquid unless recommended.
- Appliances are not intended to be operated by means of an external timer or separate remote control system.
- This appliance is intended to be used in household and similar applications such as: staff kitchen areas in shops, offices and other working environments; farm houses; by clients in hotels, motels and other residential type environments; bed and breakfast type environments.

If you have any concerns regarding the performance and use of your appliance, please visit www.sunbeam.com.au or contact the Sunbeam Consumer Service Line.

Ensure the above safety precautions are understood.

Features of your Thick & Thin 4

Self-centring slots
Able to toast thick and thin bread.

Cool touch exterior
Remains cool to touch preventing burns and plastic wrappers clinging to the side of your toaster.

Removable crumb tray
Pulls out from underneath your toaster for easy removal of crumbs.

Cord storage
The cord can be wrapped underneath for safe and convenient storage.

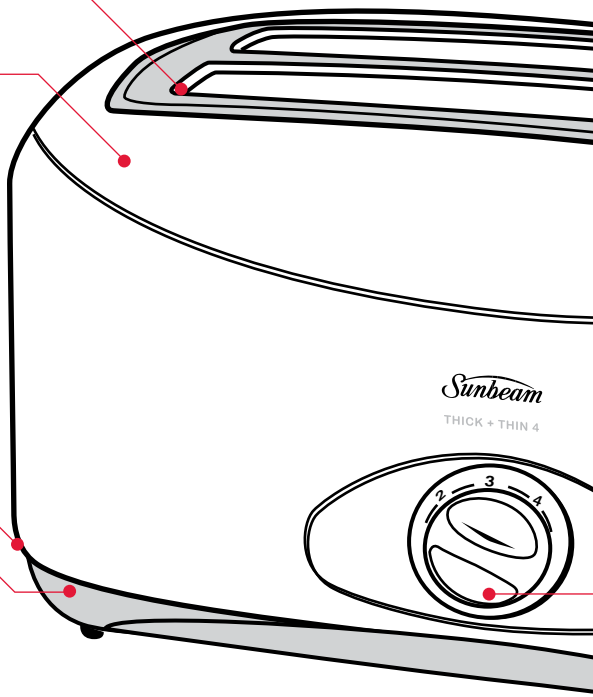

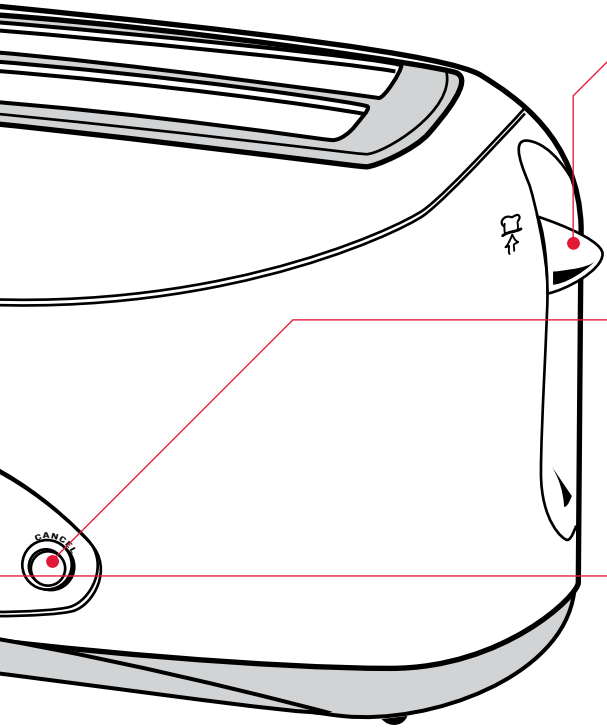

High lift lever
Raises the toast above the starting position so you can remove the toast from the toaster without burning your fingers. Ideal for crumpets and muffins.

Cancel button
Immediately interrupts any toasting cycle and pops the toast up.

Electronic browning control
Variable toast settings from 1-6 plus defrost, toast bread to your desired colour.

TA2410 illustrated
(also available in a 2 slice electronic toaster TA2210)

Features of your Cool Touch 2

Cool touch exterior

Remains cool to touch preventing burns and plastic wrappers clinging to the side of your toaster.

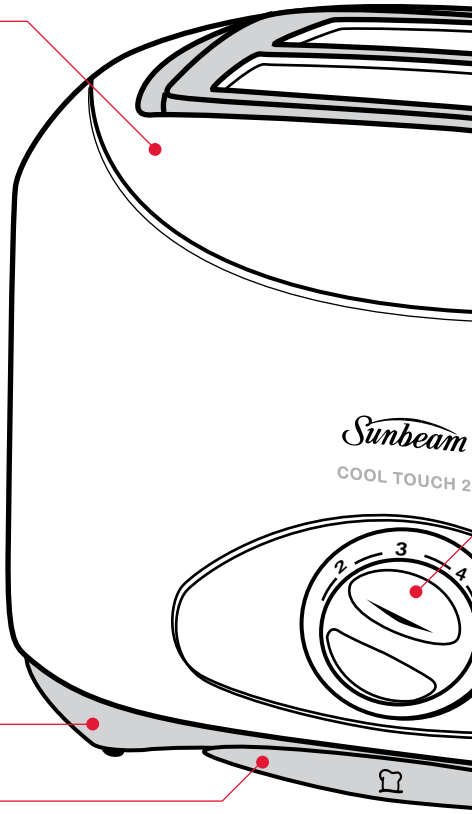

Cord storage

The cord can be wrapped underneath for safe and convenient storage.

Removable crumb tray

Pulls out from underneath your toaster for easy removal of crumbs.

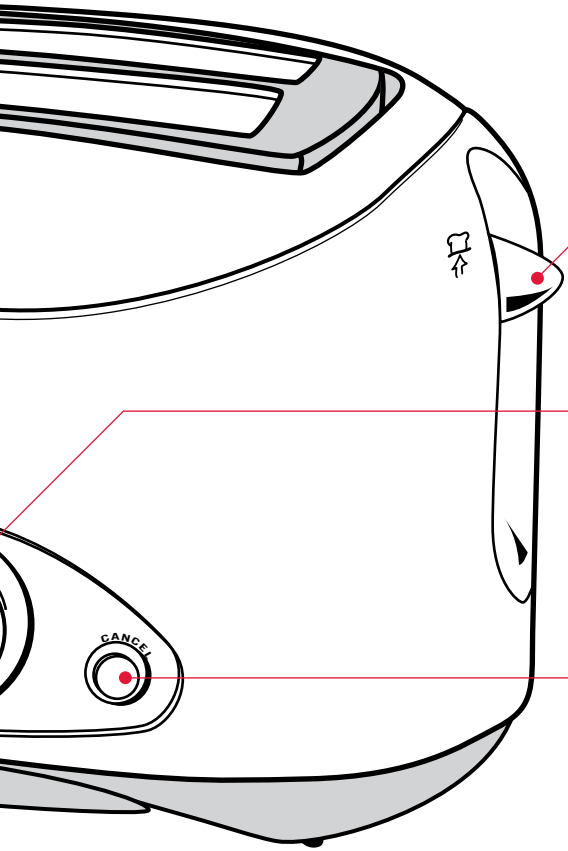

High lift lever

Raises the toast above the starting position so you can remove the toast from the toaster without burning your fingers. Ideal for crumpets and muffins.

Electronic browning control

Variable toast settings from 1-6 plus defrost, toast bread to your desired colour.

Cancel button

Immediately interrupts any toasting cycle and pops the toast up.

TA1210 illustrated

Using your toaster

Plug the toaster into a 230-240 volt AC power outlet and switch the power on.

Toasting Bread

1. Position the bread into the bread slot.
2. Select the desired colour setting on the Browning Control.

   Important: do not toast stale bread, rice crackers or similar on a high setting as they may catch fire.
3. Push the Toasting Lever down to commence the toasting cycle.
4. When the colour setting is achieved, the toaster will automatically turn off and pop the toast up. If you need to remove the toast before the cycle is complete, then press the Cancel button. The Cancel button will immediately interrupt the toasting cycle and pop the toast up.
5. To remove small pieces of toast or bagels, use the High Lift Lever to lift the toast above the starting position. This will prevent burning your fingers as you remove the toast.

Care and cleaning

Always turn the power OFF and remove the plug from the power outlet after use and before cleaning your toaster.

To clean the exterior.

Wipe exterior with a slightly dampened cloth and polish with a soft dry cloth.

Do not use metal scourers or abrasives as this may scratch the exterior surface.

Removable Crumb Tray.

To remove the crumbs, simply slide out the tray, empty and place it back in the toaster. Clean the crumb tray regularly. Do not allow crumbs to accumulate, as this may cause a potential fire hazard.

To clean the toaster interior.

Clean inside the toaster regularly. To do this, unplug the appliance, turn it upside down over the sink and gently shake all the crumbs out.

Notes

Sunbeam

12 Month Replacement Guarantee

In the unlikely event that this appliance develops any malfunction within 12 months of purchase (3 months commercial use) due to faulty materials or manufacture, we will replace it for you free of charge.

Should you experience any difficulties with your appliance, please phone our customer service line for advice on 1300 881 861 in Australia, or 0800 786 232 in New Zealand. Alternatively, you can send a written claim to Sunbeam at the address listed below. On receipt of your claim, Sunbeam will seek to resolve your difficulties or, if the appliance is defective, advise you on how to obtain a replacement or refund.

Your Sunbeam 12 Month Replacement Guarantee naturally does not cover misuse or negligent handling and normal wear and tear.

Similarly your 12 Month Replacement Guarantee does not cover freight or any other costs incurred in making a claim. Please retain your receipt as proof of purchase.

The benefits given to you by this guarantee are in addition to your other rights and remedies under any laws which relate to the appliance.

Our goods come with guarantees that cannot be excluded under the Australian Consumer Law and under the New Zealand Consumer Guarantees Act.

In Australia you are entitled to a replacement or refund for a major failure and for compensation for any other reasonably foreseeable loss or damage. You are also entitled to have the goods repaired or replaced if the goods fail to be of acceptable quality and the failure does not amount to a major failure.

Should your appliance require repair or service after the guarantee period, contact your nearest Sunbeam service centre.

For a complete list of Sunbeam's authorised service centres visit our website or call:

Australia

www.sunbeam.com.au

1300 881 861

Units 5 & 6, 13 Lord Street
Botany NSW 2019 Australia

New Zealand

www.sunbeam.co.nz

0800 786 232

26 Vestey Drive, Mt Wellington
Auckland, New Zealand

Need help with your appliance?

Contact our customer service team or visit our website for information and tips on getting the most from your appliance.

In Australia

Visit www.sunbeam.com.au

Or call 1300 881 861

In New Zealand

Visit www.sunbeam.co.nz

Or call 0800 786 232

Sunbeam is a registered trademark.

'Thick and Thin' is a trademark of Sunbeam Corporation.

Made in China.
Due to minor changes in design or otherwise, the product may differ from the one shown in this leaflet.

© Copyright. Sunbeam Corporation Limited 2011.

ABN 45 000 006 771

Units 5 & 6, 13 Lord Street
Botany NSW 2019 Australia

Unit 3, Building D
26 Vestey Drive
Mt Wellington Auckland
New Zealand

Sunbeam Corporation is a division of GUD Holdings Ltd.

11/10