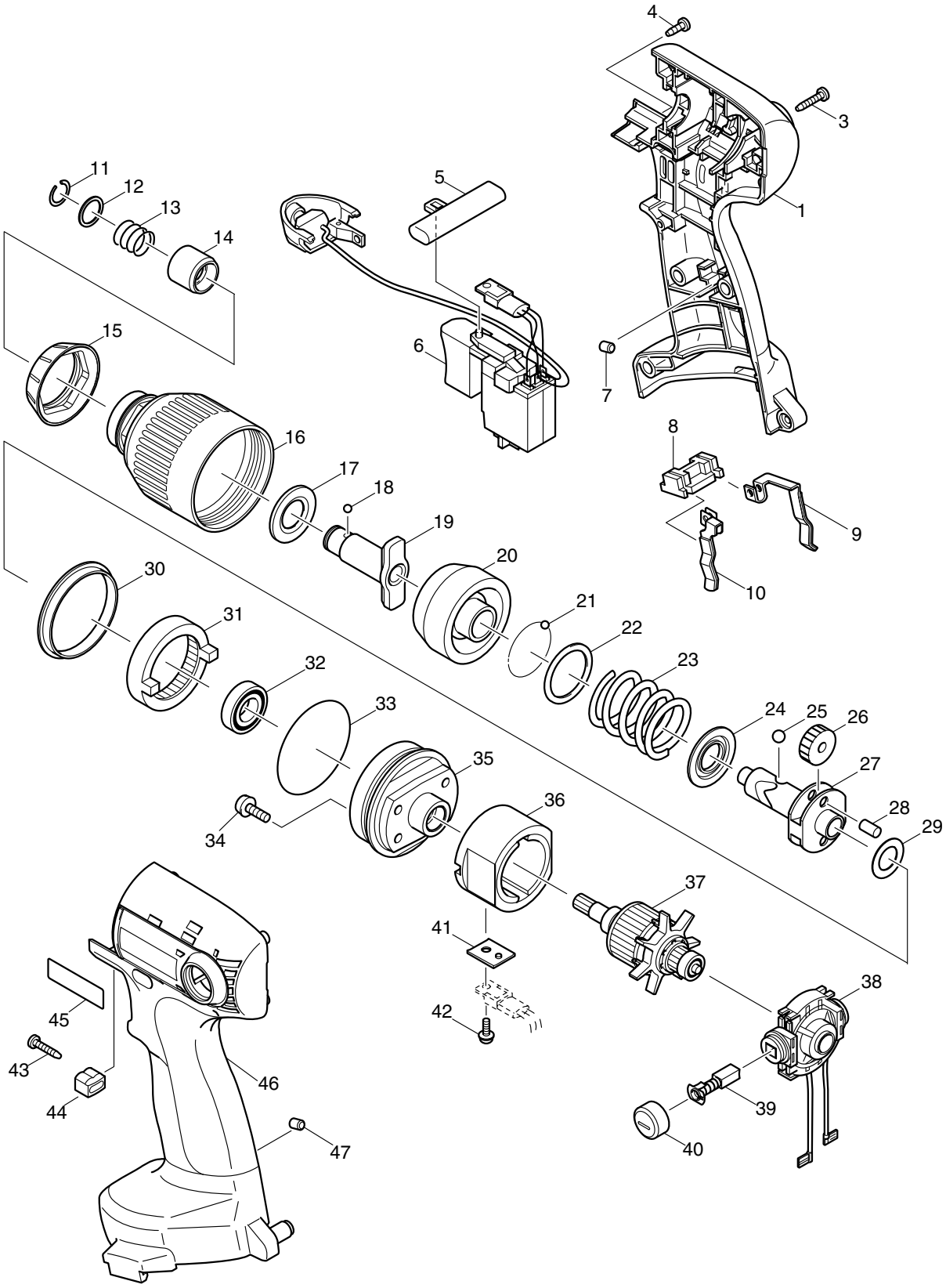
4
3
1
11
12
13
14
5
6
7
15
16
17
18
19
20
8
9
10
30
31
21
22
23
32
33
24
25
26
27
28
29
35
36
34
37
41
38
42
45
43
44
46
39
40
47

Item No.	Part No.	Qty. Used	Description
1	183774-9	1	HOUSING SET (Incl. 45,46)
3	266130-9	8	TAPPING SCREW BIND PT 3X16
4	266007-8	1	TAPPING SCREW BIND PT 3X10
5	416079-5	1	F/R CHANGE LEVER
6	638326-6	1	SWITCH UNIT
7	263024-9	1	RUBBER PIN 4
8	687085-9	1	HOLDER
9	654168-0	1	SPRING TERMINAL (+)
10	654169-8	1	SPRING TERMINAL (-)
11	231951-8	1	RING SPRING 11
12	267085-1	1	FLAT WASHER 12
13	233005-7	1	COMPRESSION SPRING 13
14	324420-7	1	SLEEVE
15	421847-3	1	BAMPER
16	153808-2	1	HAMMER CASE COMPLETE
17	261108-7	1	NYLON WASHER 14
18	216001-0	2	STEEL BALL 3.5
19	324432-0	1	ANVIL M
20	324262-9	1	HAMMER
21	216001-0	24	STEEL BALL 3.5
22	267175-0	1	FLAT WASHER 24
23	233274-0	1	COMPRESSION SPRING 25
24	267766-7	1	CUP WASHER 14
25	216011-7	2	STEEL BALL 5.6
26	226336-1	2	SPUR GEAR 22
27	324220-5	1	SPINDLE
28	256253-1	2	PIN 5
29	267212-0	1	FLAT WASHER 12
30	257254-2	1	RING 41
31	227112-6	1	INTERNAL GEAR 51
32	211150-8	1	BALL BEARING 6901ZZ
33	213620-3	1	O RING 46
34	911516-9	4	PAN HEAD SCREW M4X12
35	317597-5	1	INTERNAL GEAR CASE
36	638155-7	1	YORK UNIT
37	619084-3	1	ARMATURE
38	638156-5	1	ENDBELL COMPLETE
39	193466-2	1	CARBON BRUSH CB-434
40	643933-2	2	BRUSH HOLDER CAP
41	689096-0	1	FET SPACER
42	266170-7	1	TAPPING SCREW ST3X8
43	266130-9	1	TAPPING SCREW BIND PT 3X16
44	313118-1	1	STOPPER
45	819720-3	1	MAKITA LABEL
46	183774-9	1	HOUSING SET (Incl. 1,45)
47	263024-9	1	RUBBER PIN 4

ACCESSORIES

A01	414938-7	2	BATTERY COVER
A02	193157-5	2	NI-MH(2.6A) BATTERY 1234
A03	DC1804	1	BATTERY CHARGER
A04	183763-4	1	PLASTIC TOOL CASE (Incl. 1 ea. Shaft 324207-7, Handle 417723-7, Makita Label 819144-3, 2 ea. Latch 417724-5)