ORDERING REPLACEMENT PARTS

If you encounter any problems with this product, or if you need to order replacement parts, contact the ICON Health & Fitness Ltd. office, or write:

ICON Health & Fitness, Ltd.
Customer Service Department
Unit 4, Revie Road Industrial Estate
Beeston
Leeds, LS11 8JG
UK

Tel:

08457 089 009

Outside the UK: 0 (044) 113 387 7133
Fax: 0 (044) 113 387 7125

When ordering parts, please be prepared to give the following information:

- the MODEL NUMBER OF THE PRODUCT (PETL62022)
- the NAME OF THE PRODUCT (PROFORM® 12.5 QM treadmill)
- the SERIAL NUMBER OF THE PRODUCT (see the front cover of this manual)
- the KEY NUMBER and DESCRIPTION of the part(s) (see the EXPLODED DRAWING and PART LIST attached in the centre of this manual)

Part No. 196619 R0403A

Printed in Canada © 2003 ICON Health & Fitness, Inc.

Model No. PETL62022
Serial No. _____

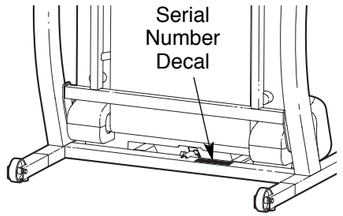

QUESTIONS?

As a manufacturer, we are committed to providing complete customer satisfaction. If you have questions, or if there are missing or damaged parts, please call:

08457 089 009

Or write:
ICON Health & Fitness, Ltd.
Unit 4
Revie Road Industrial Estate
Revie Road, Beeston
Leeds, LS11 8JG
UK

csuk@iconeurope.com

⚠ CAUTION

Read all precautions and instructions in this manual before using this equipment. Save this manual for future reference.

USER'S MANUAL

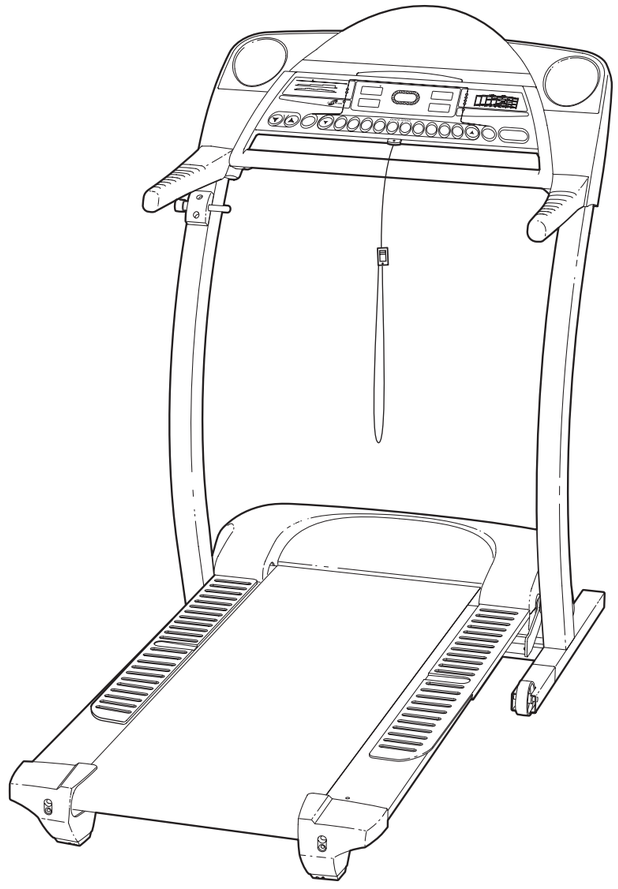

Visit our website at
www.iconeurope.com

PRO·FORM 12.5 QM

TABLE OF CONTENTS

IMPORTANT PRECAUTIONS 3
BEFORE YOU BEGIN 5
ASSEMBLY 6
HOW TO USE THE CHEST PULSE SENSOR 8
OPERATION AND ADJUSTMENT 9
HOW TO FOLD AND MOVE THE TREADMILL 22
TROUBLESHOOTING 23
CONDITIONING GUIDELINES 26
ORDERING REPLACEMENT PARTS . . . . . Back Cover

Note: An EXPLODED DRAWING and a PART LIST are attached in the centre of this manual.

PROFORM is a registered trademark of ICON Health & Fitness, Inc.

SUGGESTED STRETCHES

The correct form for several basic stretches is shown at the right. Move slowly as you stretch—never bounce.

1. Toe Touch Stretch

Stand with your knees bent slightly and slowly bend forward from your hips. Allow your back and shoulders to relax as you reach down toward your toes as far as possible. Hold for 15 counts, then relax. Repeat 3 times. Stretches: Hamstrings, back of knees and back.

2. Hamstring Stretch

Sit with one leg extended. Bring the sole of the opposite foot toward you and rest it against the inner thigh of your extended leg. Reach toward your toes as far as possible. Hold for 15 counts, then relax. Repeat 3 times for each leg. Stretches: Hamstrings, lower back and groin.

3. Calf/Achilles Stretch

With one leg in front of the other, reach forward and place your hands against a wall. Keep your back leg straight and your back foot flat on the floor. Bend your front leg, lean forward and move your hips toward the wall. Hold for 15 counts, then relax. Repeat 3 times for each leg. To cause further stretching of the achilles tendons, bend your back leg as well. Stretches: Calves, achilles tendons and ankles.

4. Quadriceps Stretch

With one hand against a wall for balance, reach back and grasp one foot with your other hand. Bring your heel as close to your buttocks as possible. Hold for 15 counts, then relax. Repeat 3 times for each leg. Stretches: Quadriceps and hip muscles.

5. Inner Thigh Stretch

Sit with the soles of your feet together and your knees outward. Pull your feet toward your groin area as far as possible. Hold for 15 counts, then relax. Repeat 3 times. Stretches: Quadriceps and hip muscles.

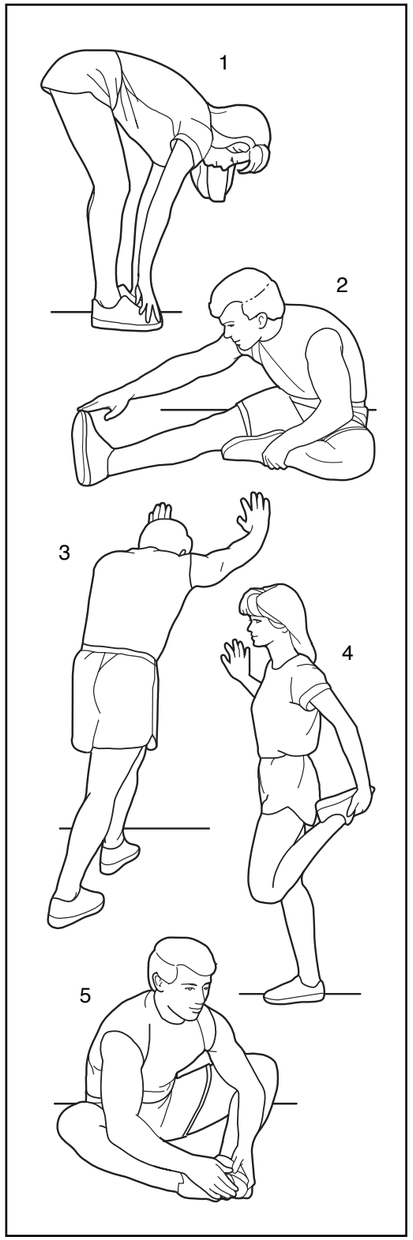

CONDITIONING GUIDELINES

⚠WARNING: Before beginning this or any exercise program, consult your physician. This is especially important for individuals over the age of 35 or individuals with pre-existing health problems.

The pulse sensor is not a medical device. Various factors, including your movement, may affect the accuracy of heart rate readings. The sensor is intended only as an exercise aid in determining heart rate trends in general.

The following guidelines will help you to plan your exercise program. For more detailed exercise information, obtain a reputable book or consult your physician.

EXERCISE INTENSITY

Whether your goal is to burn fat or to strengthen your cardiovascular system, the key to achieving the desired results is to exercise with the proper intensity. The proper intensity level can be found by using your heart rate as a guide. The chart below shows recommended heart rates for fat burning and aerobic exercise.

HEART RATE TRAINING ZONES

AEROBIC	165	155	145	140	130	125	115
MAX FAT BURN	145	138	130	125	118	110	103
FAT BURN	125	120	115	110	105	95	90
Age	20	30	40	50	60	70	80

To find the proper heart rate for you, first find your age near the bottom of the chart (ages are rounded off to the nearest ten years). Next, find the three numbers above your age. The three numbers define your "training zone." The lower two numbers are recommended heart rates for fat burning; the higher number is the recommended heart rate for aerobic exercise.

To measure your heart rate during exercise, use the pulse sensor.

Fat Burning

To burn fat effectively, you must exercise at a relatively low intensity level for a sustained period of time. During the first few minutes of exercise, your body uses easily accessible carbohydrate calories for energy. Only after the first few minutes does your body begin to use stored fat calories for energy. If your goal is to burn fat, adjust the speed and incline of the treadmill until your heart rate is near the lowest number in your training zone.

For maximum fat burning, adjust the speed and incline of the treadmill until your heart rate is near the middle number in your training zone.

Aerobic Exercise

If your goal is to strengthen your cardiovascular system, your exercise must be "aerobic." Aerobic exercise is activity that requires large amounts of oxygen for prolonged periods of time. This increases the demand on the heart to pump blood to the muscles, and on the lungs to oxygenate the blood. For aerobic exercise, adjust the speed and incline of the treadmill until your heart rate is near the highest number in your training zone.

WORKOUT GUIDELINES

Each workout should include the following three parts:

A Warm-up—Start each workout with 5 to 10 minutes of stretching and light exercise. A proper warm-up increases your body temperature, heart rate and circulation in preparation for exercise.

Training Zone Exercise—After warming up, increase the intensity of your exercise until your pulse is in your training zone for 20 to 60 minutes. (During the first few weeks of your exercise program, do not keep your pulse in your training zone for longer than 20 minutes.) Breathe regularly and deeply as you exercise—never hold your breath.

A Cool-down—Finish each workout with 5 to 10 minutes of stretching to cool down. This will increase the flexibility of your muscles and will help prevent post-exercise problems.

EXERCISE FREQUENCY

To maintain or improve your condition, complete three workouts each week, with at least one day of rest between workouts. After a few months, you may complete up to five workouts each week if desired. The key to success is to make exercise a regular and enjoyable part of your everyday life.

IMPORTANT PRECAUTIONS

⚠WARNING: To reduce the risk of burns, fire, electric shock, or injury to persons, read the following important precautions and information before operating the treadmill.

1. **It is the responsibility of the owner to ensure that all users of this treadmill are adequately informed of all warnings and precautions.**
2. **Use the treadmill only as described.**
3. **Place the treadmill on a level surface, with at least 2.5 m (8 ft.) of clearance behind it and 0.5 m (2 ft.) on each side. Do not place the treadmill on a surface that blocks any air openings. To protect the floor or carpet from damage, place a mat under the treadmill.**
4. **Keep the treadmill indoors, away from moisture and dust. Do not put the treadmill in a garage or covered patio, or near water.**
5. **Do not operate the treadmill where aerosol products are used or where oxygen is being administered.**
6. **Keep children under the age of 12 and pets away from the treadmill at all times.**
7. **The treadmill should not be used by persons weighing more than 115 kg (250 lbs.).**
8. **Never allow more than one person on the treadmill at a time.**
9. **Wear appropriate exercise clothes when using the treadmill. Do not wear loose clothes that could become caught in the treadmill. Athletic support clothes are recommended for both men and women. Always wear athletic shoes. Never use the treadmill with bare feet, wearing only stockings, or in sandals.**
10. **When connecting the power cord (see page 9), plug the power cord into an earthed circuit. No other appliance should be on the same circuit. When replacing the fuse, an ASTA approved BS1362 type should be fitted to the fuse carrier. A 13 amp fuse should be used.**
11. **If an extension cord is needed, use only a 3-conductor, 1 mm² (14-gauge) cord that is no longer than 1.5 m (5 ft.).**
12. **Keep the power cord away from heated surfaces.**
13. **Never move the walking belt whilst the power is turned off. Do not operate the treadmill if the power cord or plug is damaged, or if the treadmill is not working properly. (See BEFORE YOU BEGIN on page 5 if the treadmill is not working properly.)**
14. **Never start the treadmill whilst you are standing on the walking belt. Always hold the handrails whilst using the treadmill.**
15. **The treadmill is capable of high speeds. Adjust the speed in small increments to avoid sudden jumps in speed.**
16. **The pulse sensor is not a medical device. Various factors, including the user's movement, may affect the accuracy of heart rate readings. The pulse sensor is intended only as an exercise aid in determining heart rate trends in general.**
17. **Never leave the treadmill unattended whilst it is running. Always remove the key, unplug the power cord, and move the on/off switch to the off position when the treadmill is not in use. (See the drawing on page 5 for the location of the on/off switch.)**
18. **Do not attempt to raise, lower, or move the treadmill until it is properly assembled. (See ASSEMBLY on page 6, and HOW TO FOLD AND MOVE THE TREADMILL on page 22.) You must be able to safely lift 20 kg (45 lbs.) in order to raise, lower, or move the treadmill.**
19. **Do not change the incline of the treadmill by placing objects under the treadmill.**
20. **When folding or moving the treadmill, make sure that the storage latch is fully closed.**
21. **When using iFIT.com CDs and videos, an electronic "chirping" sound will alert you when the speed and/or incline of the treadmill is about to change. Always listen for the "chirp" and be prepared for speed and/or incline changes. In some instances, the speed and/or incline may change before the personal trainer describes the change.**

22. When using iFIT.com CDs and videos, you can manually override the speed and incline settings at any time by pressing the speed and incline buttons. However, when the next "chirp" is heard, the speed and/or incline will change to the next settings of the CD or video program.

23. Always remove iFIT.com CDs and videos from your CD player or VCR when you are not using them.

24. Inspect and properly tighten all parts of the treadmill regularly.

25. Never insert or drop any object into any opening.

26. **DANGER:** Always unplug the power cord immediately after use, before cleaning the treadmill, and before performing the maintenance and adjustment procedures described in this manual. Never remove the motor hood unless instructed to do so by an authorised service representative. Servicing other than the procedures in this manual should be performed by an authorised service representative only.

27. This treadmill is intended for in-home use only. Do not use this treadmill in any commercial, rental, or institutional setting.

⚠WARNING: Before beginning this or any exercise program, consult your physician. This is especially important for persons over the age of 35 or persons with pre-existing health problems. Read all instructions before using. ICON assumes no responsibility for personal injury or property damage sustained by or through the use of this product.

SAVE THESE INSTRUCTIONS

The decals shown have been placed on your treadmill. If a decal is missing, or if it is not legible, please call our Customer Service Department to order a free replacement decal (see the back cover of this manual). Apply the decal in the location shown.

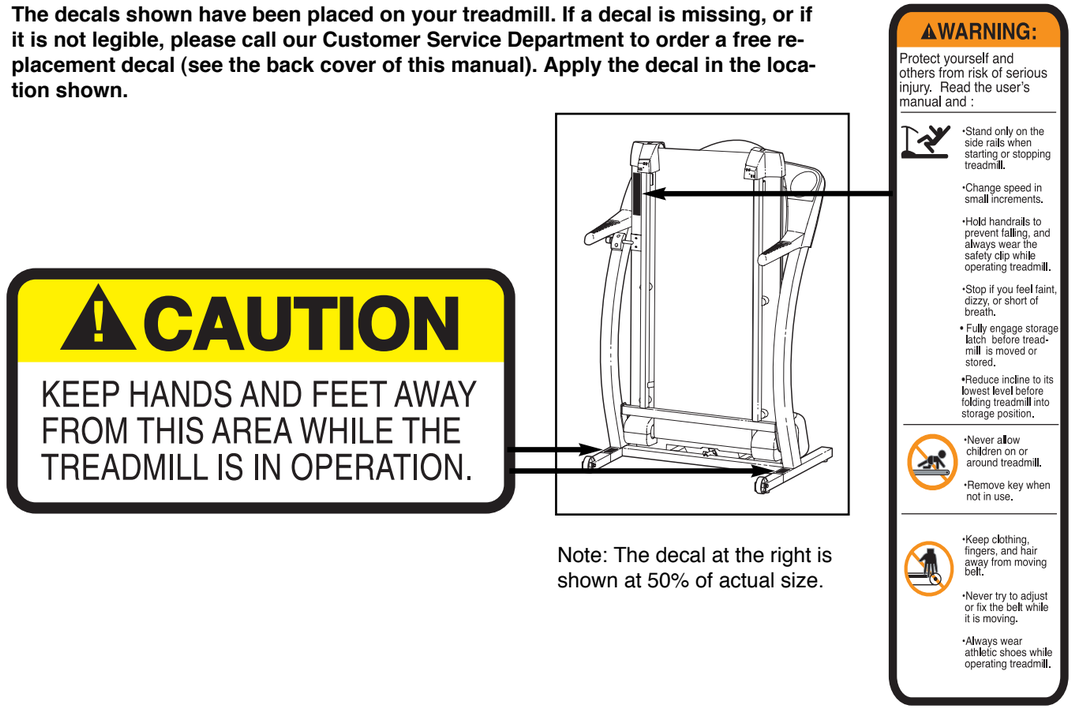

Note: The decal at the right is shown at 50% of actual size.

PROBLEM: The incline of the treadmill does not change correctly or does not change when iFIT.com CDs and videos are played

SOLUTION: a. With the key inserted in the console, press one of the incline buttons. **Whilst the incline is changing, remove the key.** After a few seconds, re-insert the key. The treadmill will automatically rise to the maximum incline level and then return to the minimum level. This will recalibrate the incline.

PROBLEM: The heart rate monitor does not function properly

SOLUTION: a. If the heart rate monitor does not function properly, refer to CHEST PULSE SENSOR TROUBLESHOOTING on page 8.

b. If the heart rate monitor still does not function properly, the battery should be changed. To replace the battery, locate the battery cover on the back of the sensor unit. Insert a coin into the slot in the cover and turn the cover counterclockwise to the "open" position. Remove the cover.

Next, remove the old battery from the sensor unit. Insert a new **CR 2032 battery**, making sure that the writing is on top. In addition, make sure that the rubber gasket is in place in the sensor unit. Replace the battery cover and turn it to the closed position.

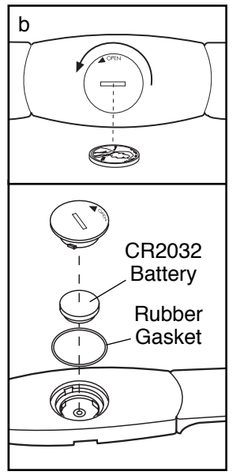

Locate the Reed Switch (18) and the Magnet (101) on the left side of the Pulley (78). Turn the Pulley until the Magnet is aligned with the Reed Switch. **Make sure that the gap between the Magnet and the Reed Switch is about 3 mm (1/8 in.).** If necessary, loosen the 3/4" Screw (24) and move the Reed Switch slightly. Retighten the Screw. Re-attach the hood, and run the treadmill for a few minutes to check for a correct speed reading.

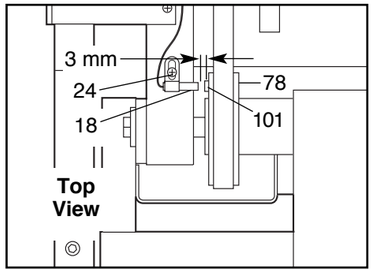

PROBLEM: The walking belt slows when walked on

SOLUTION: a. If an extension cord is needed, use only a 3-conductor, 1 mm^2 (14-gauge) cord that is no longer than 1.5 m (5 ft.).

b. If the walking belt is overtightened, treadmill performance may decrease and the walking belt may become damaged. Remove the key and **UNPLUG THE POWER CORD**. Using the allen wrench, turn both rear roller adjustment bolts counterclockwise, 1/4 of a turn. When the walking belt is properly tightened, you should be able to lift each side of the walking belt 8 to 10 cm (3 to 4 in.) off the walking platform. Be careful to keep the walking belt centred. Plug in the power cord, insert the key and run the treadmill for a few minutes. Repeat until the walking belt is properly tightened.

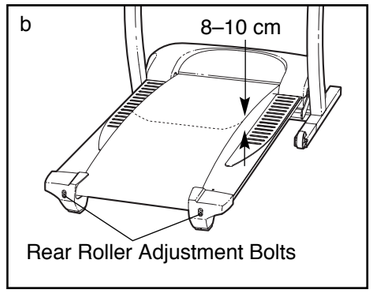

c. If the walking belt still slows when walked on, call our Customer Service Department, toll-free.

PROBLEM: The walking belt is off-centre or slips when walked on

SOLUTION: a. If the walking belt is off-centre, first remove the key and **UNPLUG THE POWER CORD**. **If the walking belt has shifted to the left,** use the allen wrench to turn the left rear roller bolt clockwise 1/2 of a turn; **if the walking belt has shifted to the right,** turn the left rear roller bolt counterclockwise 1/2 of a turn. Be careful not to overtighten the walking belt. Plug in the power cord, insert the key and run the treadmill for a few minutes. Repeat until the walking belt is centred.

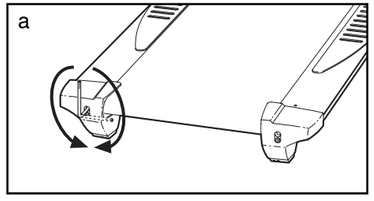

b. If the walking belt slips when walked on, first remove the key and **UNPLUG THE POWER CORD**. Using the allen wrench, turn both rear roller bolts clockwise, 1/4 of a turn. When the walking belt is correctly tightened, you should be able to lift each side of the walking belt 8 to 10 cm (3 to 4 in.) off the walking platform. Be careful to keep the walking belt centred. Plug in the power cord, insert the key and carefully walk on the treadmill for a few minutes. Repeat until the walking belt is properly tightened.

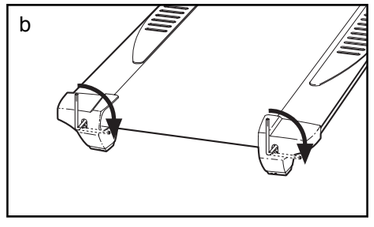

BEFORE YOU BEGIN

Congratulations for selecting the new PROFORM® 12.5 QM treadmill. The 12.5 QM treadmill combines advanced technology with innovative design to help you get the most from your exercise in the convenience and privacy of your home. And when you're not exercising, the unique 12.5 QM can be folded up, requiring less than half the floor space of other treadmills.

For your benefit, read this manual carefully before using the treadmill. If you have additional questions, please call our Customer Service Department at **08457 089 009**. To help us assist you, please note the product model number and serial number before calling. The model number of the treadmill is PETL62022. The serial number can be found on a decal attached to the treadmill (see the front cover of this manual for the location).

Before reading further, please review the drawing below and familiarise yourself with the parts that are labelled.

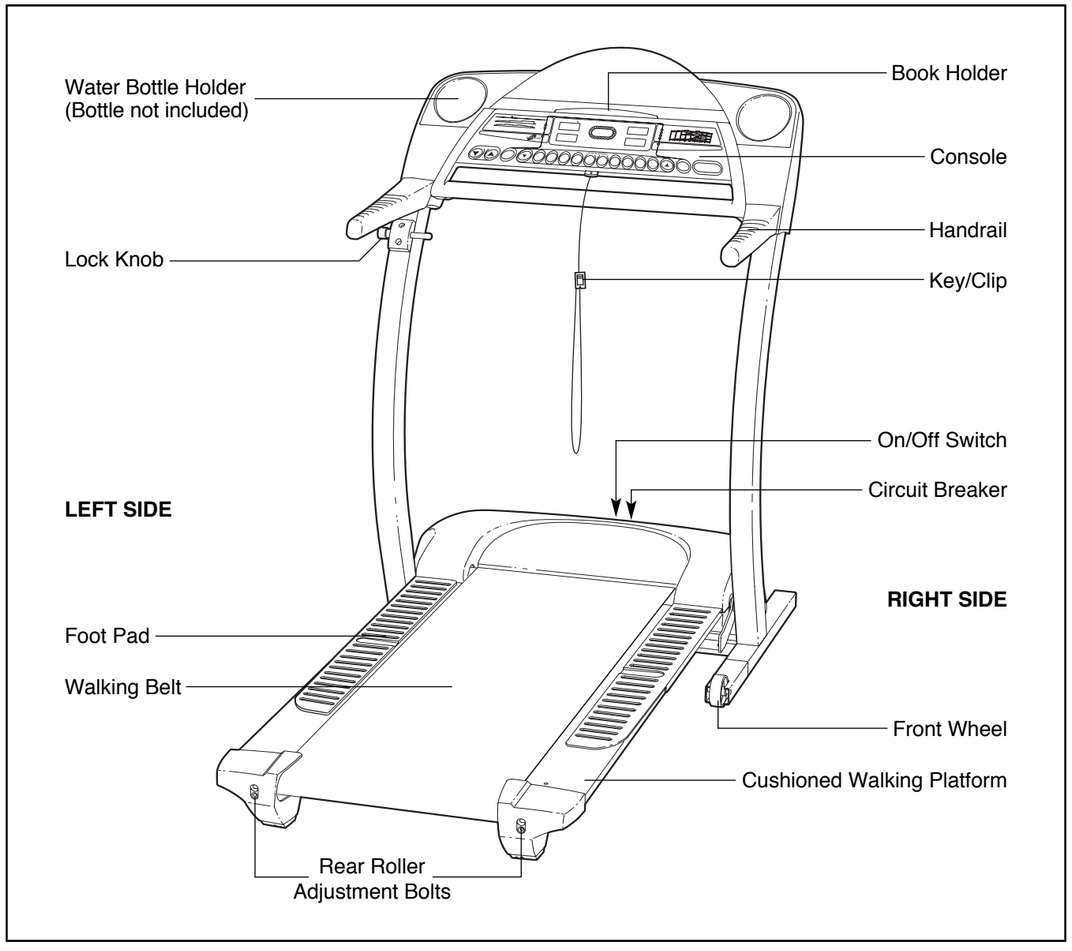

ASSEMBLY

Assembly requires two people. Set the treadmill in a cleared area and remove all packing materials. Do not dispose of the packing materials until assembly is completed. **Assembly requires your own Phillips screwdriver and rubber mallet .**

Note: The underside of the treadmill walking belt is coated with high-performance lubricant. During shipping, a small amount of lubricant may be transferred to the top of the walking belt or the shipping carton. This is a normal condition and does not affect treadmill performance. If there is lubricant on top of the walking belt, simply wipe off the lubricant with a soft cloth and a mild, non-abrasive cleaner.

⚠ WARNING: Do not plug in the power cord until the treadmill is completely assembled.

1. With the help of a second person, carefully raise the treadmill to the upright position as shown.

   Insert one of the Extension Legs (55) into the treadmill as shown. Make sure that the Extension Leg is turned so the Base Pad (44) is on the bottom. If necessary, tip the Uprights (64) forward as you insert the Extension Leg.

   Insert the other Extension Leg (not shown) in the same way.

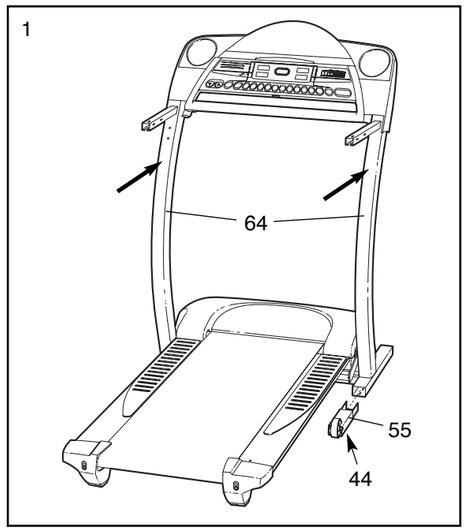

2. With the help of a second person, carefully lower the Uprights (64) as shown. Note: It may be helpful to place your foot on one of the Wheels (58) as you tip the Uprights. **Make sure that the Extension Legs (55) remain in the Uprights.**

   Attach each Extension Leg (55) with an Extension Screw (35), a Long Screw (109), and a Base Pad (44) as shown.

   Note: One replacement Base Pad (44) may be included. If a Base Pad becomes worn and needs to be replaced, use the replacement Base Pad.

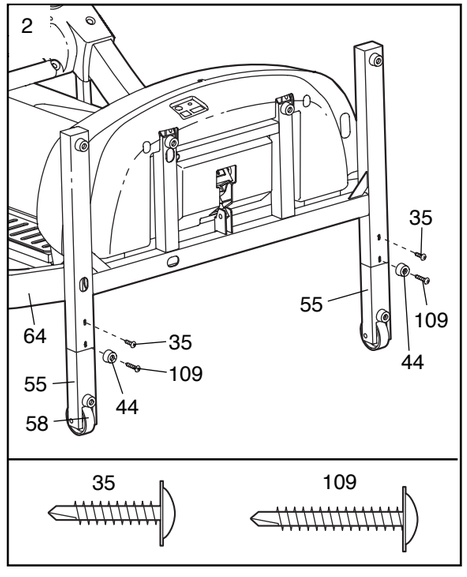

TROUBLESHOOTING

Most treadmill problems can be solved by following the steps below. Find the symptom that applies, and follow the steps listed. If further assistance is needed, please call our Customer Service Department.

PROBLEM: The power does not turn on

SOLUTION: a. Make sure that the power cord is plugged into a properly earthed outlet (see page 9). If an extension cord is needed, use only a 3-conductor, 1 mm^2 (14-gauge) cord that is no longer than 1.5 m (5 ft.). Important: The treadmill is not compatible with GFCI-equipped outlets.

b. After the power cord has been plugged in, make sure that the key is fully inserted into the console.

c. Check the circuit breaker located on the treadmill near the power cord. If the switch protrudes as shown, the circuit breaker has tripped. To reset the circuit breaker, wait for five minutes and then press the switch back in.

d. Check the on/off switch located on the treadmill near the power cord. The switch must be in the on position.

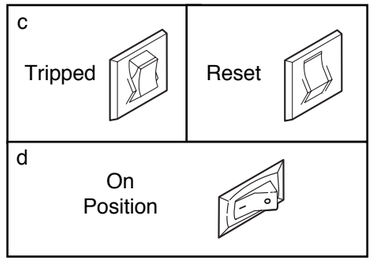

PROBLEM: The power turns off during use

SOLUTION: a. Check the circuit breaker located on the treadmill frame near the power cord (see c. above). If the circuit breaker has tripped, wait for five minutes and then press the switch back in.

b. Make sure that the power cord is plugged in. If the power cord is plugged in, unplug it, wait for five minutes, and then plug it back in.

c. Make sure that the on/off switch is in the on position.

d. If the treadmill still will not run, please call our Customer Service Department.

PROBLEM: The speed display on the console does not function properly

SOLUTION: a. Remove the key and **UNPLUG THE POWER CORD**. Carefully lower the Uprights (64) to the floor. Remove the three indicated Small Screws (37).

Raise the Uprights (64) to the vertical position. Pivot the Hood (1) off.

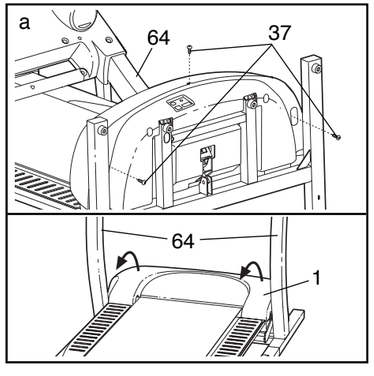

HOW TO FOLD AND MOVE THE TREADMILL

HOW TO FOLD THE TREADMILL FOR STORAGE

Before folding the treadmill, adjust the incline to the lowest position. If this is not done, the treadmill may be permanently damaged. Next, unplug the power cord. CAUTION: You must be able to safely lift 20 kg (45 lbs.) in order to raise, lower, or move the treadmill.

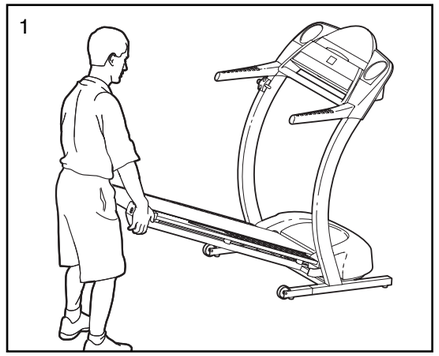

1. Hold the treadmill with your hands in the locations shown. **CAUTION: To decrease the possibility of injury, bend your legs and keep your back straight. As you raise the treadmill, lift with your legs rather than your back.** Raise the treadmill halfway to the vertical position.

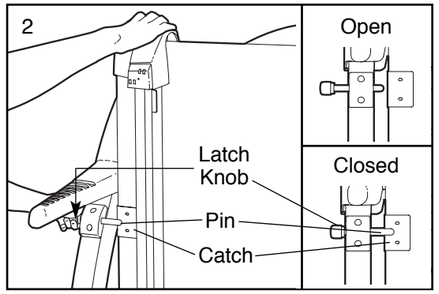

2. Move your right hand to the position shown and hold the treadmill firmly. Using your left hand, pull the latch knob to the left and hold it. Raise the treadmill until the catch is past the pin on the lock knob. Slowly release the latch knob. **Make sure that the catch is held securely by the pin.**

   To protect the floor or carpet from damage, place a mat under the treadmill. Keep the treadmill out of direct sunlight. Do not leave the treadmill in the storage position in temperatures above 30° C (85° F).

HOW TO MOVE THE TREADMILL

Before moving the treadmill, convert the treadmill to the storage position as described above. **Make sure that the catch is held securely by the pin on the lock knob.**

1. Hold the handrails and place one foot against a wheel.
2. Tilt the treadmill back until it rolls freely on the wheels. Carefully move the treadmill to the desired location. **Never move the treadmill without tipping it back. To reduce the risk of injury, use extreme caution whilst moving the treadmill. Do not attempt to move the treadmill over an uneven surface.**
3. Place one foot on a wheel, and carefully lower the treadmill until it is resting in the storage position.

HOW TO LOWER THE TREADMILL FOR USE

1. Refer to drawing 2 above. Hold the upper end of the treadmill with your right hand. Pull the latch knob to the left and hold it. Pivot the treadmill down until the frame is past the pin. Slowly release the latch knob.
2. Refer to drawing 1 above. Hold the treadmill firmly with both hands, and **slowly** lower the treadmill to the floor. **CAUTION: To decrease the possibility of injury, bend your legs and keep your back straight.**

3. With the help of a second person, carefully tip the Uprights (64) back to the vertical position.

   Attach the Latch Assembly (32) to the left Upright (64) with two Extension Screws (35).

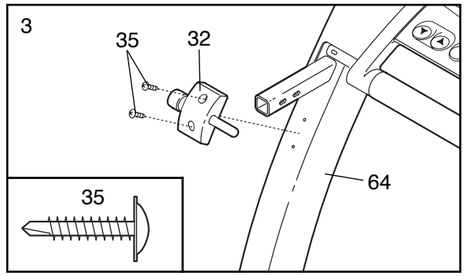

4. Orient one of the Handgrip Extensions (34) as shown and insert it as far as possible into the post on the left Upright (64). If necessary, tap the Handgrip Extension with a rubber mallet to fully insert it. Attach the Handgrip Extension with **two** Extension Screws (35), one towards the front of the post, and the other towards the back.

   Attach the other Handgrip Extension to the post on the right Upright (not shown) in the same way.

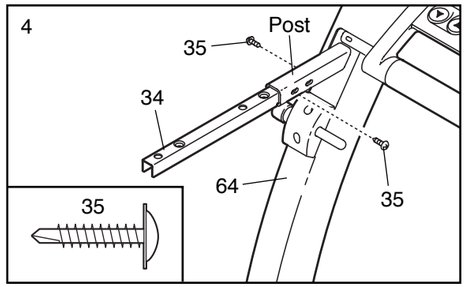

5. See the inset drawing. Identify the Left Top Handgrip (31) (there are identifying marks inside the Handgrips). Set the Left Top Handgrip on the left Handgrip Extension (34). Insert two 1/2" Screws (9) **into the two holes in the Handgrip Extension indicated by the arrows. Tighten the Screws into the Left Top Handgrip.**

   Important: Do not insert the two 1/2" Screws (9) into the wrong holes in the Handgrip Extension (34), or tighten the Screws into the plastic bosses on the bottom of the Left Top Handgrip (31).

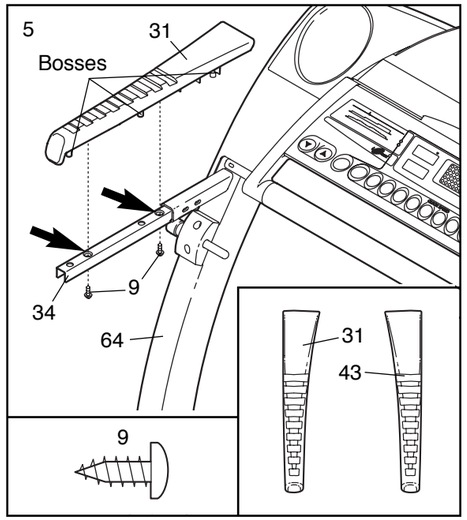

6. Attach the matching Left Bottom Handgrip (112) with three 1/2" Screws (9).

   Attach the Right Top Handgrip and the Right Bottom Handgrip (not shown) as described above.

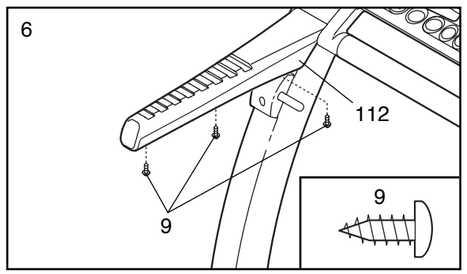

7. **Make sure that all parts are properly tightened before you use the treadmill.** Keep the included allen wrench in a secure place; the allen wrench is used to adjust the walking belt (see page 24). To protect the floor or carpet from damage, place a mat under the treadmill.

HOW TO USE THE CHEST PULSE SENSOR

HOW TO PUT ON THE CHEST PULSE SENSOR

The chest pulse sensor consists of two components: the chest strap and the sensor unit (see the drawing below). Insert the tab on one end of the chest strap into one end of the sensor unit, as shown in the inset drawing. Press the end of the sensor unit under the buckle on the chest strap. The tab should be flush with the front of the sensor unit.

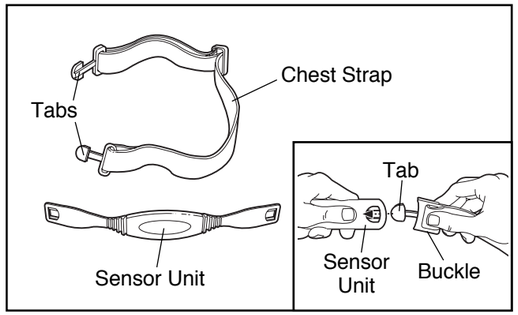

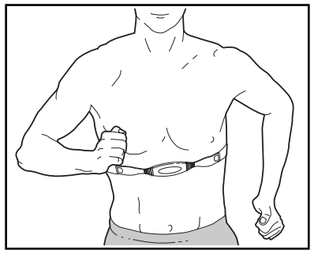

Next, wrap the chest pulse sensor around your chest and attach the other end of the chest strap to the sensor unit. Adjust the length of the chest strap, if necessary. The chest pulse sensor should be under your clothes, tight against your skin, and as high under the pectoral muscles or breasts as is comfortable. Make sure that the logo on the sensor unit is facing forward and is right-side-up.

Pull the sensor unit away from your body a few inches and locate the two electrode areas on the inner side (the electrode areas are covered by shallow ridges). Using saline solution such as saliva or contact lens solution, wet both electrode areas. Return the sensor unit to a position against your chest.

CHEST PULSE SENSOR CARE AND MAINTENANCE

- Thoroughly dry the chest pulse sensor after each use. The chest pulse sensor is activated when the electrode areas are wetted and the heart rate monitor is put on; the chest pulse sensor shuts off when it is removed and the electrode areas are dried. If the chest pulse sensor is not dried after each use, it may remain activated longer than necessary, draining the battery prematurely.
- Store the chest pulse sensor in a warm, dry place. Do not store the chest pulse sensor in a plastic bag or other container that may trap moisture.
- Do not expose the chest pulse sensor to direct sunlight for extended periods of time; do not expose it to temperatures above 50° C (122° F) or below -10° C (14° F) .
- Do not excessively bend or stretch the sensor unit when using or storing the chest pulse sensor.
- Clean the sensor unit using a damp cloth—never use alcohol, abrasives, or chemicals. The chest strap may be hand washed and air dried.

CHEST PULSE SENSOR TROUBLESHOOTING

The instructions on the following pages explain how the chest pulse sensor is used with the console. If the chest pulse sensor does not function properly, try the steps below.

- Make sure that you are wearing the chest pulse sensor as described at the left. Note: If the chest pulse sensor does not function when positioned as described, move it slightly lower or higher.
- Use saline solution such as saliva or contact lens solution to wet the two electrode areas on the sensor unit. If heart rate readings do not appear until you begin perspiring, re-wet the electrode areas.
- As you walk or run on the treadmill, position yourself near the centre of the walking belt. **For the console to display heart rate readings, the user must be within arm's length of the console.**
- The chest pulse sensor is designed to work with people who have normal heart rhythms. Heart rate reading problems may be caused by medical conditions such as premature ventricular contractions (pvcs), tachycardia bursts, and arrhythmia.
- The operation of the chest pulse sensor can be affected by magnetic interference caused by high power lines or other sources. If it is suspected that this is a problem, try relocating the treadmill.
- The CR2032 battery may need to be replaced (see page 25).

THE INFORMATION MODE/DEMO MODE

The console features an information mode that keeps track of the total number of hours that the treadmill has been operated and the total number of miles that the walking belt has moved. The information mode also allows you to switch the console from kilometres per hour to miles per hour. In addition, the information mode allows you to turn on and turn off the demo mode.

To select the information mode, hold down the Stop button whilst inserting the key into the console. When the information mode is selected, the following information will be shown:

The time/incline display will show the total number of hours the treadmill has been used.

The distance/laps display will show the total number of miles (or kilometres) that the walking belt has moved.

An E for English miles or an M for metric kilometres will appear in the speed/pace display. Press the speed △ button to change the unit of measurement.

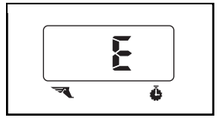

IMPORTANT: The calories/watts/heart rate display should be blank. If a "d" appears in the display, the console is in the "demo" mode. This mode is intended to be used only when a treadmill is displayed in a store. When the console is in the demo mode, the power cord can be plugged in, the key can be removed from the console, and the displays and indicators on the console will automatically light in a preset sequence, although the buttons on the console will not operate. **If a "d" appears in the calories/watts/heart rate display when the information mode is selected, press the speed ▽ button so the display is blank.**

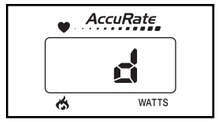

To exit the information mode, remove the key from the console.

HOW TO USE PROGRAMS DIRECTLY FROM OUR WEB SITE

Our Web site at www.iFIT.com allows you to access basic programs, audio programs, and video programs directly from the internet. See www.iFIT.com for details.

To use programs from our Web site, the treadmill must be connected to your home computer. See HOW TO CONNECT YOUR COMPUTER on page 17. In addition, you must have an internet connection and an internet service provider. A list of specific system requirements will be found on our Web site.

Follow the steps below to use a program from our Web site.

1 Insert the key into the console.

See HOW TO TURN ON THE POWER on page 11.

2 Select the iFIT.com mode.

When the key is inserted, the manual mode will be selected. To use a program from our Web site, press the mode button repeatedly until the iFIT.com indicator lights.

3 Go to your computer and start an internet connection.

4 Start your web browser, if necessary, and go to our Web site at www.iFIT.com.

5 Follow the desired links on our Web site to select a program.

Read and follow the on-line instructions for using a program.

6 Follow the on-line instructions to start the program.

When you start the program, an on-screen countdown will begin.

7 Return to the treadmill and stand on the foot pads. Find the clip attached to the key and slide the clip onto the waistband of your clothes.

When the on-screen countdown ends, the program will begin and the walking belt will begin to move. Hold the handrails, step onto the walking belt, and begin walking. During the program, an electronic "chirping" sound will alert you when the speed and/or incline of the treadmill is about to change. **CAUTION: Always listen for the "chirp" and be prepared for speed and/or incline changes.**

If the speed or incline settings are too high or too low, you can manually override the settings at any time by pressing the speed or incline buttons on the console. **However, when the next "chirp" is heard, the speed and/or incline will change to the next settings for the program.**

To stop the walking belt at any time, press the stop button on the console. The time/incline display will begin to flash. To restart the program, press the start button or the speed △ button. After a moment, the walking belt will begin to move at 1 mph. **When the next "chirp" is heard, the speed and incline will change to the next settings of the program**.

When the program is completed, the walking belt will stop and the time/incline display will begin to flash. Note: To use another program, press the stop button and go to step 5.

Note: If the speed or incline of the treadmill does not change when a "chirp" is heard, make sure that the iFIT.com indicator is lit and that the time/incline display is not flashing. In addition, make sure that the audio cable is properly connected, that it is fully plugged in, and that it is not wrapped around a power cord.

8 Follow your progress with the LED track and the four displays.

See step 5 on page 11.

9 When the program has ended, remove the key.

See step 5 on page 13.

OPERATION AND ADJUSTMENT

THE PERFORMANT LUBE™ WALKING BELT

Your treadmill features a walking belt coated with PERFORMANT LUBE™, a high-performance lubricant. **IMPORTANT: Never apply silicone spray or other substances to the walking belt or the walking platform. Such substances will deteriorate the walking belt and cause excessive wear.**

HOW TO PLUG IN THE POWER CORD

This product must be earthed. If it should malfunction or break down, earthing provides a path of least resistance for electric current to reduce the risk of electric shock. This product is equipped with a cord having an equipment-earthing conductor and an earthing plug.

Two power cords are included. Select the one that will fit your outlet. Refer to drawing 1. Plug the indicated end of the power cord into the socket on the treadmill. Next, lift the tab on the ferrite box and clamp the ferrite box around the power cord. The ferrite box should not be allowed to slide along the power cord. Fasten the included plastic tie just behind the ferrite box and cut off the excess plastic tie. Refer to drawing 2. Plug the power cord into an appropriate outlet that is properly installed and earthed in accordance with all local codes and ordinances.

If the power cord is damaged, it must be replaced with a manufacturer-recommended power cord.

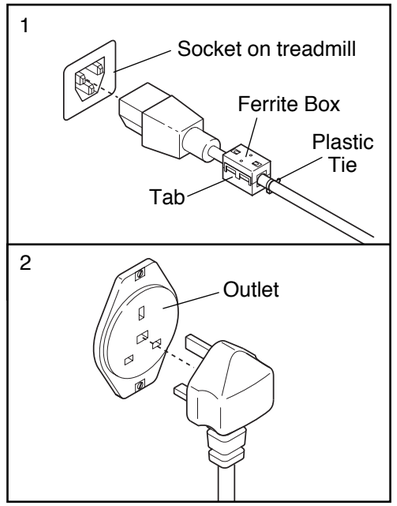

⚠DANGER: Improper connection of the equipment-earthing conductor can result in an increased risk of electric shock. Check with a qualified electrician or serviceman if you are in doubt as to whether the product is properly earthed. Do not modify the plug provided with the product—if it will not fit the outlet, have a proper outlet installed by a qualified electrician.

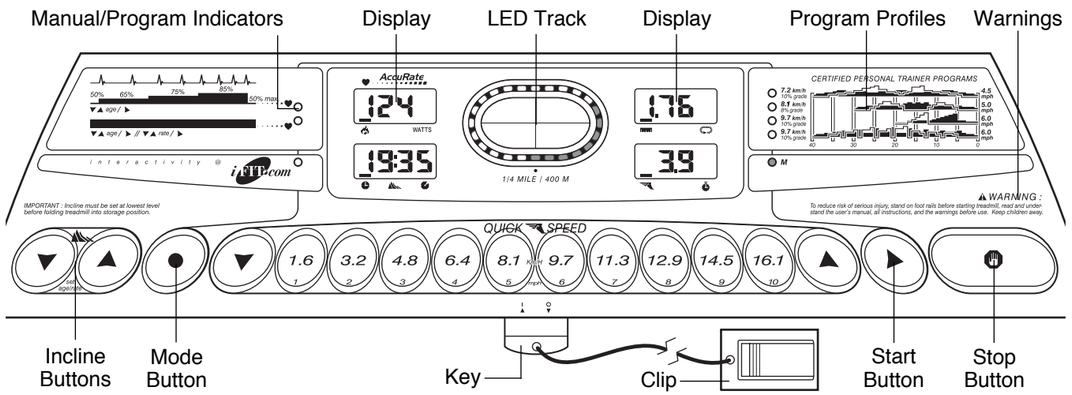

⚠ CAUTION: Before operating the console, read the following precautions.

- **Do not stand on the walking belt when turning on the power.**
- **Always wear the clip (see the drawing above) whilst operating the treadmill.**
- **Adjust the speed in small increments to avoid sudden jumps in speed.**
- **To reduce the possibility of electric shock, keep the console dry. Avoid spilling liquids on the console and place only a sealed water bottle in the water bottle holder.**

FEATURES OF THE CONSOLE

The advanced console is designed to help you get the most from your exercise. When the manual mode of the console is selected, the speed and incline of the treadmill can be changed with a touch of a button. As you exercise, the console will display continuous exercise feedback. You can even measure your heart rate using the chest pulse sensor.

Four certified personal trainer programs are also offered. Each program automatically controls the speed and incline of the treadmill to give you an effective workout. Two heart rate programs are also featured. Each program automatically controls the treadmill to keep your heart rate near a target level during your workouts.

The console also features new iFIT.com interactive technology. IFIT.com technology is like having a personal trainer right in your home. Using the included audio cable, you can connect the treadmill to your home stereo, portable stereo, or computer and play special iFIT.com CD programs (iFIT.com CDs are available separately). IFIT.com CD programs automatically control the speed and incline of the treadmill as a personal trainer guides you through every step of your workout. High-energy music provides added motivation. Each CD features two programs designed by certified personal trainers.

In addition, you can connect the treadmill to your VCR and TV and play iFIT.com video programs (videocassettes are available separately). Video programs offer the same benefits as iFIT.com CD programs, but add the excitement of working out with a class and an instructor—the hottest new trend at health clubs.

With the treadmill connected to your computer, you can also go to our Web site at www.iFIT.com and access basic programs, audio programs, and video programs directly from the internet. See www.iFIT.com for details.

For information about iFIT.com CD's or videocassettes, send an e-mail to workouts@iFIT.com.

To use the manual mode of the console, follow the steps beginning on page 11. **To use a personal trainer program**, see page 13. **To use a heart rate program**, see page 14. **To use an iFIT.com CD or video program**, refer to page 18. **To use an iFIT.com program directly from our Web site**, see page 20.

If the speed or incline settings are too high or too low, you can manually override the settings at any time by pressing the speed or incline buttons on the console. However, **when the next "chirp" is heard, the speed and/or incline will change to the next settings of the CD or video program.**

To stop the walking belt at any time, press the Stop button on the console. The time/incline display will begin to flash. To restart the program, press the start button or the speed △ button. After a moment, the walking belt will begin to move at 1 mph. **When the next "chirp" is heard, the speed and incline will change to the next settings of the CD or video program**.

When the CD or video program is completed, the walking belt will stop and the time/incline display will begin to flash. Note: To use another CD or video program, press the stop button or remove the key and go to step 1 on page 18.

Note: If the speed or incline of the treadmill does not change when a "chirp" is heard:

- **Make sure that the iFIT.com indicator is lit and that the time/incline display is not flashing. If the time/incline display is flashing, press the start button or the speed △ button on the console.**
- **Adjust the volume of your CD player or VCR. If the volume is too high or too low, the console may not detect the program signals.**
- **Make sure that the audio cable is properly connected, that it is fully plugged in, and that it is not wrapped around a power cord.**
- **If you are using your portable CD player and the CD skips, set the CD player on the floor or another flat surface instead of on the console.**
- **See the instructions near the top of page 25.**

5 Follow your progress with the LED track and the four displays.

See step 5 on page 11.

6 When the program is completed, remove the key.

See step 5 on page 13.

CAUTION: Always remove iFIT.com CDs and videocassettes from your CD player or VCR when you are finished using them.

HOW TO CONNECT YOUR VCR

Note: If your VCR has an unused AUDIO OUT jack, see instruction A below. If the AUDIO OUT jack is being used, see instruction B. If you have a TV with a built-in VCR, see instruction B. If your VCR is connected to your home stereo, see HOW TO CONNECT YOUR HOME STEREO on page 17.

A. Plug one end of the audio cable into the jack on the front of the treadmill near the power cord. Plug the other end of the cable into the included Adaptor. Plug the Adaptor into the AUDIO OUT jack on your VCR.

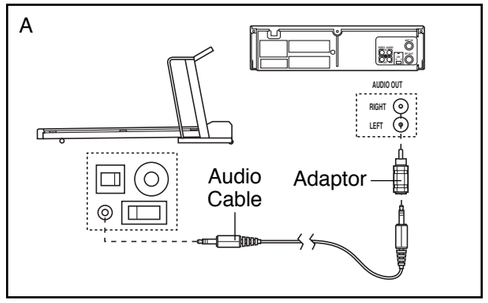

B. Plug one end of the audio cable into the jack on the front of the treadmill near the power cord. Plug the other end of the cable into the included Adaptor. Plug the Adaptor into an RCA Y-adaptor (available at electronics stores). Next, remove the wire that is currently plugged into the AUDIO OUT jack on your VCR and plug the wire into the unused side of the Y-adaptor. Plug the Y-adaptor into the AUDIO OUT jack on your VCR.

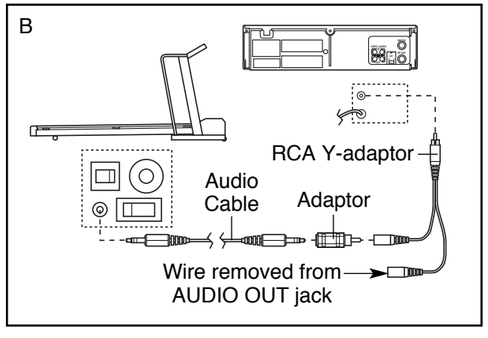

HOW TO USE IFIT.COM CD AND VIDEO PROGRAMS

To use iFIT.com CDs or videocassettes, the treadmill must be connected to your portable CD player, portable stereo, home stereo, computer with CD player, or VCR. See HOW TO CONNECT THE TREADMILL TO YOUR CD PLAYER, VCR, OR COMPUTER on page 16. **For information about iFIT.com CD's or videocassettes, send an e-mail to workouts@iFIT.com.**

Follow the steps below to use an iFIT.com CD or video program.

1 Insert the key into the console.

See HOW TO TURN ON THE POWER on page 11.

2 Select the iFIT.com mode.

When the key is inserted, the manual mode will be selected. To use iFIT.com CDs or videocassettes, press the mode button repeatedly until the iFIT.com indicator lights.

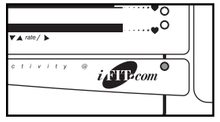

3 Insert the iFIT.com CD or videocassette.

If you are using an iFIT.com CD, insert the CD into your CD player. If you are using an iFIT.com videocassette, insert the videocassette into your VCR.

4 Press the PLAY button on your CD player or VCR.

A moment after the button is pressed, your personal trainer will begin guiding you through your workout. Simply follow your personal trainer's instructions. Note: If the time/incline display is flashing, press the start button or the speed △ button on the console. The treadmill will not respond to a CD or video program when the time/incline display is flashing.

During the CD or video program, an electronic "chirping" sound will alert you when the speed and/or incline of the treadmill is about to change. **CAUTION: Always listen for the "chirp" and be prepared for speed and/or incline changes. In some instances, the speed and/or incline may change before the personal trainer describes the change.**

HOW TO TURN ON THE POWER

1 Plug in the power cord (see page 9).

2 Locate the on/off switch near the power cord. Move the on/off switch to the on position.

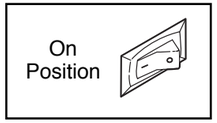

3 Stand on the foot pads of the treadmill. Find the clip attached to the key (see the drawing on page 10) and slide the clip onto the waistband of your clothes. Next, insert the key into the console. The displays and various indicators will light. **Test the clip by carefully taking a few steps backward until the key is pulled from the console. If the key is not pulled from the console, adjust the position of the clip.**

HOW TO USE THE MANUAL MODE

1 Insert the key fully into the console.

See HOW TO TURN ON THE POWER above.

2 Select the manual mode.

When the key is inserted, the manual mode will be selected and the manual (M) indicator will light. If a program has been selected, press the mode button repeatedly to reselect the manual mode.

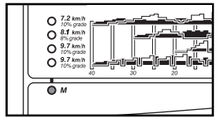

3 Press the start button or the speed △ button to start the walking belt.

A moment after the button is pressed, the walking belt will begin to move at 1 mph. Hold the handrails and begin walking. As you exercise, change the speed of the walking belt as desired by pressing the speed ▽ and △ buttons.

Each time a button is pressed, the speed setting will change by 0.1 mph; if a button is held down, the speed setting will change in increments of 0.5 mph. To change the speed setting quickly, press the Quick Speed buttons. **Note: The console can display speed and distance in either miles or kilometres. For simplicity, all instructions in this section refer to miles.**

To stop the walking belt, press the stop button. The time/incline display will begin to flash. To restart the walking belt, press the start button or the speed △ button.

During the first few minutes that the treadmill is used, inspect the alignment of the walking belt, and align the walking belt if necessary (see page 24).

4 Change the incline of the treadmill as desired.

To change the incline of the treadmill, press the incline buttons. Each time a button is pressed, the incline will change by 0.5%. Note: After the buttons are pressed, it may take a moment for the treadmill to reach the selected incline setting.

5 Follow your progress with the LED track and the four displays.

The LED track—The track in the centre of the console represents 1/4 mile. As you exercise, the indicators around the track will light in sequence until you have completed 1/4 mile. A new lap will then begin.

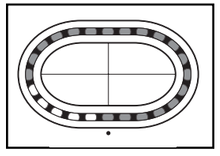

The calories/watts/heart rate display—This display shows the approximate number of calories you have burned and your power output in watts. The display will change from one number to the other every few seconds, as shown by the indicators in the display. When you are wearing the chest pulse sensor, this display will also show your heart rate.

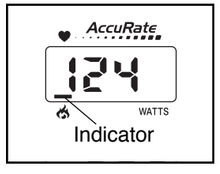

The time/incline display—When the manual mode or the iFIT.com mode is selected, this display will show the elapsed time and the incline level of the treadmill. The display will change from one number to the other every few seconds, as shown by the indicators in the display. When a personal trainer program or a heart rate program is selected, the display will show the time remaining in the program, the time remaining in the current segment of the program, and the incline level. Note: Each time the incline changes, the display will show the current incline setting for several seconds.

The distance/laps display—This display shows the distance that you have walked and the number of 1/4-mile laps you have completed. The display will change from one number to the other every few seconds, as shown by the indicators in the display.

The speed/pace display—This display shows the speed of the walking belt and your current pace (pace is measured in minutes per mile). The display will change from one number to the other every few seconds, as shown by the indicators in the display. Note: Each time the speed changes, the display will show the current speed setting for several seconds.

Note: The console can display speed and distance in either miles or kilometres. To find which unit of measurement is selected, hold down the stop button whilst inserting the key into the console. An E for English miles or an M for metric kilometres will appear in the display. Press the speed △ button to change the unit of measurement. When the desired unit of measurement is selected, remove the key and then reinsert it.

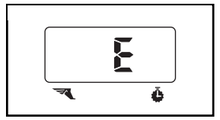

To reset the displays at any time, press the stop button, remove the key, and then reinsert the key.

6 When you are finished exercising, remove the key.

Step onto the foot pads, press the stop button, and **adjust the incline of the treadmill to the lowest setting. The incline must be at the lowest setting when the treadmill is folded to the storage position or the treadmill will be damaged.** Next, remove the key from the console and put it in a secure place. **Note: If the displays and various indicators on the console remain lit after the key is removed, the console is in the "demo" mode. See page 21 and turn off the demo mode.**

When you are finished using the treadmill, move the on/off switch near the power cord to the off position and unplug the power cord.

HOW TO CONNECT YOUR HOME STEREO

Note: If your stereo has an unused LINE OUT jack, see instruction A below. If the LINE OUT jack is being used, see instruction B.

A. Plug one end of the audio cable into the jack on the front of the treadmill near the power cord. Plug the other end of the cable into the adaptor. Plug the adaptor into the LINE OUT jack on your stereo.

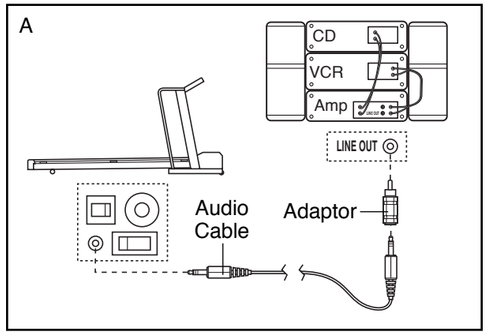

B. Plug one end of the audio cable into the jack on the front of the treadmill near the power cord. Plug the other end of the cable into the adaptor. Plug the adaptor into an RCA Y-adaptor (available at electronics stores). Next, remove the wire that is currently plugged into the LINE OUT jack on your stereo and plug the wire into the unused side of the Y-adaptor. Plug the Y-adaptor into the LINE OUT jack on your stereo.

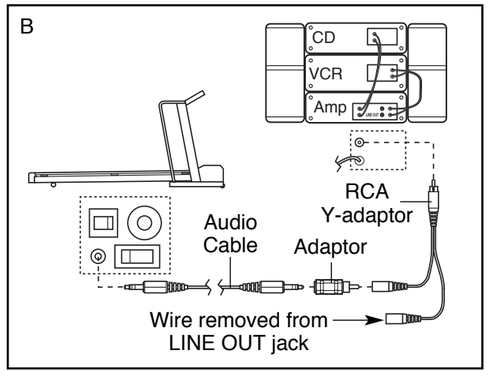

HOW TO CONNECT YOUR COMPUTER

Note: If your computer has a 3.5mm LINE OUT jack, see instruction A. If your computer has only a PHONES jack, see instruction B.

A. Plug one end of the audio cable into the jack on the front of the treadmill near the power cord. Plug the other end of the cable into the LINE OUT jack on your computer.

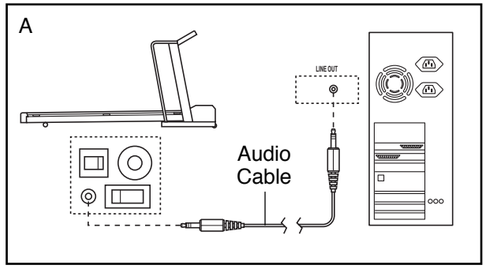

B. Plug one end of the audio cable into the jack on the front of the treadmill near the power cord. Plug the other end of the cable into the splitter. Plug the splitter into the PHONES jack on your computer. Plug your headphones or speakers into the other side of the splitter.

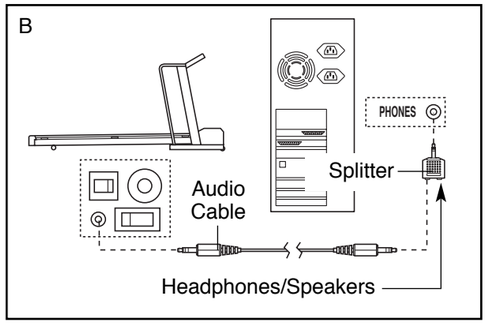

HOW TO CONNECT THE TREADMILL TO YOUR CD PLAYER, VCR, OR COMPUTER

To use iFIT.com CDs, the treadmill must be connected to your portable CD player, portable stereo, home stereo, or computer with CD player. See pages 16 and 17 for connecting instructions. **To use iFIT.com videocassettes**, the treadmill must be connected to your VCR. See page 18 for connecting instructions. **To use iFIT.com programs directly from our internet site**, the treadmill must be connected to your home computer. See page 17 for connecting instructions.

HOW TO CONNECT YOUR PORTABLE CD PLAYER

Note: If your CD player has separate LINE OUT and PHONES jacks, see instruction A below. If your CD player has only one jack, see instruction B.

A. Plug one end of the audio cable into the jack on the front of the treadmill near the power cord. Plug the other end of the cable into the LINE OUT jack on your CD player. Plug your headphones into the PHONES jack.

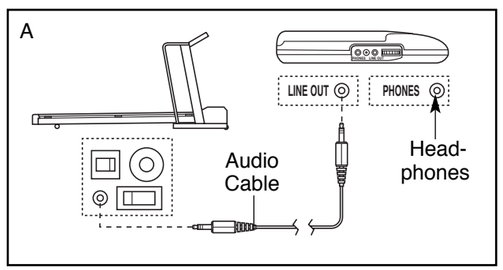

B. Plug one end of the audio cable into the jack on the front of the treadmill near the power cord. Plug the other end of the cable into the splitter. Plug the splitter into the PHONES jack on your CD player. Plug your headphones into the other side of the splitter.

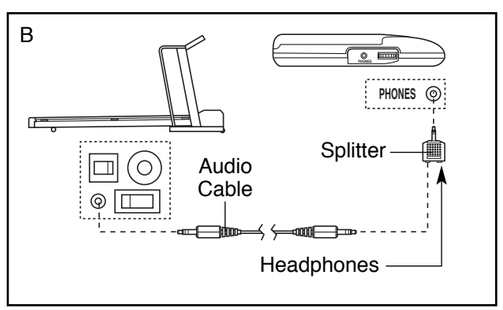

HOW TO CONNECT YOUR PORTABLE STEREO

Note: If your stereo has an RCA-type AUDIO OUT jack, see instruction A below. If your stereo has a 3.5mm LINE OUT jack, see instruction B. If your stereo has only a PHONES jack, see instruction C.

A. Plug one end of the audio cable into the jack on the front of the treadmill near the power cord. Plug the other end of the cable into the adaptor. Plug the adaptor into an AUDIO OUT jack on your stereo.

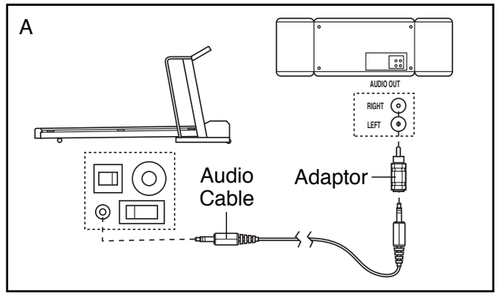

B. Plug one end of the audio cable into the jack on the front of the treadmill near the power cord. Plug the other end of the cable into the LINE OUT jack on your stereo.

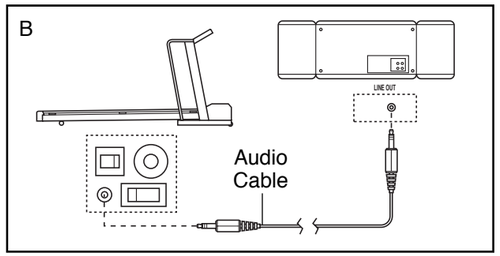

C. Plug one end of the audio cable into the jack on the front of the treadmill near the power cord. Plug the other end of the cable into the splitter. Plug the splitter into the PHONES jack on your stereo. Plug your headphones into the other side of the splitter.

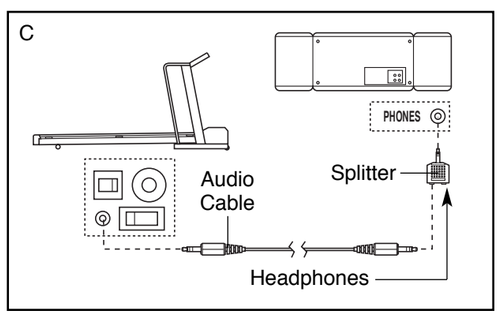

HOW TO USE PERSONAL TRAINER PROGRAMS

1 Insert the key fully into the console.

See HOW TO TURN ON THE POWER on page 11.

2 Select one of the personal trainer programs.

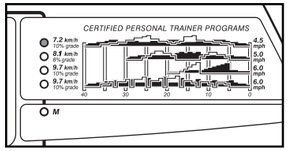

When the key is inserted, the manual mode will be selected. To select one of the personal trainer programs, press the mode button repeatedly until one of the four personal trainer program indicators lights.

When a personal trainer program is selected, the time/incline display will flash the maximum incline setting for the program for six seconds, and the speed/pace display will flash the maximum speed setting. After a few seconds, the time/incline display will show how long the selected program will last.

The four profiles on the right side of the console show how the speed and incline of the treadmill will change during the programs. The numbers beside the profiles show the maximum speed and incline settings for the programs.

3 Press the start button or the speed △ button to start the program.

A moment after the button is pressed, the treadmill will automatically adjust to the first speed and incline settings for the program. Hold the handrails and begin walking.

Each program is divided into several time segments of different lengths. The time/incline display will show both the time remaining in the program and the time remaining in the current segment of the program. One speed setting and one incline setting are programmed for each segment. (The same speed setting and/or incline setting may be programmed for consecutive segments.)

When only three seconds remain in the first segment of the program, a series of tones will sound. In addition, if the speed and/or incline of the treadmill is about to change, the speed/pace display and/or the time/incline display will flash to alert you. When the first segment is completed, the treadmill will automatically adjust to the speed and incline settings for the second segment.

The program will continue in this way until no time remains in the time/incline display. The walking belt will then slow to a stop.

If the speed or incline setting for the current segment is too high or too low, you can manually override the setting by pressing the speed or incline buttons. However, **when the current segment of the program ends, the treadmill will automatically adjust to the speed and incline settings for the next segment.**

To stop the program temporarily, press the stop button. The time/incline display will begin to flash. To restart the program, press the start button or the speed △ button. To end the program, press the stop button, remove the key, and then reinsert the key.

4 Follow your progress with the LED track and the four displays.

Refer to step 5 on page 11.

5 When the program is completed, remove the key.

When the program is completed, **make sure that the treadmill is at the lowest incline level.** Next, remove the key from the console and put it in a secure place. **Note: If the displays and indicators on the console remain lit after the key is removed, the console is in the "demo" mode. Refer to page 14 and turn off the demo mode.**

When you are finished using the treadmill, move the on/off switch near the power cord to the off position.

HOW TO USE HEART RATE PROGRAMS

⚠ CAUTION: If you have heart problems, or if you are over 60 years of age and have been inactive, do not use the heart rate programs. If you are taking medication regularly, consult your physician to find whether the medication will affect your exercise heart rate.

Follow the steps below to use the heart rate programs.
Note: You must wear the chest pulse sensor to use the heart rate programs.

1 Put on the chest pulse sensor.

Refer to the instructions on page 8.

2 Insert the key fully into the console.

See HOW TO TURN ON THE POWER on page 11.

3 Select a heart rate program.

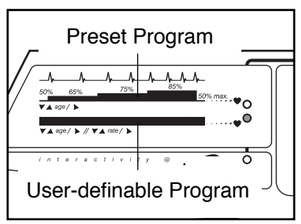

When the key is inserted, the manual mode will be selected. To select one of the heart rate programs, press the mode button repeatedly until one of the two heart rate program indicators lights. When the lower indicator is lit, the user-definable heart rate program is selected. When the upper indicator is lit, the preset heart rate program is selected.

The two profiles on the left side of the console show the target heart rate settings for the programs. The numbers above the upper profile are percentages of your estimated maximum heart rate. Note: Your estimated maximum heart rate is determined by subtracting your age from 220. For example, if you are 30 years old, your estimated maximum heart rate is 190 beats per minute (220 – 30 = 190).

The user-definable program will last for 40 minutes. The preset program will last for 20 minutes.

4 Enter your age.

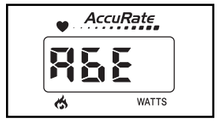

When a heart rate program is selected, the letters AGE and the current age setting will begin to flash in the calories/watts/heart rate display. You must enter your age to use a heart rate program. If you have not entered your age, press the incline buttons to enter your age. Your age will then be saved in memory.

If the user-definable program is selected, go to step 5. If the preset program is selected, go to step 6.

5 Enter a target heart rate setting.

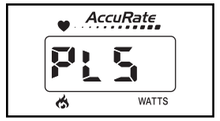

Press the start button (pressing the button will not start the program at this time). The letters PLS and the target heart rate setting for the program, in beats per minute, will be shown in the calories/watts/heart rate display.

If desired, you can change the target heart rate setting by pressing the incline buttons. The buttons can be held down to change the target heart rate setting quickly. The target heart rate setting can be from 50% to 85% of your estimated maximum heart rate. For example, if you are 30 years old, the target heart rate setting can be from 95 to 161 beats per minute. (If you are 30 years old, your estimated maximum heart rate is 190. 50% of 190 is 95. 85% of 190 is 161.)

6 Adjust the maximum speed limit for the program.

When a heart rate program is selected, the letters SPd (speed) and the maximum speed limit for the program will flash in the speed/pace display. If desired, change the maximum speed limit by pressing the Quick Speed buttons.

7 Press the start button or the speed △ button to start the program.

A moment after the button is pressed, the treadmill will automatically adjust to the first speed setting for the program. Hold the handrails and begin walking.

If the user-definable program is selected, the time/incline display will show the elapsed time. If the preset program is selected, the time/incline display will show the time remaining in the program and the time remaining in the current segment of the program.

During the program, the console will regularly compare your heart rate to the current target heart rate setting. If your heart rate is too far below or above the target heart rate setting, the speed of the treadmill will automatically increase or decrease to bring your heart rate closer to the target heart rate setting. If the speed reaches the maximum speed limit for the program (see step 6 on page 14) and your heart rate is still too far below the current target heart rate setting, the incline of the treadmill will also increase to bring your heart rate closer to the target heart rate setting.

The program will continue until no time remains in the program. The walking belt will then slow to a stop.

If the speed or incline setting is too high or too low, you can adjust the setting with the speed or incline buttons. However, each time the console compares your heart rate to the current target heart rate setting, the speed and/or incline of the treadmill may automatically increase or decrease to bring your heart rate closer to the target heart rate setting.

If your pulse is not detected during the program, the letters PLS will flash in the calories/watts/heart rate display and the speed and incline of the treadmill may automatically decrease until your pulse is detected. If this occurs, refer to the instructions on page 8.

To stop the program at any time, press the stop button. Heart rate programs should not be stopped temporarily and then restarted. To use a heart rate program again, reselect the program and start it at the beginning.

8 Follow your progress with the displays.

Refer to step 5 on page 11.

9 When the program is completed, remove the key from the console.

Refer to step 5 on page 13.

PART LIST—Model No. PETL62022

R0403A

To locate the parts listed below, refer to the EXPLODED DRAWING attached in the centre of this manual.

Key No.	Qty.	Description	Key No.	Qty.	Description	Key No.	Qty.	Description
1	1	Motor Hood	43	1	Right Top Handgrip	87	1	Rear Roller
2	3	Nylon Washer	44	8	Base Pad	88	1	Rear Foot (Right)
3	8	Pivot Nut	45	2	Platform Screw (Rear)	89	1	Motor Controller Wire
4	1	Motor Belt	46	1	Crossbar	90	1	iFIT.com Jack
5*	1	Motor Assembly	47	1	Ground Screw	91	2	Rear Roller Adj. Bolt
6	1	Flywheel	48	1	Ground Washer	92	2	Roller Adj. Washer
7	1	Motor	49	1	Upright Wire	93	1	Rear Endcap (Right)
8	2	Frame Spacer	50	1	Right Cup Holder	94	1	Allen Wrench
9	10	1/2 Screw	51	1	Frame	95	1	Rear Foot (Left)
10	1	Front Roller Adj. Bolt	52	1	Incline Motor Bolt	96	1	Rear Endcap (Left)
11	1	Motor Pivot Bolt	53	2	Caution Decal	97	1	Warning Decal
12	2	Lift Frame Pivot Bolt	54	2	Motor Pivot Bushing	98	2	Latch Plate Screw
13	1	Chest Pulse Sensor Strap	55	2	Extension Leg	99	1	Latch Plate
14	1	Motor Tension Nut	56	2	Wheel Bolt	100*	2	Extension Leg Assembly
15	1	Motor Washer	57	2	Roller Star Washer	101	1	Magnet
16	1	Motor Pivot Nut	58	2	Wheel	102	1	Belly Pan Clip
17	1	Motor Tension Bolt	59	1	Incline Motor	103	1	Chest Pulse Sensor
18	1	Reed Switch	60	1	Stop Bracket	104	1	Splitter
19	1	2” Incline Motor Bolt	61	1	Power Cord Set	105	1	Filter
20	1	Reed Switch Clip	62	1	Receptical	106	1	Ground Wire
21	1	Lift Frame	63	2	Static Decal	107	1	Ground Washer
22	1	Motor Star Washer	64	1	Upright	108	1	Ground Nut
23	1	Controller Bracket	65	1	Circuit Breaker	109	2	Long Screw
24	10	3/4” Screw	66	1	Audio Wire Nut	110	1	Ferrite Box
25	1	Controller	67	1	On/Off Switch	111	1	Filter Wire
26	1	Choke	68	1	Belly Pan	112	1	Left Bottom Handgrip
27	1	Power Board	69	1	Audio Wire	113	1	Right Bottom Handgrip
28	1	Plastic Stand-Off	70	2	Frame Pivot Bolt	114	18	Deck Rail Screw
29	1	Power Board Bracket	71	2	Base Endcap	#	1	14” White Wire, 2F
30	1	Key/Clip	72	4	Isolator	#	1	8” White Wire, 2F
31	1	Left Top Handgrip	73	2	Belt Guide	#	1	14” Blue Wire, 2F
32	1	Latch Assembly	74	4	Belt Guide Screw	#	1	4” Blue Wire, 2F
33	15	Screw	75	4	Platform Screw	#	1	4” Blue Wire, M/F
34	2	Handgrip Extension	76	1	Foot Pad (Right)	#	1	8” Green Wire, F/R
35	16	Extension Screw/ Handlebar Screw	77	1	Walking Belt	#	1	4” Black Wire, 2F
			78	1	Front Roller/Pulley	#	1	4” Red Wire, M/F
			79	1	Foot Pad (Left)	#	1	User's Manual
36	1	iFIT.com Wire	80	1	Walking Platform			
37	33	Small Screw	81	9	8” Cable Tie			
38	1	Console Base	82	4	Foam Tape			
39	1	Left Cup Holder	83	3	Tie Holder Clamp			
40	1	Console Back	84	2	Releasable Tie			
41	1	Book Holder	85	1	Pulse Wire			
42	1	Console	86	1	Motor Pivot Sleeve			

These parts are not illustrated

* Includes all parts shown in the box

REMOVE THIS EXPLODED DRAWING AND PART LIST FROM THE MANUAL

Save this EXPLODED DRAWING and PART LIST for future reference.

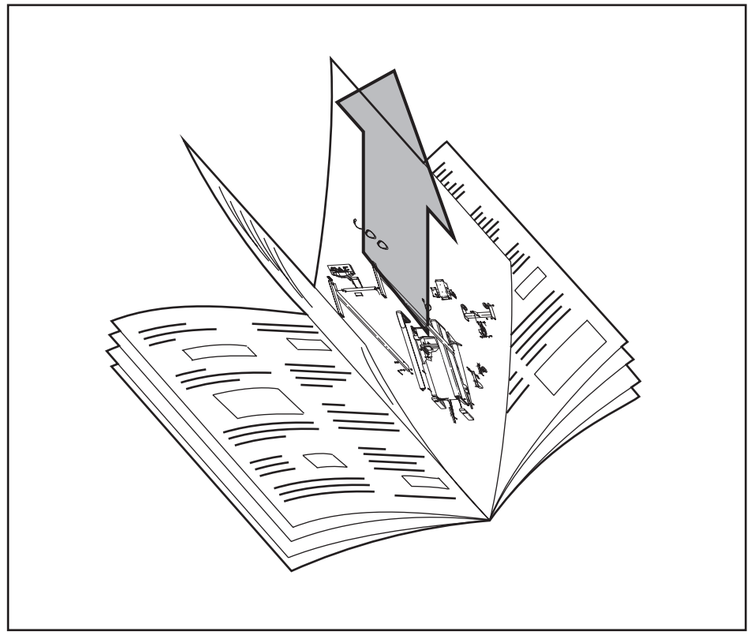

Note: Specifications are subject to change without notice. For information about ordering replacement parts, see the back cover of the User’s Manual.

EXPLODED DRAWING—Model No. PETL62022
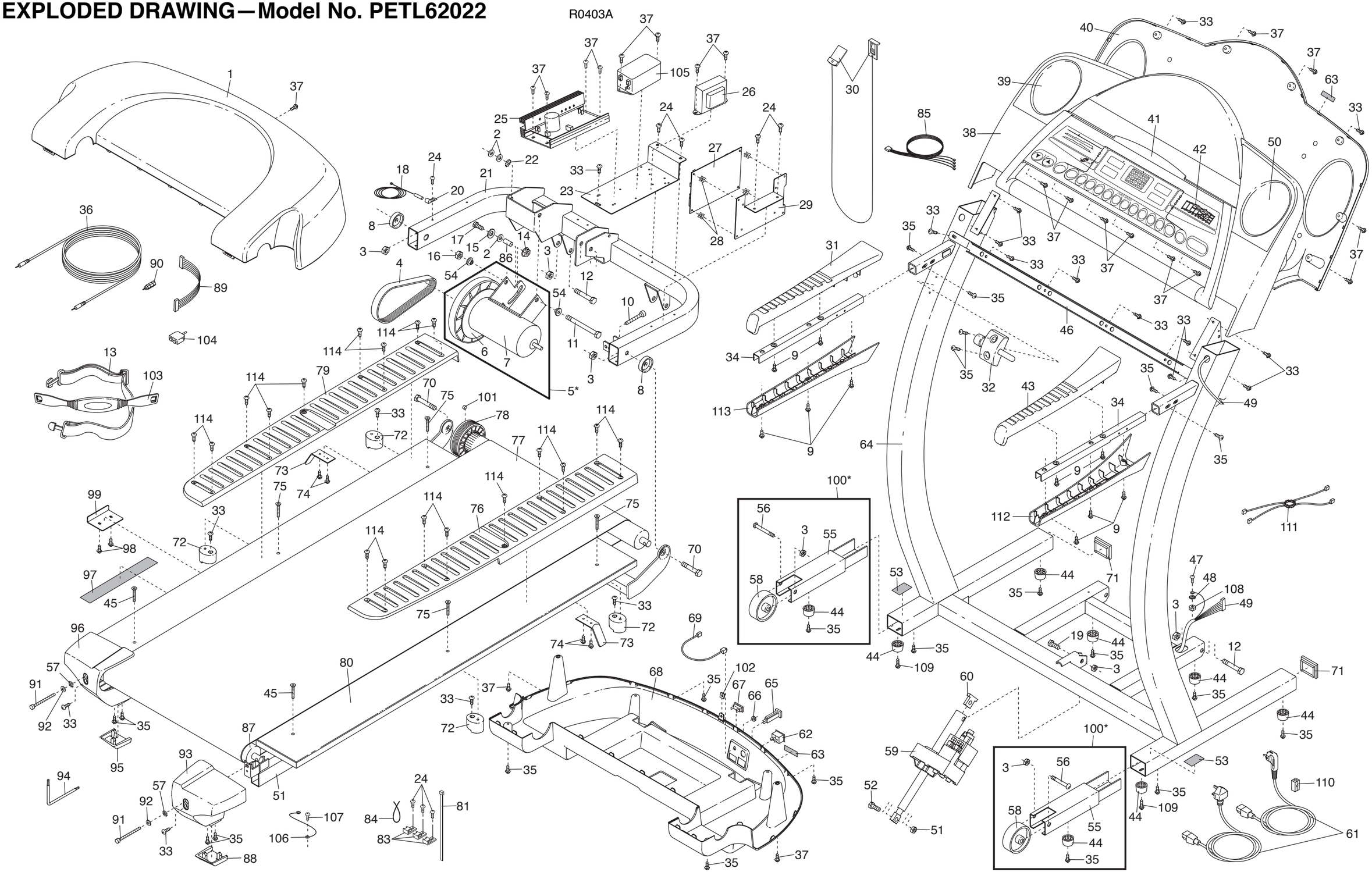
R0403A