# ORDERING REPLACEMENT PARTS

If you encounter any difficulties with this product, or if you need to order replacement parts, contact the ICON Fitness Lifestyle Ltd. office, or write:

ICON Fitness Lifestyle Ltd.
Greenwich House
223 North Street
Sheepscar
Leeds LS7 2AA
West Yorkshire

Tel: Country Code: 0345-089009
Fax: 0113-2411120

To help us assist you, please provide the following information when writing or calling:

- The MODEL NUMBER OF THE PRODUCT (WETL28090).
- The NAME OF THE PRODUCT (WESLO CADENCE® 1020 treadmill).
- The SERIAL NUMBER OF THE PRODUCT (see the front cover of this manual).
- The KEY NUMBER OF THE PART(S) (see the EXPLODED DRAWING and PART LIST attached in the centre of this manual).
- The DESCRIPTION OF THE PART(S) (see the EXPLODED DRAWING and PART LIST attached in the centre of this manual).

If possible, place the treadmill near your telephone for easy reference when calling.

WESLO is a registered trademark of ICON Health & Fitness, Inc.

Part No. 154608 R0599A

Printed in Canada © 1999 ICON Health & Fitness, Inc.

**Model No. WETL28090**
**Serial No. _____**

Write the serial number in the space above for future reference.

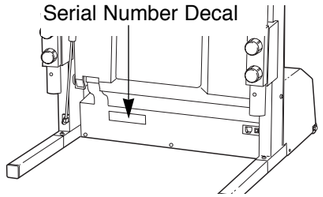


## QUESTIONS?

**As a manufacturer, we are committed to providing complete customer satisfaction. If you have questions, or if there are missing or damaged parts, we will guarantee you complete satisfaction through our Customer Service Department.**

**Please CALL:**
**0345-089009**

**Or WRITE:**
**ICON Fitness Lifestyle Ltd.**
**Greenwich House**
**223 North Street**
**Sheepscar**
**Leeds LS7 2AA**
**West Yorkshire**

## CAUTION

**Read all precautions and instructions in this manual before using this equipment. Save this manual for future reference.**

WESLO®

cadence 1020

**Class HC Fitness Product**

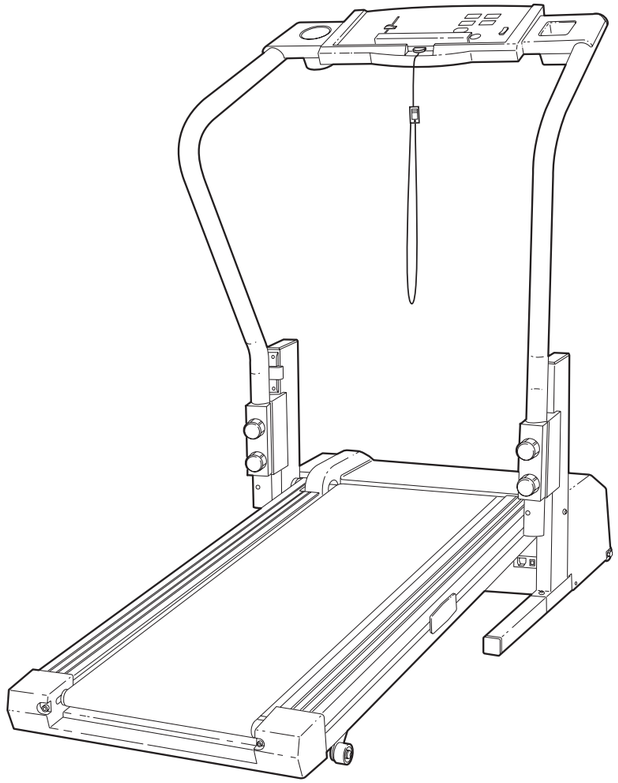

# USER'S MANUAL

# TABLE OF CONTENTS

IMPORTANT PRECAUTIONS . . . . . 2
BEFORE YOU BEGIN . . . . . 4
ASSEMBLY . . . . . 5
OPERATION AND ADJUSTMENT . . . . . 7
HOW TO FOLD AND MOVE THE TREADMILL . . . . . 10
MAINTENANCE AND TROUBLE-SHOOTING . . . . . 12
CONDITIONING GUIDELINES . . . . . 14
ORDERING REPLACEMENT PARTS . . . . . Back Cover

Note: A PART LIST and an EXPLODED DRAWING are attached in the centre of this manual. Remove the PART LIST and EXPLODED DRAWING before beginning assembly.

# IMPORTANT PRECAUTIONS

**⚠ WARNING: To reduce the risk of burns, fire, electric shock, or injury to persons, read the following important precautions and information before operating the treadmill.**

1. **It is the responsibility of the owner to ensure that all users of this treadmill are adequately informed of all warnings and precautions.**
2. **Use the treadmill only as described in this manual.**
3. **Place the treadmill on a level surface, with eight feet (2 m) of clearance behind it. Do not place the treadmill on a surface that blocks air openings. To protect the floor or carpet from damage, place a mat under the treadmill.**
4. **When choosing a location for the treadmill, make sure that the location and position permits access to the plug.**
5. **Keep the treadmill indoors, away from moisture and dust. Do not put the treadmill in a garage or covered patio, or near water.**
6. **Do not operate the treadmill where aerosol products are used or where oxygen is being administered.**
7. **Keep children under the age of 12 and pets away from the treadmill at all times.**
8. **The treadmill should not be used by persons weighing more than 250 pounds (115 kg).**
9. **Never allow more than one person on the treadmill at a time.**
10. **Wear appropriate exercise clothing when using the treadmill. Do not wear loose clothing that could become caught in the treadmill. Athletic support clothes are recommended for both men and women. Always wear athletic shoes. Never use the treadmill with bare feet, wearing only stockings, or in sandals.**
11. **When connecting the power cord (see page 7), plug the power cord into an earthed circuit. When replacing the fuse, on ASTA approved BS1362 type should be fitted to the fuse carrier. A 13 amp fuse should be used. No other appliance should be on the same circuit.**
12. **If you need an extension cord, use only a 3-conductor, 14 gauge (1mm²) cord that is no longer than 5 feet (1.5) meters.**
13. **Keep the power cord away from heated surfaces.**
14. **Never move the walking belt whilst the power is turned off. Do not operate the treadmill if the power cord or plug is damaged, or if the treadmill is not working properly. (See BEFORE YOU BEGIN on page 4 if the treadmill is not working properly.)**



**SUGGESTED STRETCHES**

The correct form for several basic stretches is shown in the drawings at the right. Move slowly as you stretch—never bounce.

**1. Toe Touch Stretch**

Stand with your knees bent slightly and slowly bend forward from your hips. Allow your back and shoulders to relax as you reach down toward your toes as far as possible. Hold for 15 counts, then relax. Repeat 3 times. Stretches: Hamstrings, back of knees and back.

**2. Hamstring Stretch**

Sit with one leg extended. Bring the sole of the opposite foot toward you and rest it against the inner thigh of your extended leg. Reach toward your toes as far as possible. Hold for 15 counts, then relax. Repeat 3 times for both legs. Stretches: Hamstrings, lower back and groin.

**3. Calf/Achilles Stretch**

With one leg in front of the other, reach forward and place your hands against a wall. Keep your back leg straight and your back foot flat on the floor. Bend your front leg, lean forward and move your hips toward the wall. Hold for 15 counts, then relax. Repeat 3 times for both legs. To cause further stretching of the achilles tendons, bend your back leg as well. Stretches: Calves, achilles tendons and ankles.

**4. Quadriceps Stretch**

With one hand against a wall for balance, reach back and grasp one foot with your other hand. Bring your heel as close to your buttocks as possible. Hold for 15 counts, then relax. Repeat 3 times for both legs. Stretches: Quadriceps and hip muscles.

**5. Inner Thigh Stretch**

Sit with the soles of your feet together and your knees outward. Pull your feet toward your groin area as far as possible. Hold for 15 counts, then relax. Repeat 3 times. Stretches: Quadriceps and hip muscles.

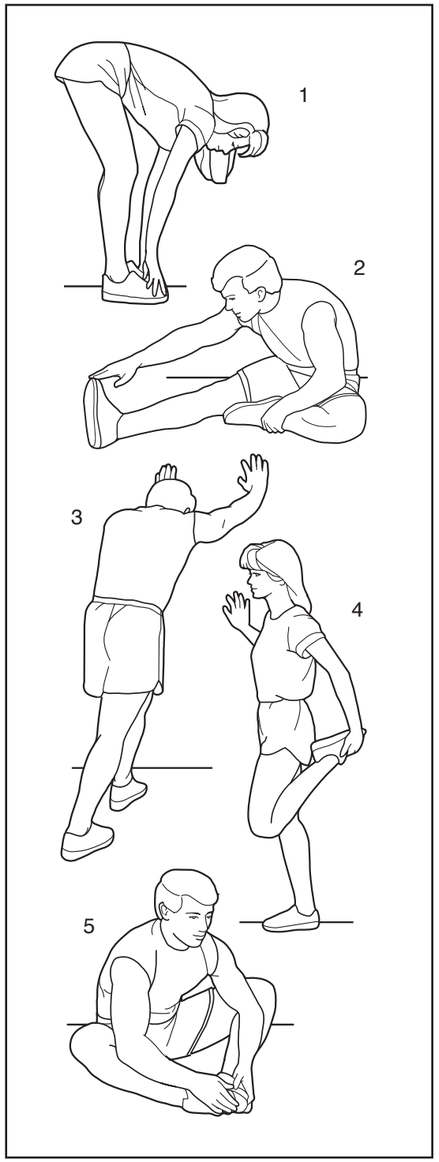

# CONDITIONING GUIDELINES

**⚠ WARNING: Before beginning this or any exercise program, consult your physician. This is especially important for individuals over the age of 35 or individuals with pre-existing health problems.**

**The pulse sensor is not a medical device. Various factors, including your movement, may affect the accuracy of heart rate readings. The sensor is intended only as an exercise aid in determining heart rate trends in general.**

The following guidelines will help you to plan your exercise program. Remember—these are general guidelines only. For more detailed exercise information, obtain a reputable book or consult your physician.

**EXERCISE INTENSITY**

Whether your goal is to burn fat or to strengthen your cardiovascular system, the key to achieving the desired results is to exercise with the proper intensity. The proper intensity level can be found by using your heart rate as a guide. To find the proper heart rate for you, first find your age at the top of the chart below (ages are rounded off to the nearest ten years). Next, find the two numbers below your age. The two numbers are your "training zone."

| AGE | 20 | 30 | 40 | 50 | 60 | 70 | 80 |
|---|---|---|---|---|---|---|---|
| MIN. | 125 | 120 | 115 | 110 | 105 | 95 | 90 |
| MAX. | 165 | 155 | 145 | 140 | 130 | 125 | 115 |

To measure your heart rate during exercise, use the pulse sensor on the console. If your heart rate is too high or too low, adjust the speed of the treadmill as needed.

**Fat Burning**

To burn fat effectively, you must exercise at a relatively low intensity level for a sustained period of time. During the first few minutes of exercise, your body uses easily accessible carbohydrate calories for energy. Only after the first few minutes does your body begin to use stored fat calories for energy. If your goal is to burn fat, adjust the speed and incline of the treadmill until your heart rate is near the low end of your training zone. (See pages 8 and 9.)

**Aerobic Exercise**

If your goal is to strengthen your cardiovascular system, your exercise must be "aerobic." Aerobic exercise is activity that requires large amounts of oxygen for prolonged periods of time. This increases the demand on the heart to pump blood to the muscles, and on the lungs to oxygenate the blood. For aerobic exercise, adjust the speed and incline of the treadmill until your heart rate is near the middle of your training zone. (See pages 8 and 9.)

**WORKOUT GUIDELINES**

Each workout should include the following three parts:

**Warming Up**

Start each workout with 5 to 10 minutes of stretching and light exercise. A proper warm-up increases your body temperature, heart rate, and circulation in preparation for exercise.

**Training Zone Exercise**

After warming up, increase the intensity of your exercise until your pulse is in your training zone for 20 to 60 minutes. (During the first few weeks of your exercise program, do not keep your pulse in your training zone for longer than 20 minutes.) Breathe regularly and deeply as you exercise—never hold your breath.

**Cool-down**

Finish each workout with 5 to 10 minutes of stretching to cool down. This will increase the flexibility of your muscles and will help prevent post-exercise problems.

**EXERCISE FREQUENCY**

To maintain or improve your condition, complete three workouts each week, with at least one day of rest between workouts. After a few months, you may complete up to five workouts each week if desired. The key to success is to make exercise a regular and



**15. Never start the treadmill whilst you are standing on the walking belt. Always hold the handrails whilst using the treadmill.**

**16. The treadmill is capable of high speeds. Adjust the speed in small increments to avoid sudden jumps in speed.**

**17. The pulse sensor is not a medical device. Various factors, including the user's movement, may affect the accuracy of heart rate readings. The pulse sensor is intended only as an exercise aid in determining heart rate trends in general.**

**18. Never leave the treadmill unattended whilst it is running. Always remove the key when the treadmill is not in use.**

**19. Do not change the incline of the treadmill by placing objects under the treadmill.**

**20. Do not attempt to raise, lower, or move the treadmill until it is properly assembled. (See ASSEMBLY on page 5, and HOW TO MOVE THE TREADMILL on page 10.) You must be able to safely lift 45 pounds (20 kg) in order to raise, lower, or move the treadmill.**

**21. When storing the treadmill, make sure that the storage latch is fully closed.**

**22. Inspect and tighten all parts of the treadmill every three months.**

**23. Never drop or insert any object into any opening.**

**24. DANGER: Always unplug the power cord before performing the maintenance and adjustment procedures described in this manual. Never remove the motor hood unless instructed to do so by an authorised service representative. Servicing other than the procedures in this manual should be performed by an authorised service representative only.**

**25. This treadmill is intended for in-home use only. Do not use this treadmill in any commercial, rental, or institutional setting.**

**⚠ WARNING: Before beginning this or any exercise program, consult your physician. This is especially important for persons over the age of 35 or persons with pre-existing health problems. Read all instructions before using. ICON assumes no responsibility for personal injury or property damage sustained by or through the use of this product.**

## SAVE THESE INSTRUCTIONS

**The decal shown at the right has been placed on your treadmill. If the decal is missing, or if it is not legible, please call our Customer Service Department to order a free replacement decal (see ORDERING REPLACEMENT PARTS on the back cover of this manual). Apply the decal in the location shown.**

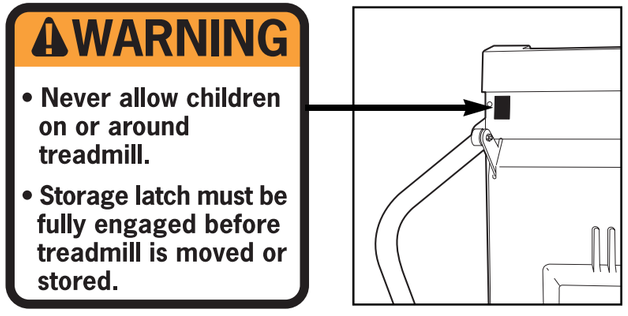

# BEFORE YOU BEGIN

Thank you for selecting the WESLO CADENCE® 1020 treadmill. The CADENCE 1020 treadmill combines advanced technology with innovative design to let you enjoy an excellent form of cardiovascular exercise in the convenience and privacy of your home. And when you're not exercising, the unique CADENCE 1020 can be folded up, requiring less than half the floor space of other treadmills.

**For your benefit, read this manual carefully before using the treadmill**. If you have additional questions, please call our Customer Service Department at 0345-089009. To help us assist you, please note the product model number and serial number before calling. The model number of the treadmill is WETL28090. The serial number can be found on a decal attached to the treadmill (see the front cover of this manual for the location).

Before reading further, please review the drawing below and familiarise yourself with the parts that are labelled.

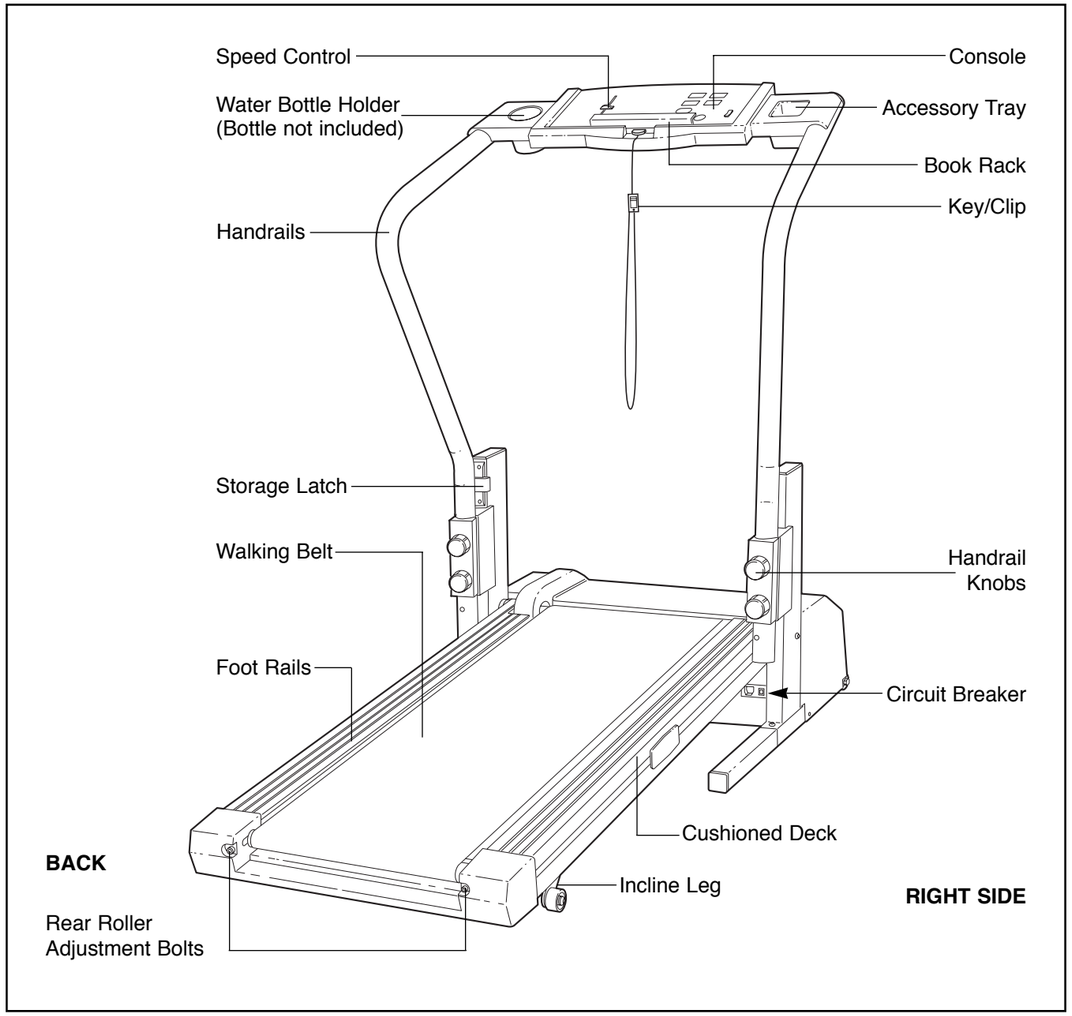




**PROBLEM: The walking belt is off-centre or slips when walked on**

**SOLUTION:** a. **If the walking belt has shifted to the left**, first remove the key and **UNPLUG THE POWER CORD**. Using the allen wrench, turn the left rear roller adjustment bolt clockwise, and the right bolt counterclockwise, 1/4 of a turn each. Be careful not to overtighten the walking belt. Plug in the power cord, insert the key and run the treadmill for a few minutes. Repeat until the walking belt is centred.

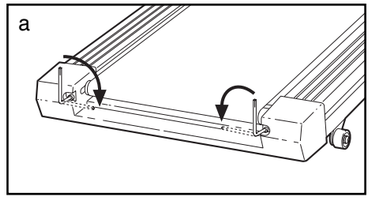


b. **If the walking belt has shifted to the right**, first remove the key and **UNPLUG THE POWER CORD**. Using the allen wrench, turn the left rear roller adjustment bolt counterclockwise, and the right bolt clockwise, 1/4 of a turn each. Be careful not to overtighten the walking belt. Plug in the power cord, insert the key and run the treadmill for a few minutes. Repeat until the walking belt is centred.

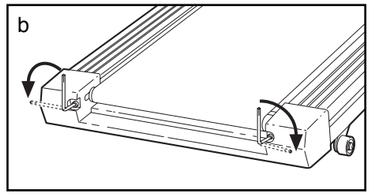


c. **If the walking belt slips when walked on**, first remove the key and **UNPLUG THE POWER CORD**. Using the allen wrench, turn both rear roller adjustment bolts clockwise, 1/4 of a turn. When the walking belt is correctly tightened, you should be able to lift each side of the walking belt 5 to 7 cm off the walking platform. Be careful to keep the walking belt centred. Plug in the power cord, insert the key and run the treadmill for a few minutes. Repeat until the walking belt is properly tightened.

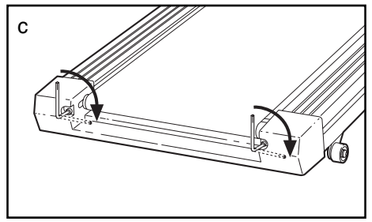


**PROBLEM: The walking belt slows when walked on**

**SOLUTION:** a. If an extension cord is needed, use only a 3-conductor, 14-gauge (1mm²) cord that is no longer than 5 feet (1.5 meters).

b. If the walking belt is overtightened, treadmill performance may decrease and the walking belt may be permanently damaged. Remove the key and **UNPLUG THE POWER CORD**. Using the allen wrench, turn both rear roller adjustment bolts counterclockwise, 1/4 of a turn. When the walking belt is properly tightened, you should be able to lift each side of the walking belt 5 to 7 cm off the walking platform. Be careful to keep the walking belt centred. Plug in the power cord, insert the key and run the treadmill for a few minutes. Repeat until the walking belt is properly tightened.

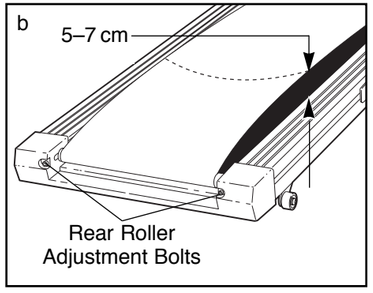


c. If the walking belt still slows when walked on, please call our Customer Service Department.

# MAINTENANCE AND TROUBLE-SHOOTING

**Most treadmill problems can be solved by following the steps below. Find the symptom that applies, and follow the steps listed. If further assistance is needed, please call our Customer Service Department.**

**PROBLEM: The power does not turn on**

**SOLUTION:** a. Make sure that the power cord is plugged into a properly earthed outlet. (See HOW TO PLUG IN THE POWER CORD on page 7.) If an extension cord is needed, use only a 14-gauge cord of five fee (1,5m) or less in length.

b. After the power cord has been plugged in, make sure that the key is fully inserted into the console. See step 1 on page 8.

c. Check the circuit breaker located on the treadmill frame near the power cord. If the switch protrudes as shown, the circuit breaker has tripped. To reset the circuit breaker, wait for five minutes and then press the switch back in.

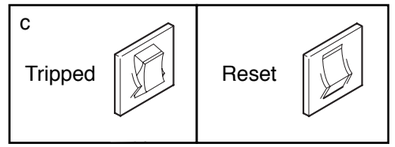


**PROBLEM: The power turns off during use**

**SOLUTION:** a. Check the circuit breaker located on the treadmill frame near the power cord (see the drawing above). If the circuit breaker has tripped, wait for five minutes and then press the switch back in.

b. Make sure that the power cord is plugged in.

c. Remove the key from the console. Reinsert the key fully into the console. See step 1 on page 8.

d. If the treadmill still will not run, please call our Customer Service Department.

**PROBLEM: The displays of the console do not function properly**

**SOLUTION:** a. Check the batteries in the console. If the batteries need to be replaced, see assembly step 6 on page 6. Most problems are the result of drained batteries.

b. Remove the key from the console and **UNPLUG THE POWER CORD.** Remove the six screws from the hood. Carefully remove the hood. Locate the Reed Switch (89) and the Magnet (88) on the left side of the Pulley (90). Turn the Pulley until the Magnet is aligned with the Reed Switch. **Make sure that the gap between the Magnet and the Reed Switch is about 3 mm.** If necessary, loosen the Screw (13) and move the Reed Switch slightly. Retighten the Screw. Re-attach the hood, and run the treadmill for a few minutes to check for a correct speed reading.

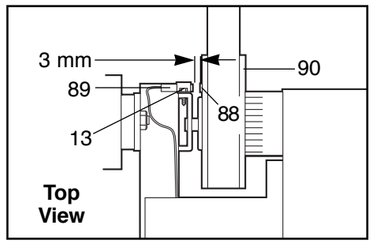




# ASSEMBLY

**Assembly requires two people.** Set the treadmill in a cleared area and remove all packing materials. Do not dispose of the packing materials until assembly is completed. Note: The inner side of the walking belt is coated with high-performance lubricant. During shipping, a small amount of lubricant may be transferred to the top of the walking belt or the shipping carton. This does not affect treadmill performance. If there is lubricant on top of the walking belt, wipe off the lubricant with a soft cloth and a mild, non-abrasive cleaner. **Assembly requires the included allen wrench and your own phillips screwdriver .**

1. Note that the Right Handrail (32) and the Console Base (not shown) are connected to the treadmill by the Wire Harness (53). **During assembly steps 1 through 5, be careful to avoid pulling on or damaging the Wire Harness.**

   With the help of a second person, carefully lay the treadmill onto one side. Insert one of the Base Legs (44) into the Upright (38) as shown. Make sure that the Base Leg Pad (33) is in the indicated position. Using the included Allen Wrench (81), attach the Base Leg with a Base Leg Screw (39). Attach the other Base Leg (44) in the same way.

   With the help of a second person, carefully raise the treadmill to the upright position so that both Base Legs (44) are resting flat on the floor.

2. Carefully lower the treadmill. Remove the two indicated Latch Screws (5) and the shipping bracket from the left Upright (38). **Save the Latch Screws for use in assembly step 3;** discard the shipping bracket.

3. Remove the two remaining Latch Screws (5) from the left Upright (38).

   Remove the cardboard and tape from the Latch (67). Attach the Latch to the left Upright (38) with the four Latch Screws (5). **Make sure that the Latch Screws are tight, but do not overtighten them; if the Latch Screws are overtightened, the Latch (67) will not slide smoothly.**

   Note: The inset drawing shows how the parts of the Latch (67) fit together.

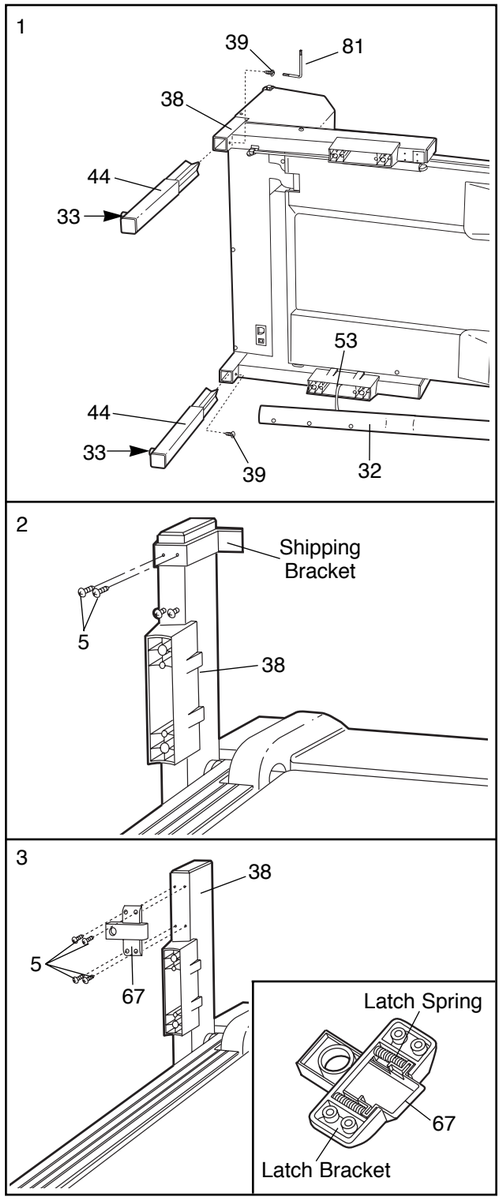

4. Attach a Handrail Cover (63) and the Left Handrail (4) to the left Upright (38) with two Handrail Knobs (1) and two 3/8” Washers (46). **Do not tighten the Handrail Knobs. If you are shorter than 1,73 m, use the upper two holes in the Handrail; if you are 1,73 m or taller, use the lower two holes.**

   Have a second person hold the Console Base (87) and the Right Handrail (32) in the position shown. Feed the excess Wire Harness (53) into the upper end of the Handrail, and pull the excess from the lower end of the Handrail. Then, insert the excess Wire Harness into the right Upright (38).

   Next, attach a Handrail Cover (63) and the Right Handrail (32) to the right Upright (38) with two Handrail Knobs (1) and two 3/8” Washers (46). **Do not tighten the Handrail Knobs. Make sure that both Handrails are at the same height.**

   Refer to the inset drawing. Insert a Handrail Plug (70) into the unused hole in each Handrail (4, 32).

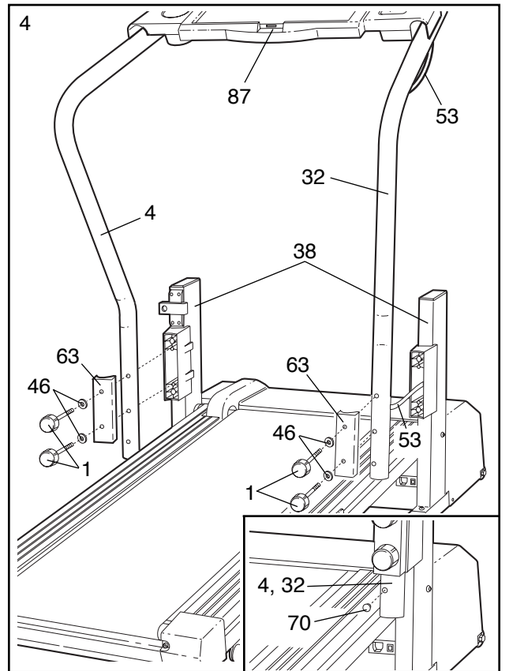


5. Set the Console Base (87) on the Handrails (4, 32). Route the Wire Harness (53) as shown, and attach the Console Base to the Handrails with the four Handrail Screws (5). **Make sure that the Handrail Screws are tight, but do not overtighten them.** Insert the excess Wire Harness (53) into the Right Handrail.

   **Tighten the four Handrail Knobs (1) used in step 4.**

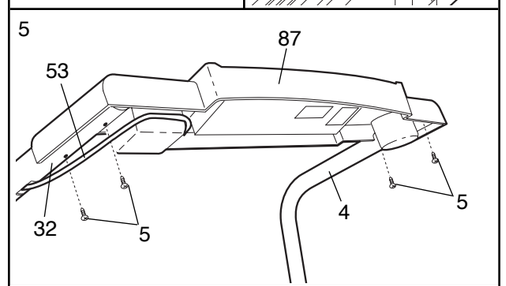


6. The Console (11) requires three "AA" batteries (not included); alkaline batteries are recommended. Open the Battery Cover (12) and press the batteries into the Console; the negative (–) ends of the batteries must touch the springs. Close the battery cover, push up on the tab, and then push the tab forward as shown in the inset drawing. Be sure that the tab locks into place.

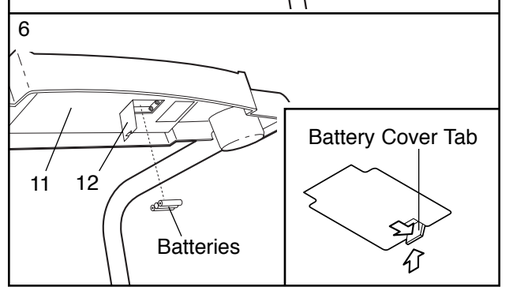


7. **Make sure that all parts are properly tightened before you use the treadmill.** Note: Some parts may be left over after assembly is completed. Save the included allen wrench for adjusting the walking belt. To protect the floor or carpet from damage, place a mat under the treadmill.



**HOW TO LOWER THE TREADMILL FOR USE**

1. Hold the upper end of the treadmill with your right hand as shown. Using your left thumb, slide open the storage latch and hold it open. Pivot the treadmill until the frame is past the storage latch.

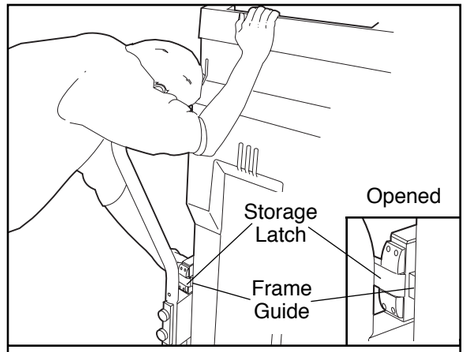


2. Hold the treadmill firmly with both hands, and lower the treadmill to the floor. **To decrease the possibility of injury, bend your legs and keep your back straight.**

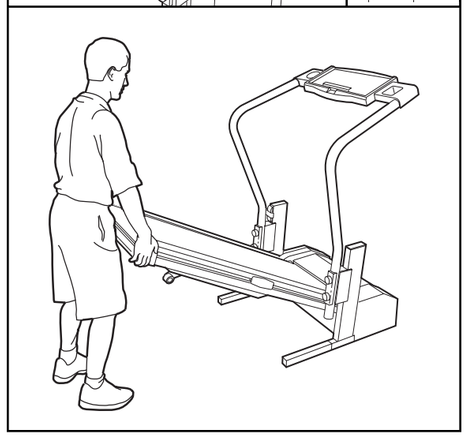

# HOW TO FOLD AND MOVE THE TREADMILL

### HOW TO FOLD THE TREADMILL FOR STORAGE

Before folding the treadmill, unplug the power cord.
**Caution: You must be able to safely lift 45 pounds (20 kg) in order to raise, lower, or move the treadmill.**

1. Hold the treadmill with your hands in the locations shown at the right. **To decrease the possibility of injury, bend your legs and keep your back straight. As you raise the treadmill, make sure to lift with your legs rather than your back.** Raise the treadmill about halfway to the vertical position.

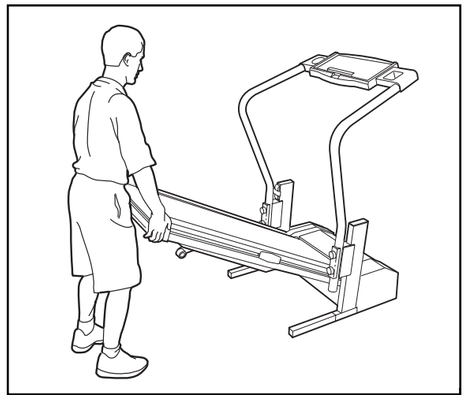

2. Move your right hand to the position shown at the right, and hold the treadmill firmly. Raise the treadmill until the storage latch locks over the frame guide. **Make sure that the storage latch closes fully over the frame guide.**

   **To protect the floor or carpet from damage, place a mat under the treadmill. Keep the treadmill out of direct sunlight. Do not leave the treadmill in the storage position in temperatures above 85° Fahrenheit.**

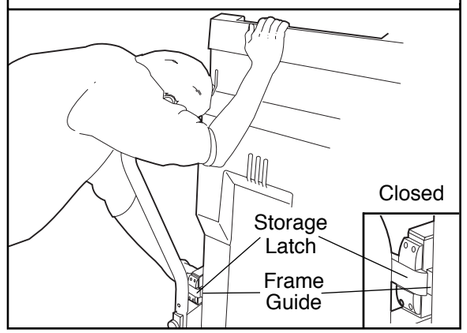


### HOW TO MOVE THE TREADMILL

Before moving the treadmill, convert the treadmill to the storage position as described above. **Make sure that the storage latch is locked fully over the frame guide.**

1. Hold the upper ends of the handrails. Place one foot near one of the front wheels as shown.

2. Tilt the treadmill back until it rolls freely on the front wheels. Carefully move the treadmill to the desired location. **Never move the treadmill without tipping it back. To reduce the risk of injury, use extreme caution whilst moving the treadmill. Do not attempt to move the treadmill over an uneven surface.**

3. Place one foot on the base, and carefully lower the treadmill until it is resting in the storage position.

# OPERATION AND ADJUSTMENT

### THE PERFORMANT LUBE™ WALKING BELT

Your treadmill features a walking belt coated with PERFORMANT LUBE™, a high-performance lubricant. **IMPORTANT: Never apply silicone spray or other substances to the walking belt or the walking platform. They will deteriorate the walking belt and cause excessive wear.**

### HOW TO PLUG IN THE POWER CORD

**This product must be earthed.** If it should malfunction or break down, earthing provides a path of least resistance for electric current to reduce the risk of electric shock. This product is equipped with a cord having an equipment-earthing conductor and a earthing plug. Plug one end of the cord into the treadmill. **Plug the power cord into an appropriate outlet that is properly installed and earthed in accordance with all local codes and ordinances.**

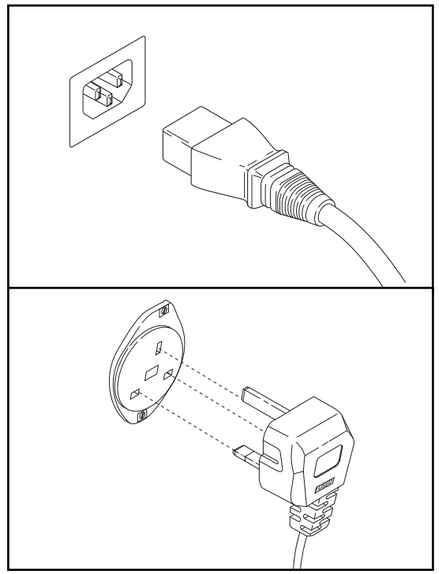

**⚠ DANGER: Improper connection of the equipment-earthing conductor can result in an increased risk of electric shock. Check with a qualified electrician or serviceman if you are in doubt as to whether the product is properly earthed. Do not modify the plug provided with the product—if it will not fit the outlet, have a proper outlet installed by a qualified electrician.**

Use only a power cord type H05VV-F with a conductor of at east 1mm², with a country recognised plug and an appliance coupler.

### HOW TO SELECT KILOMETRES AND MILES

The console can display distance and speed in either kilometres or miles. To change the unit of measurement, first **UNPLUG THE POWER CORD.** Next, remove the six screws attaching the console to the console base. Lift the console a few inches, being careful not to pull on the wires, and turn the console over. Locate the small switch on the back of the console. Move the switch upward or downward to select kilometres or miles. Re-attach the console to the console base. **After changing the unit of measurement, remove one of the batteries from the console for about five seconds and then reinsert it. This will reset the console.**

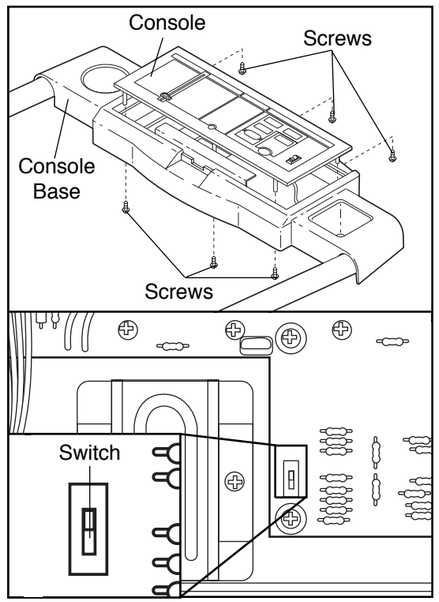

## DIAGRAM OF THE CONSOLE

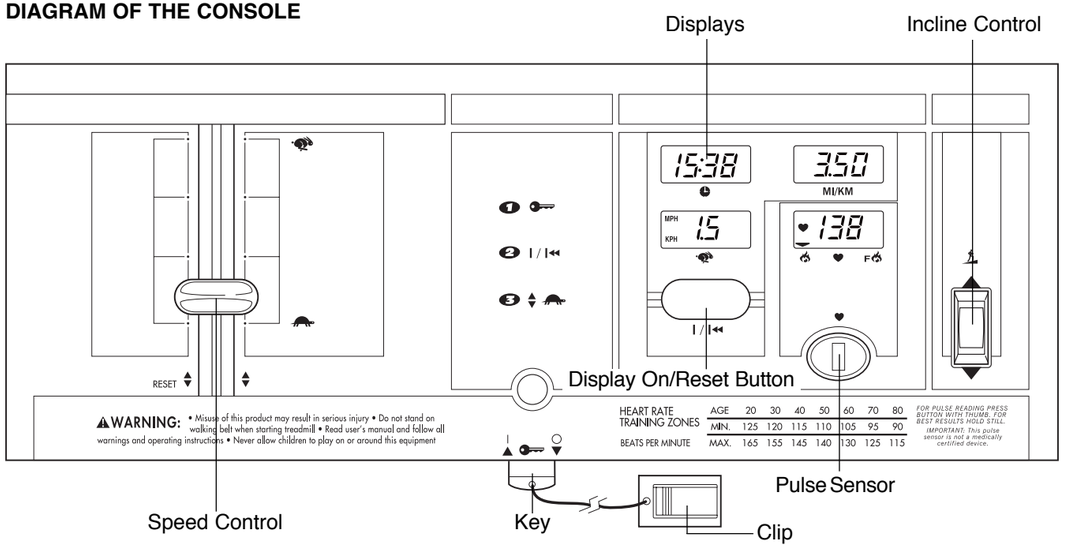


**⚠ CAUTION: Before operating the console, read the following precautions.**

- **Do not stand on the walking belt when turning on the power.**
- **Always wear the clip (see the drawing above) whilst operating the treadmill. When the key is removed from the console, the walking belt will stop.**
- **Adjust the speed in small increments.**
- **To reduce the possibility of electric shock, keep the console dry. Avoid spilling liquids on the console and use only a sealable water bottle.**

## STEP BY STEP CONSOLE OPERATION

Before operating the console, make sure that the power cord is properly plugged in. (See HOW TO PLUG IN THE POWER CORD on page 7.) In addition, make sure that batteries are installed in the console. (See step 6 on page 6.) If there is a thin sheet of clear plastic on the console, remove it.

Step onto the foot rails of the treadmill. Next, find the clip attached to the key (see the drawing above). Slide the clip onto your waistband.

Follow the steps below to operate the console.

**1 Insert the key fully into the power switch.**

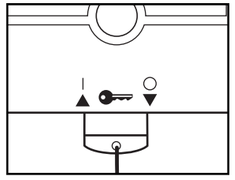

Note: Inserting the key will not turn on the displays. The displays will turn on when the display on/reset button is pressed or when the walking belt is started. If you just installed batteries, the displays will already be on.

**2 Reset the console and start the walking belt.**

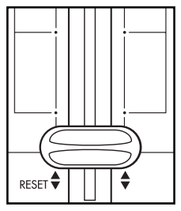


Slide the speed control to the RESET position. **Note: Each time the walking belt is stopped, the speed control must be moved to the RESET position before the walking belt can be restarted.**

Next, slowly slide the speed control until the walking belt begins to move at slow speed. Carefully step onto the walking belt and begin exercising. Change the speed of the walking belt as desired by moving the speed control.

To stop the walking belt, step onto the foot rails and slide the speed control to the RESET position.



**3 Follow your progress with the four displays.**

**TIME display**—This display shows the elapsed time.

**DISTANCE display**—This display shows the distance that you have walked or run, in miles or kilometres.

**SPEED display**—This display shows the speed of the walking belt, in miles or kilometres per hour.

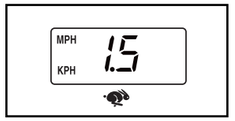


**CALORIES/FAT CALORIES/PULSE display**—This display shows the approximate numbers of calories and fat calories you have burned. (See FAT BURNING on page 14.) Every seven seconds, the display will change from one number to the other, as indicated by the mode arrows. This display also shows your pulse when the pulse sensor is used (see step 4).

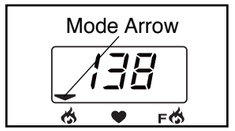


The displays can be reset, if desired, by pressing the display on/reset button.

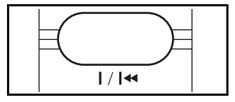

**4 Measure your pulse, if desired.**

To measure your pulse, stand on the foot rails and place your thumb on the pulse sensor as shown. The pulse sensor is pressure activated—fully press it down. **Do not press too hard, or the circulation in your thumb will be restricted, and your pulse will not be detected.** Next, raise your thumb slightly until the heart-shaped indicator in the pulse display flashes **steadily**. Hold your thumb at this level. After a few seconds, three dashes will appear in the display and your pulse will be shown. Hold your thumb on the sensor for another 15 seconds for the most accurate reading.

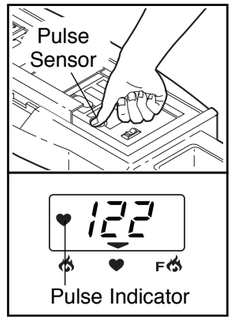


If the displayed pulse appears to be too high or too low, or if your pulse is not displayed, lift your thumb off the sensor and allow the display to reset. Press down again on the sensor as described above. Make sure that your thumb is positioned as shown, and that you are applying the proper amount of pressure to the pulse sensor. Try the sensor several times until you become familiar with it. Remember to stand still whilst measuring your pulse.

**5 Adjust the incline of the treadmill as desired.**

To change the incline, press the top or bottom of the incline control until the desired incline level is reached.

**6 Turn off the power.**

**To turn off the power, simply wait for about four minutes.** If the walking belt is stationary and the console buttons are not pressed for four minutes, the power will turn off automatically.

## HANDRAIL ADJUSTMENT

The Handrails (4, 32) can be adjusted to either of two different heights. **Before adjusting the Handrails, remove the key and unplug the power cord.** Remove the four Handrail Screws (5). Whilst a second person holds the Console Base (87), remove the Handrail Knobs (1) and Handrail Covers (63). **Note: Make sure that the 3/8" Washers (46) stay on the Handrail Knobs.** Raise or lower the Handrails to the desired height, being careful not to damage the Wire Harness (53). Re-attach the Handrails with the Handrail Knobs and Handrail Covers. **Important: If you are 1,73 m or taller, use the lower two holes; if you are shorter than 1,73 m, use the upper two holes. Make sure that both Handrails are at the same height. Do not tighten the Handrail Knobs yet. Always attach each Handrail with two Handrail Knobs.** Attach the Console Base (87) (see assembly step 5 on page 6). Insert a Handrail Plug (70) into the unused hole in each Handrail (4, 32).

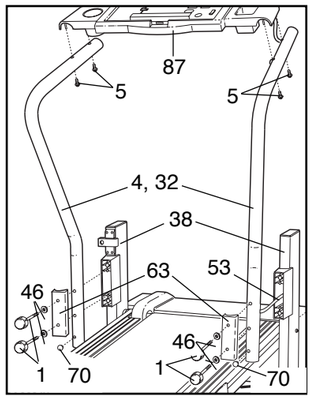

# PART LIST—Model No. WETL28090

R0599A

| Key No. | Qty. | Description |
|---|---|---|
| 1 | 4 | Handrail Knob |
| 2 | 4 | Long Screw |
| 3 | 2 | Handrail Spacer |
| 4 | 1 | Left Handrail |
| 5 | 10 | Handrail/Latch Screw |
| 6 | 1 | Key/Clip |
| 7 | 1 | Console Plug |
| 8 | 13 | Console Screw/Hood Screw |
| 9 | 1 | Speed Potentiometer |
| 10 | 1 | Speed Control |
| 11* | 1 | Console Assembly |
| 12 | 1 | Battery Cover |
| 13 | 20 | Electronic Screw |
| 14 | 4 | Belt Guide Screw |
| 15 | 3 | Nylon Washer |
| 16 | 1 | Electronic Bracket |
| 17 | 1 | Motor Pivot Bushing |
| 18 | 1 | Motor Belt |
| 19 | 4 | Motor Tension Bolt/Incline Leg Bolt |
| 20 | 1 | Motor Tension Washer |
| 21 | 1 | Tension Star Washer |
| 22 | 1 | Motor Pivot Nut |
| 23 | 1 | Motor/Pulley/Flywheel/Fan |
| 24 | 1 | Pulley/Flywheel/Fan |
| 25 | 1 | Motor |
| 26 | 1 | Motor Pivot Bolt |
| 27 | 2 | 8” Cable Tie |
| 28 | 6 | Isolator Screw |
| 29 | 1 | Hood |
| 30 | 1 | Hood Shield |
| 31 | 4 | Leg Pad Screw |
| 32 | 1 | Right Handrail |
| 33 | 4 | Base Leg Pad |
| 34 | 1 | Motor Belly Pan |
| 35 | 1 | Controller |
| 36 | 2 | Frame Pivot Bolt |
| 37 | 2 | Star Washer |
| 38 | 1 | Upright/Base |
| 39 | 2 | Base Leg Screw |
| 40 | 5 | Washer |
| 41 | 2 | Wheel Bolt |
| 42 | 2 | Wheel |
| 43 | 7 | Wheel Nut/Incline Nut |
| 44 | 2 | Base Leg |
| 45 | 1 | Circuit Breaker |
| 46 | 6 | 3/8” Washer |
| 47 | 1 | Receptacle |
| 48 | 1 | Motor Tension Nut |
| 49 | 1 | Shock |
| 50 | 1 | Right Foot Rail |
| 51 | 4 | Platform Screw |
| 52 | 1 | Front Roller Adj. Bolt |
| 53 | 1 | Wire Harness |
| 54 | 1 | Frame Pivot Spacer (Left) |
| 55 | 2 | Oval Isolator |
| 56 | 12 | Belly Pan Fastener |
| 57 | 1 | Choke |
| 58 | 2 | Belt Guide |
| 59 | 1 | Belly Pan |
| 60 | 2 | Isolator |
| 61 | 1 | Incline Control |
| 62 | 1 | Frame Pivot Spacer (Right) |
| 63 | 2 | Handrail Cover |
| 64 | 2 | Ground Nut |
| 65 | 1 | Incline Bracket |
| 66 | 1 | Frame Guide Spacer |
| 67* | 1 | Latch |
| 68 | 9 | Wire Tie |
| 69 | 5 | Wire Tie Clamp |
| 70 | 2 | Handrail Plug |
| 71 | 1 | Incline Motor |
| 72 | 1 | Incline Leg |
| 73 | 2 | Incline Wheel Bolt |
| 74 | 2 | Incline Wheel |
| 75 | 4 | Incline Leg Nut |
| 76 | 2 | Ground Screw |
| 77 | 1 | Ground Wire |
| 78 | 2 | Rear Roller Adj. Bolt |
| 79 | 1 | Rear Endcap |
| 80 | 4 | Insert Nut |
| 81 | 1 | Allen Wrench |
| 82 | 1 | Latch Decal |
| 83 | 1 | Rear Roller |
| 84 | 1 | Frame |
| 85 | 2 | Rear Platform Screw |
| 86 | 1 | Left Foot Rail |
| 87 | 1 | Console Base |
| 88 | 1 | Magnet |
| 89 | 1 | Reed Switch |
| 90 | 1 | Front Roller/Pulley |
| 91 | 1 | Sensor Clip |
| 92 | 1 | Walking Platform |
| 93 | 1 | Walking Belt |
| 94 | 11 | Motor Pan Screw |
| 95 | 2 | Leg Endcap |
| 96 | 1 | Frame Guide |
| 97 | 1 | Book Rack |
| 98 | 2 | Upright Grommet |
| 99 | 2 | Upright Endcap |
| 100 | 1 | Cable Clamp |
| 101 | 2 | Console Rack Screw |
| 102 | 2 | Roller Guard |
| 103 | 2 | Incline Bolt |
| 104 | 1 | Motor Pivot Sleeve |
| 105 | 1 | Filter |
| 106 | 1 | 30” Wire Harness Extension |
| 107 | 1 | 14” Black Upright Wire Harness |
| # | 1 | 4” Green/Yellow Wire |
| # | 1 | 4” White Wire, 2 Female |
| # | 2 | 4” Black Wire, 2 Female |
| # | 1 | 8” Green/Yellow Wire |
| # | 1 | 8” White Wire, Pig Tail |
| # | 1 | 8” Blue Wire, Pig Tail |
| # | 1 | User’s Manual |

* Includes all parts shown in the box
\# Indicates a non-illustrated part

Specifications are subject to change without notice. To order replacement parts, see the back cover of this manual.

# REMOVE THIS EXPLODED DRAWING AND PART LIST FROM THE MANUAL

**Save this EXPLODED DRAWING and PART LIST for future reference.**

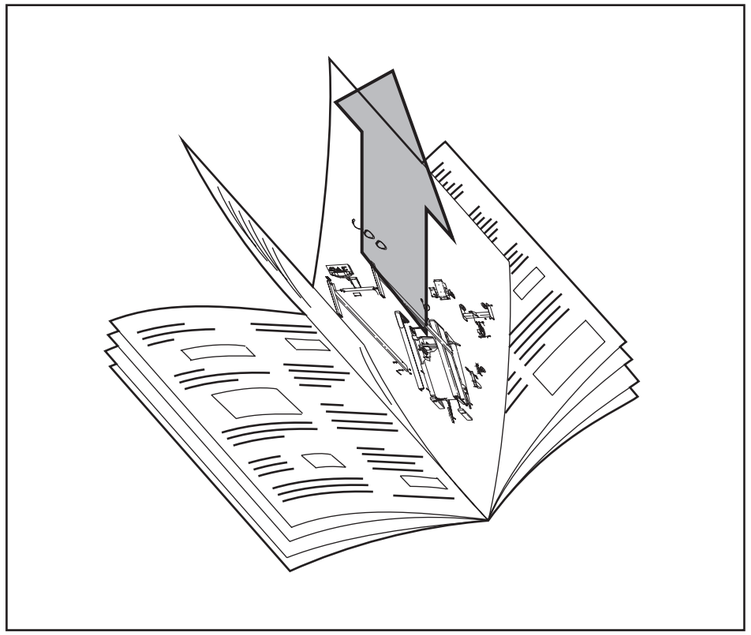

Note: Specifications are subject to change without notice. For information about ordering replacement parts, see the back cover of the User’s Manual.

# EXPLODED DRAWING—Model No. WETL28090
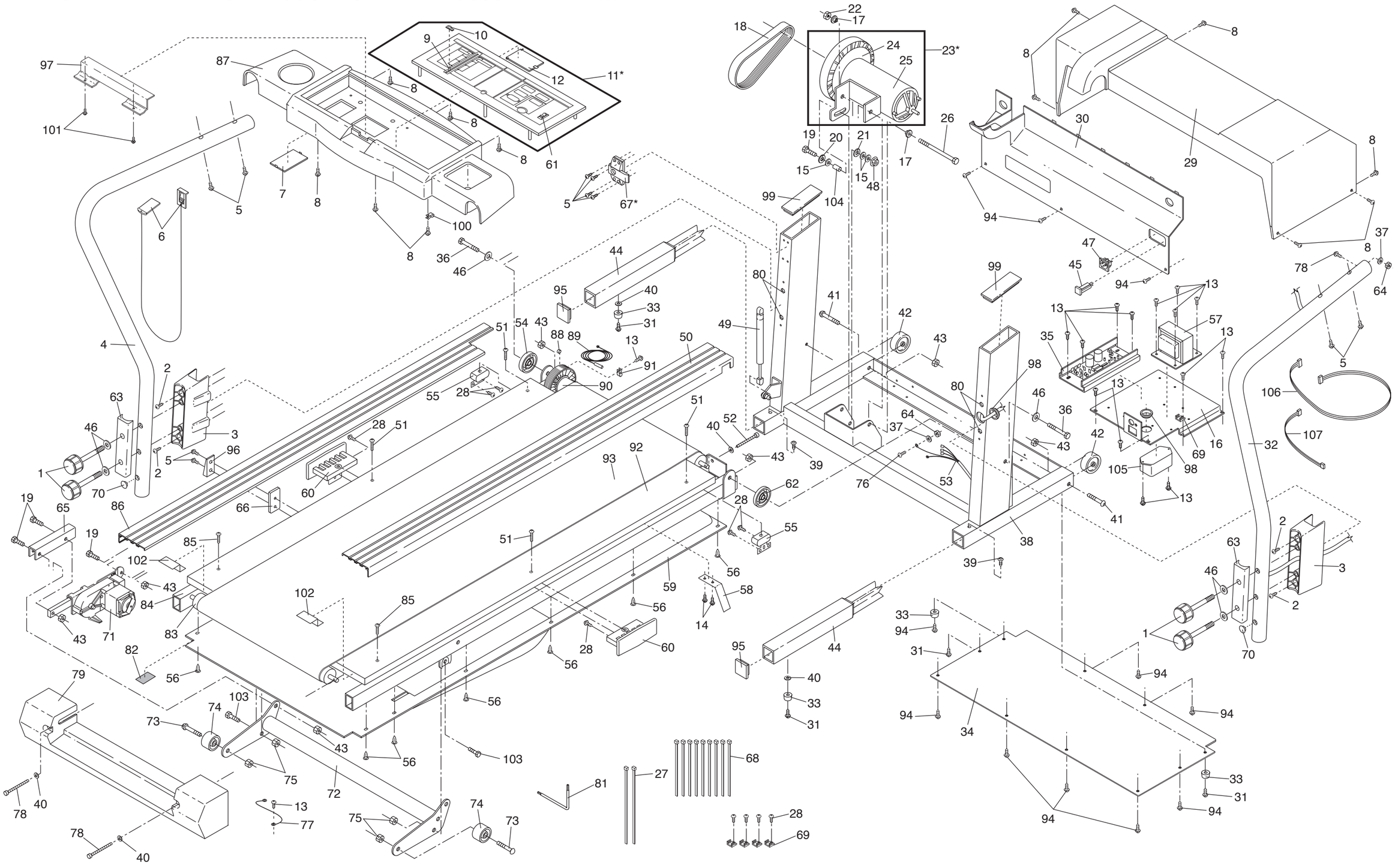
R0599A