510 Direct Vent Indoor and Outdoor Models

On-Demand Water Heater

Service Manual

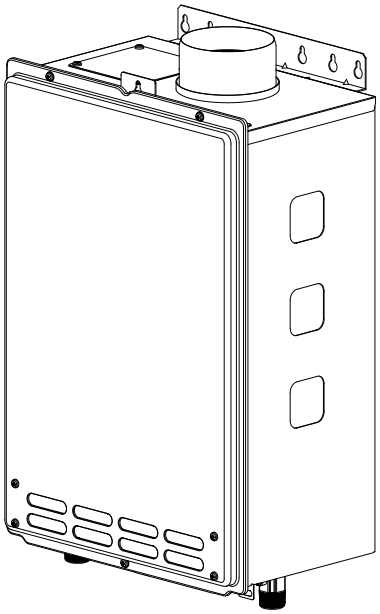

510 Indoor

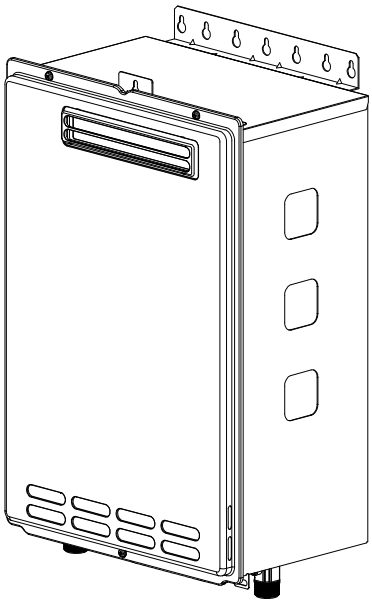

510 Outdoor

A.O. Smith Water Products Company
500 Tennessee Waltz Parkway
Ashland City, TN 37015
Toll Free: 1-877-737-2840

Table of Contents

1. Specifications..... 3
2. Exterior view..... 4
3. Interior view..... 6
4. List of main components in the interior view..... 8
5. Schematic diagram..... 10
6. Wiring diagram..... 11
7. Wiring diagram checkpoints for diagnosis..... 12
8. Resistance values of the temperature thermistors..... 14
9. Operational flow chart..... 15
10. Component specifications..... 16
11. Fault Analysis & Specifications..... 36
12. Controls and settings..... 46
13. Components diagrams..... 70
14. Parts list..... 73
15. Revisions..... 77

1. Specifications of the 510 Direct Vent Indoor* and Outdoor

Model			510 Indoor	510 Outdoor
Dimensions			H20.5"×W13.8"×D8.5"	
Weight			39 lbs.	
Combustion	INPUT BTU/h	Max	199,000	
		Min	11,000	
	Combustion System		Power vent	
	Installation		Indoor & Direct-vent	Outdoor
	Fan motor		PWM turbo fan	PWN multi blade fan motor
	Manifold Pressure*	Max	LP 3.5” WC Natural 2.0” WC	LP 4.4” WC Natural 2.8” WC
		Min	LP 0.7” WC Natural 0.4” WC	LP 0.9” WC Natural 0.5” WC
Water control	Flow rate		0.75 to 10.0 GPM	
	Available set temperatures		99 to 185°F default: 122°F	
	Temperature dipswitch settings		104°F, 113°F, 122°F, 131°F, 140°F, 158°F, 176°F, 185°F	
	Bypass valve		Yes	
	Thermistors		3 thermistors (In, Out, Mixing)	
Operation	Remote controller model		9007603005	
	PCB model		510	
	Indicators		Red LED on PCB during operation & 7-SEG LED	
	Power supply control		Surge absorber & Power ON-OFF switch	
Features	Freeze protection		Ceramic heaters and Auto-firing system	
	Self-combustion improvement		Air-Fuel Ratio Detection System	
	Easy-Link system		Yes (Up to 4 units)	
	Multiple-system		N/A	

*The 510 Direct Vent Indoor means the 510 Indoor in the text.
**The manifold pressure measurement is based on conditions without front cover.

2. Exterior view

510 Indoor

Side view

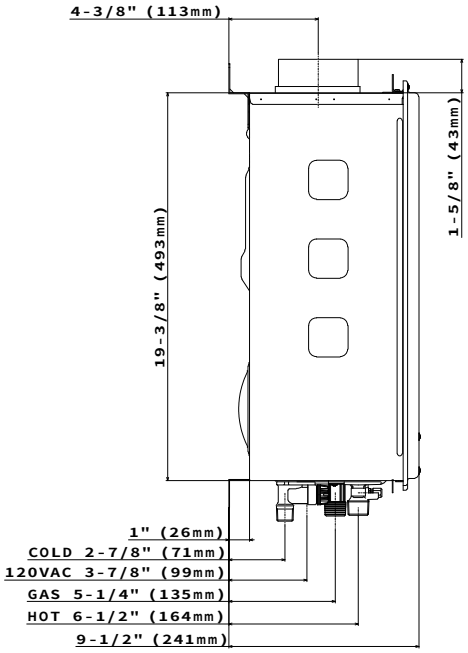

Front view

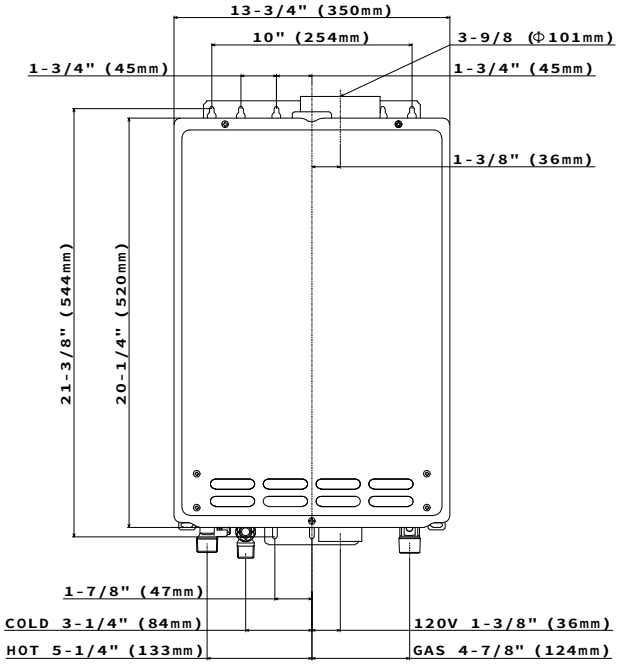

Top view

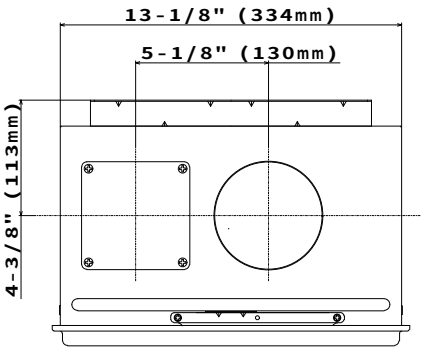

Bottom view

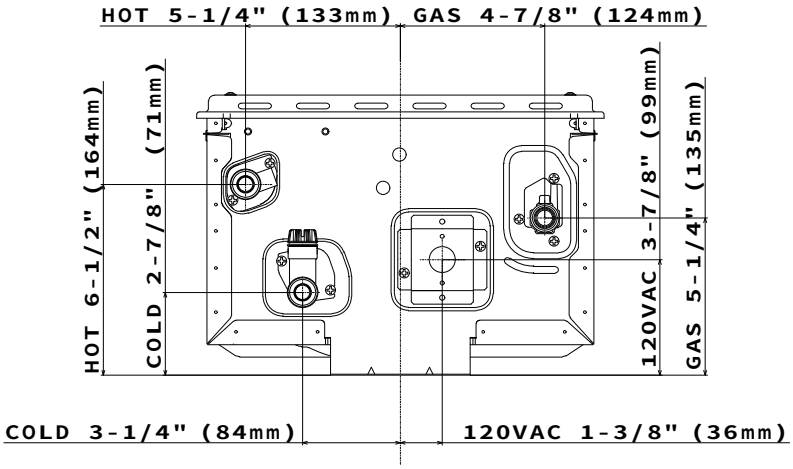

510 Outdoor

Side view

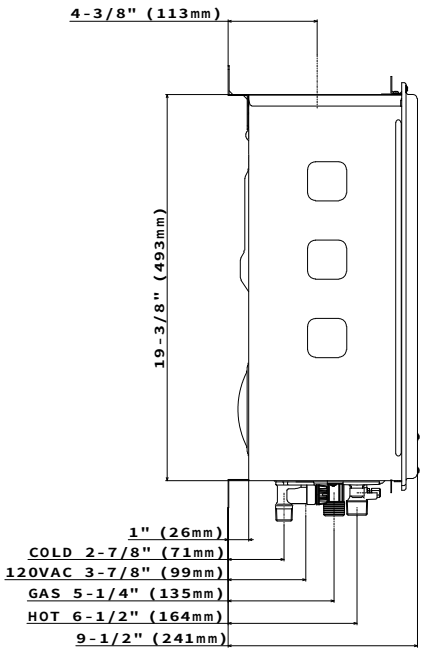

Front view

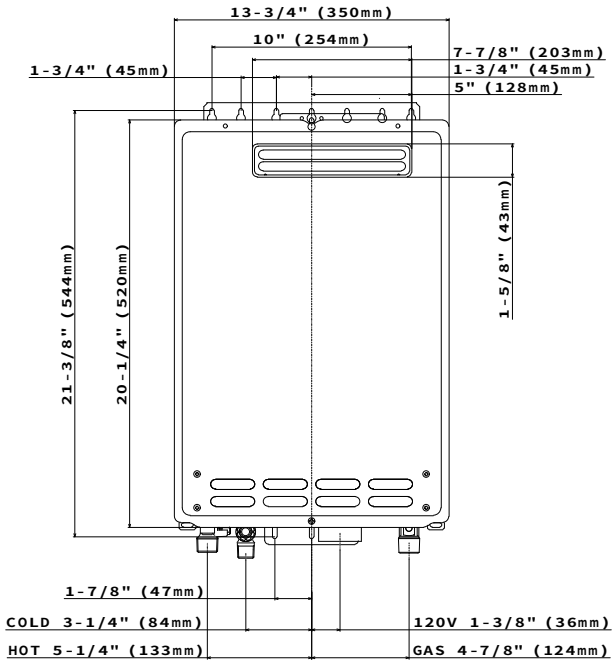

Top view

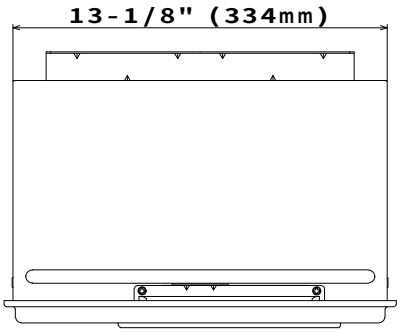

Bottom view

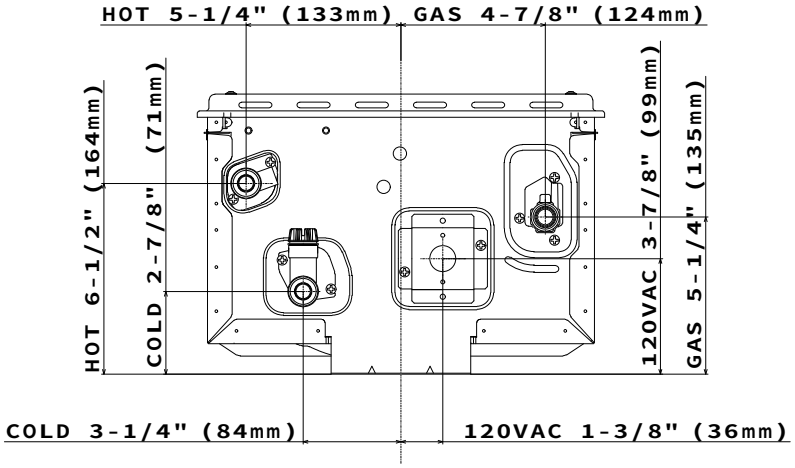

3. Interior view

510 Indoor

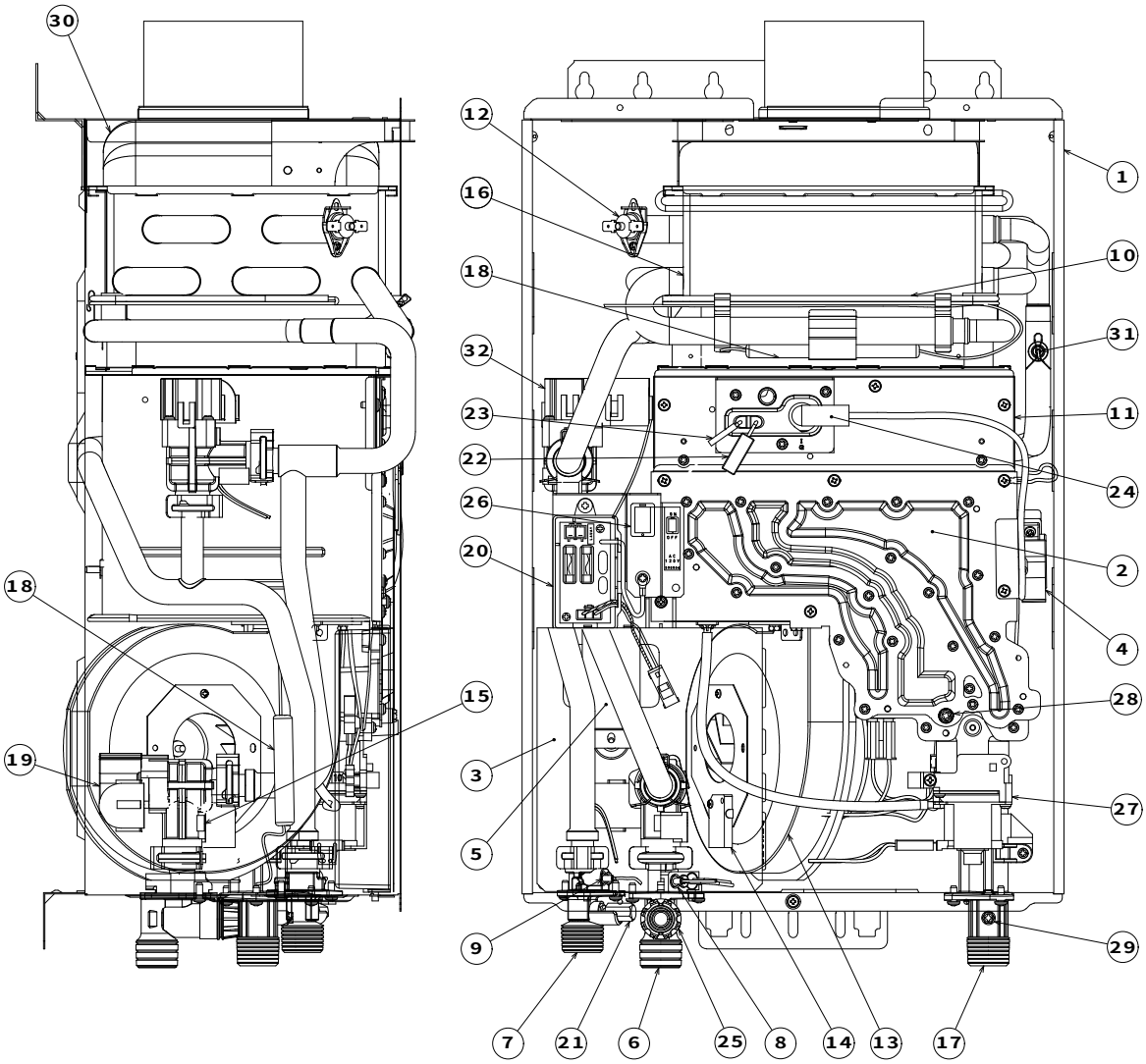

510 Indoor

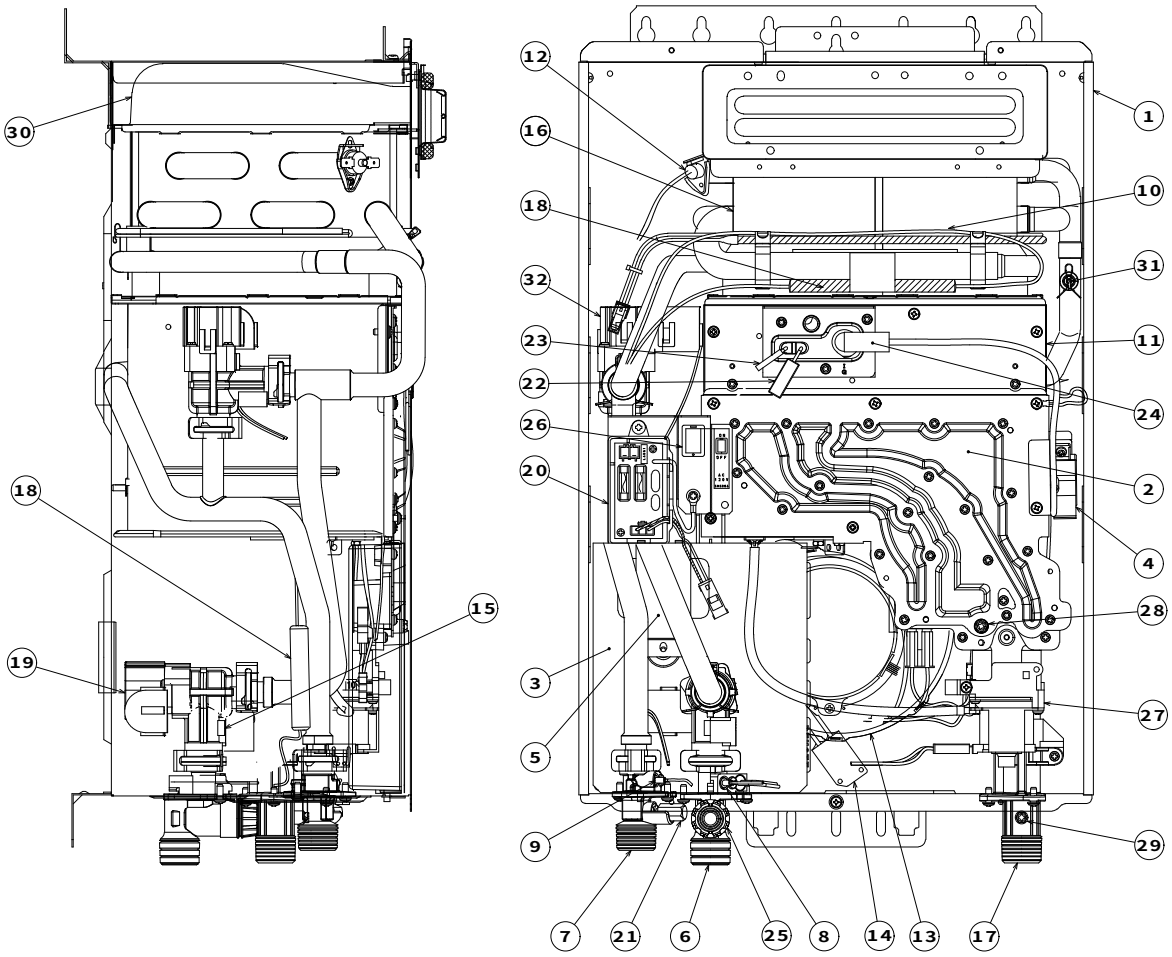
30
18
19
15
12
16
18
32
23
22
26
20
3
5
9
7
21
6
25
8
14
13
17
1
10
31
11
24
2
4
28
27
29

4. List of main components in the interior view

No.	Description	Items# in components diagram	AOS Part #	Common parts for other models
1	**Case assembly**	**001**	**319143-151 (510 Indoor)**	
			319143-211 (510 Outdoor)	
2	**Manifold assembly with gas valve assembly**	**102**	**319143-046 (LP model)**	
			319143-368 (NA model)	
3	Computer board	701	319143-179	
4	Igniter	711	319143-052	110, 310, 710, 910, 520
5	Transformer	702	319143-182	110, 310
6	Water inlet	404	319143-193	110, 310
7	Water outlet	409	319143-194	110, 310
8	Inlet thermistor	407	319143-085	
9	Mixing thermistor	408	319143-190	
10	Overheat cut-off fuse	413	319143-149	110, 310, 910
11	Burner assembly (Burners)	101	319143-030	
12	Hi-limit switch	412	319143-095	
13	**Fan motor**	**103**	**319143-043 (510 Indoor)**	
			319143-217 (510 Outdoor)	**310**
14	**Freeze protection thermostat**	**713**	**319143-185 (510 Indoor)**	
		710	**319143-210 (510 Outdoor)**	**110, 310**
15	Flow sensor	402	319143-178	
16	**Heat exchanger assembly**	**401**	**319143-369 (510 Indoor)**	
			319143-177 (510 Outdoor)	
17	Gas inlet	118	319143-050	110, 310, 520
18	Heater	414	319143-200	110, 310
19	Flow adjustment valve	402	319143-178	
20	Surge box	703	319143-168	110, 310

No.	Description	Items# in components diagram	AOS Part #	Common parts for other models
21	Outlet drain plug	410	319143-199	110, 310, 910
22	Air-fuel ratio rod (AFR rod)	108	319143-035	
23	Flame rod	108	319143-035	
24	Igniter rod	109	319143-037	
25	Inlet drain plug (water filter)	405	319143-197	110, 310
26	120 VAC Power ON-OFF switch	706	319143-141	110, 310, 520
27	**Gas valve assembly**	**Included in #102**	**319143-046 (LP model)**	
			319143-368 (NA model)	
28	Manifold port	N/A	N/A	
29	Gas inlet port	N/A	N/A	
30	**Exhaust chamber**	**Included in #401**	**319143-369 (510 Indoor)**	
			319143-177 (510 Outdoor)	
31	Output thermistor	411	319143-096	
32	Bypass valve	403	319143-186	

5. Schematic diagram

The diagram below refers to both the 510 Indoor and 510 Outdoor.

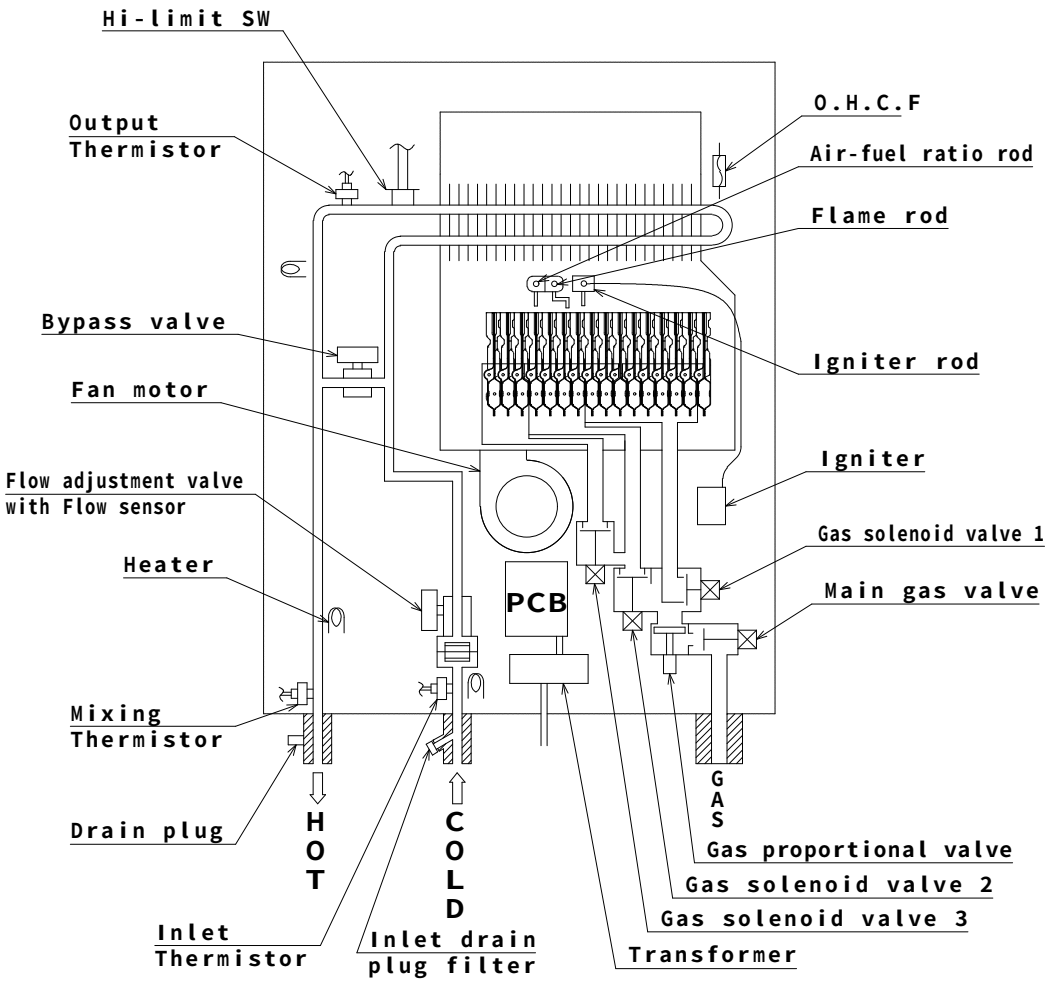

1. When a hot water tap is opened, cold water enters the 510 Indoor or 510 Outdoor.
2. The water flow sensor detects this water flow and sends this information to computer.
3. The computer initiates fan motor and sends signal to igniter to create ignition spark.
4. The main, proportional, and solenoid gas valves open to allow gas input.
5. The gas ignites and flames appear inside the burner chamber.
6. Water circulates through the heat exchanger and is heated up to the set temperature.
7. Using thermistors to measure temperatures, the computer modulates the gas and water valves to ensure proper output water temperatures.
8. When the tap is closed, the 510 Indoor or 510 Outdoor shuts down.

6. Wiring diagram

The diagram below refers to both the 510 Indoor and 510 Outdoor.

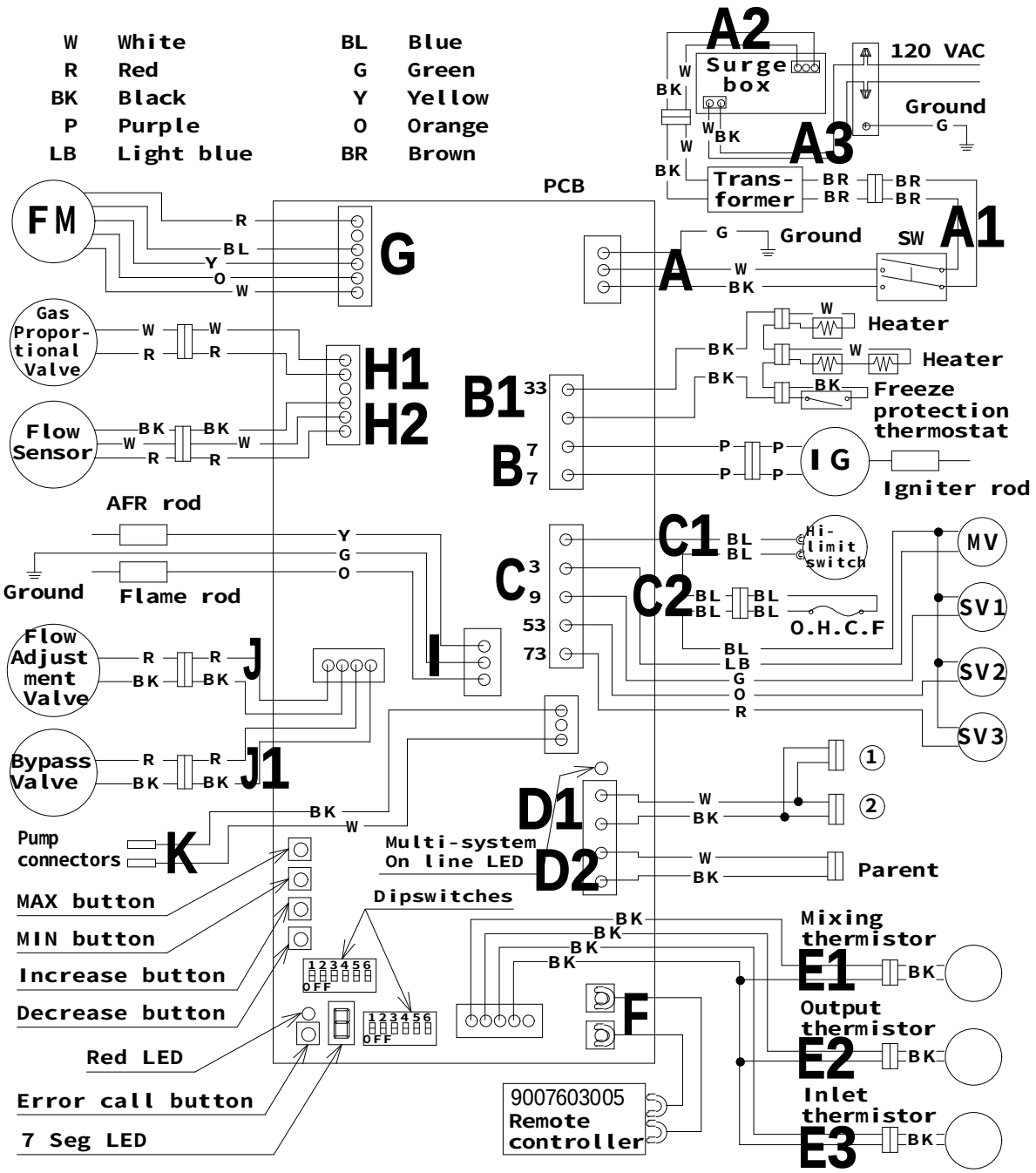

7. Wiring diagram check points for diagnosis

The table below applies to both the 510 Indoor and 510 Outdoor.

Check-point	Part and Description	Color of wires	Normal range
A, A1	100V Power supply	White – Black (A) Brown – Brown (A1)	90 to 110 VAC
A2, A3	120V Power supply	Black - White	108 to 132 VAC
B	Igniter	Purple - Purple	90 to 110 VAC
B1	Heater	Black - Black	90 to 110 VAC
C	Gas valves	Light blue - blue at COM (MV)	78 to 100 VDC (during operation) / 0.9 to 1.3 kΩ
		Green - blue at COM (SV1)	78 to 100 VDC (during operation) / 1.3 to 1.9 kΩ
		Orange - blue at COM (SV2)	78 to 100 VDC (during operation) / 1.3 to 1.9 kΩ
		Red - blue at COM (SV3)	78 to 100 VDC (during operation) / 0.9 to 1.7 kΩ
C1	Hi-limit switch	Blue - Blue	Less than 1 VDC and less than 1.0 Ω
C2	Overheat cutoff fuse	Blue - Blue	Less than 1 VDC and less than 1.0 Ω
D1,D2	Easy-link connectors	Black - White	15 VDC (during Easy-link operation)
E1	Mixing thermistor	Black - Black	See table on p. 11
E2	Output thermistor	Black - Black	
E3	Inlet thermistor	Black - Black	
F	Remote controller	*	11 to 25 VDC
G	Fan motor	Red - Blue	110 to 160 VDC
		Yellow - Blue	13 to 17 VDC
		Orange - Blue	2 to 6.5 VDC

Check-point	Part and Description	Color of wires	Normal range
H1	Gas proportional valve	White - red	1 to 15 VDC (during operation) and 20 to 40 Ω
H2	Flow sensor	Red - Black	4 to 5.5 VDC
		White - Black	1 to 4 VDC (pulse) 1,080 pulse / min (more than 18 Hz)
I	Air-fuel ratio rod	Yellow - AFR rod (Between AFR rod and the computer board)	More than 0.5 μA (during operation)
	Flame rod	Orange - Flame rod (Between flame rod and the computer board)	More than 1 μA (during operation)
J	Flow adjustment valve	Red - Black	7 to 16 VDC and 0.09 to 0.2 kΩ
J1	Bypass valve	Red - Black	7 to 16 VDC and 0.09 to 0.2 kΩ
K	Pump connector port	White - Black	Less than 1.3 Ω

8. Resistance values of the temperature thermistors

The 510 Indoor and 510 Outdoor use the same thermistors.

Resistance values at different temperatures

Temperature	ºF	32	41	50	59	68	77	86	95	104	113
	ºC	0	5	10	15	20	25	30	35	40	45
Resistance	kΩ	23.76	19.08	15.43	12.56	10.28	8.47	7.02	5.85	4.90	4.12

Temperature	ºF	122	131	140	149	158	167	176	185	194	203	212
	ºC	50	55	60	65	70	75	80	85	90	95	100
Resistance	kΩ	3.49	2.96	2.53	2.16	1.86	1.60	1.39	1.21	1.05	0.92	0.81

Temperature(ºF) vs. Resistance(kΩ)

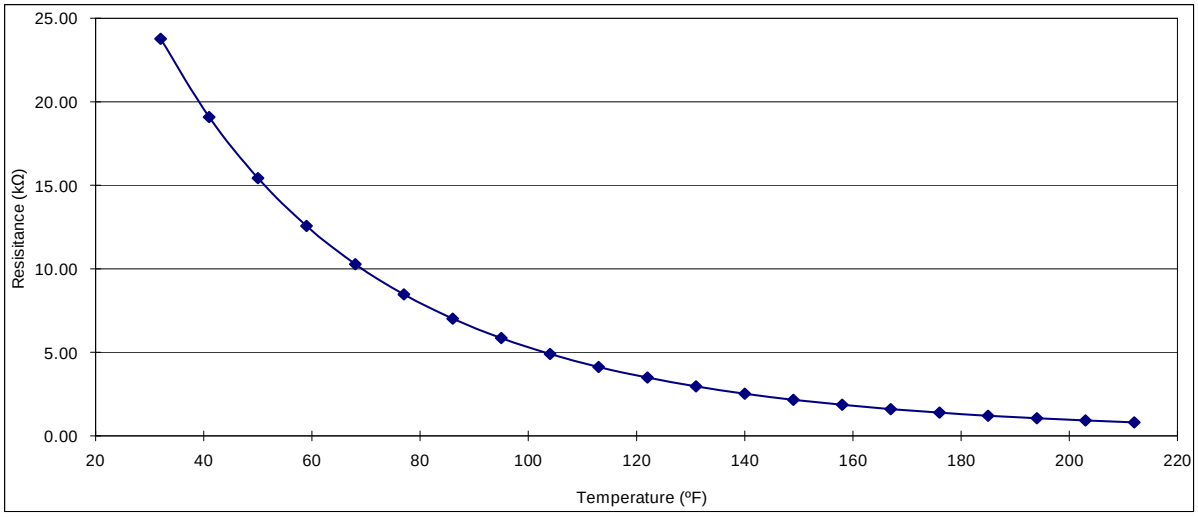

Temperature(℃) vs. Resistance(kΩ)

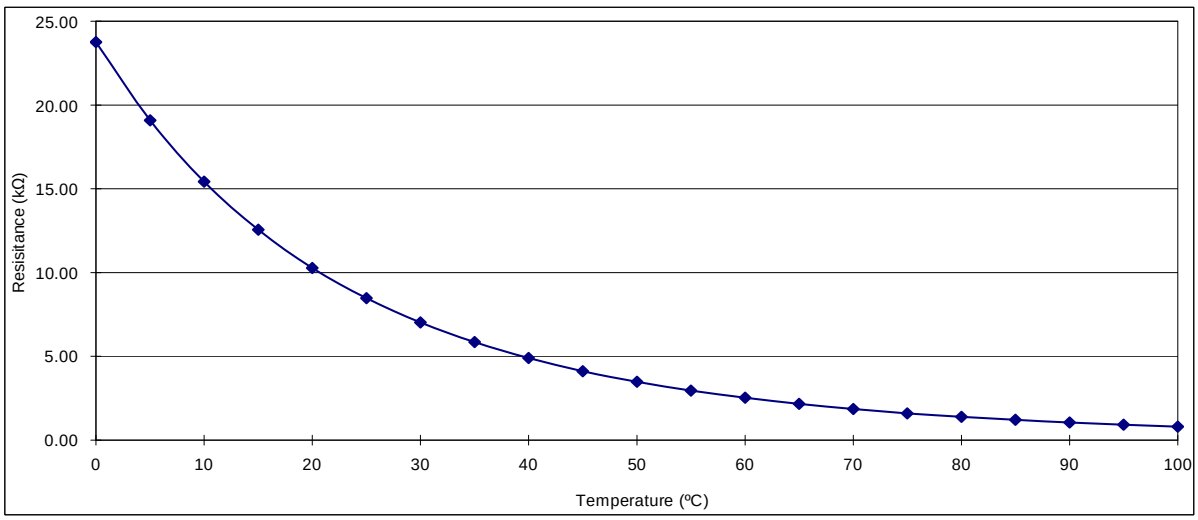

9. Operational flow chart

The diagram below refers to both the 510 Indoor and 510 Outdoor.

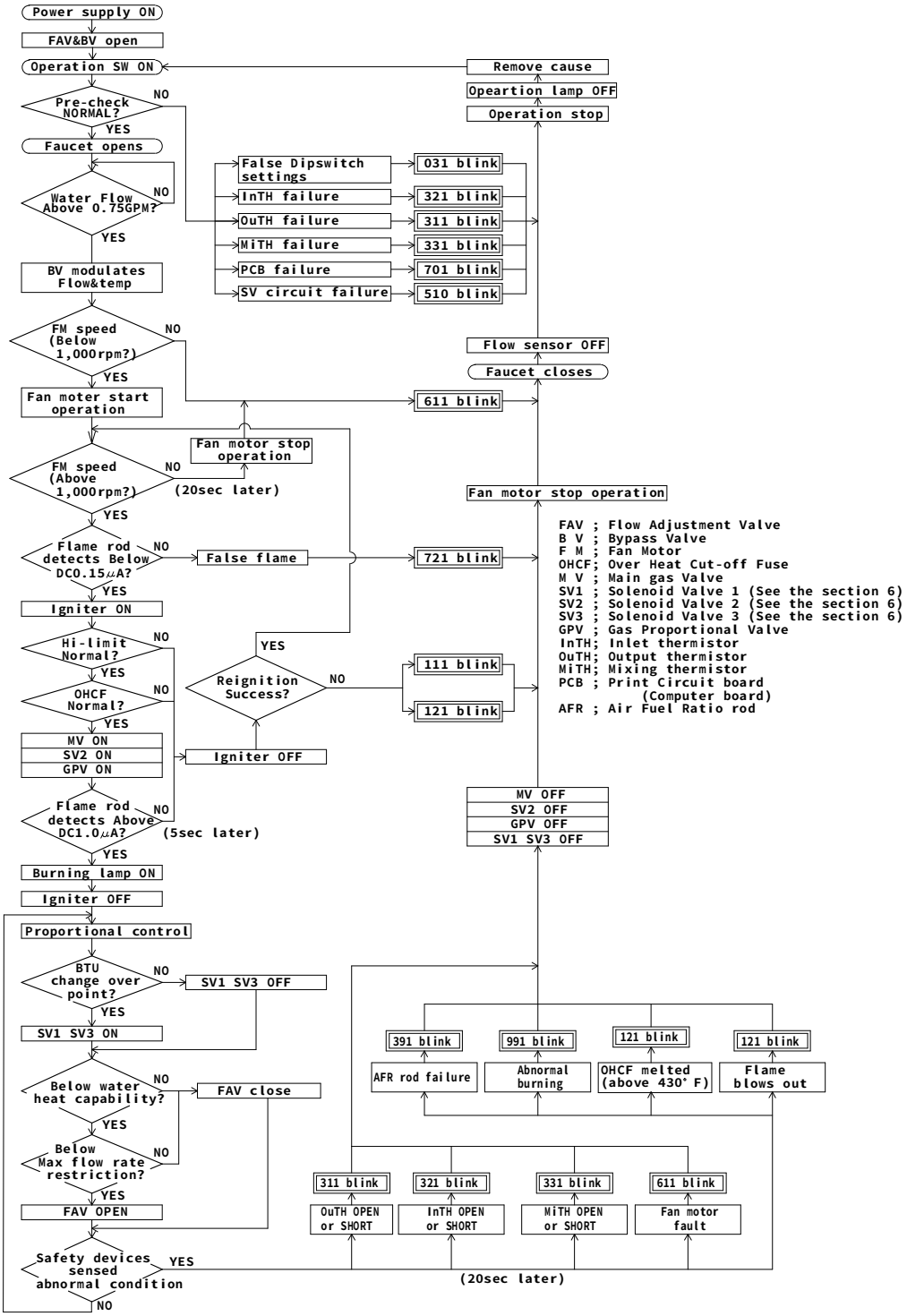

10. Component specifications

10-1. Burners..... 17
10-2. Gas manifold..... 18
10-3. Fan motor..... 19
10-4. Gas valve assembly..... 20
10-5. Flame rod..... 21
10-6. AFR rod..... 22
10-7. Heat exchanger..... 23
10-8. Flow adjustment valve..... 24
10-9. Flow sensor..... 25
10-10. Bypass valve..... 26
10-11. Thermistors..... 27
10-12. Hi-limit switch..... 28
10-13. Overheat cutoff fuse..... 29
10-14. Freeze protection heaters..... 30
10-15. Computer board..... 31
10-16. Transformer. 32
10-17. Igniter..... 33
10-18. Freeze protection thermostat..... 34
10-19. Surge box..... 35

10-1. Burners

Unit Part #	#101	**AOS Part #**	319143-030	**Checkpoint**	**N/A**
Function	There are 2 types of burners in the water heater: the gas-rich burner stabilizes the flames within the combustion chamber and the air-rich burner produces more heat in the combustion chamber. The burners facilitate the air/gas mixture necessary to produce the proper heat during the combustion reaction.				
Failure events	1. Unable to initialize/sustain combustion. 2. Dust or soot deposit on the burner surface. 3. Cracks on the burners. 4. Gas leakage from the burners.				
Effects on the water heater if burners fails	1. Unexpected combustion. 2. Unstable flame conditions and/or flame loss. 3. Ignition failure. 4. Back-firing.				
Error codes when the burners fails	**101**	**111**	**121**	**991**	
Diagnostic	Visual inspection: excessive dust deposit on the burner surface and/or unstable flame conditions during operation.				
Color/Number of wires	**N/A**				

The burner for the 510 Indoor and 510 Outdoor has the “46V” mark as shown below.

Burner damper (#112 / 319143-156)

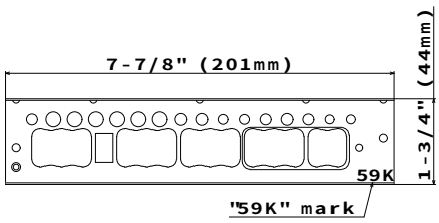

The burner damper is not included in 319143-030.

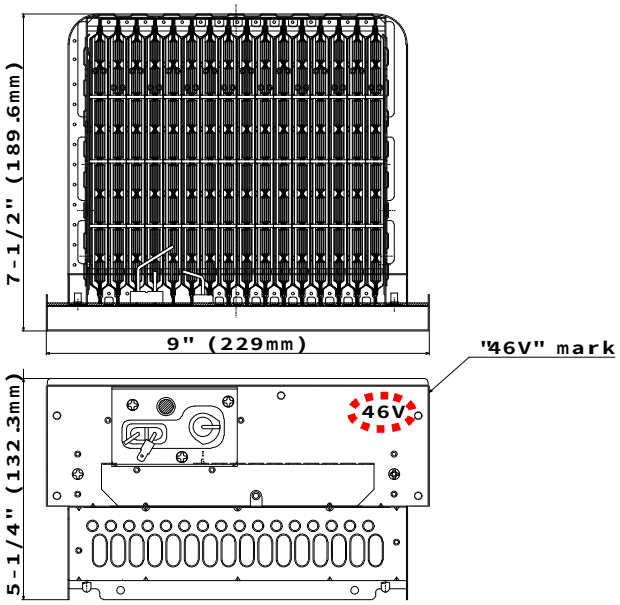

10-2. Gas manifold

Unit Part #	Included in #102	**AOS Part #**	319143-046 (LP) 319143-368 (NA)	**Checkpoint**	**N/A**
Function	1. The manifold distributes gas from the gas valves to the burners. The manifold has two types of the nozzles: one type for gas-rich burners (16 nozzles) and the other for air-rich burners (15 nozzles) 2. There are 3 zones within the manifold, to ensure efficient combustion operation.				
Failure events	1. Dust deposit on the manifold. 2. Gas leakage from a failed manifold. 3. Ignition failure. 4. Imperfect combustion.				
Effects on the water heater if the manifold fails	1. The burners cannot receive proper gas flow from the manifold, which can cause poor combustion in the combustion chamber. In this case, the AFR rod will detect an improper flame condition and computer will take safety measures. 2. Gas leakage from the manifold.				
Error codes when the manifold fails	**101**	**111**	**121**	**991**	
Diagnostic	1. Visual inspection: Excessive dust deposit around the nozzles or cracks on the manifold. 2. Check voltages and resistance: proper range of values shown below.				
Color/Number of wires	Blue-Red		78 to 100 VDC / 0.9 to 1.7 kΩ		

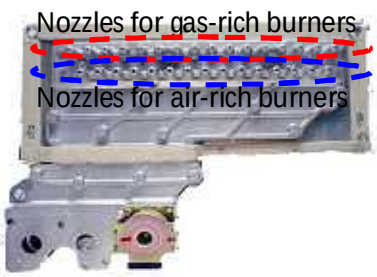

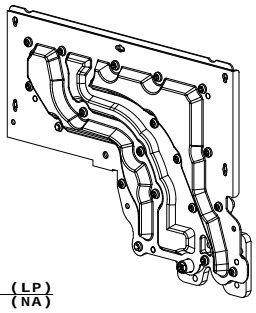

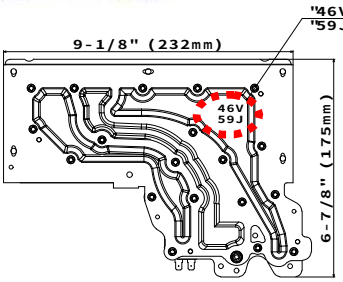

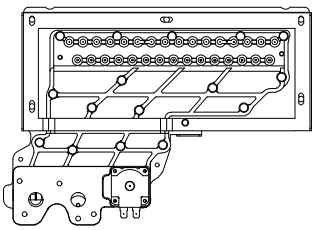

319143-046 (for LP model) and 319143-368 (for NA model) is an assembly of the gas manifold with the gas valve assembly. For safety reasons, these assemblies should be installed in the unit as a whole set.
The gas manifold for the LP has the “46V” mark, and the gas manifold for the NA has the “59J” mark on the manifold plate.

10-3. Fan motor

Unit Part #	#103	**AOS Part #**	319143-043 (510 Indoor) 319143-217 (510 Outdoor)	**Checkpoint**	**G**
Function	To provide combustion air into the combustion chamber and to exhaust flue gas.				
Failure events	1. Fan speed failure, causing abnormal sounds with or without combustion during operation. 2. Unexpected activation caused by the connectors of the fan motor getting wet. 3. Disconnects from the bottom of the combustion chamber.				
Effects on the water heater if fan motor fails	1. The water heater does not function properly. 2. Failure to ignite or abnormal ignition. 3. Unstable combustion conditions.				
Error codes when the fan motor fails	**101**	**111**	**121**	**611**	**991**
Diagnostic	1. Visual inspection: connection/breakage of wires or dust (causing electrical shortage) 2. Voltage check: proper range of voltages shown below.				
Color/Number of wires	Red-Blue	110 to 160 VDC (Input)			
	Yellow-Blue	13 to 17 VDC (Input)			
	Orange-Blue	2.0 to 6.5 VDC (Input)			
	White-Blue	Verify the fan motor speed using the Diagnostics Mode of the9007603005 temperature remote controller. See Section 12-1 for details.			

510 Indoor

PWN turbo fan motor

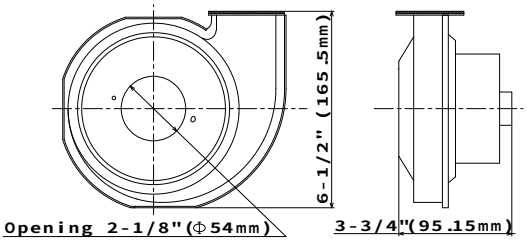

Fan damper (#115 / 319143-367)

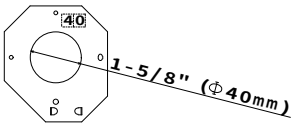

The fan damper is not included in 319143-043.

510 Outdoor

PWN multi blade fan motor

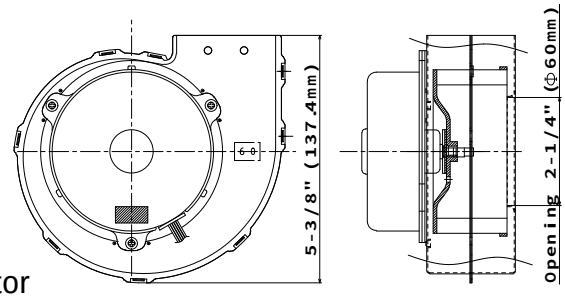

10-4. Gas valve assembly

Unit Part #	Included in #102	**AOS Part #**	319143-046 (LP) 319143-368 (NA)	**Checkpoint**	**C,H1**
Function	Opens and closes the gas pathways of the water heater (main and solenoid gas valves)				
	Modulates the gas flow from the gas inlet (proportional gas valve)				
Failure events	1. Gas leak from the valves. 2. Unable to open/close (main and solenoid gas valves) 3. Unable to modulate the gas flow (proportional gas valve)				
Effects on the water heater if valves fails	1. Gas leak from the unit. 2. Excess carbon monoxide emissions. / No flames. 3. Lack of water temperature control.				
Error codes when the valves fails	**111**	**121**	**510**	**701**	
Diagnostic	1. Visual inspection: connection/breakage of wires. 2. Listen for "clunk" sounds from the gas valves opening right after fan motor initiates. 3. Check voltages and resistance of coils; proper range of values shown below.				
Color/Number of wires	Blue - Light blue (MV)	78 to 100V DC (during operation) / 0.9 to 1.3 kΩ			
	Blue - Green (SV_1)	78 to 100V DC (during operation) / 1.3 to 1.9 kΩ			
	Blue - Orange (SV_2)	78 to 100V DC (during operation) / 1.3 to 1.9 kΩ			
	Blue - Red (SV_3)	78 to 100V DC (during operation) / 0.9 to 1.7 kΩ			
	White - Red (Proportional valve)	1.0 to 15 VDC (during operation) / 20 to 40 Ω			

319143-046 (for LP model) and 319143-368 (for NA model) is an assembly of the gas manifold with gas valve assembly. For safety reasons, these assemblies should be installed in the unit as a whole set. The diagram below shows the gas valve assembly.

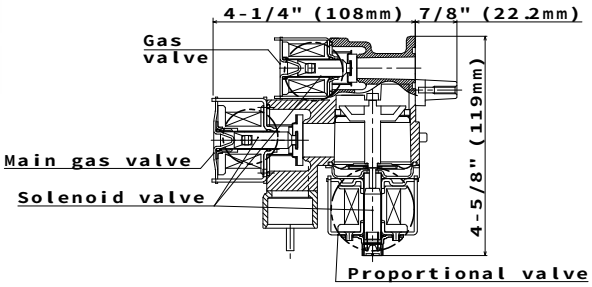

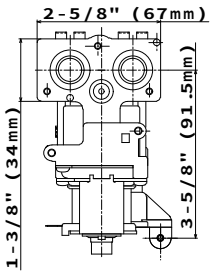

10-5. Flame rod

Unit Part #	#108	**AOS Part #**	319143-035	**Checkpoint**	**I**
Function	To detect flames while the water heater is in operation.				
Failure events	1. Unable to detect flames when flames actually do occur. 2. Detecting a false flame when no flames actually occur.				
Effects on the water heater if flame rod fails	1. The water heater stops operating. The "111" and/or "121" error code(s) will display. 2. The water heater will not initiate the ignition process. The "721" error code will display.				
Error codes when the flame rod fails	**111**	**121**	**721**		
Diagnostic	1. Visual inspection: connection / breakage of wires or soot buildup on rod. 2. Check Amperes: proper range of values shown below.				
Color/Number of wires	Orange(17) - Flame rod (Between flame rod and the computer board)	(During operation) More than DC 1 μA			

The flame rod is assembled with the AFR rod.

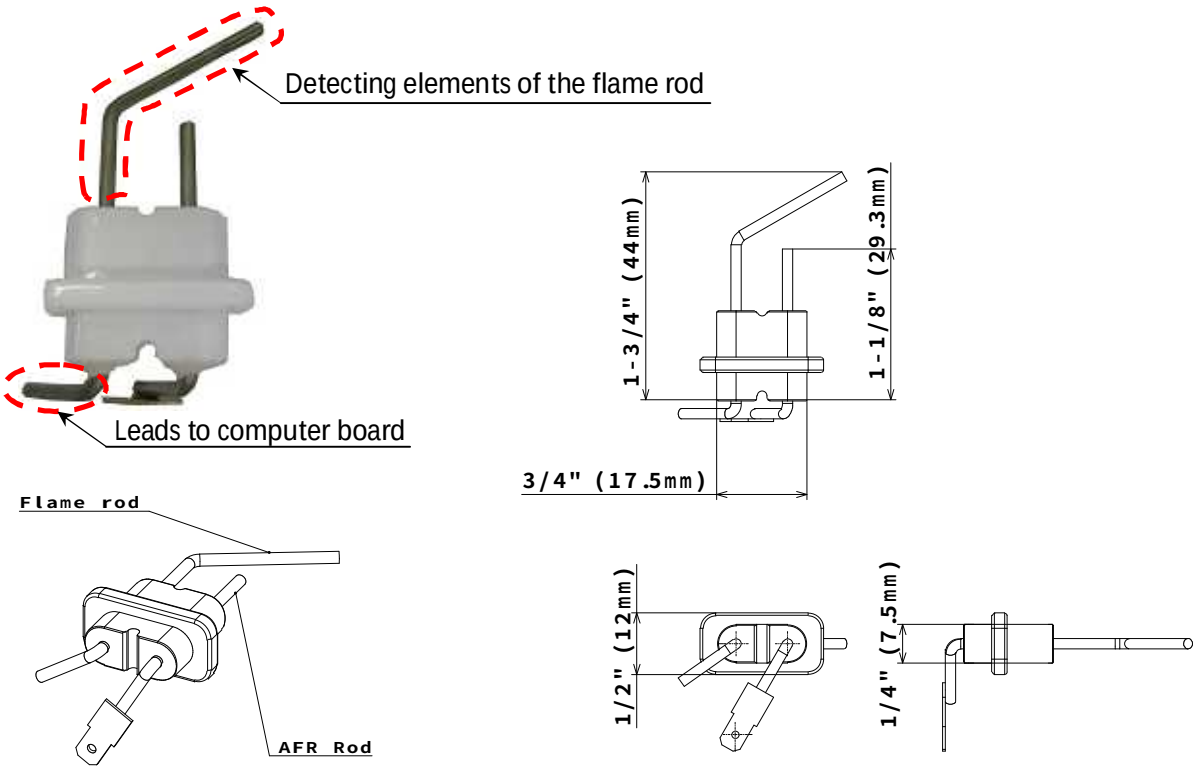

10-6. AFR rod

Unit Part #	#108	**AOS Part #**	319143-035	**Checkpoint**	**I**
Function	-Checks flame conditions during combustion. -When AFR rod detects unexpected flame conditions, the computer of the water heater makes adjustments in the fan motor speed to compensate.				
Failure events	1. Unable to detect flames when flames actually do occur 2. Detecting a false flame when no flames actually occur				
Effects on the water heater if AFR rod fails	1. The water heater will not initiate the ignition process. The "721" error code will display. 2. The fan motor speed cannot be modulated properly under abnormal flame conditions, which can result in excessive CO emission.				
Error codes when the AFR rod fails	**101**	**391**	**991**		
Diagnostic	1. Visual inspection: connection/braking of wires, soot on it. 2. Check voltages: proper range of values are shown below.				
Color/Number of wires	Yellow(8) - AFR rod (Between AFR rod and the computer board)	(During operation) More than DC 0.5 μA			

The AFR rod is assembled with the flame rod.

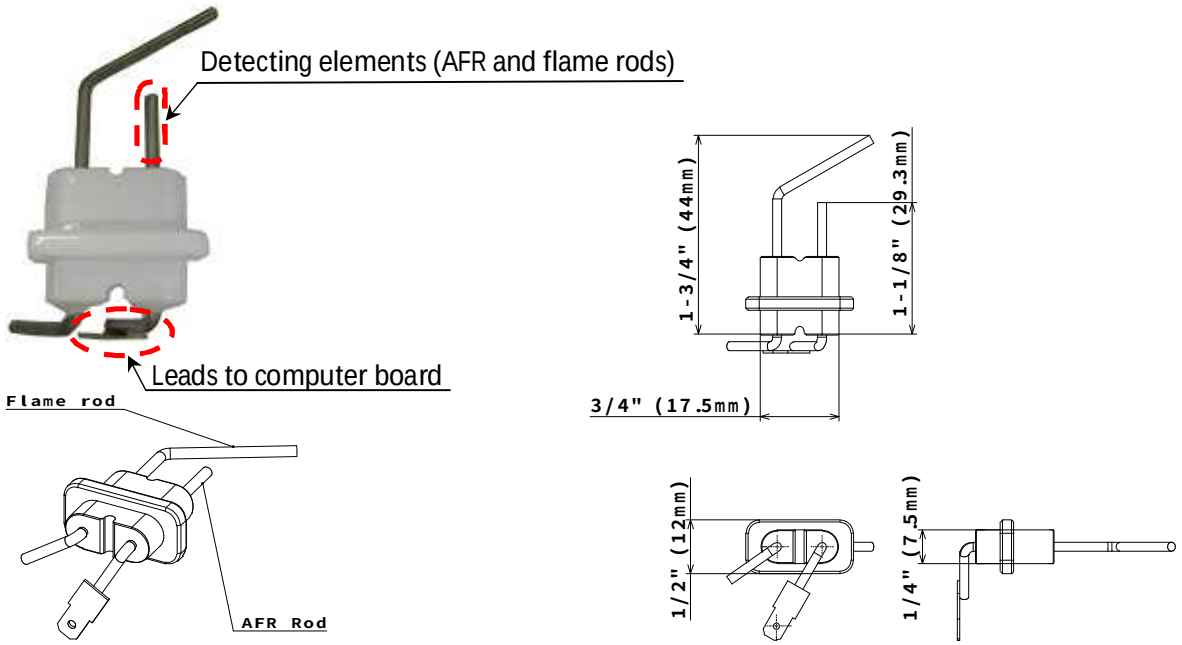

10-7. Heat exchanger

Unit Part #	#401	**AOS Part #**	319143-369 (510 Indoor) 319143-177 (510 Outdoor)	**Checkpoint**	**N/A**
Function	Absorbs heat from combustion and transfer it to water through the heat exchanger pipes.				
Failure events	1. Clogged heat exchanger fins and/or cracks on the heat exchanger walls. 2. Leaking exhaust gas. 3. Improper heat transfer can cause the water in heat exchanger to boil.				
Effects on the water heater if the heat exchanger fails	1. Water leakage from the heat exchanger. 2. Exhaust gas leakage (if this occurs, an overheat cutoff fuse is in place to detect this event and immediately stop the water heater from operating) 3. Abnormal sounds during combustion .				
Error codes when the heat exchanger fails	**N/A**				
Diagnostic	1. Visual inspection: soot deposits, cracks on the heat exchanger walls, and/or water leakage from the heat exchanger. 2. In the event of abnormal sounds during combustion: A. Inspect for soot buildup inside the heat exchanger. B. Inspect for scale buildup inside the heat exchanger pipes. Scale buildup obstructs proper heat transfer to the water, thereby overheating the heat exchanger and causing damage.				
Color/Number of wires	**N/A**				

The heat exchanger of the 510 Indoor and 510 Outdoor has the “Pro” mark as shown below.

510 Indoor

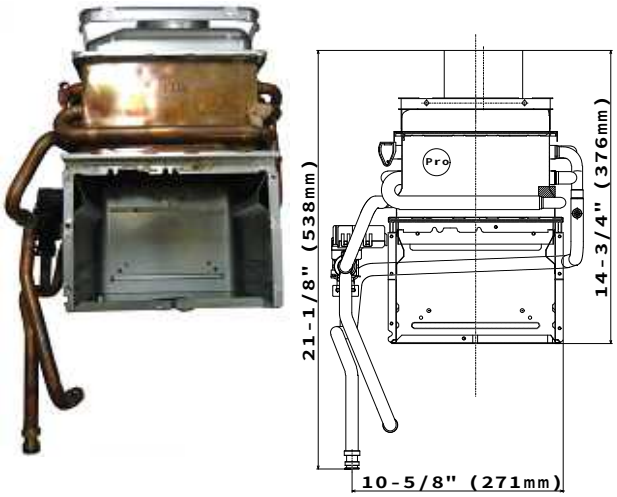

510 Outdoor

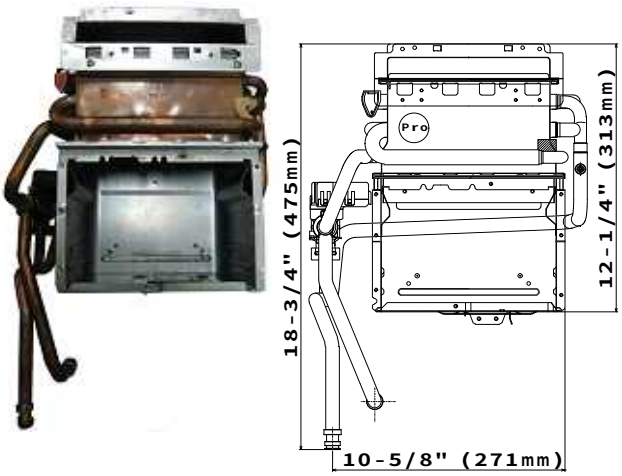

10-8. Flow adjustment valve

Unit Part #	#402	**AOS Part #**	319143-178	**Checkpoint**	J
Function	Controls water flow to properly control the output hot water temperature.				
Failure events	1. Water leakage from valve. 2. The valve cannot modulate or make open/close positions.				
Effects on the water heater if flow adjustment valve fails	1. Water leakage from failed valve can damage other water heater components. 2. Temperature fluctuations in the hot water output. 3. Within an Easy-Link system, the “651” error code can occur.				
Error codes when flow adjustment valve fails	**651 (only within Easy-Link systems)**				
Diagnostic	1. Visual inspection: connection/breakage of wires, motor drive locked due to scale buildup, and/or water leakage. 2. Check voltages and resistance; proper range of values shown below.				
Color/Number of wires	Black - Red 7 to 16V DC and 0.09 to 0.2 kΩ				

The flow adjustment valve is assembled with the flow sensor.

Flow adjustment valve

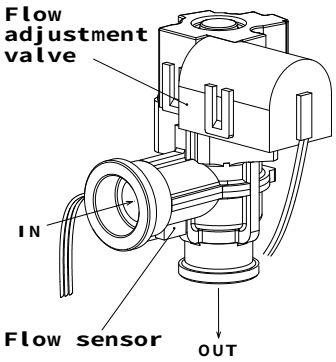

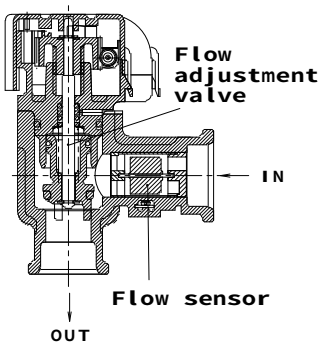

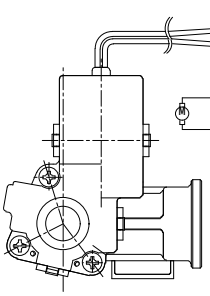

	1	2	3
Close	-		+
Open	+		-

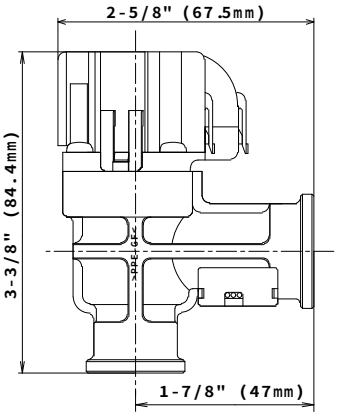

10-9. Flow sensor

Unit Part #	#402	**AOS Part #**	319143-178	**Checkpoint**	**H2**
Function	Detects and measures water flow rate using a spinning impeller and magnetic pick-up.				
Failure events	Unable to detect or measure any water flow rate.				
Effects on the water heater if flow sensor fails	Ignition sequence does not start (water heater will not initiate any operation)				
Error codes when flow sensor fails	**441 (only within Easy-Link systems)**				
Diagnostic	1. Visual inspection: connection/breakage of wires and/or debris on impeller. 2. Check voltages: proper range of values shown below.				
Color/Number of wires	Red - Black	4.0 to 5.5V DC (Input)			
	White(85) -Black	1.0 to 4.0V DC (pulse) 1,080 pulse/min (more than 18 Hz)			

The flow sensor is assembled with the flow adjustment valve.

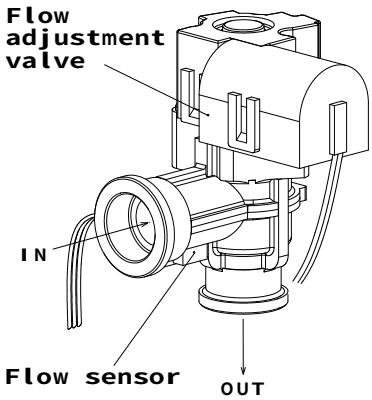

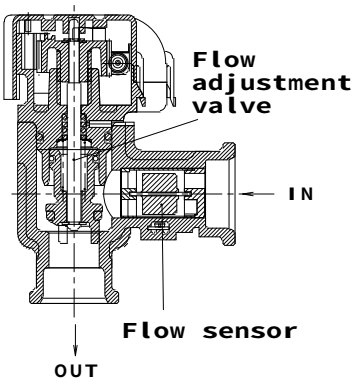

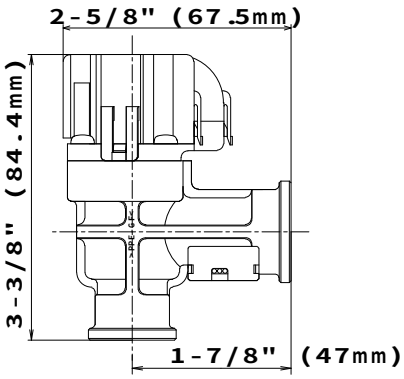

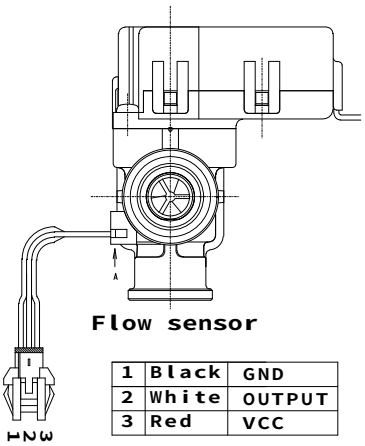

1	Black	GND
2	White	OUTPUT
3	Red	VCC

10-10. Bypass valve

Unit Part #	#403	**AOS Part #**	319143-186	**Checkpoint**	**J1**
Function	1. Mixes hot water from the heat exchanger with cold water from the water inlet in order to modulate and control the water heater's outlet water temperature. 2. Keeps the water temperature in the heat exchanger stable, preventing low-temperature corrosion by reducing condensation buildup in heat exchanger.				
Failure events	1. Water leakage from valve. 2. The valve cannot modulate properly.				
Effects on the water heater if bypass valve fails	1. Water leakage from failed valve can damage other water heater components. 2. Temperature fluctuations in the hot water output.				
Error codes when bypass valve fails	**N/A**				
Diagnostic	1. Visual inspection: connection/breakage of wires. 2. Check voltages and resistance: proper range of values shown below.				
Color/Number of wires	Red - Black 7 to 16 VDC and 0.09 to 0.2 kΩ				

The physical appearance of the bypass valve is similar to that of the flow adjustment valve. However, their functions differ and cannot be substituted for each other.

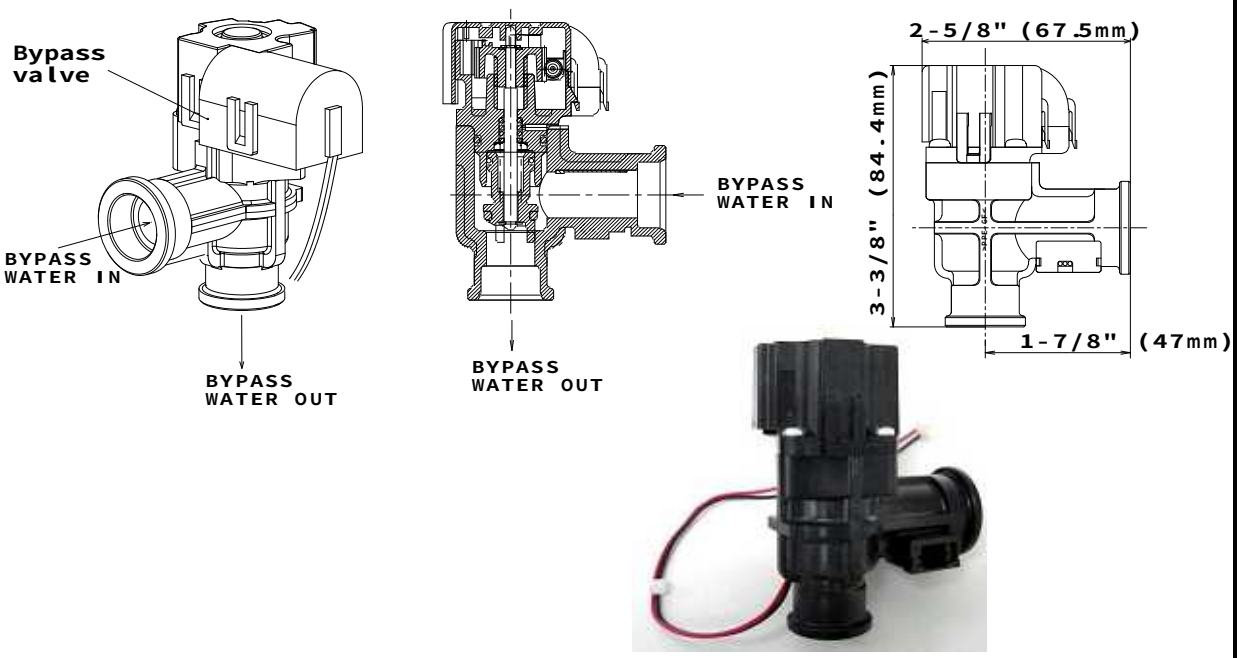

10-11. Thermistors

Unit Part #	#407 (Inlet) #408 (Mixing) #411 (Output)	**AOS Part #**	319143-085 (Inlet) 319143-190 (Mixing) 319143-096 (Output)	**Checkpoint**	**E1 (Mixing)** **E2 (Output)** **E3 (Inlet)**
Function	Measures cold/hot water temperatures in the water heater.				
Failure events	Unable to properly measure water temperatures within the water heater.				
Effects on the water heater if thermistor fails	If the thermistors fail open or short, error code appears before starting operation. If resistance values are just off, The water heater will have temperature fluctuations in hot water.				
Error codes when thermistors fails	**311 (Output)**		**321 (Inlet)**		**331 (Mixing)**
Diagnostic	1. Visual inspection: connection/breakage of wires and/or debris on thermistor. 2. Check voltages and resistance; proper range of values shown below.				
Color/Number of wires	Inlet Black(42)-Black Output Black(12)-Black Mixing Black(113)-Black		68˚F (20°C) 9.0 to 13 kΩ 122˚F (50°C) 3.3 to 4.4 kΩ 176˚F (80°C) 1.4 to 1.8 kΩ (see table below for more resistance values)		

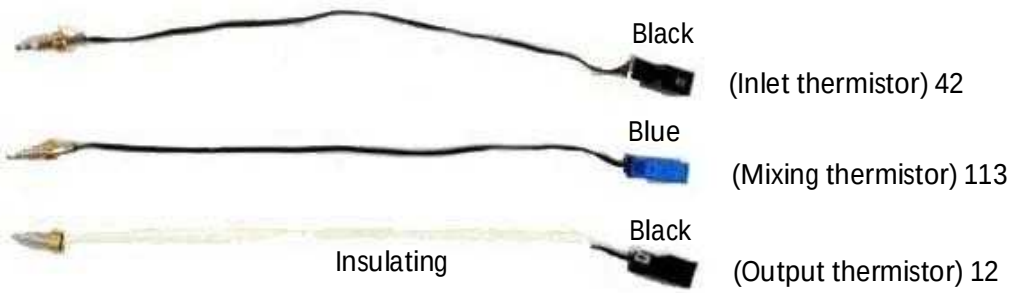

Resistance values of thermistors as a function of temperature

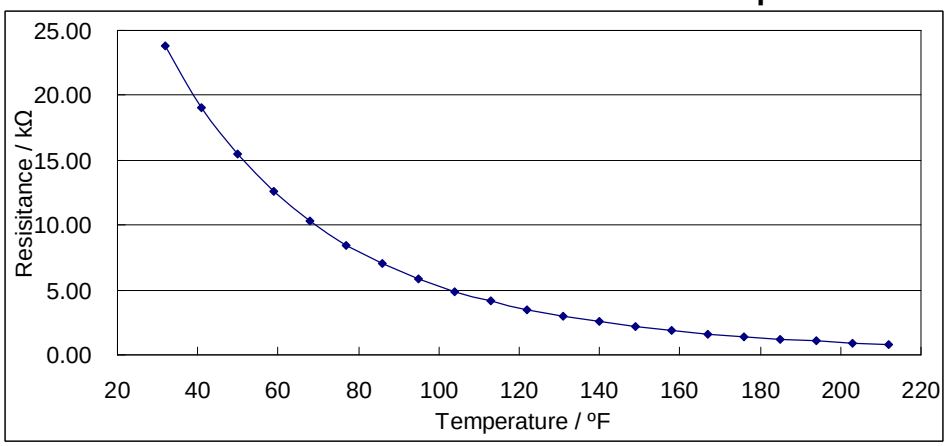

10-12. Hi-limit switch

Unit Part #	#412	**AOS Part #**	319143-095	**Checkpoint**	**C1**
Function	-Based on bi-metal thermal expansion. -Detects excessively high water temperature (more than 194˚F or 90˚C) in pipes of the heat exchanger. -After detection, communication between the computer board and gas valves are severed, shutting down the water heater instantly. The "111" or "121" error codes will display.				
Failure events	1. Unable to detect excessively high water temperatures if switch fails "closed". 2. Continuous detection of excessively high water temperatures (regardless of what the actual water temperature is) if switch fails "open".				
Effects on the water heater if hi-limit switch fails	1. Unable to shut down the water heater if the water temperature from the heat exchanger exceeds 194˚F (90˚C). Note: The mixing and output thermistors always act as backup hi-limit detectors to detect excessively high water temperatures in the heat exchanger. 2. The water heater is always shut down immediately after the ignition process, and either the "111" or "121" error code will display.				
Error codes when hi-limit switch fails	**111** **121** **The 510 Indoor / 510 Outdoor don't have the "141" error code that was used in our previous models. This error code is now replaced by the "111" and the "121" error codes.**				
Diagnostic	1. Visual inspection: connection/breakage of wires. Possibility also includes scale deposits inside the heat exchanger. 2. Check voltages and resistance: proper range of values shown below.				
Color/Number of wires	Blue-Blue Less than 1.0 Ω				

When temperatures exceed 194˚F (90˚C), the reset button trips and switch goes to OFF mode.

ON mode : <194˚F (90˚C) OFF mode: to reset switch back to ON mode, press the reset button

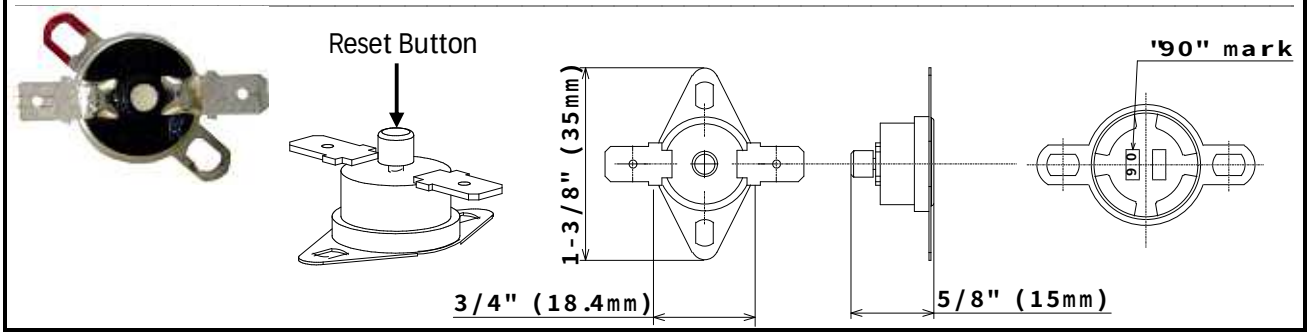

10-13. Overheat cut off fuse

Unit Part #	#413	**AOS Part #**	319143-149	**Checkpoint**	**C2**
Function	-The overheat cutoff fuse contains solder with a melting point of 430˚F (221˚C). -Detects excessive temperatures within the water heater, especially around the heat exchanger and combustion chamber. Upon detection, communication between the computer board and gas valves will sever, shutting down the water heater instantly. The "111" or "121" error code will display.				
Failure events	1. Unable to detect the excessively high temperatures within the water heater.				
Effects on the water heater if the overheat cutoff fuse fails	1. Flames from burner may penetrate a ruptured/damaged heat exchanger. 2. Gas valves will not operate.				
Error codes when the overheat cutoff fuse fails	**111**		**121**		
Diagnostic	1. Visual inspection: connection/breakage of wires. 2. Check voltages and resistance: proper range of values shown below.				
Color/Number of wires	Blue-Blue	Less than 1.0 Ω			

Solder will melt at temperature exceeding 430˚F (±9˚F) or 221˚F (±5˚C)

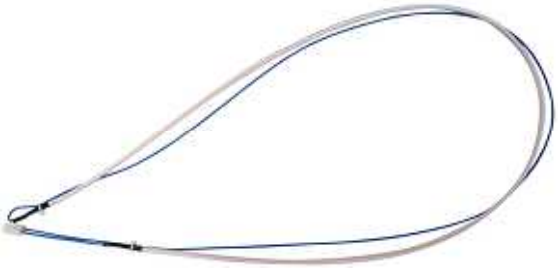

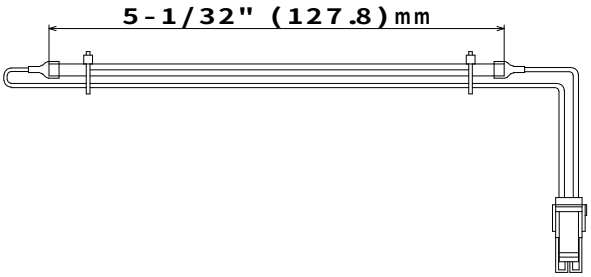

The O.H.C.F. has a red line on itself.

10-14. Freeze protection heaters

Unit Part #	#414 #415	**AOS Part #**	319143-200 319143-078	**Checkpoint**	**B1**
Function	Prevents the heat exchanger, water valves, and water pipes within the water heater from freezing. The heaters are but one of the freeze protection devices in the water heater.				
Failure events	Open circuit failure: Ceramic heaters do not receive the voltage needed to heat up.				
Effects on the water heater if heater fails	Ceramic heaters do not activate, allowing water contained in the heat exchanger to freeze up, possibly causing the heat exchanger to burst.				
Error codes when heaters fails	**N/A**				
Diagnostic	1. Visual inspection: connection/breakage of wires and the condition of the heaters. 2. Check: whether those are in the normal range as shown in the following table.				
Color/Number of wires	Black - Black 90 to 110 VAC (during freeze protection operation)				

The water heater has two types of the heaters in it. The one is for protecting of the heat exchanger and the outlet pipe, the other one is for protecting of the inlet pipe.

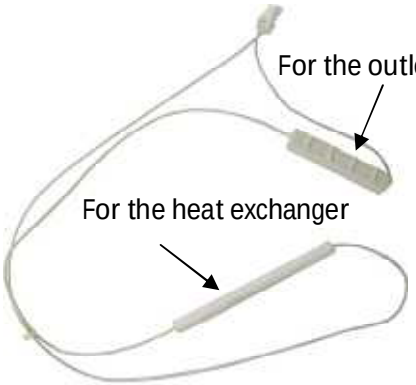

(Part# 414 / 319143-200)

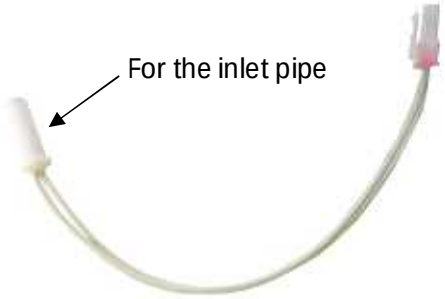

(Part# 415 / 319143-078)

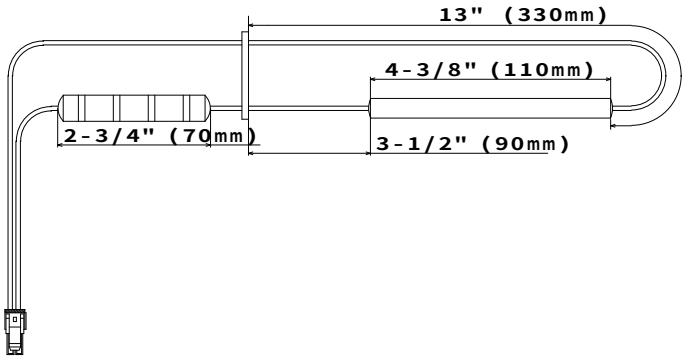

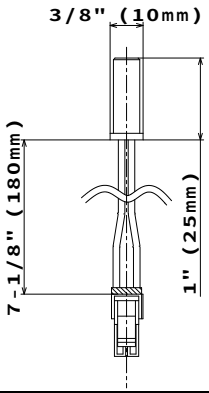

10-15. Computer board

Unit Part #	#701	**AOS Part #**	319143-179	**Checkpoint**	**N/A**
Function	Controls the functions of most of the parts in the water heater.				
Failure events	Malfunctioning computer				
Effects on the water heater if the computer board fails	-A component(s) may not operate within the water heater. In most cases of computer board failure, the whole the water heater does not operate at all. -Error codes will display.				
Error codes when the computer board fails	**701**	**721**	**741**	**761**	
Diagnostic	Visual inspection: connection/breakage of wires and/or burn marks on the computer board.				
Color/Number of wires	**N/A**				

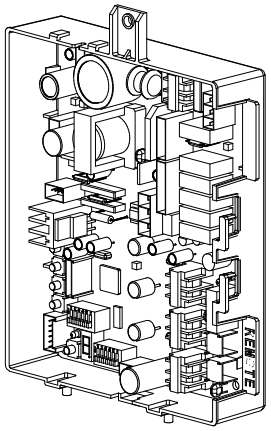

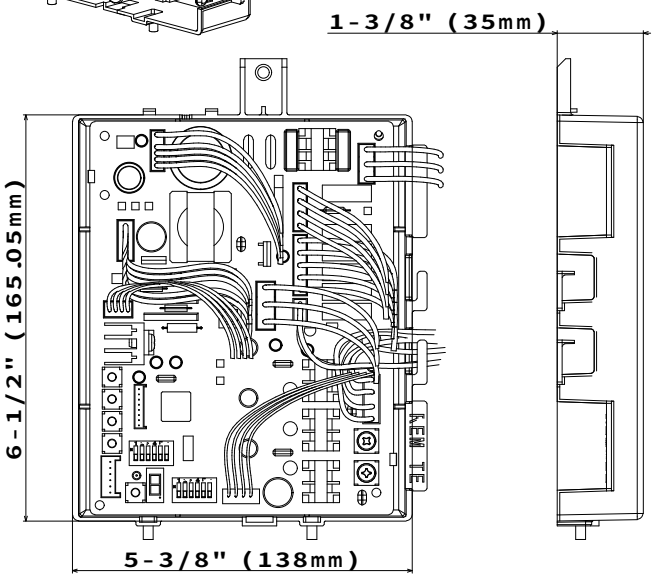

10-16. Transformer

Unit Part #	#702	**AOS Part #**	319143-182	**Checkpoint**	**A1,A2**
Function	-To transform input voltage from 120 to 100 VAC. -Every electrical component of the water heater is designed to only work with a 100 VAC power supply, therefore, the water heater comes equipped with this transformer.				
Failure events	1. There is no power coming from the transformer. 2. The voltage from the power supply cannot be converted to 100 VAC.				
Effects on the water heater if transformer fails	1. The water heater does not operate due to lack of power from transformer. 2. A failed transformer can cause electrical damage to other electrical components within the water heater.				
Error codes when transformer fails	**N/A**				
Diagnostic	1. Visual inspection: connection/breakage of wires and/or signs of electrical damage. 2. Check voltages of the transformer: Proper range of values shown below.				
Color/Number of wires	White – Black	120 VAC / less than 1 Ω			
	Brown – Brown	100 VAC / less than 1 Ω			

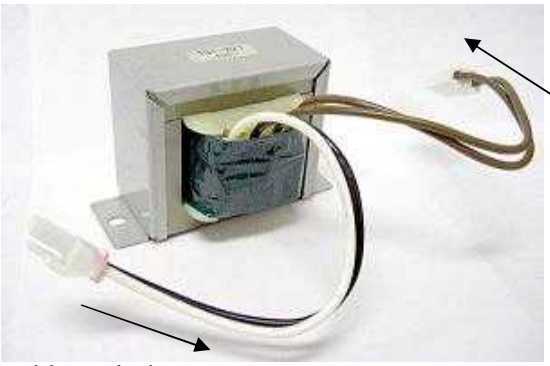

White - Black
From the 120 VAC power supply

Brown - Brown
To power computer board and heaters
(100 VAC)

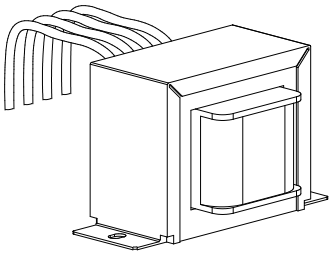

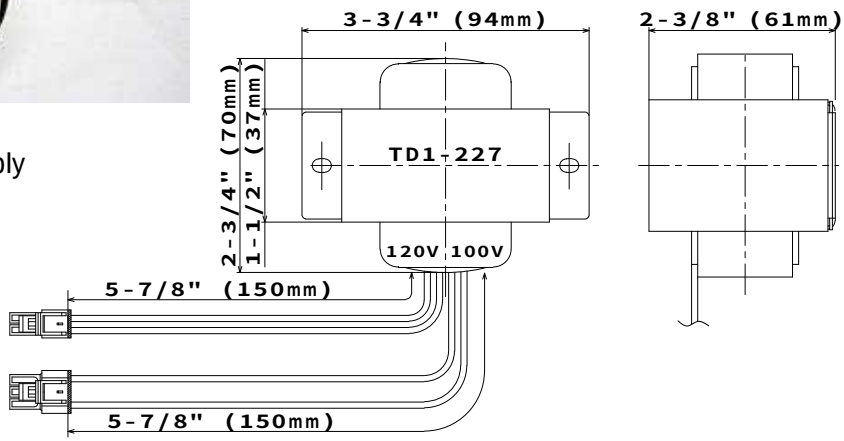

10-17. Igniter

Unit Part #	#711	**AOS Part #**	319143-052	**Checkpoint**	**B**
Function	-To ignite the gas/air mixtures when the water heater is ready to burn gas on its burner surface. -The output voltage of the igniter is more than 14 kVDC.				
Failure events	1. Unable to ignite during the ignition process. 2. Makes attempts to ignite at all times.				
Effects on the water heater if the igniter fails	1. The water heater cannot ignite during the ignition process and the "111" or "121" error codes will display. 2. No effects on the water heater, however, the durability of the igniter wears down.				
Error codes when Igniter fails	**111**			**121**	
Diagnostic	1. Visual inspection: connection/breakage of wires and/or an observed weak spark. 2. Check voltages: proper range of values shown below.				
Color/Number of wires	Purple(7)-Purple(7) 90 to 110 VAC				

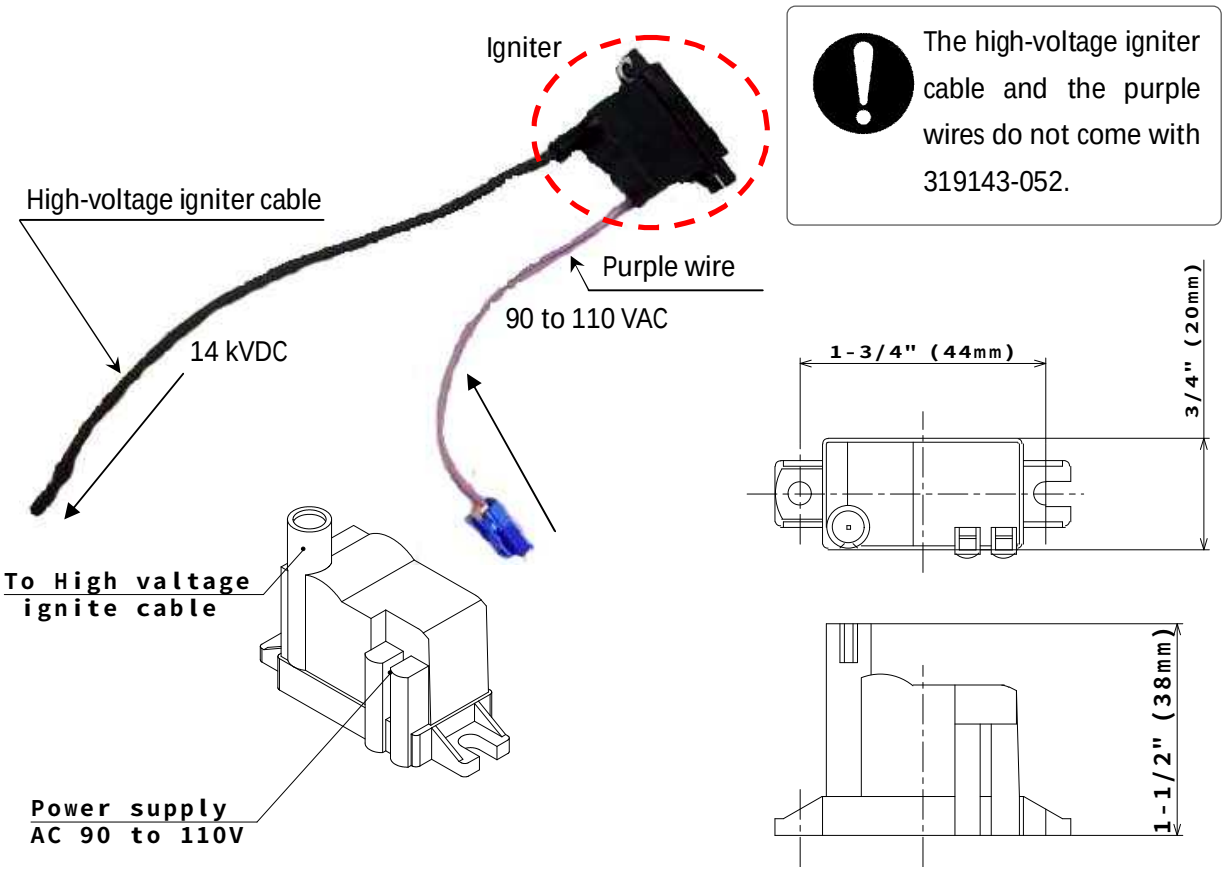

The high-voltage igniter cable and the purple wires do not come with 319143-052.

10-18. Freeze protection thermostat

Unit Part #	#713 #710	**AOS Part #**	319143-185 (510 Indoor) 319143-210 (510 Outdoor)	**Checkpoint**	**B1**
Function	Temperature detecting device which prevents the pipes within the water heater from freezing. When this device detects temperatures below 36.5˚F (2.5˚C) inside the water r heater, power is supplied to the electric heaters to prevent the water heater from freezing.				
Failure events	1. ON-failure (Always senses freezing temperatures, regardless of actual temperature). 2. OFF-failure (Never senses freezing temperatures).				
Effects on the water heater if the freeze protection thermostat fails	1. The freeze protection heaters will always be ON, causing heat damage to components inside the water heater. 2. The freeze protection heaters will never be able to turn on, even under freezing temperatures, causing freeze damage to the water heater.				
Error codes when the freeze protection thermostat fails	**N/A**				
Diagnostic	1. Visual inspection: connection/breakage of wires and/or the body has been broken. 2. Check resistance and voltage: proper range of values shown below.				
Color/Number of wires	Black - Black (itself)	ON mode: 90 VAC - 110 VAC and less than 1 Ω OFF mode: less than 1 VAC and more than 1 MΩ			

Activation and deactivation temperature of the water heater's freeze protection system

ON mode: 36.5˚F (+6.3˚F -2.7˚F)	2.5˚C (+3.5˚C -1.0˚C)
OFF mode: above 46.4˚F	above 8 ˚C

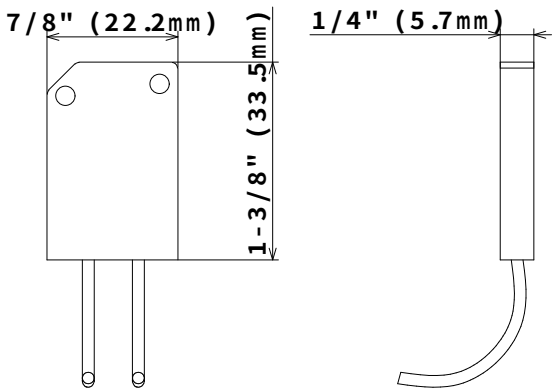

10-19. Surge box

Unit Part #	#703	**AOS Part #**	319143-168	**Checkpoint**	**A2,A3**
Function	Protects the unit from high voltage and/or high electric current caused by lightning. There are 2 types of surge absorbers in the water heater. Surge absorber A is activated by voltage higher than 220V, the other one is activated by voltage higher than 680V.				
Failure events	1. Open-failure of the absorber and/or fuse. 2. Short-failure of the absorber.				
Effects on the water heater if the fuse box fails	1. Unable to protect the computer board if high voltage gets applied to the unit. The computer board can short out, stopping all operations. 2. The unit cannot operate because the absorber shorted out, causing the fuse to break open.				
Error codes when the surge box fails	**N/A**				
Diagnostic	1.Visual inspection: burn marks on components and/or connection/breakage of wires. 2. Check resistance and voltage: proper range of values shown below.				
Color/Number of wires	White-Black 108 to 132 VAC				

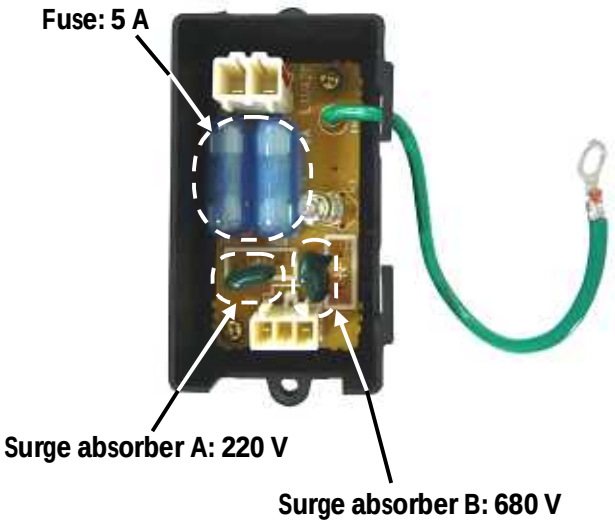

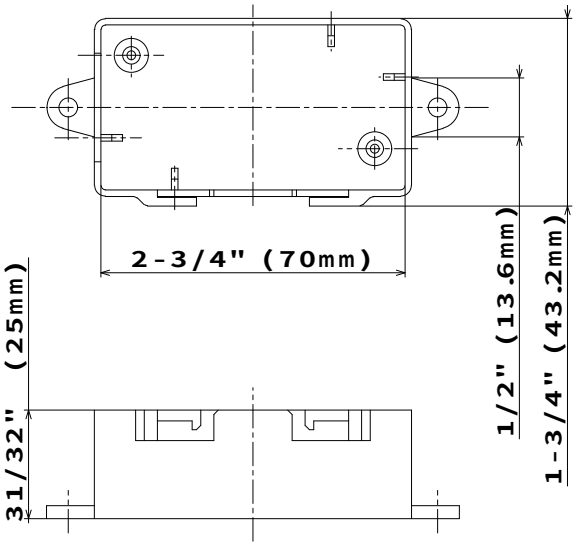

11. Fault Analysis & Specifications

Remarks:
1. Proper range of values of voltage & resistance shown below.
2. Please refer to the wiring diagram for checkpoint positions.
3. Remove power to the water heater when checking for continuity, disconnections, resistance values, etc.

Natural of Fault	Diagnosis	Checkpoint
• No display on temperature remote controller, even when remote is turned on.	1 Check the power supply [1] Check the power supply from Power ON-OFF switch to the PCB **(Refer to section12-2)** [2] Check the power supply line to the water heater	
	2 Fault of Power ON-OFF switch Normal: 100 VAC between (white-black) Normal: 100 VAC between (brown-brown)	 A A1
	3 Fault of transformer [1] Disconnection / breakage of wires Normal: 120 VAC between (white-black) Normal: 100 VAC between (brown-brown)	 A2 A1
	4 Blown fuse at surge box (3A)	A2
	5 Fault of PCB [1] No voltage at remote control terminal Normal: 11 to 25 VDC between (white-black)	F
	6 Disconnection/short-circuit/grounding of remote wires Normal: 11 to 25 VDC between (white-black)	
	7 Fault of PCB of remote control [1] Check for normal voltage at terminal	
•It takes long time to get hot water at the fixtures	1 The time it takes to deliver hot water from the water heater to fixtures depends on the length of piping between them. The longer the distance or the bigger the pipes, the longer it will take to get hot water. 2 If you need hot water to fixtures quicker, you may want to consider a hot water recirculation system.	
• The water is not hot enough	1 Check cross pluming between cold water lines and hot water lines. 2 Check whether the gas supply pressure is enough. 3 Check whether the temperature setting is too low.	
• The water is too hot	1 Check whether the temperature setting is too high.	
• The hot water is not available when a fixture is opened	1 Make sure the unit has a 120 VAC / 60 Hz power supply. 2 If the remote controller is used, check whether the power button is turned on. 3 Check that the filter on the cold water inlet is clean. 4 Check whether the hot water fixture is sufficiently open to draw at least 0.5 GM through the water heater.	

Natural of Fault	Diagnosis	Checkpoint
• The hot water is not available when a fixture is opened	5 Check that the filter on the cold water inlet is clean. 6 Check whether or not the unit is frozen. 7 Check if there is enough gas in the tank. (for propane units)	
•The hot water turns cold and stays cold	1 Check whether the flow rate is high enough to keep the water heater running. 2 Check if there is a recirculation system installed and check also if the recirculation line has enough check valves. 3 Check that the filter on the cold water inlet is clean. 4 Check that the fixtures are free from debris and obstructions.	
• The fan motor is still spinning after operation has stopped	1 This is normal operation. After operation has stopped, the fan motor keeps its running 15 to 70 seconds in order to re-ignite quickly, as well as purge all the exhaust gas out of the flue.	
• Abnormal sound from water heater	1 Check the gas type of the water heater. 2 Check how long the water heater has been installed and in use. 3 Check the installation place. 4 Check the altitude/elevation of area of where the water heater installed. 5 Check the vent length, when the water heater has been installed indoors. 6 Check if there is any blockage in the intake air and/or exhaust. 7 Check if there is dust and lint in burner and heat exchanger, when the water heater has been installed in laundry room. 8 Check if there is grease and dirt in burner and fan motor, when the water heater has been installed in restaurant. 9 Check the manifold pressure in the water heater.	

Natural of Fault	Malfunction description	Cancellation method
• Fluctuation of hot water temperature	-Fault of gas solenoid valves (SV_1 & SV_3) during change of the combustion stage -Fault of flow adjustment valve	
	Diagnosis	**Checkpoint**
	1 Check whether the filter in cold water inlet is cleaned. 2 Check whether the gas supply pressure is adequate. 3 Check for cross connections between cold water lines and hot water lines.	

Natural of Fault	Diagnosis	Checkpoint
• Fluctuation of hot water temperature	4 Fault of PCB in the water heater [1] No voltage to gas solenoid valve (SV_1). Normal: 78 to 100 VDC between COM (blue) & #9 (green) (during operation) [2] No voltage to gas solenoid valve (SV_3). Normal: 78 to 100 VDC between COM (blue) & #73 (red) (during operation)	C
	5 Gas solenoid valve (SV_1) fault [1] Disconnected wiring to gas solenoid valve (SV_1) Normal: 1.3 to 1.9 kΩ between COM (blue) & #9 (green) [2] Disconnected wiring to gas solenoid valve (SV_3) Normal: 0.9 to 1.7 kΩ between COM (blue) & #73 (red)	C
	6 Fault of PCB in the water heater No voltage flow adjustment valve Normal: 7 to 16V DC between (red-black)	J
	7 Flow adjustment valve fault Normal: 0.09 to 0.2 kΩ between (red-black)	J

Error Code	Malfunction description	Cancellation method
031	Incorrect dipswitch setting fault	Turn off the power or water supply
	Diagnosis	**Checkpoint**
	Check the dipswitch settings on PCB	

Error Code	Malfunction description	Cancellation method
101	Warning for the "991" error code **(Refer to section 12-3)**	On the PCB, press the INC and DEC buttons simultaneously for 3 sec. Then turn the power off.
	Diagnosis	**Checkpoint**
	1 Check the gas type of the water heater. 2 Check how long the water heater has been installed and in use. 3 Check the installation location. 4 Check the altitude/elevation of area of where the water heater installed. 5 Check the vent length. 6 Check if there is any blockage in the intake air and/or exhaust. 7 Check if there is dust and lint in burner and heat exchanger, when the water heater has been installed in laundry room.	

Error Code	Diagnosis	Checkpoint
101	8 Check if there is grease and dirt in burner and fan motor, when the water heater has been installed in restaurant. 9 Check the manifold pressure in the water heater.	

Error Code	Malfunction description	Cancellation method
111	Ignition failure	Turn off the power or water supply

Diagnosis	Checkpoint
1 Check gas supply and inlet gas pressure **(Refer to section 1)**	
2 Check the igniter **(Refer to section 10-17)** Visual inspection: connection/breakage of wires and/or observed weak spark. [1] Cracks/soot on igniter rod [2] Improper gap between burner & igniter rod Normal gap: 0.16" (4mm) [3] PCB fault Normal: 90 to 110 VAC at #7 (purple-purple) (during ignition) 3 PCB fault [1] No voltage to main gas solenoid valve (MV) Normal: 78 to 100V DC between COM (blue) & #3 (light blue) (during operation) [2] No voltage to gas solenoid valve (SV_2) Normal: 78 to 100V DC between COM (blue) & #53 (orange) (during operation) [3] No voltage to gas proportional valve (VG_0) Normal: 1 to 15VDC between white & red (during operation)	B C H1
4 Gas solenoid valve fault [1] Main gas solenoid valve (MV) fault Normal: 0.9 to 1.3 kΩ between COM (blue) & #3 (light blue) [2] Gas solenoid valve (SV_2) fault Normal: 1.3 to 1.9 kΩ between COM (blue) & #53 (orange) [3] Gas proportional valve (VG_0) fault Normal: 1 to 15 VDC between white & red (during operation)	C H1

Error code is shown after three failed attempts at ignition

Error Code	Diagnosis	Checkpoint
111 Error code is shown after three failed attempts at ignition	5 Disconnected/damaged O.H.C.F. **(Refer to section 10-13)** Visual inspection: connection/breakage of wires. Normal: 1 Ω or less between blue & blue	C2
	6 Disconnected/damaged hi-limit switch. **(Refer to section 10-12)** Visual inspection: connection/breakage of wires. Normal: 1 Ω or less between blue & blue	C1
	7 Inspect flame rod [1] Check for any soot on the rod. [2] Check the connection of ground wire; make sure there is firm contact to the ground of the water heater. (in this case, the wire is contacted to the manifold surface.) [3] PCB fault During operation: more than 1 μA through the flame rod wire (orange) [4] Flame rod fault During operation: more than 1 μA through the flame rod wire (orange)	I
	8 Check if hi-limit switch is properly functioning.	

Error Code	Malfunction description	Cancellation method
121 Error code is shown after three failed attempts at ignition	Loss of flame	Turn off the power or water supply
	Diagnosis	**Checkpoint**
	1 Check gas supply and pressure **(Refer to section 1)**	
	2 PCB fault [1] No voltage to gas main solenoid valve (MV) Normal: 78 to 100 VDC between COM (blue) & #3 (light blue) (during operation) [2] No voltage to gas solenoid valve (SV_2) Normal: 78 to 100 VDC between COM (blue) & #53 (orange) (during operation) [3] No voltage to gas proportional valve (VG_0) Normal: 1 to 15 VDC between white & red (during operation)	C H1
	3 Gas solenoid fault [1] Main gas solenoid valve (MV) fault Normal: 0.9 to 1.3 kΩ between COM (blue) & #3 (light blue) [2] Gas solenoid valve (SV_2) fault Normal: 1.3 to 1.9 kΩ between COM (blue) & #53 (orange) [3] Gas proportional valve (VG_0) fault Normal: 1 to 15 VDC between white & red	C H1

Error Code	Diagnosis	Checkpoint
121 Error code is shown after three failed attempts at ignition	4 Check for soot on the flame rod [1] Clean the flame rod [2] PCB fault During operation: more than 1 μA through the flame rod wire (orange)	I
	5 Disconnected/damaged O.H.C.F. **(Refer to section 10-13)** Visual inspection: connection/breakage of wires. Normal: 1 Ω or less between blue & blue	C2
	6 Check if hi-limit switch is properly functioning.	
	7 Disconnected/damaged hi-limit switch. **(Refer to section 10-12)** Visual inspection: connection/breakage of wires. Normal: 1 Ω or less between blue & blue	C1

Error Code	Malfunction description	Cancellation method
311	Disconnected/short-circuited output thermistor	Turn off the power or water supply
	Diagnosis	**Checkpoint**
	1 Output thermistor fault **(Refer to section 10-11)** Visual inspection: connection/breakage of wires and/or debris on thermistor. Check voltage/resistance between black & black (#12). Refer to Section 8 for proper range of values.	E2

Error Code	Malfunction description	Cancellation method
321	Disconnected/short-circuited inlet thermistor	Turn off the power or water supply
	Diagnosis	**Checkpoint**
	1 Inlet thermistor fault **(Refer to section 10-11)** Visual inspection: connection/breakage of wires and/or debris on thermistor. Check voltage/resistance between black & black (#42). Refer to Section 8 for proper range of values.	E3

Error Code	Malfunction description	Cancellation method
331	Disconnected/short-circuited mixing thermistor	Turn off the power or water supply
	Diagnosis	**Checkpoint**
	1 Mixing thermistor fault **(Refer to section 10-11)** Visual inspection: connection/breakage of wires and/or debris on thermistor. Check voltage/resistance between black & black (#113). Refer to Section 8 for proper range of values.	E1

Error Code	Malfunction description	Cancellation method
391	Disconnected AFR rod	Turn off the power or water supply
	Diagnosis	**Checkpoint**
	1 AFR rod fault **(Refer to section 10-6)** Visual inspection: connection/breakage of wires, soot on it.	I

Error Code	Malfunction description	Cancellation method
441	Flow sensor failure (Only Easy-link system)	Turn off the power or water supply
	Diagnosis	**Checkpoint**
	1 Flow sensor failure **(Refer to section 10-9)** Visual inspection: connection/breakage of wires and/or debris on impeller. Check voltage/resistance between (red & black) or (white & black)	H2

Error Code	Malfunction description	Cancellation method
510	Fault of driving circuit for main gas solenoid valve (MV, SV_1, SV_2 and/or SV_3) (The computer checks the condition of the main gas valve immediately after every operation and the conditions of the solenoid valves 6 hours after every operation)	Turn off the power supply
	Diagnosis	**Checkpoint**
	1 PCB and/or main gas valve fault **(Refer to section 10-4 & 10-15)** Visual inspection of gas valves: connection/breakage of wires. Normal: 78 to 100 VDC between COM (blue) & #3 (light blue) (during operation) Normal: 78 to 100 VDC between COM (blue) & #9 (green) (during operation) Normal: 78 to 100 VDC between COM (blue) & #53 (orange) (during operation) Normal: 78 to 100 VDC between COM (blue) & #73 (red) (during operation) Visual inspection of PCB: connection/breakage of wires and/or burn marks on the computer board. 2 Gas solenoid valve fault (MV, SV_1, SV_2 and/or SV_3)	C

Error Code	Malfunction description	Cancellation method
611	Fan motor fault	Turn off the power or water supply
	Diagnosis	**Checkpoint**
	1 PCB and fan motor fault **(Refer to section 10-3 & 10-15)** Visual inspection of fan motor: connection/breakage of wires or dust buildup (causing electrical shortage) Normal: 110 to 160 VDC between red & blue (during operation) Normal: 13 to 17 VDC between yellow & blue (during operation) Normal: 2.0 to 6.5 VDC between orange & blue (during operation) Verify fan motor speed of the water heater using the "diagnostics mode" of the 9007603005 temperature remote controller. See the "12-1. How to diagnose the water heater using the 9007603005". Visual inspection of PCB: connection/breakage of wires and/or burn marks on the computer board.	G

Error Code	Malfunction description	Cancellation method
651	Flow adjustment valve fault (Only Easy-link system)	Turn off the power or water supply
	Diagnosis	**Checkpoint**
	1 PCB and flow adjustment valve fault **(Refer to section 10-8 & 10-15)** Visual inspection of flow adjustment valve: connection/breakage of wires, motor drive locked due to scale buildup, and/or water leakage. Normal: 7 to 16 VDC between (black-red) Visual inspection PCB: connection/breakage of wires and/or burn marks on the computer board.	J

Error Code	Malfunction description	Cancellation method
701	1 PCB fault [1] Fault of preparation for the mixing thermistor operation. [2] Fault of driving circuit for Gas Proportional Valve(VG_0)	Turn off the power or water supply
	Diagnosis	**Checkpoint**
	1 Check the PCB and/or gas proportional valve **(Refer to section 10-4 & 10-15)** Visual inspection PCB: connection/breakage of wires and/or burn marks on the computer board. Visual inspection gas proportional valve: connection/breakage of wires of the gas proportional valve. Normal: 20 to 40 Ω between (white) & (red)	H1

Error Code	Malfunction description	Cancellation method
721	False flame detection	Turn off the power or water supply
	Diagnosis	**Checkpoint**
	1 False flame detection (5 sec.) Flame rod (Insulated resistance) fault	I

Error Code	Malfunction description	Cancellation method
741	Miscommunication between water heater and temperature remote controller	Restoring proper cable connections between the water heater and t the Remote controller (9007603005). When the computer detects proper connections between the water heater and the remote controller, "741" error code will cease to display.
	Diagnosis	**Checkpoint**
	1 Temperature remote controller (9007603005) or PCB fault 2 Check for signs of power surges.	

Error Code	Malfunction description	Cancellation method
761	Miscommunication between Parent and Child units for Easy Link systems.	Restoring proper cable connections among all the water heaters. When the computer detects proper connections among all the water heaters, "761" error code will cease to display.
	Diagnosis	**Checkpoint**
	1 Inspect cable connections between Parent and Child units. 2 Check for signs of power surges.	

Error Code	Malfunction description	Cancellation method
991	Imperfect combustion **(Refer to section 12-3)**	Turn off the power or water supply If not possible, press and hold the INC and DEC buttons on the computer board simultaneously for more than 3 sec.
	Diagnosis	**Checkpoint**
	1 Check the gas type of the water heater. 2 Check how long the water heater has been installed and in use. 3 Check the installation place. 4 Check the altitude/elevation of area of where the water heater installed. 5 Check the vent length. 6 Check if there is any blockage in the intake air and/or exhaust. 7 Check if there is dust and lint in burner and heat exchanger, when the water heater has been installed in laundry room. 8 Check if there is grease and dirt in burner and fan motor, when the water heater has been installed in restaurant. 9 Check the manifold pressure in the water heater.	

12. Controls and settings

12-1. Diagnosis using the 9007603005 47
12-2. The error-code button: Verifying functionality of computer board, Displaying error code history, and Clearing error code history memory 50
12-3. Clearing the “101” and “991” error code 51
12-4. AFR rod function 52
12-5. Dipswitch settings 53
12-6. Assigning unit numbers in the Easy-link system 55
12-7. (A) ON/OFF conditions: Overview 56
12-7. (B) ON/OFF conditions: BTU requirements 57
12-8. (A) Pump control ON/OFF conditions: (Only for single and Easy-link system) 58
12-8. (B) Pump control ON/OFF conditions: BTU requirements 59
12-9. Multi-unit system ON/OFF conditions 60
12-10. High-Altitude Region Support Functions (FM+, FM++, and FM+++) 61
12-11. Relay selection for the pump control connection 62
12-12. Adjusting manifold gas pressure 63
12-13. Manually adjusting the fan motor speed 65
12-14. Freeze protection system 66
12-15. Draining the unit and cleaning the inlet water filter 69

12-1. Diagnosis using the 9007603005

< Individual unit>

1. Press the "**HOT**" button and the "**COLD**" button simultaneously for at least 5 seconds to enter "Diagnostic mode".
2. Scroll up or down to the needed information (mode #) of the 510 Indoor or 510 Outdoor by pressing the "**HOT**" or "**COLD**" buttons (Fig.1 shows mode #5 being selected.)

   When selecting information, please refer to the table on p. 49 for the proper mode #.
3. Press the "**INFO**" button to select the mode #, and the information to which the mode # correlates to will display on the 9007603005 (Fig.2).
4. When the "**ON/OFF**" button is pressed or 5 minutes have elapsed without pressing any buttons, the display will return to normal.

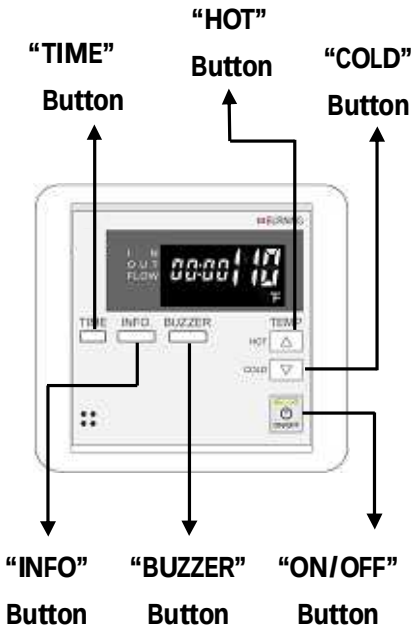

Mode #

Fig.1

Information

Fig.2

< For multiple units in an Easy-Link system >

1. Press and hold the "**HOT**" and "**COLD**" buttons simultaneously for at least 5 seconds to enter "Diagnostics Mode".
2. "0" will be displayed on the 9007603005. (See Fig. 1)
3. Scroll to the desired 510 Indoor or 510 Outdoor unit # in the easy-link system by pressing the "**HOT**" or the "**COLD**" buttons to scroll up or down. (Fig. 2 shows that unit #2 is being selecting)

NOTE: The definition of the unit #'s:

"0" will yield information about the Easy-link system as a whole, and numbers "1", "2", "3", & "4" will yield information about each of the individual 510 Indoor or 510 Outdoor installed in the Easy-link system.

In an Easy-link system of 510 Indoor or 510 Outdoor, a maximum of four units of the 510 Indoor or 510 Outdoor's can be linked together.

4. Press the "**INFO**" button to select the desired unit #.
5. When the desired unit # is selected and fixed, scroll up or down to the needed information (mode #) of the unit by pressing the "**HOT**" or "**COLD**" buttons.
   (Fig.3 shows mode #6 is being selected.) **When selecting information, please refer to the table on p.48 for the proper mode #.**
6. Press the "**INFO**" button to select the mode #, and information to which the mode # correlates to will display on the 9007603005. (Fig. 4)
7. When the "**ON/OFF**" button is pressed or 5 minutes have elapsed without pressing any buttons, the display will return to normal.

Whole diagnostic mode | Unit # | Mode# | Information

Fig.1 Fig.2 Fig.3 Fig.4

For example, the figures above show how to arrive at the ON/OFF cycles information for Unit #2 in a Easy-Link System.

Description of mode numbers in “Diagnostics Mode”

Mode #	Whole multi-unit system information (#0)		Unit information (#1 to #4)	
1	Total system flow rate	0 to 999 (×0.1 GPM)	Total operation time	0 to 9999 (hours)
2	N/A		ON/OFF cycles	0 to 9999 (×100 cycles)
3	Quantity of connected 510 Indoor or 510 Outdoor’s	1 to 4 (units)	Fan motor speed	0 to 9999 (rpm)
4	Priority 510 Indoor or 510 Outdoor unit	1 to 4 (unit #)	Inlet temperature	32 to 210 (°F). Over 210°F=E5, Under 32°F=E0
5	Quantity of operational 510 Indoor or 510 Outdoor’s	1 to 4 (units)	Output temperature	
6	Set temperature	99 to 185 °F	Mixing temperature	
7	Operation time during current rotation	0 to 720 (minutes). After 720, the next rotation occurs	Air-Fuel ratio rod current	0 to 999 (×0.1μA)
8	ON/OFF cycles during current rotation	0 to 100 (cycles). After 100, the next rotation occurs	Flow rate	0 to 999 (×0.1 GPM)
9	N / A		Energization time of unit	0 to 9999 (×10 hour)
10**			Integrating flow of Unit	0 to 9999 (×1,000 gallon)
11**			Error code history: displays most recent error code	
12**			Error code history: displays 2nd most recent error code	
13**			Error code history: displays 3rd most recent error code	
14**			Clears memory in error code history*	
15**			N / A	
16**			Air-Fuel ratio stage	0 to 16, normal condition=6

* **9007603005:** Simultaneously press the “**INFORMATION**” button and the “**BUZZER**” buttons on the 9007603005 while in mode# 14 for at least 5 seconds to completely clear the memory in the error code history.

** Mode #’s after #9 will be displayed as a number (e.g. “10”, “11”,……, “16”) on the 9007603005. After #16, the 9007603005 will cycle back to #1 again.

12-2. Verifying functionality of computer board and Displaying error code history, and Clearing error code history memory

The 510 Indoor and 510 Outdoor has an "**Error-call button**" on the computer board that provides the functions listed below. The button is located next to the 7-seg LED (as shown in the picture to the right).

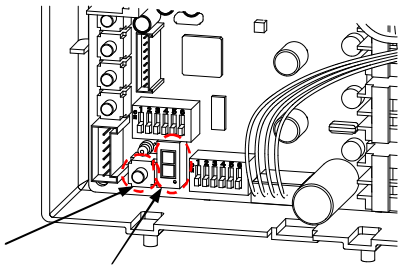

Check if the computer board works properly

1. Turn on the ON/OFF button of TM-RE30 remote control.
2. If the computer board works properly, the 7-seg LED will light in a circular "0" pattern, one segment at a time.

Displaying error code history

1. Briefly press the "**Error-call button**" (do not hold down the button).
2. If the 510 Indoor or 510 Outdoor has had prior error codes, the 7-seg LED will display the most recent error code first. Pressing the button again will display the 2nd most recent error code and so on (Computer saves a maximum of 10 error codes). If the 510 Indoor or 510 Outdoor has never had any error codes, the 7-seg LED will display a bar "—".

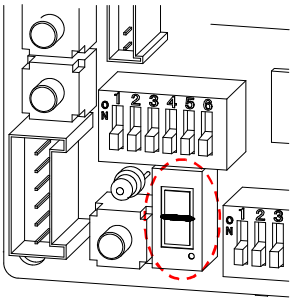

Clearing error code history memory

1. Press and hold the "**Error-call button**" for at least 5 seconds.
3. The 7-seg LED will display "C", "L" and "r" in succession to signify that the computer board memory has been erased of all error codes.

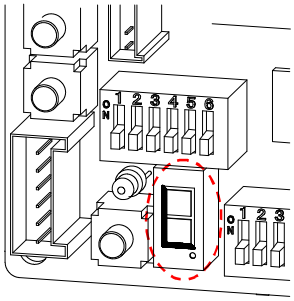

12-3. Clearing the "101" and "991" error code

The "101" and "991" error codes signify imperfect (abnormal) combustion, caused by insufficient intake air and/or obstructions in the exhaust.

A. If the "101" and "991" error code occurs, please check the following:

1. What is the gas-type of the water heater Outdoor: liquid propane or natural gas?
2. How long has the water heater been installed and been in use?
3. Where is the water heater installed: indoor, outdoor, attic, etc?
4. What is the altitude/elevation of the area of installation?
5. Are there any obstructions in the intake air and/or exhaust?
   - Damper sticking.
   - Vent Flaps installed on the Terminator.
   - Snow build up around Terminator.
   - Installed in a closet. (No Ventilation or lack of combustion air)
6. If installed in laundry room, check the burner and heat exchanger. Dust and lint may deposit in burner and heat exchanger.
7. If installed in restaurant, check the burner and fan motor. Grease and dirt may deposit in burner and fan motor.
8. Check if the manifold pressure of the water heater is too high.

B. How to clear the "101" and "991" error code (after resolving the main root cause of the error):

On the computer board, press and hold the "**Increase**" and "**Decrease**" buttons simultaneously for at least 3 seconds until the red light turns on. Turn off the 120 VAC by Power ON-OFF switch and turn back on. The "101" and "991" error code should then be cleared.

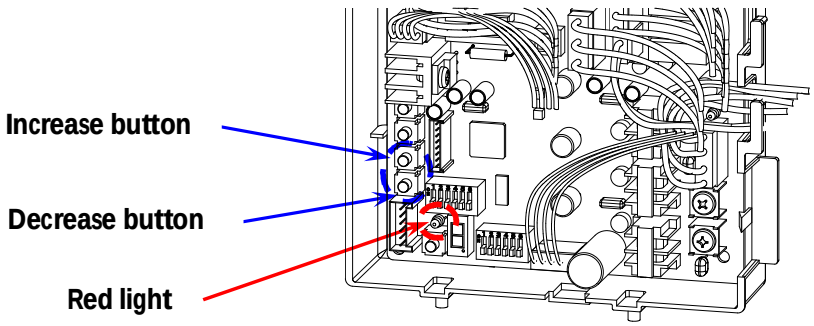

12-4. AFR rod function

<Function>

The AFR rod checks flame conditions during combustion. When the AFR rod detects unexpected flame conditions, the computer board of the 510 adjusts the fan motor speed to ensure that air and fuel are always at a proper mixture ratio, minimizing emissions.

<AFR normal range of values> (Unit: μA)

Model		510 Indoor		510 Outdoor	
Gas type		LPG	Natural gas	LPG	Natural gas
Combustion mode	MAX	8.8 to 32.5	12.5 to 35.0	2.5 to 50.0	9.0 to 38.0
	MIN	1.5 to 13.2	2.0 to 11.5	3.5 to 18.5	2.0 to 10.5

- If the detected AFR value is higher than the normal value, the FM speed is increased.
- If the AFR value is lower than the normal value, the FM speed is decreased.
- **These values are read with the front cover close.**
- Measure the values after the water heater for ten minutes.

*The AFR stage can be confirmed in "Diagnostic Mode". (Section 12-1)

<The relationship between the AFR stage and the "10" and "99" error codes>

FM	Stage	
+15%	16	"991" error code
+13.5%	15	"101" error code
⋮	⋮	
0%	6	Default condition
⋮	⋮	
-9%	0	

(Condition of AFR stage)

- 0 to 5: Air-rich
- In order to solve the "air excess" problem, the fan motor speed is automatically decreased and AFR combustion stage goes down.
- 6: Default
- 7 to 16: Gas-rich or Air shortage
- In order to solve the "air deficiency" problem, the fan motor speed is automatically increased and AFR combustion stage goes up.
- 15: "101" error code
- 16: "991" error code
- When the "101" or "991" error code appears, see section 12-3.

12-5. Dipswitch settings

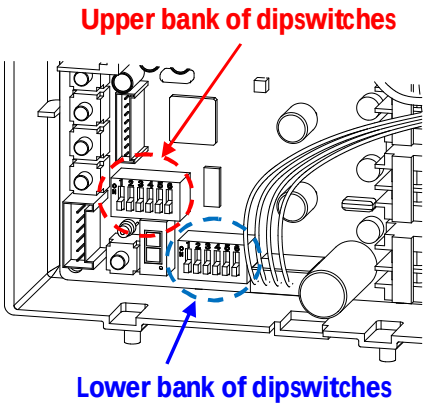

The 510 Indoor shares the computer board with the 510 Outdoor. There are two banks of dipswitches (upper and lower bank) on the computer board. The upper bank has certain special functions as shown on the following table and generally should not need adjustment. Carefully verify the functions of each dipswitch before changing any settings.

The functions of the upper bank of dipswitches

No.	Functions	ON position	OFF position
1	Gas type	Propane	Disable
2		Natural gas	Disable
3	Allow adjustments of fan motor speed **(Changing the FM speed is similar to changing the manifold pressure. See section 12-13)**	Enable	Disable (Default)
4 5	FM+, FM++ and FM+++ **(FM speed is increased automatically. See section 12-10)**		
6	N/A	N/A	N/A (Default)

510 Indoor

		No. 4	
		OFF position	ON position
No. 5	OFF position	0 %	+6 %
	ON position	+12 %	+18 %

510 Outdoor

		No. 5	
		OFF position	ON position
No. 6	OFF position	0 %	+4 %
	ON position	+8 %	+12 %

The function of the lower bank of dipswitches

No.	Functions	ON position	OFF position
1	Parent/Child setting for Easy-Link systems	Parent	Child (Default)
2	Model type	(Default) 510 Indoor	Disable
3		(Default) 510 Outdoor	Disable
4 5 6	Output temperature settings (See table to the right) (Default 122°F)	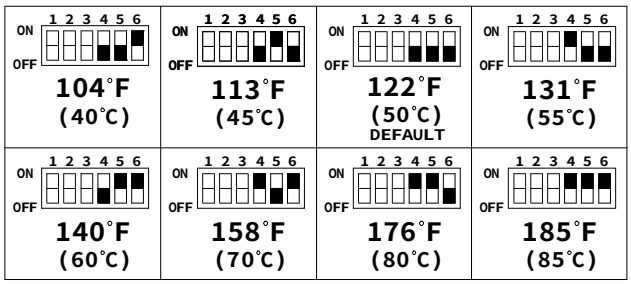	

12-6. Assigning unit numbers in the Easy-link system

A. How to display the unit number

Press the "**Increase**" button on the computer board. The 7-seg LED will then display the assigned number for that 510 Indoor or 510 Outdoor unit for 10 sec.

NOTE: In a single-unit installation, the numbering system is disabled.

B. How to reset and reconfigure the numbering of units

Unit #'s can be reset and reassigned manually:

1. Press and hold the "**Increase**" button on the computer board of all child units for at least 5 seconds.
2. The 7-seg LED on the computer board of all child units will display "0" to signify that the computer memory has been erased of its previously assigned unit #.
3. **Press and hold the "Increase" button on each unit in the new order of your choosing. The new unit numbers will be assigned in this order.**

- Each 510 Indoor or 510 Outdoor in an Easy-link system is assigned a random unit #, except for the Parent unit, which is always assigned as unit #1.
- When more than four units of the 510 Indoor or 510 Outdoor are connected in an Easy-link system, only the first four units will work as a system. The remaining units will not operate.

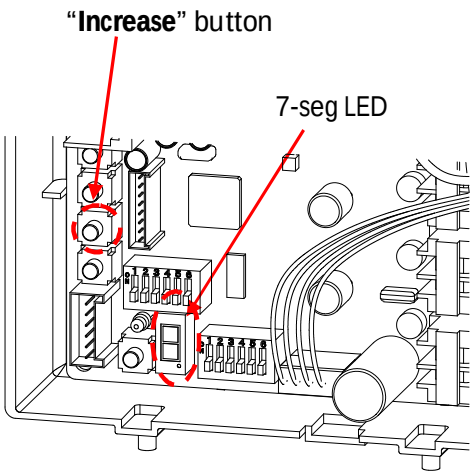

Computer board

12-7. (A) ON/OFF conditions: Overview

The following table shows the ON/OFF conditions of the 510 Indoor or 510 Outdoor.

ON/OFF Conditions	
Conditions needed to turn ON.	The BTU requirement is more than 14,880 BTU/h AND The water flow rate is more than 0.75 GPM
Conditions needed to turn OFF.	The BTU requirement is less than 11,900 BTU/h OR Inlet temperature is higher than the set temperature OR Output temperature is over 194°F OR The water flow rate is less than 0.4 GPM

12-7.(B) ON/OFF conditions: BTU requirements

A. Calculating the ON/OFF conditions of the 510 Indoor or 510 Outdoor

【Condition needed to turn the T-H2-DV or T-H2-OS ON】

$(T_{set} - T_{in}) \times GPM \times 500 > 14{,}880$

【Condition needed to turn the T-H2-DV or T-H2-OS OFF】

$(T_{set} - T_{in}) \times GPM \times 500 < 11{,}900$ or $T_{in} = T_{set}$

Where: T_{set} = Set temperature and T_{in} = Inlet temperature

B. Calculation example

Set temperature: T_{set} = 120˚F Flow rate = 2.5 GPM

【Condition needed to turn the T-H2-DV or T-H2-OS ON】

$(120 - T_{in}) \times 2.5 \times 500 > 14{,}880$ $T_{in} < 108.1$˚F

【Condition needed to turn the T-H2-DV or T-H2-OS OFF】

$(120 - T_{in}) \times 2.5 \times 500 < 11{,}900$ $T_{in} > 110.5$ ˚F

The output temperature at that moment will be 120˚F

C. ON/OFF table

Set temperature (˚F)		Flow rate (GPM)							
		0.5	1.0	1.5	2.0	2.5	3.0	3.5	4.0
113	ON	53.5	83.2	93.2	98.1	101.1	103.1	104.5	105.6
	OFF	65.4	89.2	97.1	101.1	103.5	105.1	106.2	107.0
122	ON	62.5	92.2	102.2	107.1	110.1	112.1	113.5	114.6
	OFF	74.4	98.2	106.1	110.1	112.5	114.1	115.2	116.0
131	ON	71.5	101.2	111.2	116.1	119.1	121.1	122.5	123.6
	OFF	83.4	107.2	115.1	119.1	121.5	123.1	124.2	125.0
140	ON	80.5	110.2	120.2	125.1	128.1	130.1	131.5	132.6
	OFF	92.4	116.2	124.1	128.1	130.5	132.1	133.2	134.0
158	ON	98.5	128.2	138.2	143.1	146.1	148.1	149.5	150.6
	OFF	110.4	134.2	142.1	146.1	148.5	150.1	151.2	152.0
167	ON	107.5	137.2	147.2	152.1	155.1	157.1	158.5	159.6
	OFF	119.4	143.2	151.1	155.1	157.5	159.1	160.2	161.0
185	ON	125.5	155.2	165.2	170.1	173.1	175.1	176.5	177.6
	OFF	137.4	161.2	169.1	173.1	175.5	177.1	178.2	179.0

12-8. (A) Pump control ON/OFF Conditions (Only for single and Easy-link system)

To run circulation pumps efficiently and effectively, the 510 Indoor / 510 Outdoor offers mode of pump control. The following table shows the pump control ON/OFF conditions.

"Re-circulation mode"

These functions enable the re-circulation pump to be controlled by the following conditions.

ON/OFF Conditions	Re-circulation mode
Conditions that activate the pump	The BTU requirement is more than 18,600 BTU/h* OR 30 minutes have elapsed after previous operation
Conditions that deactivate the pump	4 minutes after activation, if the computer detects a BTU requirement of less than 14,800 BTU/h, the computer will stop the pump in 90 seconds.

*The computer records the inlet temperature and the flow rate of the pump during the final minute of its previous operation when calculating the BTU requirement.

12-8.(B) Pump control ON/OFF conditions: BTU requirements

A. Calculating the ON/OFF conditions of the pump

【Condition needed to turn the pump ON】

$(T_{set} - T_{in}) \times GPM \times 500 > 18{,}600$

【Condition needed to turn the pump OFF】

5 minutes after activation, if the computer detects a BTU requirement of less than 18,600 BTU/h, the computer will stop the pump 90 seconds.

$(T_{set} - T_{in}) \times GPM \times 500 < 14{,}880$ or $T_{in} = T_{set}$

Where: T_{set} = Set temperature and T_{in} = Inlet temperature

B. Calculation example

Set temperature: T_{set} = 120 ˚F Flow rate = 2.5 GPM

【Condition needed to turn the pump ON】

$(120 - T_{in}) \times 2.5 \times 500 > 18{,}600$ $T_{in} < 108.1$˚F

【Condition needed to turn the pump OFF】

$(120 - T_{in}) \times 2.5 \times 500 < 14{,}880$ $T_{in} > 108.1$˚F

C. ON/OFF table

Set temperature (˚F)		Flow rate (GPM)							
		0.5	1.0	1.5	2.0	2.5	3.0	3.5	4.0
113	ON	38.6	75.8	88.2	94.4	98.1	100.6	102.4	103.7
	OFF	53.8	83.4	93.3	98.2	101.2	103.1	104.5	105.6
122	ON	47.6	84.8	97.2	103.4	107.1	109.6	111.4	112.7
	OFF	62.8	92.4	102.3	107.2	110.2	112.1	113.5	114.6
131	ON	56.6	93.8	106.2	112.4	116.1	118.6	120.4	121.7
	OFF	71.8	101.4	111.3	116.2	119.2	121.1	122.5	123.6
140	ON	65.6	102.8	115.2	121.4	125.1	127.6	129.4	130.7
	OFF	80.8	110.4	120.3	125.2	128.2	130.1	131.5	132.6
158	ON	83.6	120.8	133.2	139.4	143.1	145.6	147.4	148.7
	OFF	98.8	128.4	138.3	143.2	146.2	148.1	149.5	150.6
167	ON	92.6	129.8	142.2	148.4	152.1	154.6	156.4	157.7
	OFF	107.8	137.4	147.3	152.2	155.2	157.1	158.5	159.6
185	ON	110.6	147.8	160.2	166.4	170.1	172.6	174.4	175.7
	OFF	125.8	155.4	165.3	170.2	173.2	175.1	176.5	177.6

12-9. Multi-unit system ON/OFF conditions

In an Easy-Link system, the amount of 510 Indoor or 510 Outdoor called on to activate depends on the **FLOW RATE** and the **SET TEMPERATURE**.

1. Condition required to activate an additional 510 Indoor or 510 Outdoor:

Flow rate required to activate additional 510 Indoor or 510 Outdoor = A × n

Where **n** = number of currently activated 510 Indoors or 510 Outdoors

and **A** is dependent on the set temperature. See table below:

Set temperature		**Factor "A"**	
˚F	˚C	GPM	L/min
100 - 122	37 - 50	3.4	13
131	55	3.2	12
140	60	2.9	11
149	65	2.6	10
158 - 167	70 - 75	2.4	9
176 - 185	80 - 85	2.1	8

2. Condition required to reduce the number of activated 510 Indoors or 510 Outdoors:

A. **In the case of reducing down from two units of 510 Indoor or 510 Outdoor to one unit of 510 Indoor or 510 Outdoor: Flow rate = A / 1.7**

B. **All other cases: Flow rate = A × (n - 2)**

3. Example: Set temperature = 122˚F in a four unit system and priority unit is No. 1

To activate additional 510 Indoor or 510 Outdoor

Unit No.	Flow rate	
	GPM	L/min
No.1 ON	0.75	3.0
No.2 ON	3.4	13
No.3 ON	6.8	26
No.4 ON	10.2	39

To reduce number of activated 510 Indoor or 510 Outdoor

Unit No.	Flow rate	
	GPM	L/min
No.4 OFF	6.8	26
No.3 OFF	3.4	13
No.2 OFF	2.0	7.6
No.1 OFF	0.37	1.5

12-10. High-Altitude Region Support Functions (FM+, FM++ and FM+++)

<Using these functions>

The high-altitude region support functions have four operation levels, with the appropriate level being set up by the installer until the abnormal sound problem is solved. The desired level can be specified at the left bank of dipswitches (No.4 and No.5) on the computer board. See the table in the next page.

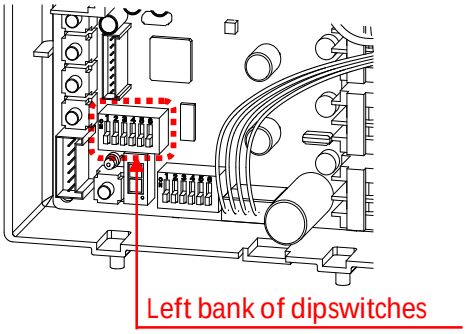

Level	Elevation	Function	Setting Method
0	0 to 2,000 ft (DEFAULT)	Standard setting (Default)	Left bank of dipswitches No.4 OFF No.5 OFF
1	2,000 to 4,000ft	**FM+ function** ・the fan motor speed increased by 6% (510 Indoor) ・the fan motor speed increased by 4% (510 Outdoor)	Left bank of dipswitches **No.4 ON** No.5 OFF
2	4,000 to 6,000ft	**FM++ function** ・the fan motor speed increased by 12% (510 Indoor) ・the fan motor speed increased by 8% (510 Outdoor)	Left bank of dipswitches No.4 OFF **No.5 ON**
3	Over 6,000ft	**FM+++ function*** ・the fan motor speed increased by 18% (510 Indoor) ・the fan motor speed increased by 12% (510 Outdoor)	Left bank of dipswitches **No.4 ON** **No.5 ON**
4	Consult our Technical Services Department. If the abnormal sound problem persists even with a "Level 3" setting, please contact our Technical Service Department. for advice. Note that there are many high risks associated with manually changing the manifold pressures.		

*510 models installation manual doesn't mention this function for safety purposes.

12-11. Relay selection for the pump control connection

The maximum current capacity of 510 Indoor or 510 Outdoor pump control connection is 1 amp.
Before using any relay with the pump control, please check the specifications of that particular relay to ensure that the current value through the coil will not exceed 1 amp.

For example:
To the right, there is a sample of relay specifications from an arbitrary brochure. You can select either the 120 VAC or 240 VAC relay, because their current values are less than 1A (1,000mA).

Coil Data @ 25°C

		Nominal Power	Maximum Power
KRP KRPA	AC	2VA	Enclosed Models - 4VA
	DC	1.2W	Enclosed Models - 3W
KA	AC	2VA	Open Models - 4VA
	DC	125mW per movable arm	Open Models - 4W

Duty Cycle: Continuous.
Initial Insulation Resistance: KRP, KRPA - 1000 Megohms, min.
KA - 100 Megohms, min.

Coil Data @ 25°C

	Nominal Voltage	DC Resistance (Ω) ±10%	Nominal Coil Current (mA)
DC Coils	6	32	188
	12	120	100
	24	472	51
	48	1,800	26.6
	110	10,000	11.5
	220	Use 110V relay with 10,000 Ω 5W Resistor in series	
AC Coils	6	6	335
	12	24	168
	24	85	84
	120	2,250	17.5
	240	9,110	8.75

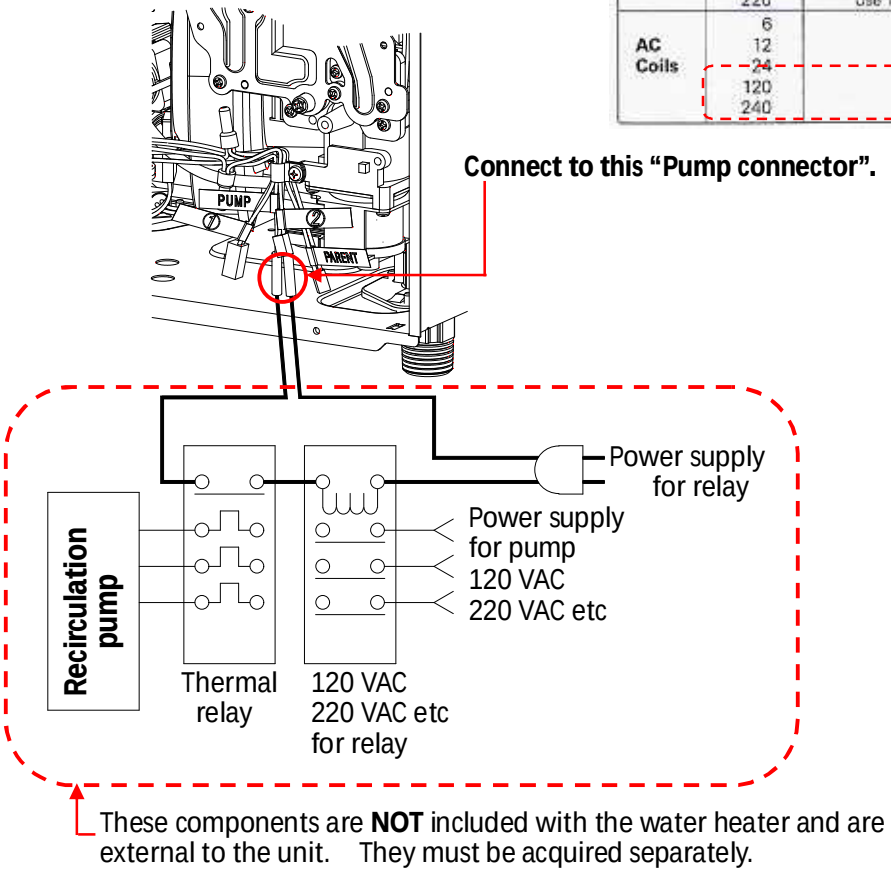

These components are **NOT** included with the water heater and are external to the unit. They must be acquired separately.

12-12. Adjusting manifold gas pressure

The manifold gas pressure on the 510 Indoor or 510 Outdoor can be adjusted by following the procedures below.

WARNING

Adjusting the manifold pressure can cause unexpected combustion conditions during operation, which can cause a health hazard, damage the 510 Indoor or 510 Outdoor, and/or shorten its lifespan. Therefore, changing the manifold pressure is not recommended unless there are very strong reasons to do so (e.g. high elevation installations), and with the consultation of the Technical Services Department.

Adjusting maximum manifold pressure

1. Ensure that 510 Indoor or 510 Outdoor is not in operation.
2. Remove the screw off the manifold port of the 510 Indoor or 510 Outdoor. (Figure 1)
3. Connect a manometer to the manifold port using a tube (Figure 2). Ensure that this connection is secure enough to prevent gas leak.
4. Run water through the 510 Indoor or 510 Outdoor to activate its operation. If presence of a gas leak is detected, immediately shut off the 510 Indoor or 510 Outdoor and inspect the tube/manifold connection; otherwise, proceed onto the next step.
5. Press and hold down the **"MAX"** button on the computer board. While holding down the "MAX" button, press either the **"Increase"** or **"Decrease"** button to increase or decrease the manifold gas pressure, respectively (Figure 3). Refer to the manometer to verify that pressure has been set to desired value.
6. After gas pressure has been set, deactivate the 510 Indoor or 510 Outdoor, remove the manometer tube, and replace the port screw.

Adjusting minimum manifold pressure

1. Ensure that 510 Indoor or 510 Outdoor is not in operation.
2. Remove the screw off the manifold port of the 510 Indoor or 510 Outdoor. (Figure 1)
3. Connect a manometer to the manifold port using a tube (Figure 2). Ensure that this connection is secure enough to prevent gas leak.
4. Run water through the 510 Indoor or 510 Outdoor to activate its operation. If presence of a gas leak is detected, immediately shut off the 510 Indoor or 510 Outdoor and inspect the tube/manifold connection; otherwise, proceed onto the next step.
5. Press and hold down the **"MIN"** button on the computer board. While holding down the "MIN" button, press either the **"Increase"** or **"Decrease"** button to increase or decrease the manifold gas pressure, respectively (Figure 3). Refer to the manometer to verify that pressure has been set to

desired value.

6. After gas pressure has been set, deactivate the 510 Indoor or 510 Outdoor, remove the manometer tube, and replace the port screw.

Figure 1

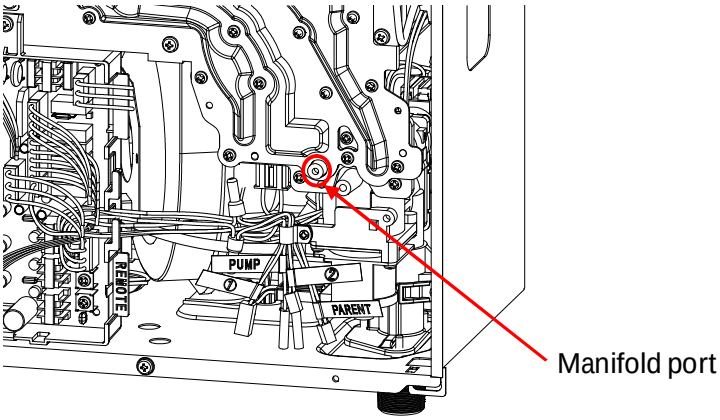

Figure 2

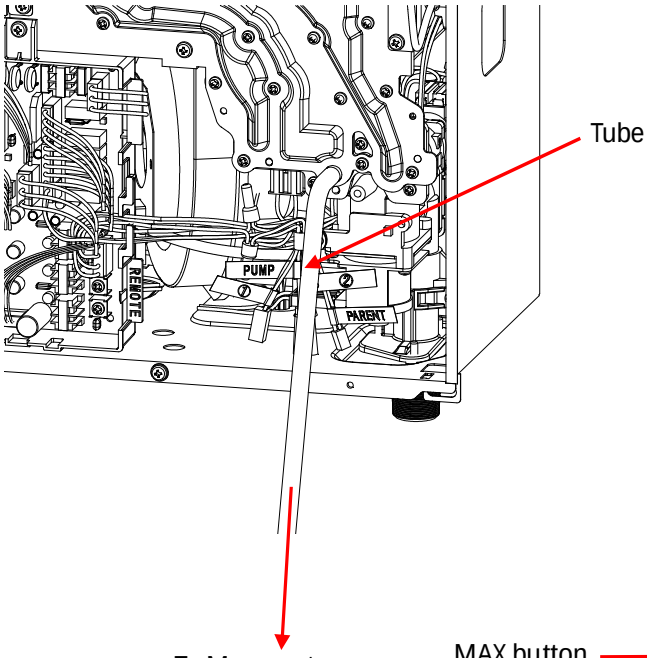

Figure 3

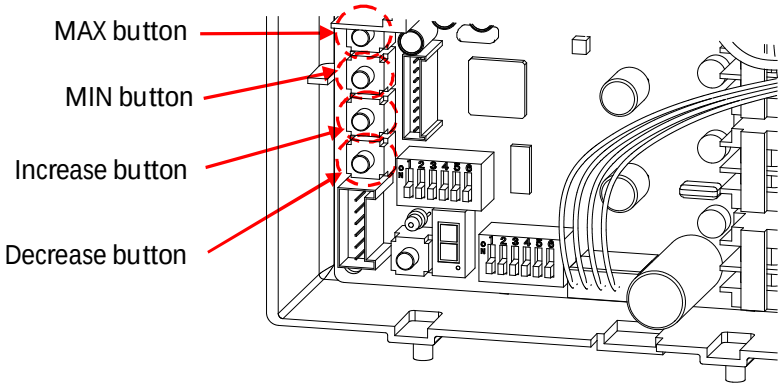

12-13. Manually adjusting the fan motor speed

While the FM+ dipswitch will automatically increase the fan speed by 6%, the fan motor speed on the 510 Indoor or 510 Outdoor can also be manually adjusted. In order to perform manual adjustments to the speed, a 9007603005 remote controller is required.

WARNING

Manually adjusting the fan motor speed of the 510 Indoor or 510 Outdoor will change the amount of intake air for combustion, which can cause excess CO emission from the exhaust chamber if the fan motor speed is set incorrectly. Therefore, this procedure should **never** be performed unless the Technical Services Department has given consent and authorization.

Adjusting maximum fan motor speed

1. While 510 Indoor or 510 Outdoor is in operation, set dipswitch No.3 to the "ON" position. (Figure 1)
2. On the temperature remote controller, display mode #3 (fan motor speed) by entering the "Diagnostics mode" (Refer to Section 12-1).
3. Press and hold down the **"MAX"** button on the computer board. While holding down the "MAX" button, press either the **"Increase"** or **"Decrease"** button to increase or decrease the fan motor speed, respectively (Figure 2). Refer to the remote controller display to verify that speed has been set to desired value.
4. After fan speed has been set, set dipswitch No.3 back to the "OFF" position.

Adjusting minimum fan motor speed

1. While 510 Indoor or 510 Outdoor is in operation, set dipswitch No.3 to the "ON" position. (Figure 1)
2. On the temperature remote controller, display mode #3 (fan motor speed) by entering the "Diagnostics mode" (Refer to Section 12-1).
3. Press and hold down the **"MIN"** button on the computer board. While holding down the "MIN" button, press either the **"Increase"** or **"Decrease"** button to increase or decrease the fan motor speed, respectively (Figure 2). Refer to the remote controller display to verify that speed has been set to desired value.
4. After fan speed has been set, set dipswitch No.3 back to the "OFF" position.

Upper bank of dipswitch settings

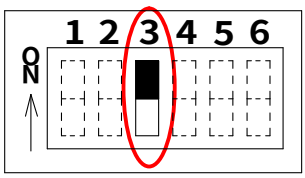

Figure 1

The dark square is the direction the dipswitch should be set to.

Figure 2

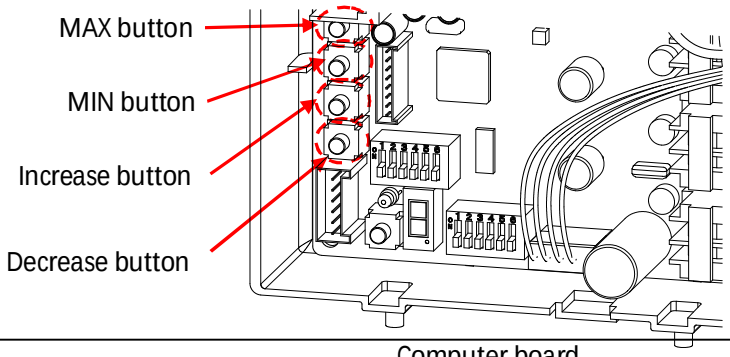

Computer board

12-14. Freeze protection system

There are two features to the 510 Indoor or 510 Outdoor's freeze protection system: the automatic firing system and the ceramic heating blocks. The automatic firing system allows the 510 Indoor or 510 Outdoor to briefly fire on for about 4 seconds and the ceramic heating blocks will heat up whatever portion of the heat exchanger the blocks are strapped to. The firing system mainly focuses on providing freeze protection around the heat exchanger drum. The three heating blocks focus on protecting the inlet and outlet piping inside the 510 Indoor or 510 Outdoor, as well as the front drum pipe. The conditions to activate either feature are different from each other. However, the two features are not mutually exclusive, because they focus on different areas of the 510 Indoor or 510 Outdoor. As long as each particular feature's activation requirements are met, it is possible for both features to operate at the same time.

Automatic firing system

Activation conditions will depend on the on whether or it is an indoor / direct-vent or outdoor installation. Gas and electrical power are required for this feature to operate.

510 Indoor installation:

After 5 minutes have elapsed since the 510 Indoor or 510 Outdoor's previous firing operation, the computer will continually check the temperatures of the inlet and output thermistors (the output thermistor is the one that checks the temperature of the water immediately leaving the heat exchanger, not the water leaving the 510 Indoor or 510 Outdoor, which is mixed with water from the bypass valve). The automatic firing system will not activate at all unless these 5 minutes have elapsed.

When the computer checks for these temperatures, the freeze protection firing system will activate if:

$T_{in} \leqq 37°F$ and $T_{out} \leqq 50°F$ **OR** $T_{out} \leqq 37°F$

where T_{in} is the temperature of inlet thermistor and T_{out} is the temperature of the output thermistor.

To sum it up in a chart:

Case	5 minutes have elapsed since prior operation?	Inlet thermistor temperature	Output thermistor temperature	Will automatic firing be activated?
1	No	Any	Any	NO
2	Yes	Above 37°F	Any	NO
3	Yes	Any	Above 50°F	NO
4	Yes	37°F and below	50°F and below	YES
5	Yes	Any	37°F and below	YES

510 Outdoor installation

After 25 minutes have elapsed since the 510 Indoor or 510 Outdoor's previous firing operation, the computer will continually check the temperatures of the inlet and output thermistors. The automatic firing system will not activate at all unless these 25 minutes have elapsed.

When the computer checks for these temperatures, the freeze protection firing system will activate if:

$T_{in} \leqq 37°F$ and $T_{out} \leqq 50°F$ **OR** $T_{out} \leqq 37°F$

where T_{in} is the temperature of inlet thermistor and T_{out} is the temperature of the output thermistor.

To sum it up in a chart:

Case	25 minutes have elapsed since prior operation?	Inlet thermistor temperature	Output thermistor temperature	Will automatic firing be activated?
1	No	Any	Any	NO
2	Yes	Above 37°F	Any	NO
3	Yes	Any	Above 50°F	NO
4	Yes	37°F and below	50°F and below	YES
5	Yes	Any	37°F and below	YES

Ceramic heating blocks

The blocks will only activate based on what the freeze protection thermostat senses. The thermostat is located on the fan motor, close in vicinity to the inlet and outlet pipes within the 510 Indoor or 510 Outdoor. Electrical power is required for this feature to operate.

The heating blocks will activate if the thermostat senses a surrounding temperature **below 36.5°F.**

Once they are on, the heating blocks will only deactivate if surrounding temperatures reach **above 46.4°F.**

12-15. Draining and cleaning the inlet water filter

1. Close the manual gas shut off valve.

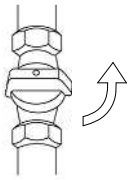

2. Turn off power to the 510 Indoor or 510 Outdoor, wait a few seconds. And then turn on again.

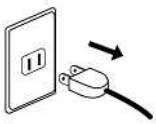

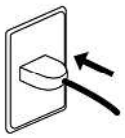

3. Wait 30 seconds for water valves starts to completely open. Then turn off power to the 510 Indoor or 510 Outdoor, yet again.

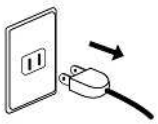

4. Close the water shut-off valve.

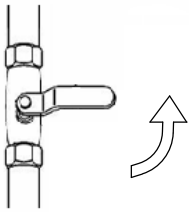

5. Open all hot water taps in the house. When the all water flow has ceased, close all hot water taps.

6. Have a bucket or pan to catch the water from the drain plugs of the 510 Indoor or 510 Outdoor. **Unscrew** the drain plugs to *drain all the water out of the 510 Indoor or 510 Outdoor.*

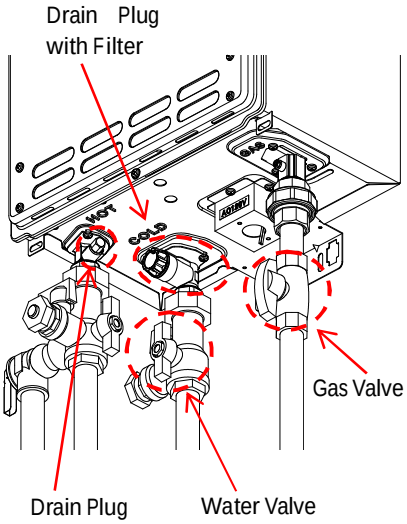

7. Wait a few minutes to ensure all water has completely drained from unit.

8. Clean the filter: Inspect the water filter located within the cold inlet. With a tiny brush, clean the water filter of any debris which may have accumulated and reinsert the filter back into the cold water inlet.

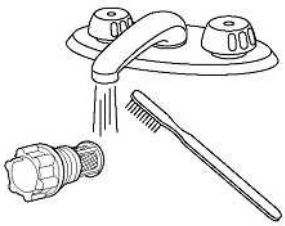

9. Securely screw the drain plugs back into place. **Hand-tighten only.**

13. Components diagrams

Case assembly

510 Indoor

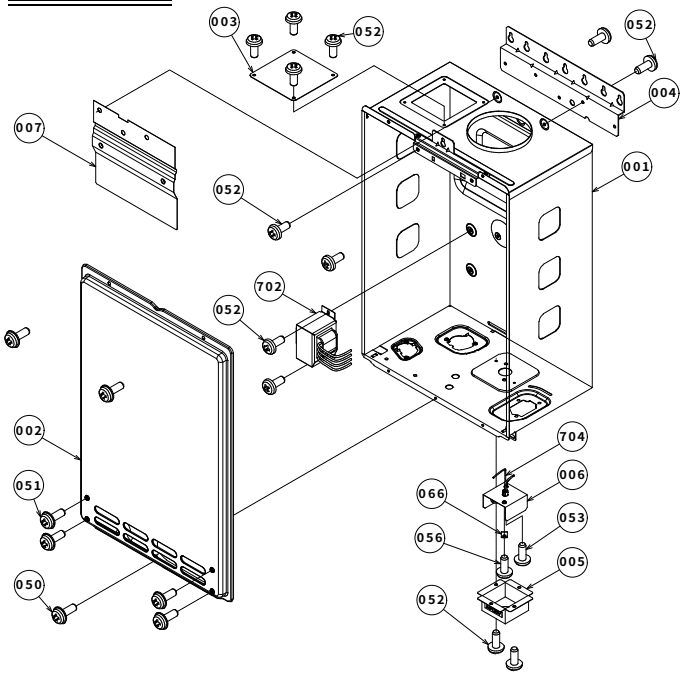

510 Outdoor

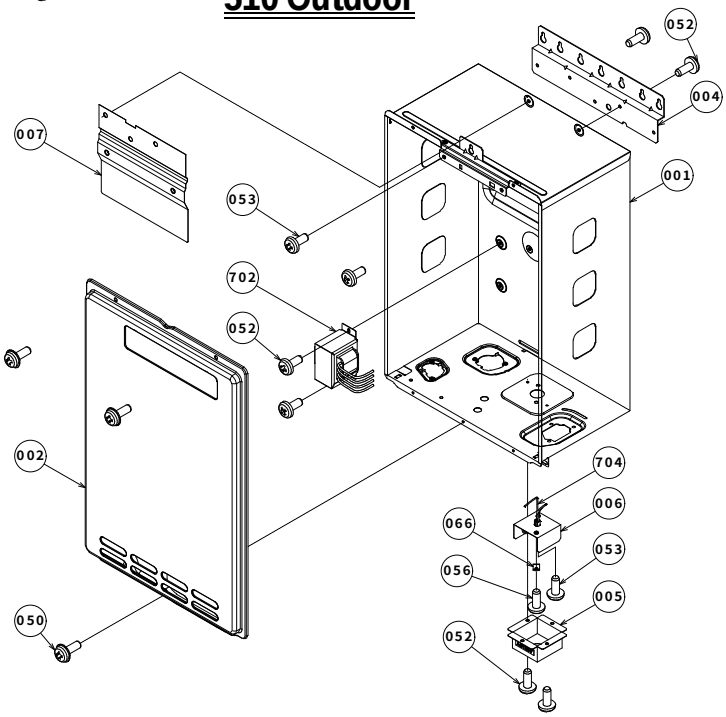

Burner assembly

510 Indoor/Outdoor

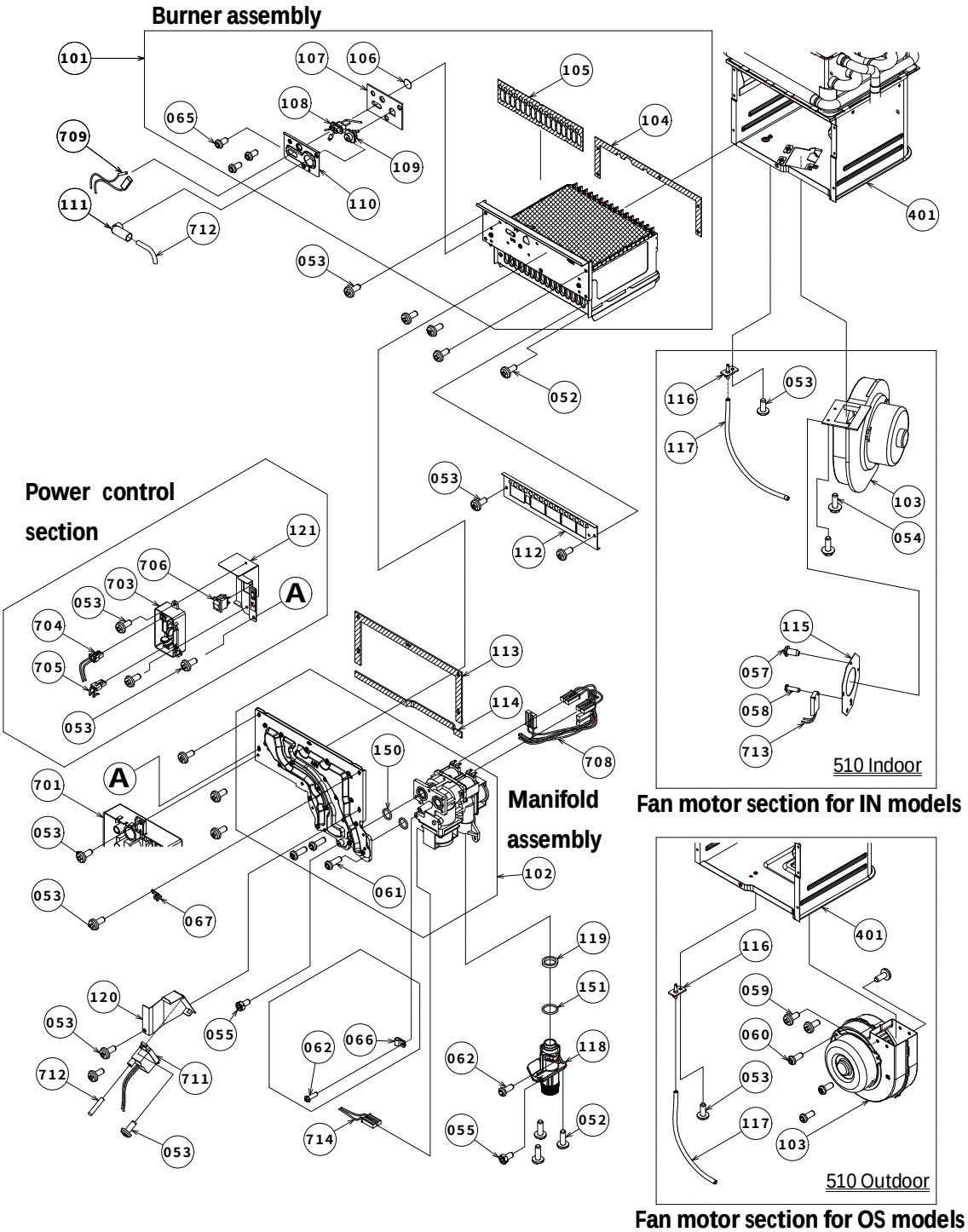

Fan motor section for IN models

Fan motor section for OS models

Computer board assembly

510 Indoor/Outdoor

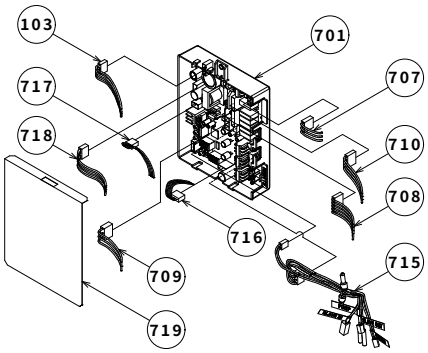

Water way assembly

510 Indoor/Outdoor

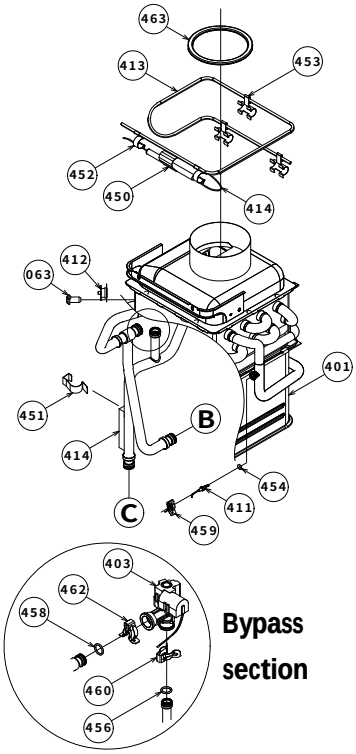

Bypass section

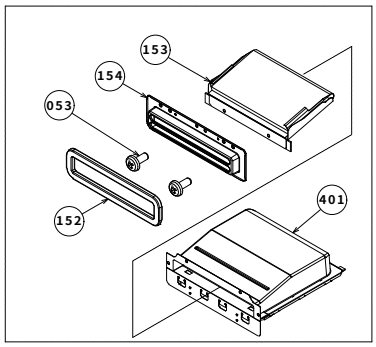

Exhaust section (OS model)

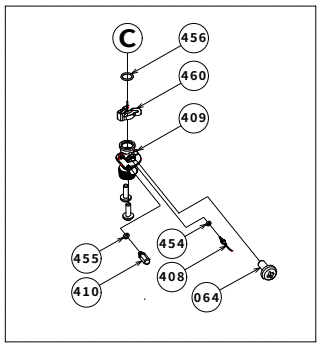

Water outlet section

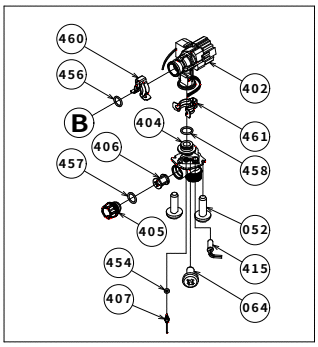

Water inlet section

14. Parts list

Item #	Part #	Description	Common parts for other models
001	319143-151	Case assembly (IN)	310
	319143-211	Case assembly (Out)	310
002	319143-174	Front cover (IN)	
	319143-175	Front cover (Out)	
003	319143-150	Air blockage plate	110, 310
004	319143-184	Bracket	110, 310
005	319143-014	Junction box	520, 110, 310, 910, 710,
006	319143-128	Junction box inner plate	520, 110, 310
007	319143-221	Back guard panel	310
050	319143-025	Screw M4×12 (W/Washer)	*
051	319143-325	Screw M4×10 (W/Washer)	*
052	319143-026	Screw M4×10 (Coated)	*
053	319143-060	Screw M4x10	*
054	319143-326	Hex head screw M4×12 (W/Washer)	*
055	319143-063	Hex head screw M4x8	*
056	319143-372	Screw M4x10	*
057	319143-330	Screw M3x6 SUS3	*
058	319143-327	Screw M3x10	*
059	319143-061	Pan screw M4x12 (W/Washer)	*
060	319143-332	Pan screw M4x10 FEZN	*
061	319143-201	Tap tight screw M4x12 FEZN	*
062	319143-062	Pan screw M4x10	*
063	319143-087	Screw M3x6	*
064	319143-328	Screw M4x6	*
065	319143-059	Pan screw M4x8	*
066	319143-143	Nylon clamp	520, 110, 310, 710
067	319143-048	Wire clamp 60	520, 110, 310, 910, 710
101	319143-030	Burner assembly	520, 310
102	319143-046	Manifold with gas valve assembly LP	520, 310
	319143-368	Manifold with gas valve assembly NA	310

Item #	Part #	Description	Common parts for other models
103	319143-043	Fan motor (IN)	520, 310, 910, 710
	319143-217	Fan motor (Out)	310
104	319143-032	Burner holder gasket	520, 310, 910
105	319143-031	Burner gasket	520, 110, 310
106	319143-033	Burner window	520, 110, 310, 910, 710
107	319143-034	Rod holder gasket	520, 110, 310, 910, 710
108	319143-035	Flame rod	520, 310, 910, 710
109	319143-037	Igniter rod	520, 310, 910, 710
110	319143-036	Rod holder	520, 310, 910, 710
111	319143-038	Rod cap	520, 110, 310, 910, 710
112	319143-156	Burner damper	310
113	319143-044	Manifold gasket A	520, 110, 310, 910
114	319143-045	Manifold gasket B	520, 110, 310, 910
115	319143-367	Fan damper	310
116	319143-042	Pressure port for	520, 310, 910, 710
117	319143-041	Combustion chamber tube (IN)	520, 310
	319143-344	Combustion chamber tube (Out)	310, 910
118	319143-050	Gas inlet	520, 110, 310
119	319143-049	Gas inlet ring	520, 110, 310
120	319143-051	Igniter plate	520, 110, 310, 910, 710
121	319143-176	Surge box plate	
150	319143-350	O-ring P18 NBR (Black)	110, 310, 910
151	319143-057	O-ring P20 NBR (Black)	520, 110, 310, 910
152	319143-206	Silicon ring	310, 910
153	319143-216	Rain protection plate in Exhaust chamber	110, 310
154	319143-219	Exhaust port	110
401	319143-369	Heat exchanger assembly (IN)	
	319143-177	Heat exchanger assembly (Out)	
402	319143-178	Flow adjustment valve/Flow sensor	
403	319143-186	Bypass valve	
404	319143-193	Water inlet	110, 310

Item #	Part #	Description	Common parts for other models
405	319143-197	Inlet drain plug	110, 310
406	319143-198	Inlet water filter	110, 310
407	319143-085	Inlet thermistor	520, 910, 710
408	319143-190	Mixing thermistor	910
409	319143-194	Water outlet	110, 310
410	319143-199	Outlet drain plug	110, 310, 910
411	319143-096	Output thermistor	520, 910, 710
412	319143-095	Hi-Limit switch	520, 910, 710
413	319143-149	Overheat-cut-off fuse	110, 310, 910
414	319143-200	Heater	110, 310
415	319143-078	Inlet heater	520, 110, 310, 710
450	319143-088	Pipe heater fixing plate	520, 110, 310, 910, 710
451	319143-125	Heater fixing plate 16	520, 110, 310, 910, 710
452	319143-066	Fuse fixing plate 18	520, 110, 310, 910, 710
453	319143-146	Fuse fixing plate 14	110, 310
454	319143-082	O-ring P4 FKM	520, 110, 310, 910, 710
455	319143-080	O-ring P6 FKM	520, 110, 310, 910, 710
456	319143-100	O-ring P14 FKM	520, 110, 310, 910, 710
457	319143-091	O-ring P15 FKM	520, 110, 310, 910, 710
458	319143-083	O-ring P16 FKM	520, 110, 310, 910, 710
459	319143-097	Fastener “4-11”	110, 310
460	319143-105	Fastener “14-22”	520, 110, 310, 910, 710
461	319143-226	Fastener “16A”	110, 310
462	319143-205	Fastener “16-25A”	
463	319143-065	Silicon ring	520, 110, 310, 710
701	319143-179	Computer board	
702	319143-182	Transformer	110, 310
703	319143-168	Surge box	110, 310
704	319143-138	AC 120V wire	520, 310
705	319143-180	Transformer wire	310

Item #	Part #	Description	Common parts for other models
706	319143-141	AC 120V Power ON-OFF switch	520, 110, 310
707	319143-181	Switch wire	
708	319143-188	Gas valve wire	110, 310
709	319143-189	Flame rod wire	110, 310
710	319143-187	EH-IG wire	
	319143-210	EH-IG wire with freeze protection thermostat	110, 310
711	319143-052	Igniter	520, 110, 310, 910, 710
712	319143-039	High voltage igniter cable	520, 110, 310, 910
713	319143-185	Freeze protection thermostat	110, 310, 710
714	319143-133	Proportional gas valve wire	520
715	319143-204	Pump and multi cable	
716	319143-195	Thermistors wire	
717	319143-203	RS-VG wire	
718	319143-202	Water valves wire	
719	319143-191	Computer board cover	910

15. Revisions

Version	Description of changes	Date
1.00	First edition	11/01/10