ASTRO®
Spectra® /Spectra Plus Consolette

Instruction Manual

MOTOROLA
intelligence everywhere™

ASTRO® Spectra®/Spectra Plus
Consolette
Instruction Manual

Motorola, Inc.
8000 West Sunrise Boulevard
Fort Lauderdale, Florida 33322

6881086C22-B

Foreword

The information contained in this manual relates to all ASTRO™ Spectra®/Spectra Plus Consolettes, unless otherwise specified. This manual provides sufficient information to enable service shop personnel to troubleshoot and repair an ASTRO Spectra/Spectra Plus Consolette to the component level.

Safety Information

Before operating an ASTRO Spectra/Spectra Plus Consolette, please read the “Consolette Installation Guidelines” on page ix in the front of this manual.

Manual Revisions

Changes which occur after this manual is printed are described in FMRs (Florida Manual Revisions). These FMRs provide complete replacement pages for all added, changed, and deleted items. To obtain FMRs, contact the Radio Products Services Division (see “Appendix B - Replacement Parts Ordering”).

Computer Software Copyrights

The Motorola products described in this manual may include copyrighted Motorola computer programs stored in semiconductor memories or other media. Laws in the United States and other countries preserve for Motorola certain exclusive rights for copyrighted computer programs, including, but not limited to, the exclusive right to copy or reproduce in any form the copyrighted computer program. Accordingly, any copyrighted Motorola computer programs contained in the Motorola products described in this manual may not be copied, reproduced, modified, reverse-engineered, or distributed in any manner without the express written permission of Motorola. Furthermore, the purchase of Motorola products shall not be deemed to grant either directly or by implication, estoppel, or otherwise, any license under the copyrights, patents or patent applications of Motorola, except for the normal non-exclusive license to use that arises by operation of law in the sale of a product.

Document Copyrights

No duplication or distribution of this document or any portion thereof shall take place without the express written permission of Motorola. No part of this manual may be reproduced, distributed, or transmitted in any form or by any means, electronic or mechanical, for any purpose without the express written permission of Motorola.

Disclaimer

The information in this document is carefully examined, and is believed to be entirely reliable. However, no responsibility is assumed for inaccuracies. Furthermore, Motorola reserves the right to make changes to any products herein to improve readability, function, or design. Motorola does not assume any liability arising out of the applications or use of any product or circuit described herein; nor does it cover any license under its patent rights nor the rights of others.

Trademarks

MOTOROLA, the Stylized M logo, ASTRO, and Spectra are registered in the US Patent & Trademark Office. All other product or service names are the property of their respective owners.

Table of Contents

Foreword . . . ii
Safety Information . . . ii
Manual Revisions . . . ii
Computer Software Copyrights . . . ii
Document Copyrights . . . ii
Disclaimer . . . ii
Trademarks . . . ii
List of Figures . . . vi
List of Tables . . . vii
Consolette Installation Guidelines . . . ix
RF Operational Characteristics . . . ix
Product Safety and RF Exposure Compliance . . . ix
Operational Cautions . . . ix
Lightning and Surge Suppression . . . ix
Safe Handling of CMOS Integrated-Circuit Devices . . . xi
ASTRO Spectra Consolette Model Chart . . . xiii
ASTRO Spectra Plus Consolette Model Chart . . . xv
Specifications for ASTRO Spectra/Spectra Plus VHF Models . . . xvi
Specifications for ASTRO Spectra/Spectra Plus UHF Models . . . xvii
Specifications for ASTRO Spectra/Spectra Plus 800MHz Models . . . xviii
ASTRO Spectra Consolette Options . . . xix

1 - Introduction . . . 1
General . . . 1
Options . . . 2
Hardware Options . . . 2
Software Options . . . 2
Encryption Options . . . 3

2 - Installation . . . 5
Planning the Installation . . . 5
Ventilation . . . 5
Station Mounting Procedures . . . 5
Desktop Installation . . . 5
Wall Mounting . . . 5
Antenna Connections . . . 6
Power and Ground Connection . . . 7
General . . . 7
AC Power Input . . . 7
DC Input Power (Optional) . . . 8
DIP Switch and Jumper Settings . . . 8
Audio Interface Board Settings . . . 9
Tone Remote Control Board Settings . . . 10
Clock/VU Meter Setup (Optional) . . . 12
General . . . 12
Operation . . . 12
Time Setting . . . 12
Month and Day Setting . . . 13
Year Setting . . . 13

Accessory Connector 2 13
Accessory Connector 3 15
Remote Control Installation 16
Digital Remote Control Installation 16
Tone Remote Control Installation 17

3 - Theory of Operation 19
Introduction 19
General 19
Audio Interface Board 21
General Description 21
Detailed Description 21
Tone Remote Control Board 23
General Description 23
Detailed Description 25
Power-Up 32
Receive 32
Transmit 32
Power-Up Self-Check Errors 32

4 - Maintenance 35
Alignment 35
Programming 35
Codeplug Programming 35
FLASHport Programming 35
Maintenance and Troubleshooting Procedures 37
Recommended Test Equipment and Service Aids 37
Electrical 37
Mechanical 37
Disassembly and Reassembly 38
Top Cover 38
ASTRO Transceiver 39
AIB/TRC Interface Board 40
Power Supply 42
Fan 43
Control Head (W7 Models Only) 43

5 - Cable Diagrams 45
Standard Cables 45
Optional Cables 49

6 - Diagrams and Parts Lists 51
List of Troubleshooting Charts 51
List of Schematics, Boards, and Parts Lists 51
Troubleshooting Charts 53
Consolette Does Not Work Troubleshooting Chart 53
Power Problem Troubleshooting Chart 54
TRC Local TX Troubleshooting Chart 55
TRC RX Audio Troubleshooting Chart 56
Trunking Tones Not Heard at Remote Console Troubleshooting Chart 57
TRC Board DC Voltage Troubleshooting Chart 58
TRC TX Audio Troubleshooting Chart 58
AIB TX Audio Troubleshooting Chart 59
AIB RX Audio Troubleshooting Chart 60
AIB DC Power Troubleshooting Chart 61
Schematics, Boards, and Parts Lists 63
ASTRO Spectra Consolette Exploded View 63

TRN 7393B Control Head Interface Board Schematic 64
TRN7393B Component Location Diagram - Side 1 64
TRN7393B Component Location Diagram - Side 2 64
ASTRO Spectra Consolette Exploded View Parts List 65
TRN7393B Control Head Interface Board Parts List. 65
Tone Remote Control Board Block Diagram. 66
Audio Interface Board Block Diagram. 67
TRN7391C Audio Interface Board Schematic Diagram (Sheet 1 of 2) 68
TRN7391C Audio Interface Board Schematic Diagram (Sheet 2 of 2) 69
TRN7391C Audio Interface Board 70
TRN7391C Audio Interface Board Parts List 71
PLN1360C Tone Remote Control Board Component Location Diagram (viewed from side 1) 73
PLN1360C Tone Remote Control Board Schematic Diagram (Sheet 1 of 6) 74
PLN1360C Tone Remote Control Board Schematic Diagram (Sheet 2 of 6) 75
PLN1360C Tone Remote Control Board Schematic Diagram (Sheet 3 of 6) 76
PLN1360C Tone Remote Control Board Schematic Diagram (Sheet 4 of 6) 77
PLN1360C Tone Remote Control Board Schematic Diagram (Sheet 5 of 6) 78
PLN1360C Tone Remote Control Board Schematic Diagram (Sheet 6 of 6) 79
PLN1360C Tone Remote Control Board Electrical Parts List. 80

A - Appendix A - Cross Patch Configuration 85
General Description 85
Detailed Description 85
Level Settings 86
Radio-Wide Changes Using CPS 86
Audio Degradation Issues. 87

B - Appendix B - Replacement Parts Ordering. 89
Basic Ordering Information 89
Transceiver Board and VOCON Board Ordering Information. 89
Motorola Online. 89
Mail Orders 89
Telephone Orders 90
Fax Orders 90
Parts Identification. 90
Product Customer Service 90

List of Figures

Figure 1. Wall Mounting 6
Figure 2. Rear Panel 6
Figure 3. Power Supply VAC-Select Switch 7
Figure 4. Accessory 2 and 3 Mating Connector 16
Figure 5. Consolette Block Diagram 19
Figure 6. Consolette Front Panel - Model W7 20
Figure 7. Consolette Front Panel - Model W9 20
Figure 8. Remote Key-Up 24
Figure 9. TRC to ACIM Cable Diagram 30
Figure 10. TRC to ACIM Cable Orientation (not provided by Motorola) 31
Figure 11. ASTRO Spectra Programming Hardware Configuration 36
Figure 12. ASTRO Spectra Plus Programming Hardware Configuration 36
Figure 13. Removing the Top Cover 38
Figure 14. Removing the Transceiver 39
Figure 15. Removing the AIB/TRC Board 41
Figure 16. Removing the Power Supply 42

List of Tables

Table 1. Audio Interface Board DIP Switch Settings 9
Table 2. Audio Interface Board Jumper Settings 9
Table 3. Tone Remote Control Board DIP Switch Settings (S100) 10
Table 4. Tone Remote Control Board DIP Switch Settings (S101) 10
Table 5. Tone Remote Control Board Jumper Settings 11
Table 6. Tone Remote Control Board Plug Settings. 11
Table 7. Tone Table Selection 12
Table 8. Accessory Connector 2 - Pin Descriptions 14
Table 9. Accessory Connector 3 - Pin Descriptions 15
Table 10. Accessory Connector 2 Pins: Digital Remote Control Operation 16
Table 11. Accessory Connector 2 Pins: Tone Remote Control Operation 17
Table 12. TRC Function Tone Descriptions 24
Table 13. Accessory Connector 1 (J13) 30
Table 14. Supported IDs. 31
Table 15. ASTRO Spectra Consolette Power-Up Self-Check Error Codes 33
Table 16. ASTRO Spectra Plus Consolette Power-Up Self-Check Error Codes 34
Table 17. Field Programming items 36
Table 18. Power LED Cable Part #3084459T01 (P/O TKN8676). 45
Table 19. RF Coaxial Cable Part #0112004E09 (P/O TKN8676). 45
Table 20. Speaker Cable Part #3084457T01 (P/O TRN7394) 45
Table 21. Control Head Cable 46
Table 22. Radio Cable 47
Table 23. Accessory Cable. 48
Table 24. Clock/VU Cable 49

Notes

Consolette Installation Guidelines

RF Operational Characteristics

Your ASTRO® Spectra® Consolette and ASTRO Spectra Plus Consolette contain a digital mobile wireless two-way radio. When the Consolette is ON, it receives and transmits radio frequency (RF) energy.

Product Safety and RF Exposure Compliance

Caution	**Before using this product, read the operating instructions for safe usage contained in the Product Safety and RF Exposure booklet enclosed with your radio (Motorola Publication part number 6881095C99).**

Operational Cautions

- Because of danger of introducing additional hazards, do not install substitute parts or perform any unauthorized modifications of equipment.
- DO NOT operate the transmitter of any Consolette unless all RF connectors are secure and all connectors are properly terminated.
- All equipment must be properly grounded in accordance with *Motorola Standards and Guideline for Communications Sites "R56"* 68P81089E50 and specified installation instructions for safe operation.
- Slots and openings in the Consolette housing are provided for ventilation. To ensure reliable operation of the product and to protect if from overheating, these slots and openings must not be blocked or covered.
- Only an authorized technician familiar with the Consolette should service equipment.

Lightning and Surge Suppression

General

The installation of Transient Voltage Surge Suppression (TVSS) devices is a requirement for all communication sites and is essential for all facilities where communication-related electronics and electrical equipment are in use. Surges and transient power anomalies are potentially destructive electrical disturbances, the most damaging being over-voltage occurrences and short duration over-voltage events. Sometimes referred to as "spikes," high-energy transient power anomalies can arise from inductive load switching of other events within the power system or capacitive and inductive coupling from environmental events, such as nearby lightning activity. Environmental and inductive power anomalies are wideband occurrences with a frequency range from close to DC to well into the RF high frequency spectrum. It is critical that each point-of-entry (AC, telephone, LAN, signal/control, and RF) into the equipment area be protected against these anomalies. This protection is essential to reduce the risk of personal injury, physical equipment damage, and loss of operations (equipment downtime).

Recommendations

To protect your equipment from lightning and surge damage, do the following:

- Install these TVSS devices as described in Chapter 9, "Transient Voltage Surge Suppression," of the *Motorola Standards and Guideline for Communications Sites "R56"* 68P81089E50 manual.
- Ground all RF transmission lines from the antenna structure to the shelter or building as described in Chapter 6, "External Grounding," of the *Motorola Standards and Guideline for Communications Sites "R56"* 68P81089E50 manual. Upon entering the building, all RF transmission lines shall route through a coaxial RF-type TVSS (or Surge Protection Device).

Recommended Protectors

TVSS devices are available through Motorola's Radio Products Services Division. Installation instructions are generally included with each device. The following listing includes phone line suppressors, AC line surge protectors, coaxial cable in-line lightning arrestors, and coaxial cable ground clamp kits.

Phone Line Suppressors

- RRX4021 - Single Line Suppressor, 3-electrode gas tube protector
- TRN4589 - Dual Line Suppressor, 3-electrode gas tube protector
- RRX4021 - Single Line Suppressor, 3-electrode gas tube protector

AC Line Surge Protectors

- RRX4034 - AC Line Surge Protector, 117VAC line, 7/8" x 14 conduit hole mounting

Coaxial Cable In-Line Lightning Arrestors

- RLN4711 - UHF-Type Connector
- RRX4025 - N-Type Connector
- RRX4032 - Tower Mount Kit

Coaxial Cable Ground Clamp Kits

- RDN5826 - 1/4" or 3/8" Cable Ground Clamp Kit
- RDN5514 - 1/2" Cable Ground Clamp Kit
- RDN5517 - 5/8" to 7/8" Cable Ground Clamp Kit

Safe Handling of CMOS Integrated-Circuit Devices

Introduction

This section will aid you in troubleshooting a malfunctioning Consolette. It is intended to be detailed enough to localize the malfunctioning circuit and isolate the defective component.

Caution

Before using this product, read the operating instructions for safe usage contained in the Product Safety and RF Exposure booklet enclosed with your radio (Motorola Publication part number 6881095C99).

Handling Precautions

Complementary metal-oxide semiconductor (CMOS) devices and other high-technology devices are used in the Consolette. While the attributes of these devices are many, their characteristics make them susceptible to damage by electrostatic discharge (ESD) or high-voltage charges.

Damage can be latent, resulting in failures occurring weeks or months later. Therefore, special precautions must be taken to prevent device damage during disassembly, troubleshooting, and repair. Handling precautions are mandatory for this radio and are especially important in low humidity conditions. DO NOT attempt to disassemble the radio without observing the following handling precautions.

1. Eliminate static generators (plastics, Styrofoam, etc.) in the work area.
2. Remove nylon or double-knit polyester jackets, roll up long sleeves, and remove or tie back loose hanging neckties.
3. Store and transport all static-sensitive devices in ESD-protective containers.
4. Disconnect all power from the unit before ESD-sensitive components are removed or inserted unless otherwise noted.
5. Use a static-safeguarded workstation, which can be accomplished through the use of an antistatic kit (Motorola part number 01-80386A82). This kit includes a wrist strap, two ground cords, a static-control table mat and a static-control floor mat.
6. Always wear a conductive wrist strap when servicing this equipment. The Motorola part number for a replacement wrist strap that connects to the table mat is 42-80385A59.

Parts Replacement and Substitution

Special care should be taken to ensure that a suspected component is actually the one at fault. This special care will eliminate unnecessary unsoldering and removal of parts, which could damage or weaken other components or the printed circuit board (PCB) itself.

When damaged parts are replaced, identical parts should be used. If the identical replacement component is not locally available, check the parts list for the proper Motorola part number and order the component from the Radio Products Services Division.

Notes

ASTRO Spectra Consolette Model Chart

MODEL OR OPTION NUMBER	DESCRIPTION
L04JKH9PW9_	20-25W 136-162MHZ W/Digital Rem Controller
L04KKH9PW9_	20-25W 146-174MHZ W/Digital Rem Controller
L04QKH9PW9_	20-40W 403-433MHZ W/Digital Rem Controller
L04RHH9PW9_	10-25W 438-470MHZ W/Digital Rem Controller
L04RKH9PW9_	20-40W 450-482MHZ W/Digital Rem Controller
L04RKH9PW9_SP01	10-25W 453-488MHZ W/Digital Rem Controller
L04SKH9PW9_	20-40W 482-512MHZ W/Digital Rem Controller
L04UJH9PW9_	35W 806-870MHZ W/Digital Rem Controller
L04JKH9PW7_	20-25W 136-162MHZ W/Local Control
L04KKH9PW7_	20-25W 146-174MHZ W/Local Control
L04QKH9PW7_	20-40W 403-433MHZ W/Local Control
L04RHH9PW7_	10-25W 438-470MHZ W/Local Control
L04RKH9PW7_	20-40W 450-482MHZ W/Local Control
L04RKH9PW7_SP01	10-25W 453-488MHZ W/Local Control
L04SKH9PW7_	20-40W 482-512MHZ W/Local Control
L04UJH9PW7_	35W 806-870MHZ W/Local Control
L146	Tone Rem Control Option (All Local Control Models)

L04JKH9PW9_	L04KKH9PW9_	L04QKH9PW9_	L04RHH9PW9_	L04RKH9PW9_	L04RKH9PW9_SP01	L04SKH9PW9_	L04UJH9PW9_	L04JKH9PW7_	L04KKH9PW7_	L04QKH9PW7_	L04RHH9PW7_	L04RKH9PW7_	L04RKH9PW7_SP01	L04SKH9PW7_	L04UJH9PW7_	L146	ITEM NUMBER	DESCRIPTION
X	X	X	X	X	X	X	X	X	X	X	X	X	X	X	X		HPN4005_	Power Supply, 13.8V, 10-Amp
X	X	X	X	X	X	X	X	X	X	X	X	X	X	X	X		FRN5358_	Fan
X	X	X	X	X	X	X	X	X	X	X	X	X	X	X	X		HLN5558_	Command Board
X	X	X	X	X	X	X	X	X	X	X	X	X	X	X	X		HLN6282_	Power Cord, 100V
X	X	X	X	X	X	X	X	X	X	X	X	X	X	X	X		HLN6344_	Interface Board
X	X	X	X	X	X	X	X	X	X	X	X	X	X	X	X		HLN6458_	Vocoder Controller (VOCON) Board
X	X	X	X	X	X	X	X	X	X	X	X	X	X	X	X		THN6676_	Housing Assembly
X	X	X	X	X	X	X	X	X	X	X	X	X	X	X	X		TKN8676_	Cable Kit
X	X	X	X	X	X	X	X	X	X	X	X	X	X	X	X		HLN6607_	Front Panel Assembly
X	X	X	X	X	X	X	X	X	X	X	X	X	X	X	X	D	TRN7391_	Audio Interface Board
								X	X	X	X	X	X	X	X	A	PLN1360_	Tone Remote Control Board
								X	X	X	X	X	X	X	X		HLN6396_	Control Head Board
								X	X	X	X	X	X	X	X		HLN6441_	Control Head Display
								X	X	X	X	X	X	X	X		HMN1050_	Desk Microphone
								X	X	X	X	X	X	X	X		TRN7392_	Control Head Bracket Hardware
								X	X	X	X	X	X	X	X		TRN7393_	Control Head Interface Board
								X	X	X	X	X	X	X	X		TRN7394_	Speaker Hardware
								X	X	X	X	X	X	X	X		HLN6523_	Control Head Button (Trunking Only)
								X	X	X	X	X	X	X	X		HLN6105_	Spare Button Kit
								X	X	X	X	X	X	X	X		HLN6688_	Spare Button Kit
X	X	X	X	X	X	X		X	X	X	X	X	X	X			HLN6418_	Transceiver Hardware
X	X	X	X	X	X	X	X										TGN6150_	Blank Control Head Panel
X	X	X	X	X	X	X	X										HLN6185_	Remote Control Head Hardware
X	X							X	X								HLN6060_	Radio Dash Hardware, Mid-Power
		X		X	X	X				X		X	X	X			HLN6073_	Radio Dash Hardware, Mid-Power, UHF
							X								X		HLN6126_	Radio Dash Hardware, Mid-Power TD
			X								X						HLN6127_	Radio Dash Hardware, Low-Power TD
X	X							X	X								HLD6022_	PA Board, 50W, VHF
		X								X							HLE6049_	PA Board, 40W, Range 1, UHF
			X								X						HLE6062_	PA Board, 25W, Range 2, UHF
				X	X							X	X				HLE6043_	PA Board, 40W, Range 3, UHF
						X								X			HLE6044_	PA Board, 40W, Range 4, UHF
							X								X		HLF6077_	PA Board, 35W, 800MHz
X	X							X	X								HRN6014_	ASTRO RF Board, VHF
		X		X	X	X				X		X	X	X			HRN6020_	ASTRO RF Board, UHF
			X								X						HRN4010_	RF Board, Low-Pass, UHF

Key: X = Item Included, D = Item Deleted, A = Item Added

(Model Chart continued on next page)

ASTRO Spectra Consolette Model Chart (continued)

MODEL OR OPTION NUMBER	DESCRIPTION
L04JKH9PW9_	20-25W 136-162MHZ W/Digital Rem Controller
L04KKH9PW9_	20-25W 146-174MHZ W/Digital Rem Controller
L04QKH9PW9_	20-40W 403-433MHZ W/Digital Rem Controller
L04RHH9PW9_	10-25W 438-470MHZ W/Digital Rem Controller
L04RKH9PW9_	20-40W 450-482MHZ W/Digital Rem Controller
L04RKH9PW9_SP01	10-25W 453-488MHZ W/Digital Rem Controller
L04SKH9PW9_	20-40W 482-512MHZ W/Digital Rem Controller
L04UJH9PW9_	35W 806-870MHZ W/Digital Rem Controller
L04JKH9PW7_	20-25W 136-162MHZ W/Local Control
L04KKH9PW7_	20-25W 146-174MHZ W/Local Control
L04QKH9PW7_	20-40W 403-433MHZ W/Local Control
L04RHH9PW7_	10-25W 438-470MHZ W/Local Control
L04RKH9PW7_	20-40W 450-482MHZ W/Local Control
L04RKH9PW7_SP01	10-25W 453-488MHZ W/Local Control
L04SKH9PW7_	20-40W 482-512MHZ W/Local Control
L04UJH9PW7_	35W 806-870MHZ W/Local Control

L04JKH9PW9_	L04KKH9PW9_	L04QKH9PW9_	L04RHH9PW9_	L04RKH9PW9_	L04RKH9PW9_SP01	L04SKH9PW9_	L04UJH9PW9_	L04JKH9PW7_	L04KKH9PW7_	L04QKH9PW7_	L04RHH9PW7_	L04RKH9PW7_	L04RKH9PW7_SP01	L04SKH9PW7_	L04UJH9PW7_	ITEM NUMBER	DESCRIPTION
							X								X	HRN6019_	ASTRO RF Board, 800MHz
X	X							X	X							HLD4342_	VCO Carrier Board, VHF
		X								X						HLE6045_	VCO Carrier Board, Range 1, UHF
			X								X					HLE6046_	VCO Carrier Board, Range 2, UHF
				X	X							X	X			HLE6000_	VCO Carrier Board, Range 3, UHF
						X								X		HLE6041_	VCO Carrier Board, Range 4, UHF
							X								X	HLF6080_	VCO Carrier Board, 800MHz
X								X								HLD6061_	Hybrid VCO Board, Range 1, VHF
	X								X							HLD6062_	Hybrid VCO Board, Range 2, VHF
		X								X						HLE6101_	Hybrid VCO Board, Range 1, UHF
			X								X					HLE6102_	Hybrid VCO Board, Range 2, UHF
				X	X							X	X			HLE6103_	Hybrid VCO Board, Range 3, UHF
						X								X		HLE6104_	Hybrid VCO Board, Range 4, UHF
							X								X	HLF6079_	Hybrid VCO Board, 800MHz
X								X								HRD6001_	Receiver Board, Front-End, Range 1, VHF
	X								X							HRD6002_	Receiver Board, Front-End, Range 2, VHF
		X								X						HRE6001_	Receiver Board, Front-End, Range 1, UHF
			X								X					HRE6002_	Receiver Board, Front-End, Range 2, UHF
				X	X							X	X			HRE6003_	Receiver Board, Front-End, Range 3, UHF
						X								X		HRE6004_	Receiver Board, Front-End, Range 4, UHF
							X								X	HRF6004_	Receiver Board, Front-End, 800MHz

Key: X = Item Included

ASTRO Spectra Plus Consolette Model Chart

MODEL OR OPTION NUMBER											DESCRIPTION
L04JKH9SW7_											25-50 W 136-162 MHz with Local Control
	L04KKH9SW7_										25-50 W 146-174 MHz with Local Control
		L04QKH9SW7_									20-40 W 403-433 MHz with Local Control
			L04RKH9SW7_								20-40 W 450-482 MHz with Local Control
				L04UJH9SW7_							35 W 806-869 MHz with Local Control
					L04KKH9SW9_						25-50 W 146-174 MHz with Digital Remote Controller
						L04QKH9SW9_					20-40 W 403-433 MHz with Digital Remote Controller
							L04RKH9SW9_				20-40 W 450-482 MHz with Digital Remote Controller
								L04UJH9SW9_			35 W 806-869 MHz with Digital Remote Controller
									L146		Tone Remote Control Option (All Local Control Models)
										ITEM NUMBER	**DESCRIPTION**
X	X	X	X	X	X	X	X	X		HPN4005_	Power Supply, 12 V, 12-Amp
X	X	X	X	X	X	X	X	X		FRN5358_	Fan
X	X	X	X	X	X	X	X	X		HLN5558_	Command Board
X	X	X	X	X	X	X	X	X		HLN6282_	Power Cord, 100 V
X	X	X	X	X	X	X	X	X		HLN6344_	Interconnect Board
X	X	X	X	X						HLN6396_	Control Head Board
X	X	X	X	X						HLN6441_	Control Head Display
X	X	X	X	X						HLN6801_	Hardware Consolette
X	X	X	X	X	X	X	X	X		HLN6837_	Vocoder Controller (VOCON) Board
X	X	X	X	X						HMN1050_	Desk Microphone
X	X	X	X	X	X	X	X	X		THN6676_	Housing Assembly
X	X	X	X	X	X	X	X	X		TKN8676_	Cable Kit
X	X	X	X	X	X	X	X	X	D	TRN7391_	Audio Interface Board (AIB)
X	X	X	X	X					A	PLN1360_	Tone Remote Control Board
X	X	X	X	X						TRN7392_	Control Head Bracket Hardware
X	X	X	X	X						TRN7393_	Control Head Interface Board
X	X	X	X	X						TRN7394_	Speaker Hardware
X	X	X	X	X	X	X	X	X		HLN6607_	Front Panel Assembly
X	X	X	X	X						HLN6688_	Spare Button Kit
X	X	X	X	X						HLN6105_	Spare Button Kit
					X	X	X	X		HLN6185_	Remote Control Head Hardware
					X	X	X	X		TGN6150_	Blank Control Head Panel
X	X				X					HLN6060_	Radio Dash Hardware, Mid-Power
		X	X			X	X			HLN6073_	Radio Dash Hardware, Mid-Power UHF
				X				X		HLN6126_	Radio Dash Hardware, Mid-Power TD
X	X				X					HLN6866_	Transceiver Hardware, VHF
		X	X			X	X			HLN6418_	Transceiver Hardware
				X				X		HLN6613_	Transceiver Hardware, 800
X	X				X					HLD6022_	PA Board, 50 W, VHF
		X				X				HLE6049_	PA Board, 40 W, Range 1, UHF
			X				X			HLE6043_	PA Board, 40 W, Range 3, UHF
				X				X		HLF6077_	Power Amplifier Board, 35 W, 800 MHz
X	X				X					HRN6014_	ASTRO RF Board, VHF
		X	X			X	X			HRN6020_	ASTRO RF Board, UHF
				X				X		HRN6019_	ASTRO RF Board, 800 MHz
X	X				X					HLD4342_	VCO Carrier Board, VHF
		X				X				HLE6045_	VCO Carrier Board, Range 1, UHF
			X				X			HLE6000_	VCO Carrier Board, Range 3, UHF
				X				X		HLF6080_	VCO Carrier Board, 800 MHz
X										HLD6061_	Hybrid VCO Board, Range 1, VHF
	X				X					HLD6062_	Hybrid VCO Board, Range 2, VHF
		X				X				HLE6101_	Hybrid VCO Board, Range 1, UHF
			X				X			HLE6103_	Hybrid VCO Board, Range 3, UHF
				X				X		HLF6079_	Hybrid VCO Board, 800 MHz
X										HRD6001_	Receiver Board, Front-End, Range 1, VHF
	X				X					HRD6002_	Receiver Board, Front-End, Range 2, VHF
		X				X				HRE6001_	Receiver Board, Front-End, Range 1, UHF
			X				X			HRE6003_	Receiver Board, Front-End, Range 3, UHF
				X				X		HRF6004_	Receiver Board, Front-End, 800 MHz

Key: X = Item Included, D = Item Deleted, A = Item Added

Specifications for ASTRO Spectra/Spectra Plus VHF Models

GENERAL	RECEIVER	TRANSMITTER
FCC Designation: AZ492FT3772 **Temperature Range:** –20°C to +50°C **Power Supply:** 115 VAC/230 VAC 12 Vdc **AC Current Drain:** (Maximum) **25-50 Watts Variable:** Receive: 0.7A/0.4A Transmit: 2.30A/1.16A **DC Current Drain:** (Maximum) **25-50 Watts Variable:** Receive: 3A Transmit: 13.5A **Dimensions (H x W x D):** 4.25" x 15.75"x 17" (108 mm x 400 mm x 432 mm) **Weight:** 16.1 lbs (7.3 kg)	**Frequency Range:** Range 1: 136-162 MHz Range 2: 146-174 MHz **Channel Spacing:** 12.5/25/30 kHz **Input Impedance:** 50 Ohms **Frequency Separation:** Full Bandsplit **Analog Sensitivity:+** **20 dB Quieting** (25/30 kHz Channel Spacing): With Optional Pre-Amp 0.25µV Without Optional Pre-Amp 0.40µV **12 dB Quieting** (25/30 kHz Channel Spacing): With Optional Pre-Amp 0.20µV Without Optional Pre-Amp 0.30µV **Digital Sensitivity:*** **1% BER** (12.5 kHz Channel Spacing): With Optional Pre-Amp 0.25µV Without Optional Pre-Amp 0.40µV **5% BER** (12.5 kHz Channel Spacing): With Optional Pre-Amp 0.20µV Without Optional Pre-Amp 0.30µV **Selectivity:+** 25/30 kHz Channel Spacing: –80 dB 12.5 kHz Channel Spacing: –70 dB **Intermodulation:+*** (25/30 kHz Channel Spacing) With Optional Pre-Amp –80 dB Without Optional Pre-Amp –85 dB **Spurious Rejection:+*** With Optional Pre-Amp –80 dB Without Optional Pre-Amp –83 dB **Audio Output at External Speaker:** (Local Control Only) 5W@<5% Distortion	**Frequency Range:** Range 1: 136-162 MHz Range 2: 146-174 MHz **Channel Spacing:** 12.5/25/30 kHz **Output Impedance:** 50 Ohms **Frequency Stability** **(–20 to +50°C; 25°C Ref.):** ± .00025% **Modulation Limiting:+** 25/30 kHz Channel Spacing: ±5.0 kHz 12.5 kHz Channel Spacing: ±2.5 kHz **Modulation Fidelity (C4FM):*** 12.5 kHz Channel Spacing: ±2.8 kHz **FM Hum and Noise:+** 25/30 kHz Channel Spacing: –50 dB 12.5 kHz Channel Spacing: –40 dB **Emissions:+*** **(Conducted and Radiated)** –70 dB **Audio Response:+** (6 dB/Octave Pre-Emphasis from 300 to 3000 Hz) +1, –3 dB **Audio Distortion:+** 2% **Emissions Designators:** 8K10F1E/F1D, 10K0F1D/F2D, 10K4F3E, 11K0F1D/F2D/F3E, 15K0F1D/F2D, 16K0F3E, and 20K0F1E/F1D
+ = Measured in Analog Mode per TIA/EIA-603 * = Measured in Digital Mode per TIA/EIA TSB102.CAAB		

Specifications subject to change without notice.

Specifications for ASTRO Spectra/Spectra Plus UHF Models

GENERAL	RECEIVER	TRANSMITTER
FCC Designation: AZ492FT4786 **Temperature Range:** –20°C to +50°C **Power Supply:** 115 VAC/230 VAC 12 Vdc **AC Current Drain:** (Maximum) **25-40 Watts Variable:** Receive: 0.7A/0.4A Transmit: 2.30A/1.16A **DC Current Drain:** (Maximum) **25-40 Watts Variable:** Receive: 3A Transmit: 13.5A **Dimensions (H x W x D):** 4.25" x 15.75"x 17" (108 mm x 400 mm x 432 mm) **Weight:** 16.1 lbs (7.3 kg)	**Frequency Range:** **Range 1:** 403-433 MHz **Range 2:** 438-470 MHz **Range 3:** 450-482 MHz **Range 4:** 482-512 MHz **Channel Spacing:** 12.5/25 kHz **Input Impedance:** 50 Ohms **Frequency Separation:** Full Bandsplit **Analog Sensitivity:+** **20 dB Quieting** (25 kHz Channel Spacing): With Optional Pre-Amp 0.25µV Without Optional Pre-Amp 0.40µV **12 dB Quieting** (25 kHz Channel Spacing): With Optional Pre-Amp 0.20µV Without Optional Pre-Amp 0.30µV **Digital Sensitivity:*** **1% BER** (12.5 kHz Channel Spacing): With Optional Pre-Amp 0.25µV Without Optional Pre-Amp 0.40µV **5% BER** (12.5 kHz Channel Spacing): With Optional Pre-Amp 0.20µV Without Optional Pre-Amp 0.30µV **Selectivity:+** 25 kHz Channel Spacing: –80 dB 12.5 kHz Channel Spacing: –75 dB **Intermodulation:+*** (25kHz Channel Spacing) With Optional Pre-Amp –80 dB Without Optional Pre-Amp –85 dB **Spurious Rejection:+*** With Optional Pre-Amp –80 dB Without Optional Pre-Amp –83 dB **Audio Output at External Speaker:** (Local Control Only) 5W@<5% Distortion	**Frequency Range:** **Range 1:** 403-433 MHz **Range 2:** 438-470 MHz **Range 3:** 450-482 MHz **Range 4:** 482-512 MHz **Channel Spacing:** 12.5/25 kHz **Output Impedance:** 50 Ohms **Frequency Stability** **(–20 to +50°C; 25°C Ref.):** ± .00020% **Modulation Limiting:+** 25 kHz Channel Spacing: ±5.0 kHz 12.5 kHz Channel Spacing: ±2.5 kHz **Modulation Fidelity (C4FM):*** 12.5 kHz Channel Spacing: ±2.8 kHz **FM Hum and Noise:+** 25 kHz Channel Spacing: –45 dB 12.5 kHz Channel Spacing: –40 dB **Emissions:+*** **(Conducted and Radiated)** –70 dB **Audio Response:+** (6 dB/Octave Pre-Emphasis from 300 to 3000 Hz) +1, –3 dB **Audio Distortion:+** 2% **Emissions Designators:** 8K10F1E/F1D, 10K0F1D/F2D, 10K4F3E, 11K0F1D/F2D/F3E, 15K0F1D/F2D, 16K0F3E, and 20K0F1E/F1D
+ = Measured in Analog Mode per TIA/EIA-603 * = Measured in Digital Mode per TIA/EIA TSB102.CAAB		

Specifications subject to change without notice.

Specifications for ASTRO Spectra/Spectra Plus 800MHz Models

GENERAL	RECEIVER	TRANSMITTER
FCC Designation: AZ492FT5751 **Temperature Range:** –20°C to +50°C **Power Supply:** 115 VAC/230 VAC 12 Vdc **AC Current Drain:** (Maximum) **35 Watts Variable:** Receive: 0.7A/0.4A Transmit: 2.30A/1.16A **DC Current Drain:** (Maximum) **35 Watts Variable:** Receive: 3A Transmit: 13.5A **Dimensions (H x W x D):** 4.25" x 15.75"x 17" (108 mm x 400 mm x 432 mm) **Weight:** 16.1 lbs (7.3 kg)	**Frequency Range:** 851–869 MHz **Channel Spacing:** 12.5/20/25 kHz **Input Impedance:** 50 Ohms **Frequency Separation:** Full Bandsplit **Analog Sensitivity:+** **20 dB Quieting** (25 kHz Channel Spacing): 0.30µV **12 dB Quieting** (25 kHz Channel Spacing): 0.25µV **Digital Sensitivity:*** **1% BER** (12.5 kHz Channel Spacing): 0.30µV **5% BER** (12.5 kHz Channel Spacing): 0.25µV **Selectivity:+** 25 kHz Channel Spacing: –80 dB 12.5 kHz Channel Spacing: –65 dB **Intermodulation:+** –80 dB **Spurious Rejection:+*** –83 dB **Audio Output at External Speaker:** (Local Control Only) 5W@<5% Distortion	**Frequency Range:** Repeater Mode: 806-824 MHz TalkAround Mode: 851-869 MHz **Channel Spacing:** 12.5/20/25 kHz **Output Impedance:** 50 Ohms **Frequency Stability** **(–20 to +50°C; 25°C Ref.):** ± .00015% **Modulation Limiting:+** 25 kHz Channel Spacing: ±5.0kHz 20 kHz Channel Spacing:±4kHz (NPSPCA) **Modulation Fidelity (C4FM):*** 12.5 kHz Channel Spacing: ±2.8 kHz **FM Hum and Noise:+** 25 kHz Channel Spacing: –40 dB **Emissions:+*** **(Conducted and Radiated)** –60 dB **Audio Response:+** (6 dB/Octave Pre-Emphasis from 300 to 3000 Hz) +1, –3 dB **Audio Distortion:+** 2% **Emissions Designators:** 8K10F1E/F1D, 10K0F1D/F2D, 10K4F3E, 11K0F1D/F2D/F3E, 15K0F1D/F2D, 16K0F3E, and 20K0F1E/F1D
+ = Measured in Analog Mode per TIA/EIA-603 * = Measured in Digital Mode per TIA/EIA TSB102.CAAB		

Specifications subject to change without notice.

ASTRO Spectra Consolette Options

Option	Description
Software Options	
G48	ENH: Consolette Conventional Operation
G50	ENH: Consolette SmartNET Operation
G51	ENH: Consolette SmartZone Operation
G101*	ENH: Stat-Alert Repeater Access
G114	ENH: Digital PTT-ID Console
G173	ENH: SmartZone OmniLink Multizone Operation
G241	ADD: Analog Only Mode
G242*	ADD: Digital and Analog Mode (VSELP)
G361	ENH: 9600 Baud Project 25 Trunking
G806	ENH: ASTRO Digital CAI Operation
Consolette Encryption Options	
G62*	ADD: DVP-XL & DES-XL Encryption
G159+	ADD: Encryption UCM Hardware
G275*	ADD: DES-OFB/DVP-XL Encryption
G298	ADD: Enhanced OTAR 3.0A
G625	ENH: DES/DES-XL/DES-OFB UCM
G843	ADD: AES Encryption UCM
G851	ADD: AES/DES-XL/DES-OFB Encryption
W797	ADD: DVP-XL Encryption
W969	ADD: Advanced SECURENET Multi-Key
General Hardware Options	
L32	12 Volts DC Only
L73	Omit Microphone—Only compatible with W7 Version
L114	Clock/VU Meter
L146	Tone Remote Control (TRC)—Only compatible with W7 version

* denotes that an option is for the ASTRO Spectra Plus Consolette only
+ denotes that an option is for the ASTRO Spectra Consolette only

Note: The ASTRO Spectra/Spectra Plus Consolette (W9 model) incorporates the Digital Remote Control feature. This model is compatible with DGT9000 models L1751 and L1752, RCH3000 models L3030 and CDN1337, and MC3000 model L3223.

Notes

Introduction

1

General

The information presented in this manual describes the installation, operation, and maintenance of the ASTRO™ Spectra®/Spectra Plus Consolette. Refer to the front of this manual for the model/option chart and performance specifications. For additional information about the ASTRO Spectra/Spectra Plus radio, refer to the appropriate ASTRO Spectra/Spectra Plus radio user's guide and service manual.

The ASTRO Spectra/Spectra Plus Consolette incorporates functional design in a modern, lightweight plastic housing. This housing was designed using "design-for-assembly" principles to minimize fasteners, part count, and assembly time, while improving versatility, assembly ease, and quality.

The Consolette consists of a base plate, onto which the entire Consolette is assembled. Subassemblies, which "snap-fit" into this base, include the fan, power supply, audio interface or optional tone remote control board, ASTRO Spectra/Spectra Plus radio, RF connector, and front panel assembly. The ASTRO Spectra/Spectra Plus radio, fan, and power supply also have screws that are used to secure them.

The front panel assembly consists of the ASTRO Spectra/Spectra Plus control head assembly, speaker, power-on LED, optional VU meter/clock, and optional keyloading connector. In addition, all internal cabling for the station is completely connectorized. To complete the assembly, the top cover snaps into the base plate. See "Diagrams and Parts Lists" on page 51 for the Consolette exploded view and detailed cable connectorization information.

The ASTRO Spectra/Spectra Plus Consolette allows conventional or trunked operation, analog or digital operation, SECURENET™ operation, local control, tone remote control, Digital Remote Control, and a variety of other options. The Microsoft Windows-based Customer Programming Software (CPS) allows for field programming for such items as channel frequencies, PL/DPL, etc.

The ASTRO Spectra/Spectra Plus Consolette supports all ASTRO mobile features except Siren, Vehicular Repeater System, and those requiring the addition of a direct-entry keyboard (DEK). Refer to the applicable ASTRO Spectra/Spectra Plus service manual for additional information about ASTRO features.

NOTE: While SCAN can be enabled on the ASTRO Spectra/Spectra Plus Consolette, it is advised that this feature not be used in conjunction with the Tone Remote Control option. This feature does not indicate to the remote user which channel the ASTRO transceiver may have scanned to, and thus might cause confusion.

Two DB-25 connectors, located on the back panel of the unit, provide connections for external equipment. The bottom connector (Accessory 2) provides an interface for tone remote and digital remote desksets.

Options

Hardware Options

12V DC Only, L32

This optional module replaces the AC power supply in sites where AC power is not available and allows the Consolette to operate with a 12V DC battery or generator.

Omit Microphone, L73

This option omits the desk microphone, which is part of the standard product. This option is incompatible with W9 versions (Digital Remote Control) of the ASTRO Spectra/Spectra Plus Consolette.

Clock/VU Meter, L114

This option provides a digital clock display with provisions for time setting, and a VU meter which provides indication of transmit audio level in the form of incremental bars.

Tone Remote Control, L146

This option provides tone remote control capability, as well as a digital interface to the Gold Series Elite Console. This option is incompatible with W9 versions (Digital Remote Control) of the ASTRO Spectra/Spectra Plus Consolette. See the note on page 1 concerning SCAN.

Software Options

Enhanced Digital PTT-ID Console, G114

This option provides display capability of Push-To-Talk, Private Call, Call Alert, and Emergency Call IDs. This information will either be displayed on the local control head (W7 models) or at the remote control head (W9 models). If the TRC option L146 is ordered in combination with the G114 option, then the ID will be made available to the console. The PTT-ID option is not automatically enabled in the ASTRO Spectra/Spectra Plus Consolette. To enable the G114 option, the ID Display field in the ASTRO Spectra/Spectra Plus Consolette codeplug will need to be enabled using ASTRO CPS. The ID Display field can be found in the *Radio Configuration –> Display & Menu* section of the ASTRO Spectra/Spectra Plus Consolette codeplug.

NOTE: The ASTRO Spectra/Spectra Plus Consolette uses an ASTRO Spectra/Spectra Plus Mobile subscriber radio as its transceiver. Therefore, the ASTRO Spectra/Spectra Plus Consolette will NOT decode an Emergency Alarm generated by field subscriber units, and it will NOT display the Emergency Alarm ID locally or at a console station. This signal is typically generated by the subscriber radio by pushing the orange alarm button.

Enhanced Stat-Alert Repeater Access, G101

This option allows the user to access a specific repeater for voice and data transmission. This option is NOT available on the ASTRO Spectra Plus Consolette.

Enhanced SmartZone Omnilink Multizone Operation, G173	This option is required for the 3600 SmartZone System.
Digital Remote Control, W9 Models	This option is standard with W9 ASTRO Spectra/Spectra Plus Consolette models. It allows operation with DGT9000 models L1751 and L1752, RCH3000 models L3030 and CDN1337, and MC3000 model L3223. This option is incompatible with L73, L114, and L146. **NOTE:** ASTRO Spectra/Spectra Plus Consolette mode names, phone lists, call lists, and message names are programmed in the radio using Customer Programming Software (CPS) for both W7 and W9 models.

Encryption Options

Encryption UCM Hardware, G159	This option provides the UCM hardware necessary for options G298, G843, and G851 in the ASTRO Spectra Plus Consolette.
OTAR 3.0A, G298	This option provides Over-the-Air Rekeying (OTAR) capability.
DVP-XL, W797	This option provides DVP-XL encryption/decryption capability. This option is incompatible with all other encryption options.
DVP-XL and DES-XL, G62	This option provides DVP-XL and DES-XL encryption/decryption capability. This option is incompatible with all other encryption options. This option is NOT available on the ASTRO Spectra Plus Consolette.
DES-OFB and DVP-XL, G275	This option provides DES-OFB and DVP-XL encryption/decryption capability. This option is incompatible with all other encryption options. This option is NOT available on the ASTRO Spectra Plus Consolette.
DES, DES-XL, and DES-OFB UCM, G625	This option provides DES, DES-XL, and DES-OFB encryption/decryption capability. This option is incompatible with all other encryption options.
AES, G843	This option provides AES encryption/decryption capability. This option is incompatible with all other encryption options.
AES, DES-XL and DES-OFB, G851	This option provides AES, DES-XL and DES-OFB encryption/decryption capability. This option is incompatible with all other encryption options.
Advanced SECURENET Multi-Key, W969	This option provides Advanced SECURENET Multi-Key and OTAR encryption/decryption capability. This option is incompatible with all other encryption options.

Notes

Installation

2

Planning the Installation

Since a good installation is important to obtain optimal performance of the Consolette, carefully plan the installation before the actual work is started. Location of the Consolette in relation to power, control lines, and antenna, as well as convenience and access for servicing, should be considered.

NOTE: The RF transmission line should be kept as short as possible to minimize line losses; however, the antenna should not be placed so close as to cause interference with the Consolette. See “Lightning and Surge Suppression” on page ix of this manual for additional antenna, RF transmission line, and control line installation considerations.

Read the entire procedure and the suggestions offered to help plan the installation. Make sure all necessary equipment and facilities are available during installation.

The ASTRO Spectra/Spectra Plus Consolette is not recommended for dense site applications (that is, dense metropolitan areas or “antenna farms”).

Ventilation

The Consolette is designed for wall mount or horizontal flat plane installation with forced convection cooling on both mountings. For proper cooling, the Consolette must be kept free of obstructions at its back and sides for at least 4 inches (100 mm), so as not to restrict airflow.

NOTE: Make certain that the air temperature around the unit does not exceed the recommended operating temperature range of –20°C to 50°C.

Station Mounting Procedures

Refer to the specifications section in the front of this manual for unit dimensions.

Desktop Installation

The Consolette may be placed on any solid, flat surface with easy access to the power source and RF transmission line. Keep in mind the ventilation requirements as previously described in “Ventilation” on page 5.

Wall Mounting

Ensure that the selected mounting surface is strong enough to support the Consolette weight of 16 lbs. Mark the location of the four mounting screws. See Figure 1 on page 6. Use screws suitable for the wall material. The maximum diameter of the screw and screw head should be 0.25 inches (6.5 mm) and 0.43 inches (11 mm), respectively. Allow the bottom surface of the screw head to protrude 0.3 inches (7.5 mm) from the wall surface. Hold the station with the

front panel facing up and guide the holes provided on the bottom of the cabinet over the mounting screws.

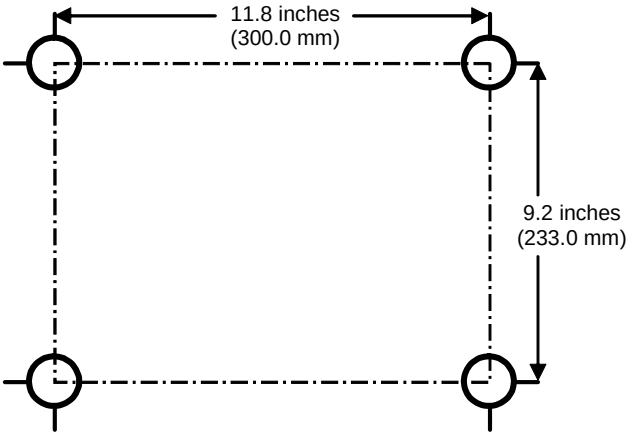

Figure 1. Wall Mounting

Antenna Connections

The antenna and transmission lines are not part of the Consolette; therefore, antenna installation instructions are not included in this section. Refer to the instructions shipped with the antenna for applicable information.

In its primary application, the Consolette is used for communication with mobile radios. Therefore, an omni-directional antenna is recommended. However, if the Consolette is located at the outer perimeter of a communications area, or if it is to be used for communication with a fixed station, an antenna with specific directional characteristics may be preferred. Local government agencies may also dictate the type of antenna to be used.

The coaxial antenna cable connects to an N-type coaxial connector located on the rear panel of the station. See Figure 2.

Figure 2. Rear Panel

Power and Ground Connection

General

All Consolettes should have a separate AC power circuit with proper current and voltage for Consolette operation. Refer to the specifications section in the front of this manual for AC requirements of each model. The power lines should be installed in accordance with local electrical codes. A substantial earth ground must be provided in a straight line close to the ground terminal provided on the Consolette. DO NOT consider an electrical output box as a substantial earth ground. See “Lightning and Surge Suppression” on page ix for additional grounding recommendations.

WARNING	**Even if a three-wire grounding AC power source is available, the radio equipment must be grounded separately to prevent electrical shock hazards and provide lightning protection.**

The AC power line leading to the selected site for the Consolette may be installed prior to installation of the Consolette itself.

AC Power Input

WARNING	**The Consolette is shipped standard from the factory for operation from a 115 VAC power source. For 230 VAC operation, remove the Consolette top cover (see “Disassembly and Reassembly” on page 38) and slide the AC power selector switch, located on the Consolette power supply, to the 230 VAC position. Install the appropriate AC power connector on the end of the 115 VAC power cord provided with the Consolette.**

Figure 3. Power Supply VAC-Select Switch

NOTE: Replacement 115 VAC power cords may be ordered from Motorola as kit number HLN6282A.

1. Install the Consolette as described in “Station Mounting Procedures” on page 5.
2. Connect the female plug of the AC line cord to the AC input power connector on the rear panel of the station. See Figure 2 on page 6.
3. Connect the ground terminal on the Consolette in as straight a line as possible to a substantial earth ground located as close as possible to the Consolette ground terminal.
4. Make certain the AC power source is of the proper current and voltage rating for the Consolette. Refer to the specifications section in the front of this manual for the AC requirement of each model. Then connect the male plug of the AC line cord to the AC power source.

   NOTE: The ON/OFF power button located on the ASTRO control head is disabled before shipment; therefore, the Consolette is immediately operational when its power cord is plugged into a live AC outlet. To enable the ON/OFF power button on the ASTRO control head, refer to the information in “DIP Switch and Jumper Settings” on page 8. Please note that the ON/OFF power button on the control head controls the power to the control head only. For Consolettes containing the Digital Remote Control feature, W9 models, no control head is present and the Consolette will always be immediately operational when its power cord is plugged into a live AC outlet.

DC Input Power (Optional)

Connection of DC input power to the Consolette is offered as an option. The battery should be connected to the DC connector (DC IN) on the rear panel of the Consolette. See Figure 2 on page 6. Note that the top and bottom pins of DC IN are the negative and positive terminals, respectively.

Caution	To prevent damage to the Consolette, be sure to use a battery that is connected only to the Consolette. Disconnect both battery terminals from the Consolette when connecting the battery to any other equipment, including a battery charger. Be sure to observe proper polarity when making the DC power connections.

DIP Switch and Jumper Settings

The DIP switches and jumpers are used to provide various operating configurations to the Consolette. The Audio Interface board has a DIP switch package and three jumpers. The optional Tone Remote Control board has two DIP switch packages, two jumpers, and two plugs. Refer to the tables below for detailed descriptions of switch and jumper settings for each board.

NOTE: 0Ω chip resistors are used for some jumpers. A low-power soldering iron must be used to install and remove them.

Caution	Review “Safe Handling of CMOS Integrated-Circuit Devices” on page xi before setting any DIP switches or jumpers.

Audio Interface Board Settings

Table 1. Audio Interface Board DIP Switch Settings

Switch	State	Description
S101-1	**ON**	ASTRO control head power button disabled
	OFF	ASTRO control head power button enabled
S101-2		Not used
S101-3	**ON**	EMER active high
	OFF	EMER active low
S101-4	**ON**	600Ω Impedance
	OFF	900Ω Impedance
S101-5	ON	900Ω Impedance
	OFF	600Ω Impedance
S101-6	ON	Local desk microphone not present
	OFF	Local desk microphone present
S101-7	ON	Digital Remote Control option present
	OFF	Digital Remote Control option not present
S101-8		Not used

***BOLD** indicates factory default setting*

Table 2. Audio Interface Board Jumper Settings

Jumper	State	Description
JU101	**IN**	Always placed for ASTRO
J14	A-B	Transmitted and received audio is routed to TAPE_OUT (Accessory Connector 3, pin 11)
	B-C	Only received audio is routed to TAPE_OUT (Accessory Connector 3, pin 11)
J15	A-B	SPKR_UNMUTE active high (COR)
	B-C	SPKR_UNMUTE active low (COR)

***BOLD** indicates factory default setting*

Tone Remote Control Board Settings

IMPORTANT!

Make sure you remove power to the Consolette when making changes to the DIP switch settings for S100. This DIP switch resides under the RFI shield on the Tone Remote Control board. The ASTRO mobile unit and the shield cover must be removed in order to access the DIP switch. After changes have been made, replace the shield cover, ASTRO mobile unit, and Consolette lid before restoring power to the Consolette.

Table 3. Tone Remote Control Board DIP Switch Settings (S100)

Switch	State	Description
S100-1	**OFF**	Always off for ASTRO
S100-2	ON	Local mic audio not routed down wireline
	OFF	Local mic audio routed down wireline
S100-3	**ON**	Tone Remote Control
	OFF	SMP Control
S100-4	ON	AGC Disabled
	OFF	AGC Enabled
S100-5	ON	Tone Table Select 1*
	OFF	
S100-6	ON	Tone Table Select 2*
	OFF	
S100-7	ON	Tone Table Select 3*
	OFF	
S100-8	ON	Tone Table Select 4.*
	OFF	

BOLD *indicates factory default setting*
** Refer to Table 7 for setting information*

Table 4. Tone Remote Control Board DIP Switch Settings (S101)

Switch	State	Description
S101-1	**ON**	ASTRO control head power button disabled
	OFF	ASTRO control head power button enabled
S101-2		Not used
S101-3	**ON**	EMER active high
	OFF	EMER active low
S101-4	**ON**	600Ω impedance
	OFF	900Ω impedance

Table 4. Tone Remote Control Board DIP Switch Settings (S101) (cont'd)

Switch	State	Description
S101-5	ON	900Ω impedance
	OFF	600Ω impedance
S101-6	ON	Local desk microphone not present
	OFF	Local desk microphone present
S101-7	**ON**	Two-wire operation
	OFF	Four-wire operation
S101-8	ON	Four-wire operation
	OFF	Two-wire operation

***BOLD** indicates factory default setting*

Table 5. Tone Remote Control Board Jumper Settings

Jumper	State	Description
JU100	**IN**	Crystal frequency shift circuit enabled
	OUT	Crystal frequency shift circuit disabled
JU101	**IN**	Always placed for ASTRO

***BOLD** indicates factory default setting*

Table 6. Tone Remote Control Board Plug Settings

Plug	Jumper	Description
P101	A-B	Transmitted and received audio is routed to TAPE_OUT (Accessory Connector 3, pin 11)
	B-C	Only received audio is routed to TAPE_OUT (Accessory Connector 3, pin 11)
P102	A-B	SPKR_UNMUTE active high
	B-C	SPKR_UNMUTE active low

***BOLD** indicates factory default setting*

Table 7. Tone Table Selection

SEL #4	SEL #3	SEL #2	SEL #1	Selected Tone Table
OFF	OFF	OFF	OFF	Standard
OFF	OFF	OFF	ON	CentraCom II
OFF	OFF	ON	OFF	No Mode Sel
OFF	OFF	ON	ON	Mode 1 only
OFF	ON	OFF	OFF	No Mode 1
OFF	ON	OFF	ON	Not supported
OFF	ON	ON	OFF	Not supported
OFF	ON	ON	ON	Not supported
ON	OFF	OFF	OFF	Not supported
ON	OFF	OFF	ON	Not supported
ON	OFF	ON	OFF	Not supported
ON	OFF	ON	ON	Not supported
ON	ON	OFF	OFF	Not supported
ON	ON	OFF	ON	Not supported
ON	ON	ON	OFF	Not supported
ON	ON	ON	ON	Not supported

Clock/VU Meter Setup (Optional)

General

The clock shows the time, day, month, and year.

Operation

Press the **mode** button to change the display cyclically between the time, month.day, and year.

Time Setting

After power up, the display flashes and the clock starts from the default time of: 00:00:00, month.day: 1.1, year: 1990.

1. Press the **mode** button until the time is displayed (HH:MM).
2. Press the **set** button for 5 seconds.
3. Press the **mode** button to reset the seconds. The display shows the seconds.
4. Press the **set** button. The display shows the hours and minutes (flashing).
5. Press the **mode** button until the correct minutes are displayed.
6. Press the **set** button. The display shows the hours (flashing) and minutes.
7. Press the **mode** button until the desired hour is displayed.

8. Press the **set** button to complete the time setting.

Month and Day Setting

1. Press the **mode** button until the month.day (MM.DD) is in the display.
2. Press the **set** button for 5 seconds (the day flashes).
3. Press the **mode** button until the desired day appears in the display.
4. Press the **set** button (the month flashes).
5. Press the **mode** button until the desired month is displayed.
6. Press the **set** button to complete the month and day setting.

Year Setting

1. Press the **mode** button until the year is in the display (1990 default).
2. Press the **set** button for 5 seconds (the right digit flashes).
3. Press the **mode** button until the correct digit flashes.
4. Press the **set** button (the next digit flashes).
5. Repeat the previous two steps to set all the digits.

The setting is complete. To display the time, press the **mode** button.

Accessory Connector 2

Table 8 contains pin descriptions for Accessory Connector 2. See Figure 4 on page 16 for pin locations on mating connector.

Caution	To avoid possible damage to external equipment and the Consolette, make sure equipment is connected to the proper accessory connector pins before applying power to the station.

Table 8. Accessory Connector 2 - Pin Descriptions

Pin	Signal Name	Description
1	RX+ (LINE1+)†	Receive high used with TRC desksets (TX and RX high for two-wire operation; RX high for four-wire operation)†
2	AUD_SHLD	Ground: audio or analog
3	TX+ (LINE2+)†	Transmit high used with all desksets (TX high for four-wire operation)†
4	FILT_AUD (DET_AUD)†	RX filtered audio (RX detect or discriminator audio)†
5	A+	+13.8VDC or battery voltage
6	BUSY	Busy line of data bus; 5V logic
7	BUS+	High side of bus data: 180° out of phase with BUS–; 5V logic
8	UNAVAILABLE	Not supported
9	VIP OUTPUT 1	Vehicle interface output port 1
10	PTT*	Push-To-Talk initiates a transmission; 5V logic
11	TX– (LINE2–)†	Transmit low use with all desksets (TX low for four-wire operation)†
12	DIG_GND	Ground for 5V logic signals
13	VIP INPUT 1	Vehicle interface input port 1
14	REMOTE_RX+ (SPKR_HI)†	Remote deskset speaker high output (**CAUTION: grounding this pin will result in damage to the radio**) (Speaker high output)†
15	REMOTE_RX– (SPKR_LO)†	Remote deskset speaker low output (**CAUTION: grounding this pin will result in damage to the radio**) (Speaker low output)†
16	RX– (LINE1–)†	Receive low used with TRC desksets (TX and RX low for two-wire operation, RX low for four-wire operation)†
17	TX_AUD (AUD_TX)†	Transmit audio used for telephone interconnect
18	VIP OUTPUT 3	Vehicle interface output port 3
19	BUS–	Low side of bus data: 180° out of phase with BUS–; 5V logic
20	RESET	Data bus reset line; 5V logic
21	5V	5V for logic circuits
22	VIP INPUT 3	Vehicle interface input port 3
23	VIP OUTPUT 2	Vehicle interface output port 2
24	MONITOR*	Allows activation of monitor (used with MRTI telephone interconnect)
25	SPKR_UNMUTE	Signal indicating if the Consolette is receiving valid audio

Notes: ** indicates an active-low condition*
† indicates TRC information
NC indicates Not Connected

Accessory Connector 3

Table 9 contains pin descriptions for Accessory Connector 3. See Figure 4 on page 16 for pin locations on mating connector.

Caution	To avoid possible damage to external equipment and the Consolette, make sure equipment is connected to the proper accessory connector pins before applying power to the station.

Table 9. Accessory Connector 3 - Pin Descriptions

Pin	Signal Name	Description
1	RS232_RXD (NC)†	RS232 receive data (pin not used on TRC)†
2	ANA_GND	Ground: audio or analog
3	AUX_RX_AUD	External SECURENET not supported by the Consolette
4	FILT_AUD (DET_AUD)†	RX filtered audio (RX detect or discriminator audio)†
5	A+	+13.8 Vdc or battery voltage
6	BUSY	Busy line of data bus; 5V logic
7	BUS+	High side of bus data: 180° out of phase with BUS–; 5V logic
8	BUS_SHLD	Ground for data bus; logic ground
9	VSENSE1 (RS232_RXD)†	External SECURENET not supported by the Consolette (RS232 receive data)
10	VSENSE1_SHLD	Ground for VSENSE; analog ground
11	TAPE_OUT	Tape recorder audio output
12	DIG_GND	Ground for 5V logic signals
13	EMER	Activates emergency MDC1200 transmission
14	RS232_TXD (NC)†	RS232 transmit data (pin not used on TRC)†
15	RS232_RTS (NC)†	RS232 request to send (pin not used on TRC)†
16	RS232_CTS (PS_AUD_OUT)†	RS232 clear to send (external SECURENET not supported by the Consolette)†
17	AUX_TX_AUD	External SECURENET not supported by the Consolette
18	SWB+	Switched +13.8 Vdc or battery voltage
19	BUS–	Low side of bus data: 180° out of phase with BUS–; 5V logic
20	RESET	Data bus reset line; 5V logic
21	NC	Currently not used
22	NC (RS232_TXD)†	Pin not used on AIB (RS232 Transmit data)†
23	VSENSE2 (RS232_RTS)†	External SECURENET not supported by the Consolette (RS232 request to send)†
24	VSENSE2_SHLD	Ground for VSENSE; analog ground
25	NC (RS232_CTS)†	Pin not used on AIB (RS232 clear to send)†

Notes: *† indicates TRC information*
NC indicates Not Connected

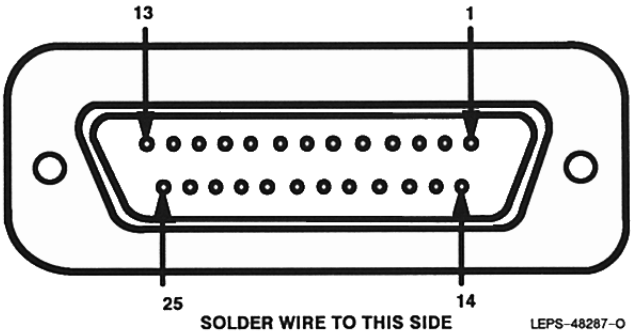

Figure 4. Accessory 2 and 3 Mating Connector

Remote Control Installation

Digital Remote Control Installation

This procedure is to be used for installation of the RCH3000 or MC3000 digital remote deskset. Make sure switches 1 and 7 of S101 on the audio interface board are in the ON position. Refer to the digital remote deskset manual for information regarding deskset operation. Table 10 lists the Accessory Connector 2 pins used for Digital Remote Control operation.

NOTES: All information, such as mode names, phone lists, call lists, and message names should be programmed in the ASTRO radio using Customer Programming Software (CPS).

External Alarms (Horn and Lights): The Consolette routes the VIP lines from the local control head in W7 models to the rear accessory connector of the Consolette for the External Alarm feature. Access to the VIP lines in W9 models is at the remote deskset. Consult the MC3000 manual for detailed information concerning configuration and support.

Table 10. Accessory Connector 2 Pins: Digital Remote Control Operation

Pin Number	Signal Name
2	AUD_SHLD
3	TX+
6	BUSY
7	BUS+
11	TX–
12	DIG_GND
14	REMOTE_RX+
15	REMOTE_RX–
19	BUS–
20	RESET

Tone Remote Control Installation

NOTE: The Tone Remote Control Option (L146) must be ordered for this option to be available.

Tone remote desksets are to be connected to Accessory Connector 2 on the rear panel of the Consolette. See Figure 2 on page 6. Two-wire or four-wire operation is available. Two-wire operation uses Line1+ and Line1- for both receive and transmit audio. Four-wire operation uses Line 1+ and Line1- for receive audio and Line2+ and Line2- for transmit audio. The default setting for wireline operation is two-wire. Impedance flexibility of 600Ω or 900Ω between Line1+ and Line 1- is also provided. The default setting for impedance is 600Ω. For information regarding changing wireline operation or impedance, refer to Table 3 on page 10 for S100 and Table 4 on page 10 for S101. Refer to the applicable tone remote deskset manual for information regarding deskset operation. Table 11 indicates the Accessory Connector 2 pins used for tone remote control operation.

Table 11. Accessory Connector 2 Pins: Tone Remote Control Operation

Pin Number	Signal Name
1	LINE1+
3	LINE2+
16	LINE1–
11	LINE2–

TRC Adjustment Procedure

Since the potentiometers are factory adjusted, the following information is for reference only.

Transmit

R529 is set fully clockwise, then turned counterclockwise one-half turn. This sets the AGC gain to somewhat less than maximum. If AGC is disabled with S100-4 set to the ON position, then R529 should be adjusted to obtain 0.7 VAC at TP1 when a 1 kHz audio signal is sent from the console.

A 120 mVrms, 1 kHz audio signal from a 600Ω source is applied to the Line 2+ and Line 2– input pins at Accessory Connector 2. The Consolette is placed in transmit and R569 is adjusted to obtain 3 kHz deviation.

Receive

While receiving a 1 kHz, 3 kHz deviation audio signal, R545 is adjusted for 0 dBm (775 mVrms) across a 600Ω load at Line1+ and Line1– output pins at Accessory Connector 2.

Notes

Theory of Operation

3

Introduction

This section explains the general operation of the ASTRO Spectra/Spectra Plus Consolette. For more detailed information about the ASTRO transceiver, refer to the applicable ASTRO Spectra/Spectra Plus operator's manual or service manual.

Provisions have been made for the connection of voice recorders to the ASTRO Spectra/Spectra Plus Consolette.

General

The ASTRO Spectra/Spectra Plus Consolette consists of three major building blocks: the ASTRO transceiver, the Audio Interface or optional Tone Remote Control board, and the power supply. The Audio Interface board is standard for the Consolette. The Tone Remote Control board replaces the Audio Interface board when the L146 option is added. All other blocks contained within the Consolette are served by the three major building blocks shown in bold (see Figure 5).

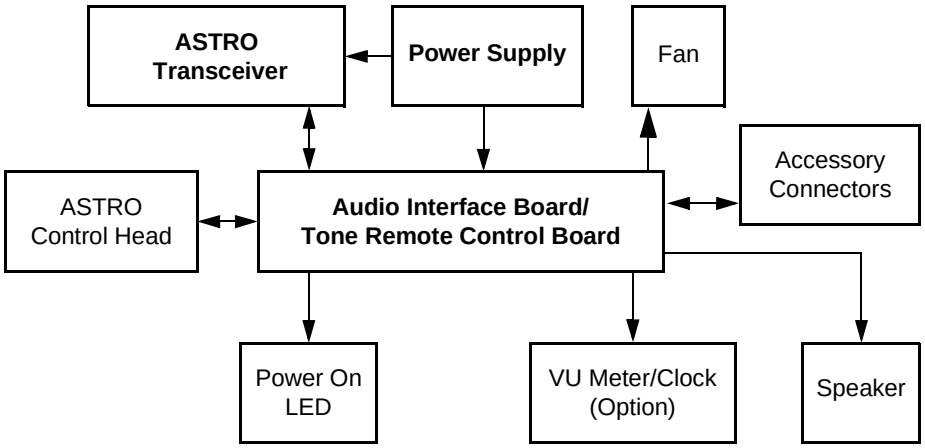

Figure 5. Consolette Block Diagram

Each major building block has its own unique function:

- Modulation, demodulation, and all other RF signal processing are performed by the ASTRO transceiver.
- All baseband signals being routed to and from the radio pass through the Audio Interface board or optional Tone Remote Control board. The board provides an interface for the ASTRO control head, speaker, accessory connectors, and other options.

- The power supply converts AC power into DC power for use by the radio's transceiver and the Audio Interface board or optional Tone Remote Control board.

The ASTRO Spectra/Spectra Plus control head and speaker are present in all W7 models. W9 Digital Remote Control models do not have a control head or speaker. Refer to the appropriate ASTRO Spectra/Spectra Plus radio user's guide for information regarding the operation of the control head.

The accessory connectors (see Figure 2 on page 6) are used to connect external equipment to the Consolette. Accessory Connector 3 (top) is currently used for tape recorder audio out. Tone remote desksets or digital remote desksets should use Accessory Connector 2 (bottom). Accessory Connector 1 (RJ45) is used to connect to a Gold Series Elite Console via the ACIM.

Caution	If any external equipment is inadvertently connected to the wrong accessory connector, damage to the equipment may result.

The optional VU meter/clock provides a transmit audio level indicator and a digital clock display. Power is provided to the VU meter/clock as soon as the Consolette is plugged into a live AC outlet.

A fan is provided with every Consolette. It circulates the air inside the Consolette to keep the internal ambient temperature at an acceptable level. It is important for the fan to be operating at all times to maintain proper Consolette operation. In addition, it is important to leave the top cover in place to maintain proper thermal conditions inside the Consolette.

The location of the control head, Power On LED, VU meter/clock, and speaker are indicated on the front panel of the station shown in Figure 6.

Figure 6. Consolette Front Panel - Model W7

Figure 7. Consolette Front Panel - Model W9

Audio Interface Board

General Description

The TRN7391C Audio Interface board (AIB) serves as the central interface for all internal and external components of the ASTRO Spectra/Spectra Plus Consolette. All signals are routed through the AIB where processing may occur. Most audio paths incorporate some processing, while most control and data signals are passed unaltered.

Multiple transmit and receive audio paths provide for numerous configurations of the ASTRO Spectra/Spectra Plus Consolette. All audio signals passing through the audio interface board are baseband signals in the range of 300-3000 Hz.

Most data and control signals are provided by 0-5V protected CMOS logic circuitry. PTT* and MONITOR* are provided for external control of transmit and receive functions. The ASTRO radio Vehicle Interface Ports (VIPS) are also available at Accessory Connector 2 (W7 models only).

Detailed Description

Receive Audio Paths

Two sources from the ASTRO radio are used for receive audio. Detect audio (DET_AUD) is located on J1 pin 17, and filtered audio (FILT_AUD) is located on J1 pins 11 and 36. Both DET_AUD and FILT_AUD are at a fixed level (approx. 300 mVrms); however, DET_AUD has a DC voltage level associated with it, while FILT_AUD has no DC voltage. FILT_AUD is also present at Accessory Connector 2 pin 4 and Accessory Connector 3 pin 4.

Detect audio (DET_AUD) passes to the Audio Interface board via J1 pin 17 at a level of 300 mVrms, relative to a 1.0 kHz tone at 60% FSD. It is then amplified by U102 pins 8, 9, and 10 and the level set by potentiometer R111. The level should be set to attain 1.0 Vrms between RX+ and RX– (Accessory Connector 2 pins 1 and 16, respectively). The audio then passes through an audio shaping filter (U102 pins 12, 13, and 14), which has unity gain for frequencies below 3000 Hz. The output of the audio shaping filter (U102 pin 14) is split into opposing phases by U102 pins 1, 2, 3, 5, 6, and 7 to provide a balanced output. Q103 and Q104 provide a final amplification stage. The impedance between RX+ and RX– can be set to 600Ω or 900Ω using S101-4 and 5. See Table 1 on page 9.

When the radio is in an idle state, the DET_AUD line of the ASTRO Digital transceiver is muted using the U107 op-amp circuit in combination with multiplexor U106. U107 compares the voltage level of the SPKR_HI line (U107 pin 3) to a fixed DC voltage level of 4V (U107 pin 2). When the mobile radio routes received audio to the speaker, the SPKR_HI line measures approximately 6 Vdc. This causes the output of U107 to activate transistor Q101 connected to control input A of the two-input multiplexor (U106 pin 11). When Q101 is active, U106 allows DET_AUD to be passed to the receive audio circuitry. When Q101 is inactive, the receive audio path is muted.

Receive audio is also routed from U106 gate 1 to buffer amplifier U101 op-amp 4 (MOB_RX). The output of this buffer drives the TAPE_OUT line at approximately 190 mVrms, which is used for external recording purposes.

Speaker audio is available at Accessory Connector 2, pins 14 and 15 (REMOTE_RX+ and REMOTE_RX–, respectively) for use with Digital Remote Control models. Speaker audio level is factory set but can be adjusted using Customer Programming Software. An array of resistors capable of dissipating 10 watts provides a 16Ω impedance for the desksets. To enable this audio output, S101-7 must be ON.

Caution	REMOTE_RX– (SPKR_LO) and REMOTE_RX+ (SPKR_HI) should never be grounded. If they are grounded, this will damage the radio.

Transmit Audio Paths

There are three main paths for transmit audio. All of these paths pass through transmit audio summing amplifiers (U101 pins 8, 9, and 10). The output of the summing amplifier (U101 pin 8) following AC-coupling capacitor C101 is fed into the ASTRO radio microphone input at J1 pin 23 and J1 pin 48. The level of this signal should be 90 mVrms relative to a 1.0 kHz tone at 60% FSD.

Local microphone audio passes through the control head to J2 pin 30. The microphone audio is biased and passed through the summing amplifier with unity gain. This path has an impedance of 600Ω.

A differential transmit path is available at Accessory Connector 2 pins 3 and 11 (TX+ and TX–, respectively) with an impedance of 1.0kΩ. This signal is combined at U101 pins 2 and 3 into a linear signal at U101 pin 1 and then routed through the transmit audio summing amplifier with a gain of +6 dB.

A linear transmit audio path is provided at Accessory Connector 2 pin 17 (TX_AUD). This transmit path has an impedance of 600Ω and unity gain through the transmit summing amplifier.

Transmit audio taken from the MIC_HI line is routed to the tape recorder output based on the jumper position at header J14. TX audio is routed to the tape recorder output at approximately 90 mVrms when the jumper is in the A-B position. If the jumper is moved to the B-C position, TX audio is not routed to the tape recorder output. (The TX and RX audio measurements were made relative to a 1 kHz tone at 60% FSD.)

Transmit audio is routed to the VU meter/clock (option L114) with a gain of +14dB.

Control and Data Paths

The Audio Interface board is transparent to all control and data lines except the data bus lines, MONITOR*, EMER (Emergency), and SPKR_UNMUTE. The amount of gain developed by U105 is determined by the current requirements of the remote desksets. Each op-amp on the BUS+, BUS-, and BUSY lines compares the voltage drop between the + and – inputs. The resulting amplified signal is further amplified by the transistor following each op-amp.

MONITOR* is presented to the radio with S101-6 OFF. See Table 1 on page 9. The monitor function is available at the control head.

EMER (Emergency) is available at Accessory Connector 3 pin 13. When triggered, the radio will broadcast an emergency signal (refer to the ASTRO

Spectra/Spectra Plus radio user's guide). S101-3 determines the method in which the emergency is triggered.

SPKR_UNMUTE is available at Accessory Connector 2 pin 25 as an output to provide an indication to accessories when the radio is receiving valid audio and the speaker is unmuted. This signal is configurable for either active-high or active-low operation using jumper J15. See Table 2 on page 9. When configured for active-high, the emitter of Q101 is used to determine the state of the speaker. (If the voltage of the emitter of Q101 is high, the speaker is unmuted; if the voltage here is low, the speaker is muted.) Similarly, if active-low is selected, the collector of Q102 is used to determine the state of the speaker. (If the voltage at the collector of Q102 is high, the speaker is muted; if the voltage here is low, the speaker is unmuted.) Typically, this signal is known as COR (Carrier-Operated Relay).

Tone Remote Control Board

NOTE: For the ASTRO Spectra/Spectra Plus Consolette to work properly with the Tone Remote Control (TRC) option, several codeplug parameters must be properly set using the ASTRO mobile CPS. The TRC option must be enabled, and "HUB defeats PL" must be selected. For instructions on setting these parameters, see the ASTRO mobile CPS manual.

General Description

Tone Remote Control (TRC) allows control of a Consolette from a remote location using a pair of wires (wireline) which need not have DC continuity. Control is accomplished using a tone remote control console that sends a sequence of control tones that are interpreted by the Consolette. A Consolette function normally corresponds to a function tone (FT) of a predefined frequency. All function tones must be preceded by a high-level guard tone (HLGT—usually 2175 Hz), which alerts the Consolette for a sequence of one or more function tones. On two-wire operation, receiver audio is muted when HLGT is detected, so there will be no interfering audio signals on the wireline when the function tones are being received. Upon receipt of the function tone(s), the appropriate functions (are) executed by the Consolette. An example might be the monitor function, which disables receiver PL; the monitor function tone frequency is usually designated 2050 Hz. See Table 12 on page 24 for function tone descriptions.

Receiver audio is gated through the radio and passed through a guard tone notch filter on the TRC board. This processed audio is then filtered and applied to the phone line. Transmit audio passes through a sample-and-hold AGC circuit, a guard tone notch filter, and then to the radio to transmit. Audio coming from the wireline is also passed through a bandpass filter that is centered at the guard tone frequency. This audio is then routed to the microprocessor (U123) to be decoded.

Figure 8 illustrates the sequence of tones involved in a line push-to-talk (LPTT) function. In such a case, the function tone must be defined as a transmit function on a certain mode (that is, 1950 Hz is usually defined as the function tone for keying on mode 1). If an LPTT function tone is sent, the remote control console follows the function tone with a continuous low-level guard tone (LLGT), which is at the same frequency as the HLGT, but at an amplitude 30 dB lower. LLGT is a pilot tone that is present, along with the transmitted audio, for the duration of the transmission. At the end of the transmission, the Consolette dekeys after the LLGT is no longer detected.

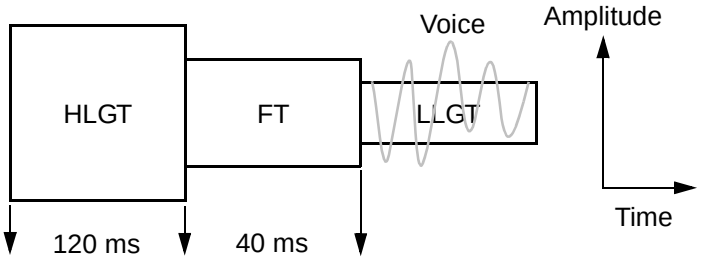

Figure 8. Remote Key-Up

Table 12. TRC Function Tone Descriptions

Function Tone	Tone Table Description				
	0000 - Standard Table	**0001 CentraCom II**	**0010 No Mode Select**	**0011 Mode 1 Only**	**0100 No Mode 1**
2175 Hz	Guard Tone/PTT	Guard Tone/PTT	Guard Tone/PTT	Guard Tone/PTT	Guard Tone/PTT
2050 Hz	Monitor	Monitor	Monitor	Monitor	Monitor
1950 Hz	Mode 1 Select	Mode 1 Select	No effect	Mode 1 Select	Mode 2 Select
1850 Hz	Mode 2 Select	Mode 2 Select	No effect	No effect	Mode 2 Select
1750 Hz	Mode 7 Select	Mode 7 Select	No effect	No effect	Mode 7 Select
1650 Hz	Mode 8 Select	Mode 8 Select	No effect	No effect	Mode 8 Select
1550 Hz	Mode 5 Select	Mode 5 Select	No effect	No effect	Mode 5 Select
1450 Hz	Mode 6 Select	Mode 6 Select	No effect	No effect	Mode 6 Select
1350 Hz	Mode 3 Select	Mode 3 Select	No effect	No effect	Mode 3 Select
1250 Hz	Mode 4 Select	Mode 4 Select	No effect	No effect	Mode 4 Select
1150 Hz	Secure Coded Select	Mode 5 Select	Secure Coded Select	Secure Coded Select	Secure Coded Select
1050 Hz	Secure Clear Select	Mode 6 Select	Secure Clear Select	Secure Clear Select	Secure Clear Select

0 indicates OFF state of S100 (8-5)
1 indicates ON state of S100 (8-5)
0101-1111 indicates same as Standard Table

During an LPTT function, the LLGT is removed from the transmitted audio path by a notch filter on the TRC board. This notch filter is tuned to the guard tone frequency (2175 Hz).

When not in the LPTT mode, the TRC board accepts receiver audio from the ASTRO radio, passes it through a notch filter (tuned to guard tone), and then through a line driver for transmission down the wireline to the remote console. The receive notch filter prevents false HLGT detection due to possible receiver audio components near the guard tone frequency (since on a two-wire board, receiver audio output and transmit audio/tone inputs are tied together at the wireline).

Detailed Description

Control Point Monitor

The ASTRO Spectra/Spectra Plus Consolette with the TRC option (L146) supports Control Point Monitor as defined by the FCC. The local Consolette speaker will unmute for remote audio that is being passed from the remote device to the Consolette to be transmitted. When the local microphone is keyed, the local speaker will be muted to voice audio. In addition, audio from the local microphone that is to be transmitted by the Consolette is routed, via the wireline interface, to the remote device. (This is not needed for FCC Control Point Monitor and can be disabled by S100-2.)

When the ASTRO Spectra/Spectra Plus Consolette with the TRC option is being used by both a local and a remote user at the same time, situations arise in which one user has priority over the other. The following cases describe the effect of dual interaction:

- If the remote user performs a push-to-talk (PTT) while the local user is already keyed, the remote user's audio will be transmitted with the encryption state that the local user has selected. This is only the case if the remote user requested a PTT on the same channel that was selected by the local user. If the remote user requested a PTT on a different channel than what was selected by the local user, the Consolette will dekey and a "bad" alert tone will be heard by both users until both PTTs are released.
- If the remote user attempts to change channels while the local user is keyed, the Consolette will dekey and a "bad" alert tone will be heard until the local user releases the PTT.
- All attempts by the remote user to change the state of encryption are ignored if the local user is already keyed.
- If the local user performs a PTT while the remote user is already keyed, the local user's audio will be transmitted on the channel that the remote user has selected with the encryption state that the remote user has selected.
- If the local user attempts to either change channels or the state of encryption while the remote user is keyed, the Consolette will dekey and a "bad" alert tone will be heard until the remote user releases the PTT.

Receive Audio Path

Audio from the receiver, as well as the various tones produced from the mobile (that is, keyfail tones and button-press "beeps"), are gated through the ASTRO transceiver and sent to the TRC board via a ribbon cable that plugs into J1 pin 42 (DET_AUD). Audio coming from the transceiver should measure approximately 300 mVrms.

DET_AUD from the ASTRO transceiver is always passed through U116 gate 2 (S100-1 is always OFF for the Consolette). Audio at U116 pin 14 should measure approximately 90 Vrms. Receive audio then passes through the muting gate (U116 gate 1), controlled by RX_MUTE. Receive audio muting is controlled by the microprocessor (U123 pin 36), which toggles the RX_MUTE output line. When HLGT is detected or an LPTT is in progress, the receiver audio will be muted. This gate is also muted for a local PTT in order to block ASTRO noise at the DET_AUD line from entering the wireline.

The audio is passed through buffer amplifier U105 op amp 3 and then notched at the guard tone frequency (2175 Hz) by hybrid HY2 filter 1. This hybrid

contains an MF10 dual switched capacitor filter and a dual op-amp for summing purposes. The notch filter is formed by summing together the high-pass and low-pass outputs of the filter IC. The MF10s on both HY1 and HY2 require a high-frequency clock input that is derived from a divider circuit (U127 and U129) and the MPU “E” clock. The output of the clock divider circuit (FILTER CLK) is a 110.4 kHz square wave that is used by the MF10s to create the filters. The purpose of the notch filter is to notch out the guard tone frequency area of the voice spectrum prior to transmission across the wireline.

The receive notch filter has a gain of 0 dB at 1 kHz. At the 2175 Hz notch frequency the response is -35 dB, relative to 1 kHz. To allow the slight drifting of the guard tone frequency due to wireline translation, the filter must guarantee 30 dB of attenuation at ±5 Hz from the center frequency. The filter has a “Q” of 3.8 in order to remove all voice components in the guard tone frequency range before reaching the wireline. Without this protection, false guard tone detects by the TRC board would be inevitable, since the audio leaving the TRC board is up to 20 dB higher than that arriving to make up for wireline attenuation.

The output of the notch filter passes through another muting gate (U114 gate 2). This audio path is always closed when the Consolette is receiving. Local microphone audio and trunking tones also share this audio path to the console. During local PTT this gate can be used to mute local audio on the receive path (see “Transmit Audio Path” on page 26).

Receive audio is also routed from U116 gate 1 to buffer amplifier U106 op amp 4 (MOB_RX). The output of this buffer drives the TAPE OUT line, which is used for external recording purposes.

The line-adjust circuit (U111 op amp 3 and R545) allows the notched audio level to be adjusted via R545. By varying R545, you can adjust the audio level to the line. This allows you to compensate for line losses to obtain the desired audio levels. The adjusted audio is then sent through an audio-shaping filter (U111 op amp 4). This filter is a unity-gain, low-pass filter with a corner frequency of 3 kHz.

The output of the line audio-shaping filter is split into opposing phases in the line driver circuit (U111 op amps 1 and 2, Q114 and Q115), where the receiver audio is applied to the line transformer and the phone line. With two-wire selected, the line driver audio is also applied to the input of the transmit audio/tones detection path through T100-6. A portion of the line driver audio is also fed into the input amplifier of the transmit audio/tone detection path, via U111 op amp 2 and S101-7,8; this audio is approximately 180° out of phase with the received audio at T100. This is done in order to, at least partially, cancel the receive audio so that a tone from a control console may be more easily detected in the presence of receiver audio. With four-wire selected, this cancellation is not necessary and S101-7 should be open and S101-8 should be closed.

Transmit Audio Path

Wireline audio originating from a console to be transmitted over the air is applied to the wireline interface network. The wireline interface network consists of T100 (two-wire operation), T1610 (four-wire operation), U110, and other discrete components. The purpose of this circuitry is to match the impedance of the TRC board to that of the wireline (T100, T1610, S101), block any DC components between the TRC board and the wireline (C502, C501), and provide protection from surges on the line (E1, E2).

The input from the phone line is applied to U112 op amp 1 pin 2, along with the line driver audio-canceling voltage (described previously) via S101-7 and S101-8. The gain of U112 op amp 1 is controlled by FET transistor Q113. The lower the DC gate voltage on Q113, the higher the gain, since a more negative gate voltage tends to turn off the FET, creating maximum feedback resistance across pins 1 and 2 of U112 op amp 1. The AGC potentiometer (R529) sets the maximum gain point of the AGC. Normally, the potentiometer setting allows input signals as low as –35 dBm to achieve full deviation. After the AGC circuit, the audio is amplified by a factor of 20 (U112 op amp 4) and is sent to the transmit guard-tone notch filter (HY2 filter 2).

The transmit guard-tone notch filter is formed by summing the two outputs of the hybrid in the same manner as the receive notch filter previously discussed. This filter notches out the guard-tone frequency area of the voice spectrum before sending the audio to the radio to be transmitted. The notch filter's high “Q” of 5.8 ensures removal of the guard-tone frequency component without affecting the adjacent voice energy in the audio signal being transmitted.

The filtered audio level is adjusted by potentiometer R569 to set the transmitted deviation. The audio is routed through buffer amplifier U105 op amp 4 and then (via TX_AUDIO) into amplifier U110 op amp 1, after which it is sent to the ASTRO transceiver to be transmitted. The audio is also passed to buffer amplifier U106 op amp 2. The output of this buffer drives the TAPE OUT line, which is used for external recording purposes.

The filtered audio is also passed to amplifier U106 op amp 1, whose gain is set by digital potentiometer U107. The audio is passed to the AUX_RX_AUD input of the radio, where it is then output to the local speaker.

Audio tones associated with trunking operation are generated locally on the TRC board. They originate from the microprocessor (U132 pin 38) and are filtered by low-pass filter U106 op amp 3. The filtered tones are then sent to buffer amplifier U105 op amp 3 to be sent down the wireline to the remote speaker.

Local microphone audio (MIC_AUDIO) is passed to buffer amplifier U105 op amp 2. It is then sent down the wireline allowing local transmit audio to be monitored at the remote unit. If it is desired to prevent local audio (audio not received by the radio) from being routed to the remote speaker via the wireline, place S100-2 to the ON position. This will cause microprocessor U123 pin 35 (WL MUTE) to be asserted, opening the wireline path at U114 gate 2 for local microphone audio, local trunking tones, and locally generated beeps. Local microphone audio is also passed through buffer amplifier U105 op amp 1 to TX_AUDIO to the transmitter

Tone Processing Section

Inputs to this section originate from TP1 (the output of U112 op amp 4) in the wireline transmit audio path. When looking for guard tone (standby operation), the audio is selected by U114 gate 1 to be routed through the guard tone bandpass filter and then sent to the filter/limiter. After high-level guard tone (HLGT) has been detected, U114 gate 1 is toggled to allow audio to bypass the bandpass filter. This permits unfiltered audio to be decoded and allows for proper identification of the function tones.

The limiter consists of a gain stage (U112 op amp 3), which also provides some broadband filtering, followed by a limiter stage that converts the signal to a square wave. The output of U112 op amp 2 drives transistor Q116. This transistor provides an input to the microprocessor's Input Capture (U123

pin 41). The input to this pin is a 0-5V peak-to-peak square wave. The frequency of the square wave depends on the particular guard/function tone being sent. The microprocessor determines which tone is being sent and then takes the corresponding actions.

AGC Circuit Operation

The output of U112 op amp 4 feeds reference comparators (U117 op amps 2, 3, and 4) of the AGC circuit. If the peak voltage at the input exceeds the threshold of U117 op amp 4 (+5.8V) in the positive direction, the output of U117 op amp 4 pulses high, causing current to pass through R510 and charge C506 via D1012. Similarly, if the peak minimum voltage at the input dips below the threshold of U117 op amp 3 (+3.6V), U117 op amp 3 will allow a pulse of current to pass through R509 to charge C506 via D1013. As C506 charges, the DC voltage on the gate of Q113 rises. This rise in gate voltage on Q113 will reduce the drain-source resistance and hence the gain of U112 op amp 1. This in turn will reduce the output of the AGC circuit. This output is again used to feed the comparators, and the process continues until the voltage is just equal to the threshold of U117 op amp 4 minus the threshold of U117 op amp 3, or 2.2V peak-to-peak.

The “sample-and-hold” action of the AGC occurs when a new HLGT is received. Upon detection of HLGT by the microprocessor (U123 pin 41), the AGC_RESET* line (which has been low when no LPTT was present) and the TONE detect line will go high (approximately 5V). This action will cause the gain of Q113 to rapidly increase (C503 is placed parallel with the smaller C506, reducing the gate voltage on Q113), and also turns Q110 off to allow a higher gain in the U112 op amp 1 stage. This action will momentarily cause a rise in the AC voltage level on TP1 above the usual compression point of 0 dBm. During the time that the peak voltage on TP1 is more than 0.7V higher than the 1.1V peak (0 dBm) threshold, comparator U112 op amp 2 and Q116 are actuated to provide faster than normal attack (gain reduction) time. In this manner, the gain is always reset to maximum at the beginning of a new line push-to-talk, and then is reduced as required until the HLGT is at 0 dBm (which is the AGC compression point) as measured on TP1. This ensures full deviation, regardless of the amplitude of any audio signal on the line just prior to the line push-to-talk.

During an LPTT function, the Auto Level Control (ALC) action of the AGC causes the gain to freeze for the duration of LLGT. This will preserve the natural characteristics of the speech without producing any pumping effects.

In extreme cases where the audio signal received at the Consolette is unusually low (due to very long lines or other attenuating factors), the AGC action of the TRC board may be inhibited, yielding slightly more gain. Switch S100-4, when set to the ON position, will disable the AGC circuitry. Absolute gain and transmit deviation is then adjustable by potentiometers R529 and R569, respectively. This option is NOT recommended because the Low-Level Guard Tone (LLGT) may already be too low to be detected and thus the Consolette will not transmit.

Power Distribution

A+ is routed to the TRC board from the power supply through J11. This connection provides ignition sense to the control head and the mobile. When S101-1 is in the ON position, A+ is immediately sourced from the power supply to the SWB+ connections of the mobile, control head, and TRC board. When S101-1 is in the OFF position, the user must enable power at the front of the control head. SWB+ is then sourced from the control head to the mobile and to the TRC board.

On the TRC board, A+ is converted to regulated 9.6V through U100. From this 9.6V source, several comparator voltages are produced. SWB+ is routed to a 5V regulator (U132) on the TRC board, which provides regulated 5V to all of the logic ICs.

One exception to the IC power distribution is the Serial I/O IC (U131). This IC needs to be powered at all times, regardless of the state of S101-1. A+ is routed to U131, as well as a continuous 5V source from the regulated 9.6V source.

Input/Output Control Definitions

AGC_INHIBIT*—This signal is generated by the microprocessor (U123) through the latch (U124 pin 14). It is used to disable the AGC circuit of the TRC.

TONE_DETECT—This signal is generated by the microprocessor (U123) through the latch (U124 pin 12). It is toggled from low(0V) to high(5V) when a guard/function tone is successfully detected. This line provides a discharge path between C503 and C506, which varies the gain of the AGC circuit.

LPTT*—This signal is generated by the microprocessor (U123) through the latch (U124 pin 19). It is high during an LPTT to provide additional gain for LLGT. This additional gain improves the accuracy of the tone decoding process.

GT/FT*—This signal is generated by the microprocessor (U123) through the latch (U124 pin 17). During the detection of guard tone, the bandpass filter is switched into the path of the audio. This allows isolation of the 2175 Hz signal and provides more accurate decoding. Once the guard tone has been detected, the signal line goes low. This switches the bandpass filter out of the path to allow the function tone(s) to pass to the limiter/decoder undisturbed.

RX_MUTE—This signal is generated by the microprocessor (U123 pin 36). It is used to mute receiver audio (DET_AUD) when an HLGT has been detected or an LPTT is in progress. DET_AUD is also muted during a local PTT to block ASTRO noise from entering the wireline.

WL_MUTE—This signal is generated by the microprocessor (U123 pin 35). It is used to mute the wireline during a remote PTT, and when S100-2 is in the ON position (mute local audio and local trunking tones).

AGC_RESET*—This signal is generated by the microprocessor (U123) through the latch (U124 pin 16). It is used to provide an additional discharge path for C503 and C506 (changing the feedback path of U112A in the AGC circuit). Upon detection of HLGT by the microprocessor, the AGC_RESET line will go high. AGC_RESET will go low at the end of LPTT.

SPKR_UNMUTE—This signal is available at Accessory Connector 2 pin 25 as an output to provide an indication to accessories when the radio is receiving valid audio and the speaker is unmuted. This signal is configurable for either active high or active low operation using Plug P102. See Table 6 on page 11. When configured for active high, the emitter of Q117 is used to determine the state of the speaker. (If the voltage at Q117's emitter is low, the speaker is muted, and if the voltage here is high, the speaker is unmuted.) Similarly, if active low configuration is selected, the collector of Q118 is used to determine the state of the speaker. (If the voltage at Q118's collector is low, the speaker is unmuted, and if the voltage here is high, the speaker is muted.)

Smart Modem Protocol (SMP) Control

The ASTRO Tone Remote Control Board also provides an RS232 port through which the Consolette communicates with an ASTRO Console Interface Module (ACIM) using the Smart Modem Protocol (SMP).

NOTE: For correct operation, the ACIM must be connected to a Gold Series Console programmed with System 3.0 Conventional or later.

Depending on the setting of S100-3, the operation of the Tone Remote Control board can vary as follows:

S100 Pin 3 ON—Tone Remote Control

In this setup, the Consolette can only be controlled remotely by a tone remote deskset, via the wireline, as described in “General Description” on page 23 under “Tone Remote Control Board.” The Consolette will report both PTT-IDs and Call Alert IDs, when applicable, to Accessory Connector 1 (J13). See Table 13. For a list of supported IDs, see Table 14 on page 31.

Table 13. Accessory Connector 1 (J13)

J13 Pin Number	Signal
1	N/C
2	N/C
3	N/C
4	ACIM_TXD
5	N/C
6	ACIM_RXD
7	N/C
8	GND

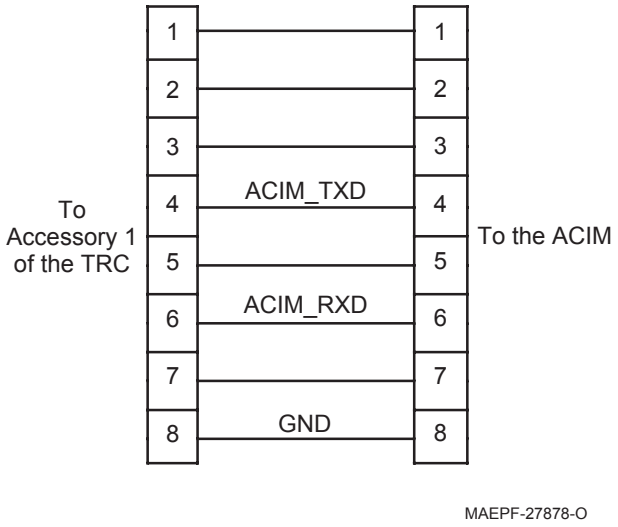

Figure 9. TRC to ACIM Cable Diagram

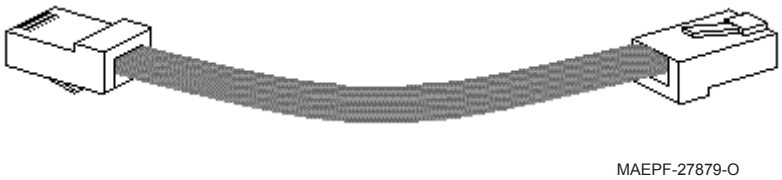

Figure 10. TRC to ACIM Cable Orientation (not provided by Motorola)

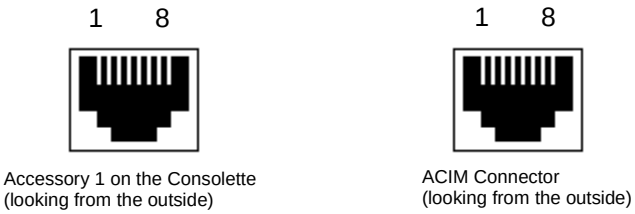

Table 14. Supported IDs

	Call Alert	PTT-ID	Emergency Call PTT-ID	Emergency Alarm PTT-ID
Analog Conventional	Not Reported	Not Reported	Not Reported	Not Reported
Analog Trunked	Reported	Not Reported	Not Reported	Not Reported
APCO Conventional	Reported	Reported	Reported	Not Reported
APCO Trunked (3600 & 9600)	Reported	Reported	Reported	Not Reported

S100-3 OFF—SMP Control

In this setup, the Consolette can only be controlled remotely by the Gold Series Console via Accessory Connector 1 (J13). The Consolette will report both PTT-IDs and Call Alert IDs, when applicable, to Accessory Connector 1. See Table 13 on page 30. For a list of supported IDs, see Table 14 on page 31.

As with Tone Remote Control, the Gold Series Console (using Smart Modem Protocol) can command the Consolette to do the following:

- Change modes (the number depends on console support)
- Enable/disable encryption
- Enable/disable monitor
- PTT with positive mode

Audio routing to and from the Consolette continues to pass down the wireline. See “Receive Audio Path” on page 25 and “Transmit Audio Path” on page 26 for audio routing details.

Caution	Do not connect anything to Accessory Connector 1 other than the supported ACIM connection. Damage could occur to the Consolette and unsupported external devices.

Power-Up

The ON/OFF power button located on the ASTRO Spectra/Spectra Plus control head is disabled before shipment. Therefore, the station is immediately operational when its power cord is plugged into a live AC outlet. To enable the ON/OFF power button on the control head, refer to the information in “DIP Switch and Jumper Settings” on page 8 of this manual. Please note that the ON/OFF power button on the control head controls the power to the control head only. For W9 model Consolettes (Digital Remote Control), no control head is present and the station will become immediately operational when its power cord is plugged into a live AC outlet.

Once the station is powered, the Power On LED should light up, and the station should be ready to receive or transmit.

Receive

Since there can be various configurations of the Consolette depending upon the user's requirements, no detailed receive operating instructions will be given in this section. However, detailed operating instructions can be found in the ASTRO Spectra/Spectra Plus radio user’s guide. For information regarding remote control deskset operation, refer to the applicable instruction manual.

Transmit

Since there can be various configurations of the Consolette depending upon the user's requirements, no detailed transmit operating instructions will be given in this section. However, detailed operating instructions can be found in the ASTRO Spectra/Spectra Plus radio user’s guide. For information regarding the operation of the digital remote deskset, refer to the applicable instruction manual.

NOTE: Each Consolette is shipped with the Emergency (Emer) button disabled. Use the current version of the ASTRO CPS to enable the Emergency button, if desired.

Power-Up Self-Check Errors

Each time the radio is turned on, the MCU and DSP perform some internal diagnostics. These diagnostics consist of checking the programmable devices such as the FLASH ROMs, internal and external EEPROMs, SRAM devices, and ADSIC configuration bus checksum. At the end of the power-up self-check routines, if an error exists, the appropriate error code is shown on the display. Self-test errors are classified as either “fatal” or “non-fatal.” Fatal errors will inhibit user operation; non-fatal errors will not. For non-display radios, the error codes may be read using the Customer Programming Software (CPS) from the universal connector at the rear of the ASTRO Spectra or Spectra Plus Transceiver.

Table 15. ASTRO Spectra Consolette Power-Up Self-Check Error Codes

Error Code	Description	Troubleshooting Chart
01/02	External EEPROM checksum non-fatal error	See Note 1
01/81	ROM checksum failure	See Note 1
01/82	External EEPROM checksum failure	See Note 1
01/84	EEPROM is blank	See Note 1
01/88	RAM failure —**Note:** Not a checksum failure	See Note 1
01/90	General hardware failure	See Note 1
01/92	Internal EEPROM checksum failure	See Note 1
02/81	DSP ROM checksum failure	See Note 1
02/82	DSP RAM 1 failure	See Note 1
02/84	DSP RAM 2 failure	See Note 1
02/88	DSP RAM failure —**Note:** Not a checksum failure	See Note 1
02/90	General DSP hardware failure (DSP start-up message not received correctly)	See Note 1
02/A0	ADSIC checksum failure	See Note 1
09/10	Secure option not communicating with radio	See Note 1
09/90	Secure hardware failure	See Note 1
1C/10	TRC option not communicating with radio	See Note 2
1C/81	TRC ROM checksum failure	See Note 3
1C/82	TRC configuration register corrupted	See Note 3
1C/88	TRC RAM failure —**Note:** Not a checksum failure	See Note 3

Table 16. ASTRO Spectra Plus Consolette Power-Up Self-Check Error Codes

Error Code	Description	Troubleshooting Chart
01/02	FLASH ROM Codeplug Checksum Non-Fatal Error	See Note 1
01/12	Security Partition Checksum Non-Fatal Error	See Note 1
01/20	ABACUS Tune Failure Non-Fatal Error	See Note 1
01/22	Tuning Codeplug Checksum Non-Fatal Error	See Note 1
01/81	Host ROM Checksum Fatal Error	See Note 1
01/82	FLASH ROM codeplug Checksum Fatal Error	See Note 1
01/88	External RAM Fatal Error —**Note:** Not a checksum error	See Note 1
01/90	General Hardware Failure Fatal Error	See Note 1
01/92	Security Partition Checksum Fatal Error	See Note 1
01/93	FLASHport Authentication Code Failure	See Note 1
01/98	Internal RAM Fail Fatal Error	See Note 1
01/A2	Tuning Codeplug Checksum Fatal Error	See Note 1
02/81	DSP ROM Checksum Fatal Error	See Note 1
02/88	DSP RAM Fatal Error —**Note:** Not a checksum failure	See Note 1
02/90	General DSP hardware failure (DSP start-up message not received correctly)	See Note 1
09/10	Secure option not communicating with radio	See Note 1
09/90	Secure hardware failure	See Note 1
1C/10	TRC option not communicating with radio	See Note 2
1C/81	TRC ROM checksum failure	See Note 3
1C/82	TRC configuration register corrupted	See Note 3
1C/88	TRC RAM failure—**Note:** Not a checksum failure	See Note 3

In the case of multiple errors, the codes are logically OR'd and the results displayed. As an example, in the case of an ADSIC checksum failure and a DSP ROM checksum failure, the resultant code would be 02/A1.

NOTES:

1. Refer to the ASTRO Spectra Plus Detailed Service Manual, Motorola Publication 68P81076C25-D, for troubleshooting charts and information.
2. Refer to the "Consolette Does Not Work Troubleshooting Chart" on page 53 in this manual.
3. For hardware failure with the TRC option, please contact an authorized service shop for repair.

Maintenance

4

Alignment

The advanced design and manufacturing techniques eliminate the need for traditional tuning tasks for the ASTRO Spectra/Spectra Plus transceiver. All circuits in the transceiver have been aligned at the factory with specialized equipment. Alignment in the field should not be necessary or attempted.

Programming

Codeplug Programming

Configuration items for field programming of the ASTRO Spectra/Spectra Plus Consolette are shown in Table 16 on page 34. It is important to note that the field programming setup connects directly to the ASTRO transceiver and not to the accessory connectors on the rear panel of the Consolette. Therefore, the first step in programming the codeplug of the Consolette is to remove the top cover. See “Disassembly and Reassembly” on page 38 for cover removal and replacement instructions. Once the top cover has been removed, the ASTRO Spectra/Spectra Plus transceiver can be connected to a PC.

There are two different methods by which the ASTRO transceivers are connected to the PC, based on whether it is an ASTRO Spectra or ASTRO Spectra Plus model. The ASTRO Spectra transceiver is connected to the PC using a Smart Radio Interface Box (RLN1015). The Smart Radio Interface Box is connected to the 15-pin accessory connector on the rear of the ASTRO Spectra transceiver via the ASTRO Spectra Interface cable (30-80369B73), and to the PC via an IBM PC-AT Computer Interface Cable (30-80369B72). See Figure 11 on page 36. The ASTRO Spectra Plus transceiver is connected directly to the PC using the HKN6155 Programming/Flash cable connected to the microphone connector on the front panel of the transceiver. See Figure 12 on page 36. Prior to programming, make certain that external equipment is disconnected from the accessory connectors on the rear of the Consolette.

FLASHport Programming

Always be sure you are ordering/using the latest version of the software package. If you are not sure, contact Motorola Product Services or United States and Canada Aftermarket Products Division at 1-800-422-4210.

In order to FLASH the internally housed ASTRO mobile, the lid must be removed from the Consolette. Connect the ASTRO mobile programming cable (HKN6155_) to the microphone connector on the front panel of the ASTRO mobile and follow the FLASHport instructions.

Table 17. Field Programming items

Item	Kit/Part No.	Description
1	RVN4183_	ASTRO Spectra Customer Programming Software (CPS)
	RVN4185_	ASTRO Spectra Plus Customer Programming Software (CPS)
2	30-80369B72	IBM PC-AT Computer Interface Cable
3	30-80369B73	ASTRO Spectra Interface Cable
4	RLN1015_	Smart Radio Interface Box (SRIB)
5	01-80302E27	SRIB Power Pack (110 VAC)
6	HKN6155_	ASTRO Spectra Plus Programming/Flash Cable

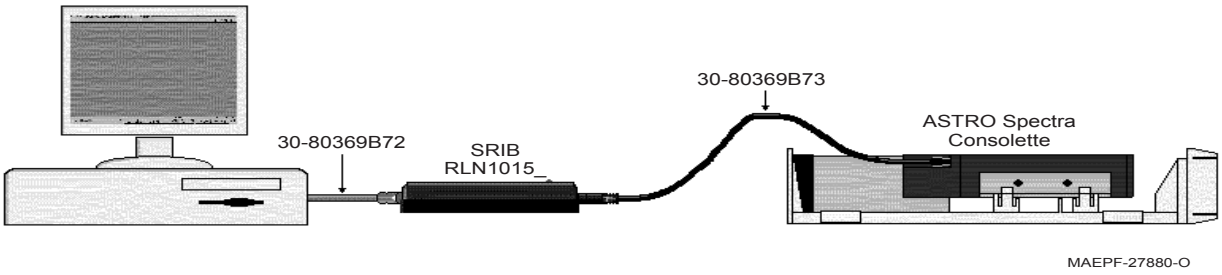

Figure 11. ASTRO Spectra Programming Hardware Configuration

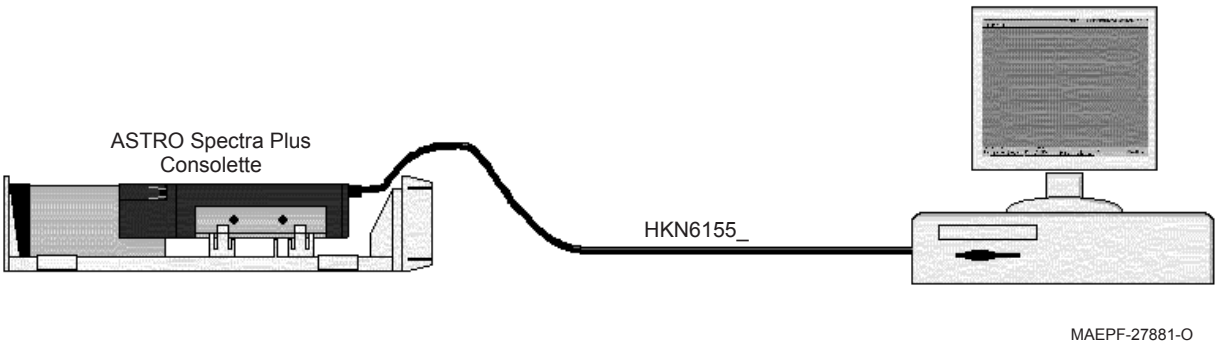

Figure 12. ASTRO Spectra Plus Programming Hardware Configuration

Maintenance and Troubleshooting Procedures

Depending upon the environment in which the ASTRO Consolette operates, a service schedule should be created to periodically clean out the inside of the Consolette. This will ensure proper air flow within the station at all times.

“Diagrams and Parts Lists” on page 51 provides a listing of Troubleshooting Charts and Schematics, Boards, and Parts Lists. These diagrams contain detailed cable connectorization information for each cable in the ASTRO Spectra/Spectra Plus Consolette. These diagrams should be used in conjunction with the applicable ASTRO Spectra/Spectra Plus Mobile Service Manual to efficiently service the Consolette.

The troubleshooting charts assist you in tracing a problem to its source. Start with the “Consolette Does Not Work Troubleshooting Chart” on page 53 and you will be directed to the source of the problem. Use other troubleshooting charts and the applicable ASTRO Spectra/Spectra Plus Service Manual to further identify the source of the problem.

Recommended Test Equipment and Service Aids

Electrical

- R2001 Communications System Analyzer or R2600 Service Monitor (or equivalent)
- R1037 or R1024 Digital Multimeter (or equivalent)
- HP8903 Audio Analyzer (or equivalent)
- HP3552 Transmission Test Set (or equivalent)
- 13.8Vdc, 15A Power Supply (for DC-only operation)
- Radio Service Cable (Motorola PN 3084565T01)
- ASTRO Spectra/Spectra Plus Basic Service Manual (Motorola PN 68P81076C20)
- ASTRO Spectra/Spectra Plus Detailed Service Manual (Motorola PN 68P81076C25)
- Current ASTRO Mobile Customer Programming Software

Mechanical

- T10, T15, and T25 Torx™ Drivers
- Straight Blade and Phillips Screwdrivers
- Tuning Tool (Motorola PN 66-84974L01)
- 3/16-inch (4.7625 mm) and 11/32-inch (8.73125 mm) Hex Nut Drivers/ Wrenches
- Needle-nose Pliers
- 3/32-inch (2.38125 mm) Allen Wrench

Disassembly and Reassembly

Caution	Make sure to remove power to and disconnect all accessories from the Consolette when performing any of the following Disassembly and Reassembly instructions.

The following is a list of detailed instructions on how to remove and replace the main components of the Consolette. All of the retainer snaps surrounding the individual components must be released for removal.

Caution	Never attempt to lift the station by the front panel after the top cover is removed as damage may occur to the connected cables. Also, never attempt to disconnect any cable by pulling on the wires; disconnect by connectors only.

Top Cover

Removing the Top Cover

1. Raise the two latches on the rear of the Consolette upwards.
2. Simultaneously lower both latches all the way down. When both latches are lowered, the top cover will automatically spring toward the rear of the Consolette.
3. Pull the top cover towards the rear of the Consolette to further separate it from the front panel.
4. Lift the top cover straight up to remove.

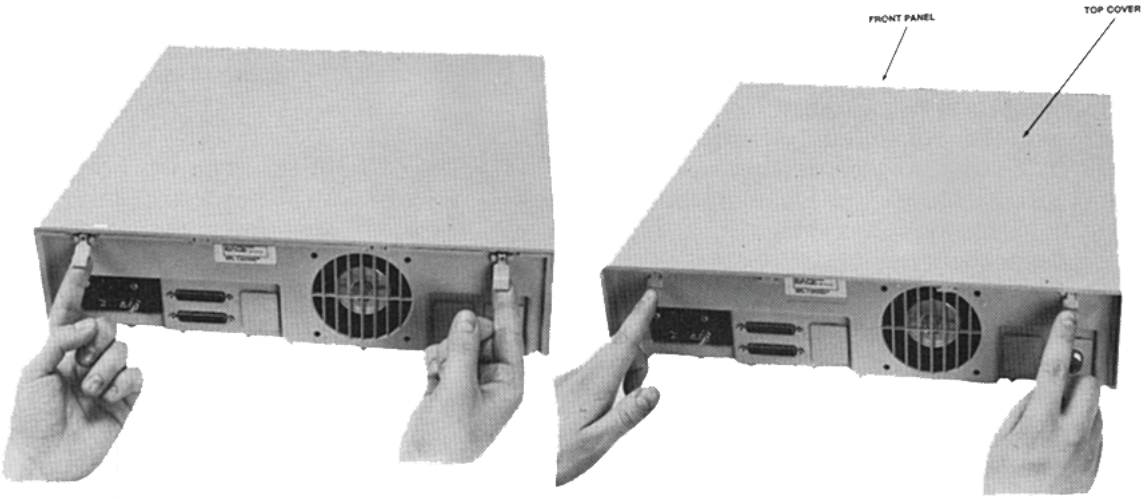

Figure 13. Removing the Top Cover

NOTE: The rear view of the Consolette shown in Figure 13 might be of an earlier model.

Replacing the Top Cover

1. Lower the top cover straight down onto the base, making certain that the four side tabs on the cover (two on each side) align with, and set into, the corresponding grooves in the base.
2. From the rear of the unit, push the top cover forward to close. It may be necessary to use a soft mallet to tap the top cover forward so that it locks into place securely.

NOTE: It is assumed from this point on that all disassembly and reassembly procedures begin with the top cover removed and end with the top cover being replaced.

ASTRO Transceiver

Removing the Transceiver

Begin removal of the transceiver by placing the Consolette on a solid surface with the front of the unit facing you.

1. Disconnect the DC power cable from the rear of the ASTRO Transceiver.
2. Disconnect the coaxial cable from the antenna port at the rear of the ASTRO Transceiver.
3. Remove the screw holding the transceiver in place. This screw is located on the left side of the transceiver in-between the two "retainer snaps."
4. Pull out on the two retainer snaps on the left side of the ASTRO Transceiver to release it.
5. Tilt the ASTRO Transceiver to the right (lift from the left side) to release it from the retaining bosses on the right side of the ASTRO Transceiver.
6. Disconnect the interface cable from connectors J5 and J6 on the front of the ASTRO Transceiver. These connectors are held in place by four screws (two per connector).
7. Disconnect the Keyload Cable from the front panel of the transceiver, if present.

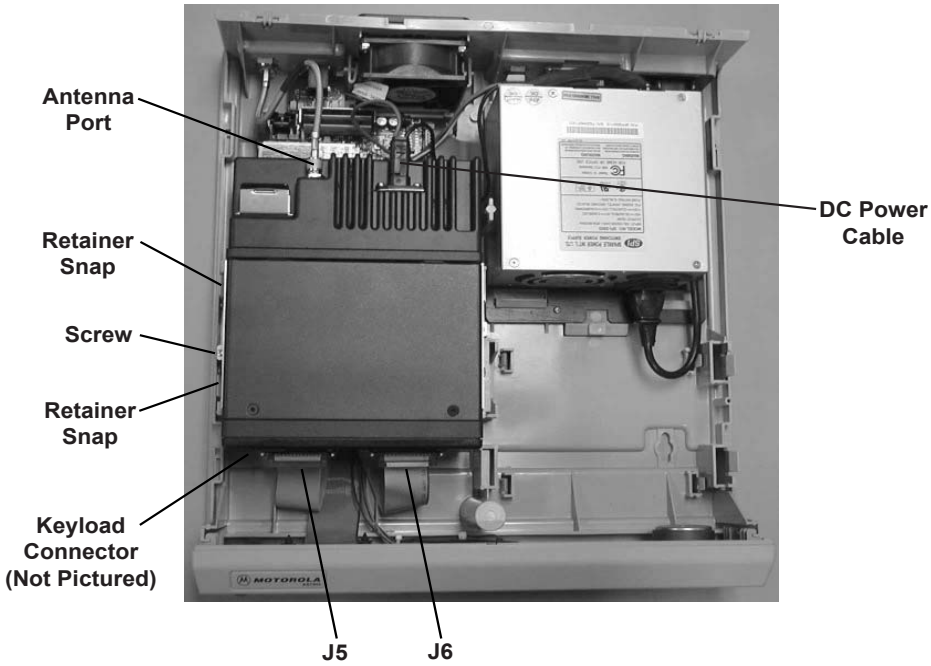

Figure 14. Removing the Transceiver

Replacing the Transceiver

1. Connect the interface cable to the connectors J5 and J6 on the front of the ASTRO Transceiver. Be sure to tighten the four screws (two per connector) so that the connectors do not inadvertently come loose.
2. Connect the Keyload cable to the microphone connector on the front panel of the ASTRO Transceiver, if the cable is present.
3. Insert the right side of the transceiver at a 45-degree angle so the bracket on the radio hooks under the retaining bosses in the center of the Consolette housing.
4. Lower the left side of the transceiver into the snap retainers on the left side of the Consolette housing, making sure that both retainers snap into place, locking the transceiver down.
5. Insert the screw between the two retainer snaps.
6. Connect the coaxial cable to the antenna port at the rear of the ASTRO Transceiver. (Make sure the connector is tightened down to where no threads are exposed. If threads are exposed, then the connector is not seated properly.)
7. Connect the DC power cable to the DC plug on the rear of the ASTRO Transceiver.

AIB/TRC Interface Board

NOTE: Follow the instructions for removing the ASTRO Transceiver prior to attempting to remove or replace the AIB/TRC interface board.

Removing the AIB/TRC Board

The AIB/TRC board is located underneath the ASTRO transceiver. You must, therefore, remove the transceiver before removing the interface board.

1. Disconnect the accessory cable from connector J3 of the AIB/TRC board.
2. Disconnect the transceiver cable from connector J1 of the AIB/TRC board.
3. Disconnect the power cable from connector J11 of the AIB/TRC board.
4. Disconnect the power LED cable from connector J5 of the AIB/TRC board.
5. Disconnect the fan cable from connector J8 (AIB) or J13 (TRC).
6. Disconnect the control head cable TRN7393 from connector J2 of the AIB/TRC board. (This cable is present only on the Local Control (W7) Consolettes.)
7. Disconnect the speaker cable from connector J4 of the AIB/TRC board. (This cable is present only on the Local Control (W7) Consolettes.)
8. Disconnect the cables for the battery revert and clock VU meter from J7 and J6 of the AIB/TRC board, respectively, if those options are present.

   NOTE: The emergency battery revert option is no longer supported by Rev C and higher versions of the AIB and TRC boards

9. With everything disconnected from the AIB/TRC board, the board can be removed by releasing the three retainer snaps on either side of the board (six total). It is easier if you start from the front of the unit and work to the back when releasing the retainers.
10. The AIB/TRC board should now be free from the Consolette housing.

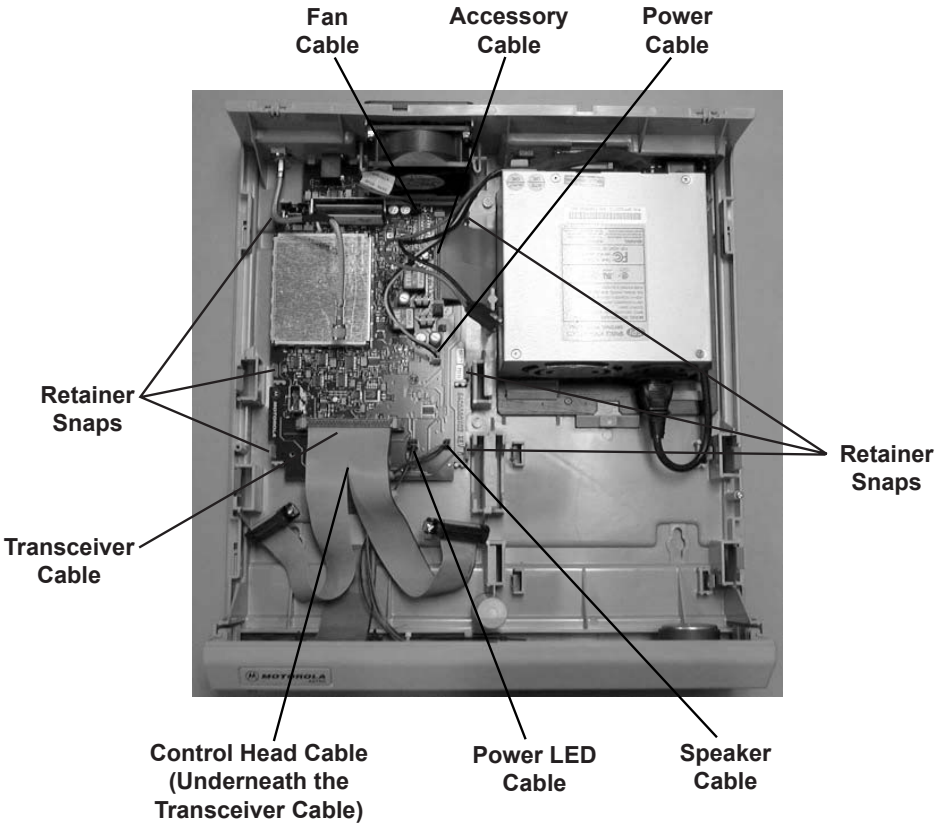

Figure 15. Removing the AIB/TRC Board

Replacing the AIB/TRC Board

1. Insert the AIB/TRC board into the Consolette housing and snap it into place. When inserting the TRC into the Consolette housing, make sure that the board is secured by the two retainers to the right and left of the opening for Accessory Connector 1.
2. Connect the accessory cable to connector J3 on the AIB/TRC board.
3. Connect the transceiver cable to connector J1 on the AIB/TRC board.
4. Connect the power cable to connector J11 on the AIB/TRC board.
5. Connect the power LED cable to connector J5 on the AIB/TRC board.
6. Connect the fan cable to connector J8 (AIB) or J13 (TRC).
7. Connect the control head cable TRN7393 to connector J2 on the AIB/TRC board. (This cable is only present on the Local Control (W7) Consolettes.)
8. Connect the speaker cable to connector J4 on the AIB/TRC board. (This cable is only present on the Local Control (W7) Consolettes.)
9. Connect the cable for the Clock/VU meter to J6 on the AIB/TRC board, if the option is present.

   NOTE: The emergency battery revert option is no longer supported by Rev C and higher versions of the AIB and TRC boards.

10. Perform the steps for replacing the ASTRO Transceiver (see “Replacing the Transceiver” on page 40).

Power Supply

Removing the Power Supply

1. Make sure that the AC power cord is disconnected from the Consolette and that the ground connection has been removed.
2. Remove the screw located to the left of the power supply retainer snap.
3. Disconnect the DC power cable from the rear of the ASTRO transceiver.
4. Disconnect the power cable from connector J11 on the AIB/TRC board. (It may be necessary to remove the ASTRO Transceiver in order to access connector J11.)
5. Push down on the power supply retainer snap to release the power supply.
6. Slide the power supply toward the front of the Consolette to free the power supply from the Consolette housing.
7. Lift the power supply out of the Consolette housing.

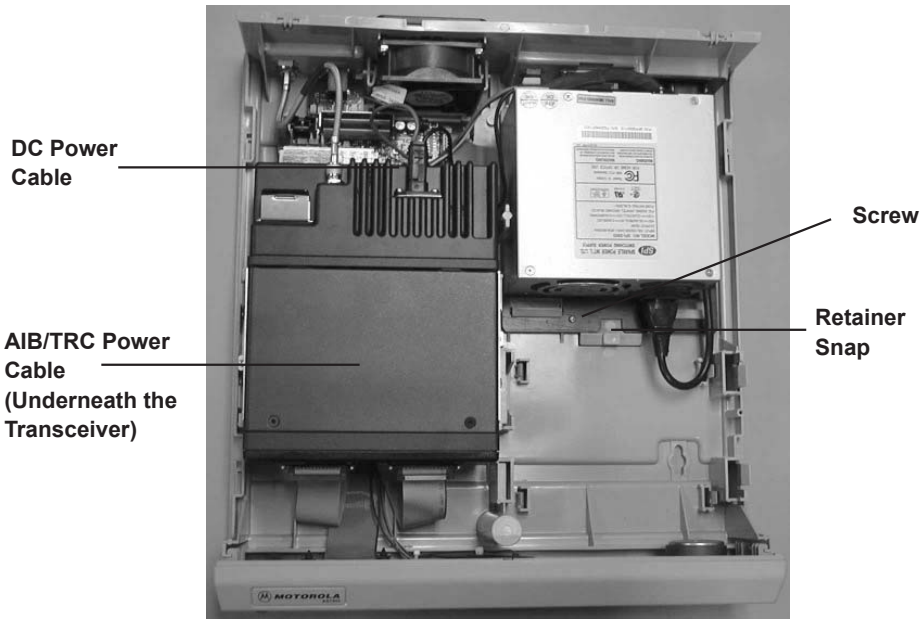

Figure 16. Removing the Power Supply

Replacing the Power Supply

1. Set the new power supply into the Consolette housing in the right rear corner.
2. Align the slits in the base of the power supply with the retainers on the Consolette housing so that the retainers come through the base of the power supply.
3. Slide the power supply to the rear of the Consolette. The retainer snap should engage and lock the power supply into place.
4. Connect the power cable to connector J11 on the AIB/TRC board.
5. Connect the DC power cable to the DC connector on the rear of the ASTRO transceiver.
6. Insert the screw in the hole to the left of the retainer snap.
7. Make sure to reconnect the ground wire to the power supply before plugging the power supply back in to an AC outlet.

Fan

Removing the Fan

1. Make sure that the AC power cord is disconnected from the Consolette.
2. Disconnect the fan power leads from either connector J8 (AIB) or J13 (TRC). (If this is an older model Consolette, the fan may be plugged directly into the power supply.)
3. Remove the dust filter cover from its mounting bracket by releasing the four snap retainers holding it in place. This will expose the four Phillips screws holding the fan in place.
4. Remove the four Phillips screws and lock nuts that secure the fan to the rear of the Consolette housing. (There are openings in the bottom of the Consolette housing that will allow access to the two lock nuts on the bottom of the fan.) This will release the dust filter mounting bracket from the rear of the Consolette.
5. Release the two retainer snaps, one on each side, and tilt the top of the fan towards the front of the Consolette housing. This should release the fan from the retaining boss in the bottom of the Consolette housing.
6. Lift the fan out of the Consolette housing.

Replacing the Fan

1. Insert the fan at the rear of the Consolette housing at an angle.
2. Tilt the fan to the rear of the Consolette housing, making sure that the lower lip of the fan locks underneath the retaining boss in the bottom of the Consolette housing and the retainer snaps lock into place.
3. Insert the four phillips screws through the dust filter mounting bracket, the Consolette housing, and the fan assembly and secure them in place with the four lock nuts. (The bottom two screws can be accessed through two holes in the bottom of the Consolette housing to tighten down the lock nuts.)
4. Replace the dust filter cover onto the mounting bracket.

Control Head (W7 Models Only)

Removing the Control Head

1. Make sure the AC power cord is disconnected from the Consolette.
2. Remove the two control head mounting screws located on either side of the control head.
3. Push the control head from the rear to free it from the front panel.
4. Disconnect the TRN7393 control head interface kit from the rear of the control head.

Replacing the Control Head

1. Connect the TRN7393 control head interface kit to the connector on the rear of the control head.
2. Push the control head into the front panel.
3. Insert the two control head mounting screws, one on either side of the control head.

Caution	When servicing control heads, it is recommended that all water seals (O-ring, keypads, etc.) that are disturbed in the procedure be replaced to ensure radio sealing integrity.

NOTE: Care must be taken to shield the control head (front and back) from a direct exposure to pressurized water. The pressurized water from a hose is, in most cases, more severe than the stated tests, conditions, and typical environments.

Cable Diagrams

5

Standard Cables

Table 18. Power LED Cable Part #3084459T01 (P/O TKN8676)

Pin Number		Signal
Power LED	**J5**	
1	1	POWER_LED_A
2	2	POWER_LED_K
	3	N/C

Table 19. RF Coaxial Cable Part #0112004E09 (P/O TKN8676)

Pin Number		Signal
1 RX	**Radio**	
1	1	RF
2	2	ANA_GND

Table 20. Speaker Cable Part #3084457T01 (P/O TRN7394)

Pin Number		Signal
Speaker	**J4**	
1	1	SPKR_HI
2	2	SPKR_LO

Table 21. Control Head Cable

Pin Number		Signal
Control Head	**J2**	
1	1	VSENSE1 (N/C)†
2	2	N/C
3	3	N/C
4	4	VSENSE2 (N/C)†
5	5	ANA_GND (DIG_GND)†
6	6	N/C
7	7	N/C
8	8	ANA_GND (DIG_GND)†
9	9	BUS+
10	10	BUS-
11	11	A+
12	12	SWB+
13	13	BUSY
14	14	SWB+
15	15	IGN
16	16	RESET
17	17	VO3
18	18	VI3
19	19	HUB* (N/C)†
20	20	VI1
21	21	VO1
22	22	VO2
23	23	N/C
24	24	N/C
25	25	N/C (RESET/PTT*)†
26	26	MIC_LO
27	27	N/C
28	28	HUB
29	29	N/C
30	30	CTRL_HD_MIC
	31	N/C
	32	N/C
	33	N/C
	34	N/C

Notes: ** Denotes active low signal*
† Denotes TRC signal name

Table 22. Radio Cable

Pin Number			Signal
Radio J6	**Radio J5**	**J1**	
1		1	PTT*
14		2	N/C
2		3	RS232-RXD
15		4	RSSI (N/C)†
3		5	RS232-TXD
16		6	N/C
4		7	RS232_RTS
17		8	N/C
5		9	RS232_CTS
18		10	DIG_GND
6		11	FILT_AUD (N/C)†
19		12	N/C
7		13	AUX_RX_AUD
20		14	N/C
8		15	AUX_TX_AUD
21		16	N/C
9		17	DET_AUD
22		18	SWB+
10		19	ANA_GND
23		20	CHAN_ACT*
11		21	MIC_LO (N/C)†
24		22	SPKR_LO
12		23	RAD_MIC (MIC_HI/ MOD_CTRL)†
25		24	SPKR_HI
13		25	N/C
	1	26	PTT*
	14	27	BUS-
	2	28	FLT_AUD_SHD
	15	29	RSSI (N/C)†
	3	30	IGN
	16	31	VO1
	4	32	N/C
	17	33	VO2
	5	34	BUS+
	18	35	DIG_GND
	6	36	FILT_AUD
	19	37	RESET
	7	38	AUX_RX_AUD
	20	39	N/C
	8	40	AUX_TX_AUD
	21	41	BUS_SHLD
	9	42	N/C (DET_AUD)†
	22	43	SWB+
	10	44	ANA_GND†
	23	45	BUSY
	11	46	MIC_LO
	24	47	SPKR_LO (N/C)†
	12	48	RAD_MIC (N/C)†
	25	49	SPKR_HI (N/C)†
	13	50	EMER

Notes: ** Denotes active low signal*
† Denotes TRC signal name

Table 23. Accessory Cable

Pin Number			Signal
Accessory 2	**Accessory 3**	**J3**	
1		1	RX+ (LINE1+)†
14		2	REMOTE_RX+ (SPKR_HI)†
2		3	AUD_SHLD
15		4	REMOTE_RX- (SPKR_LO)†
3		5	TX+ (LINE2+)†
16		6	RX- (LINE1-)†
4		7	FILT_AUD (DET_AUD)†
17		8	TX_AUD (AUD_TX)†
5		9	A+
18		10	VO3
6		11	BUSY
19		12	BUS-
7		13	BUS+
20		14	RESET
8		15	UNAVAILABLE
21		16	5V
9		17	VO1
22		18	VI3
10		19	PTT*
23		20	VO2
11		21	TX- (LINE2-)†
24		22	MONITOR*
12		23	DIG_GND
25		24	SPKR_UNMUTE
13		25	VI1
	1	26	RS232_RXD (N/C)†
	14	27	RS232_TXD (N/C)†
	2	28	ANA_GND
	15	29	RS232_RTS (N/C)†
	3	30	AUX_RX_AUD
	16	31	RS232_CTS (PS_AUD_OUT)†
	4	32	FILT_AUD (DET_AUD)†
	17	33	AUX_TX_AUD
	5	34	A+
	18	35	SWB+
	6	36	BUSY
	19	37	BUS-
	7	38	BUS+
	20	39	RESET
	8	40	BUS_SHLD
	21	41	N/C
	9	42	VSENSE1 (RS232_RXD)†
	22	43	N/C (RS232_TXD)†
	10	44	VSENSE1_SHLD
	23	45	VSENSE2 (RS232_RTS)†
	11	46	TAPE_OUT
	24	47	VSENSE2_SHLD
	12	48	DIG_GND
	25	49	N/C (RS232_CTS)†
	13	50	EMER

Notes: ** Denotes active low signal*
† Denotes TRC signal name

Optional Cables

Table 24. Clock/VU Cable

Pin Number		Signal
Clock/VU	**J6**	
1	1	VU_AUD
2	2	N/C
3	3	ANA_GND
4	4	A+

Notes

Diagrams and Parts Lists

6

List of Troubleshooting Charts

Title	Page
Consolette Does Not Work Troubleshooting Chart	53
Power Problem Troubleshooting Chart	54
TRC Local TX Troubleshooting Chart	55
TRC RX Audio Troubleshooting Chart	56
Trunking Tones Not Heard at Remote Console Troubleshooting Chart	57
TRC Board DC Voltage Troubleshooting Chart	58
TRC TX Audio Troubleshooting Chart	58
AIB TX Audio Troubleshooting Chart	59
AIB RX Audio Troubleshooting Chart	60
AIB DC Power Troubleshooting Chart	61

List of Schematics, Boards, and Parts Lists

Title	Page
ASTRO Spectra Consolette Exploded View	63
TRN 7393B Control Head Interface Board Schematic	64
TRN7393B Component Location Diagram - Side 1	64
TRN7393B Component Location Diagram - Side 2	64
ASTRO Spectra Consolette Exploded View Parts List	65
TRN7393B Control Head Interface Board Parts List	65
Tone Remote Control Board Block Diagram	66
Audio Interface Board Block Diagram	67
TRN7391C Audio Interface Board Schematic Diagram (Sheet 1 of 2)	68
TRN7391C Audio Interface Board Schematic Diagram (Sheet 2 of 2)	69
TRN7391C Audio Interface Board	70
TRN7391C Audio Interface Board Parts List	71
PLN1360C Tone Remote Control Board Component Location Diagram (viewed from side 1)	73
PLN1360C Tone Remote Control Board Schematic Diagram (Sheet 1 of 6)	74
PLN1360C Tone Remote Control Board Schematic Diagram (Sheet 2 of 6)	75
PLN1360C Tone Remote Control Board Schematic Diagram (Sheet 3 of 6)	76
PLN1360C Tone Remote Control Board Schematic Diagram (Sheet 4 of 6)	77
PLN1360C Tone Remote Control Board Schematic Diagram (Sheet 5 of 6)	78
PLN1360C Tone Remote Control Board Schematic Diagram (Sheet 6 of 6)	79
PLN1360C Tone Remote Control Board Electrical Parts List	80

Notes

Troubleshooting Charts

CONSOLETTE DOES NOT WORK

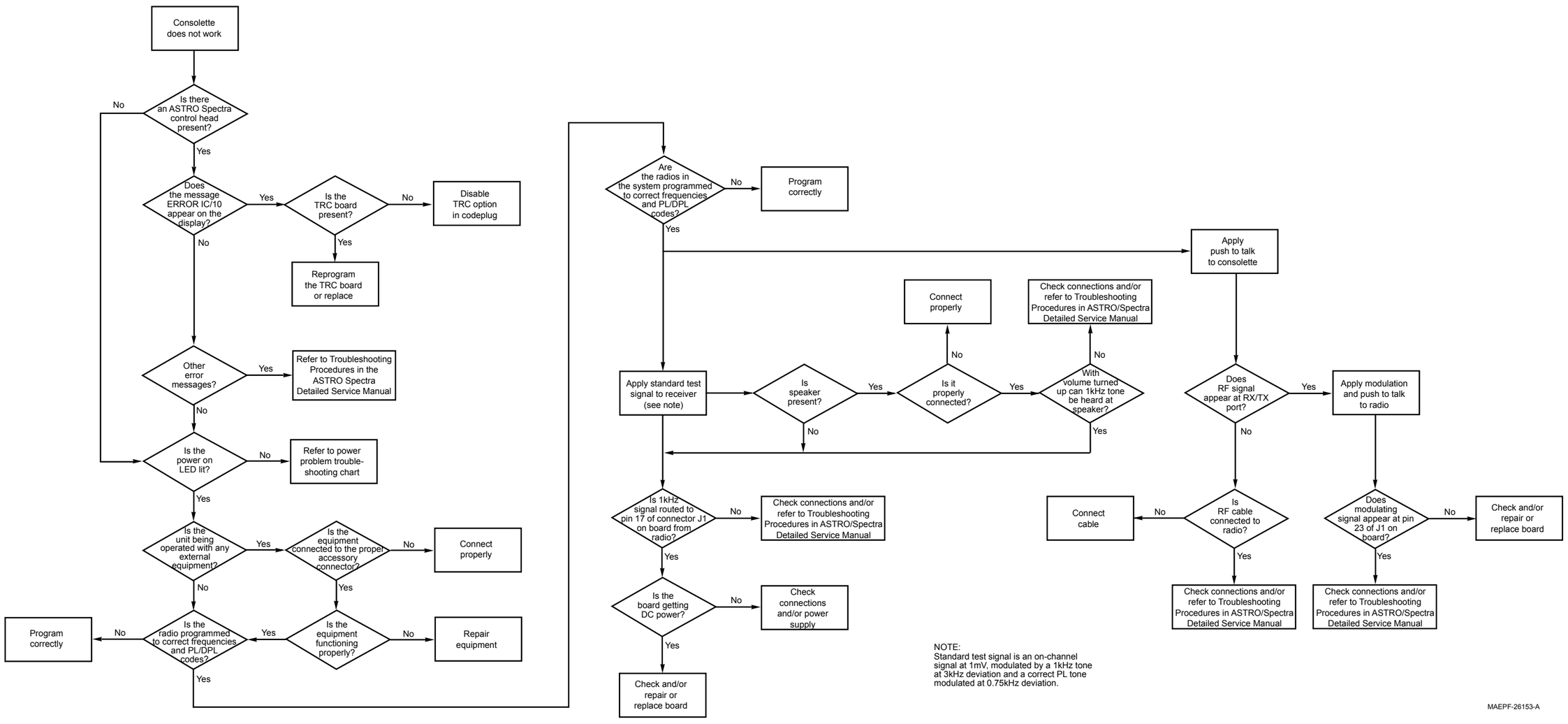

Consolette Does Not Work Troubleshooting Chart

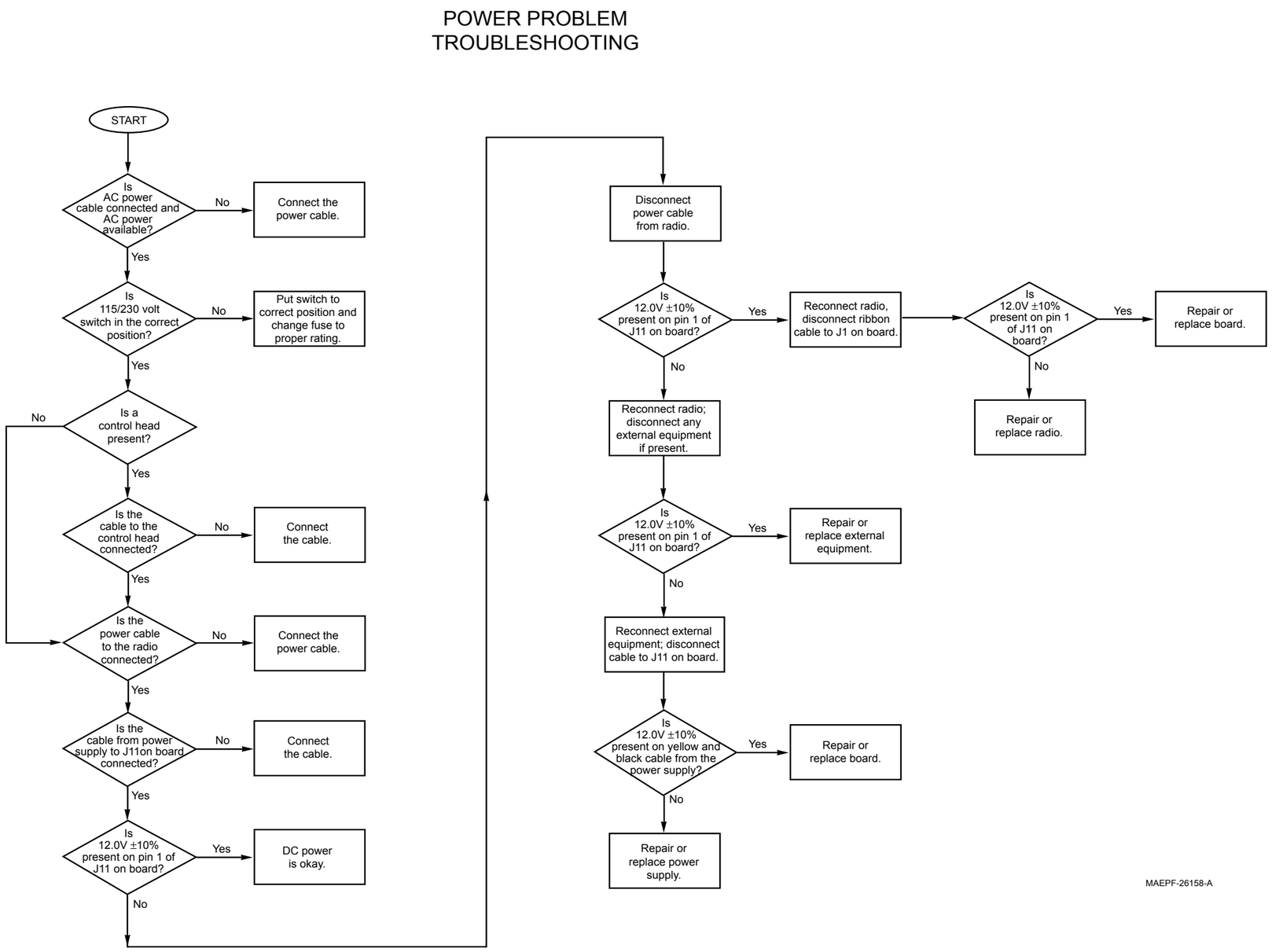

Power Problem Troubleshooting Chart

TRC LOCAL TX

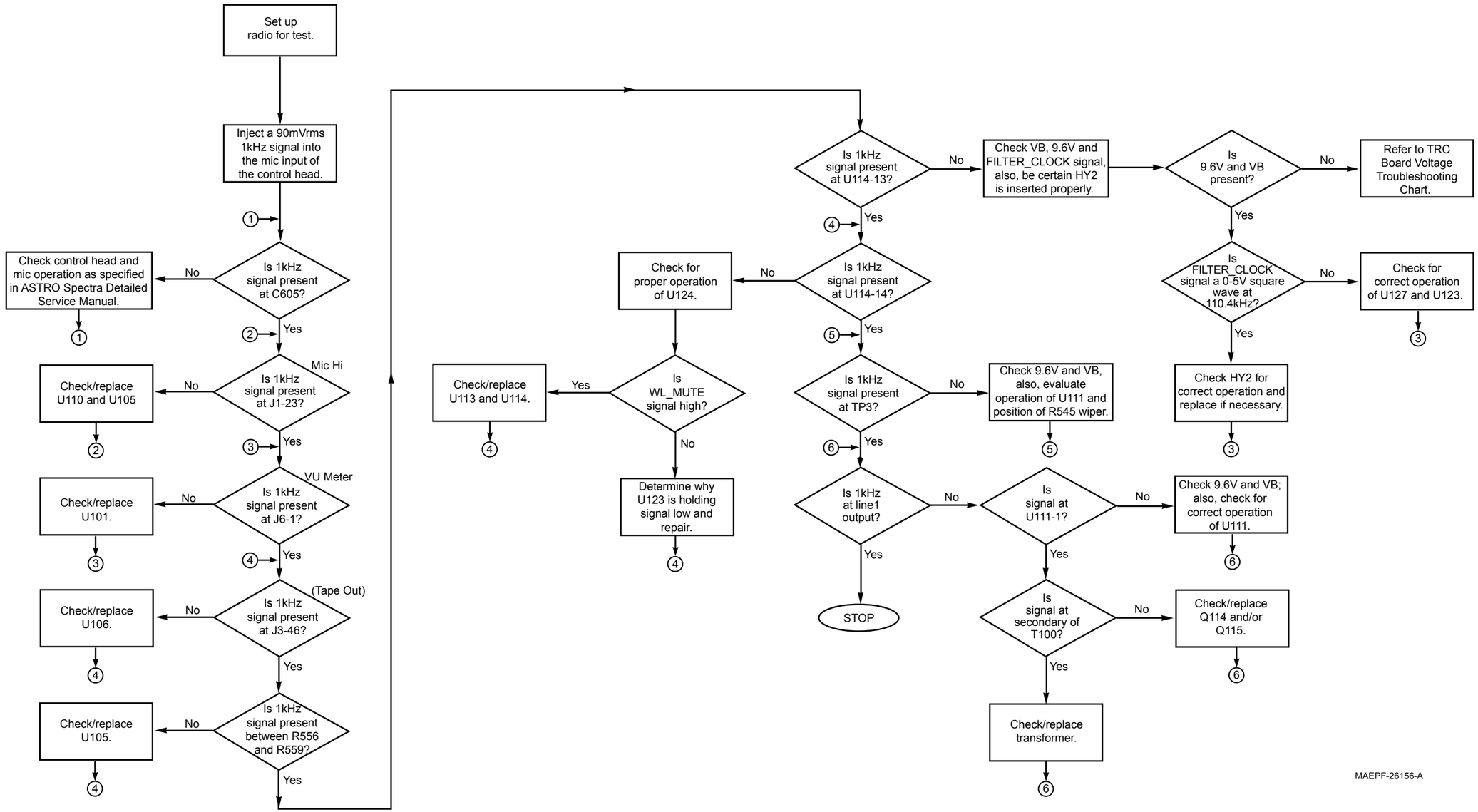

TRC Local TX Troubleshooting Chart

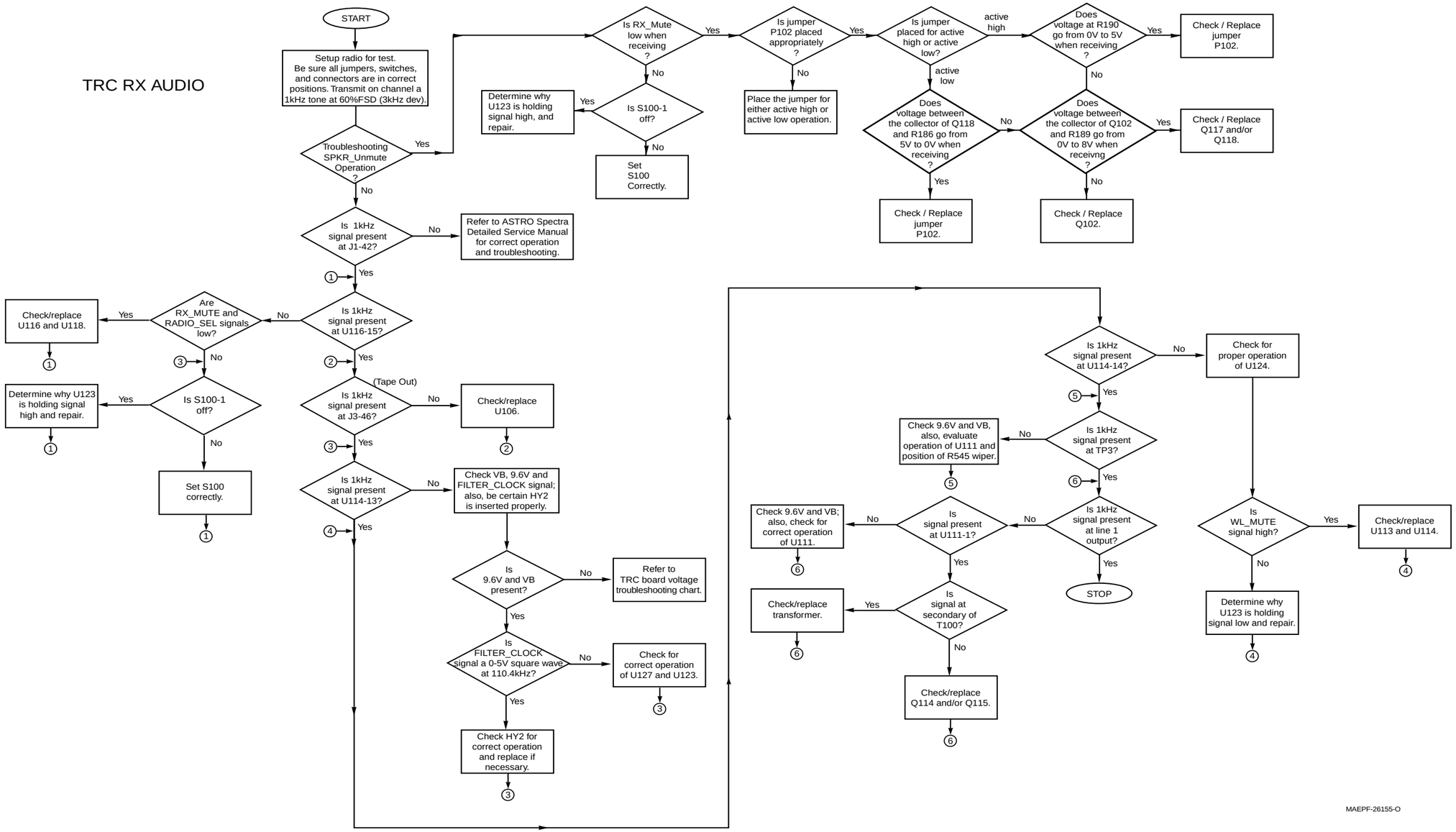

TRC RX Audio Troubleshooting Chart

TRUNKING/MDC TONES NOT HEARD
AT REMOTE CONSOLE

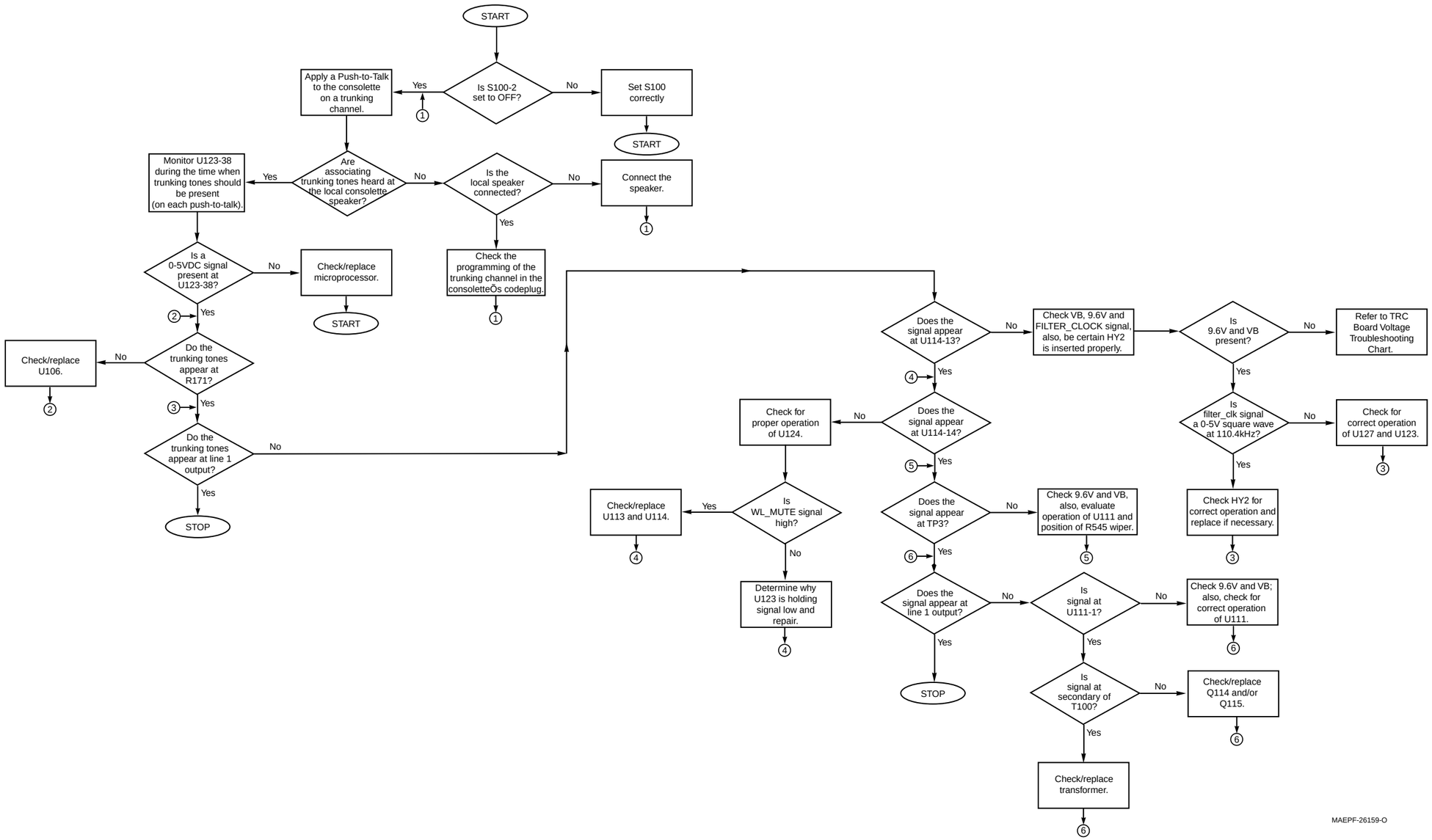

Trunking Tones Not Heard at Remote Console Troubleshooting Chart

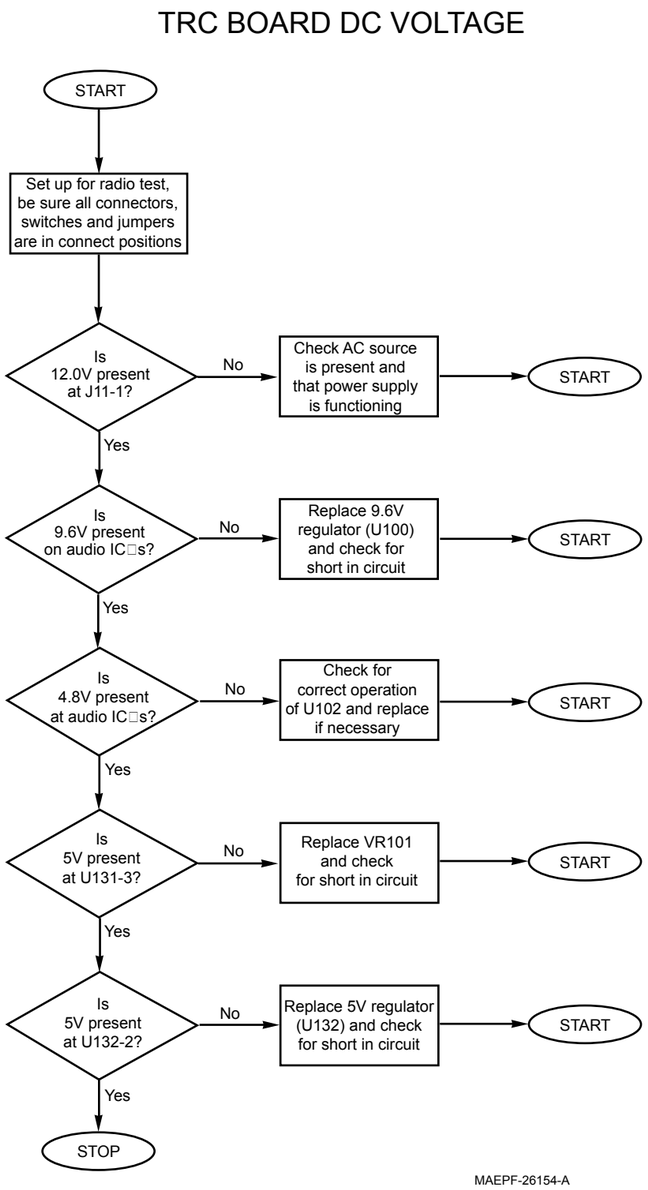

TRC Board DC Voltage Troubleshooting Chart

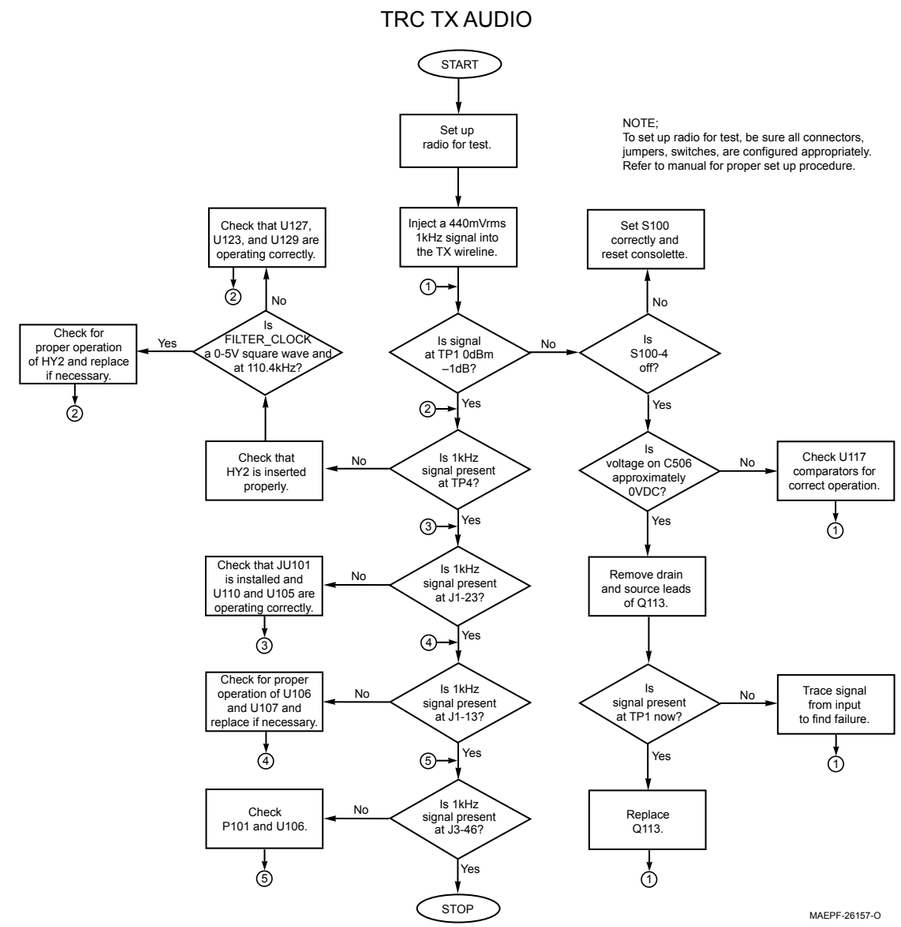

TRC TX Audio Troubleshooting Chart

AIB TX AUDIO

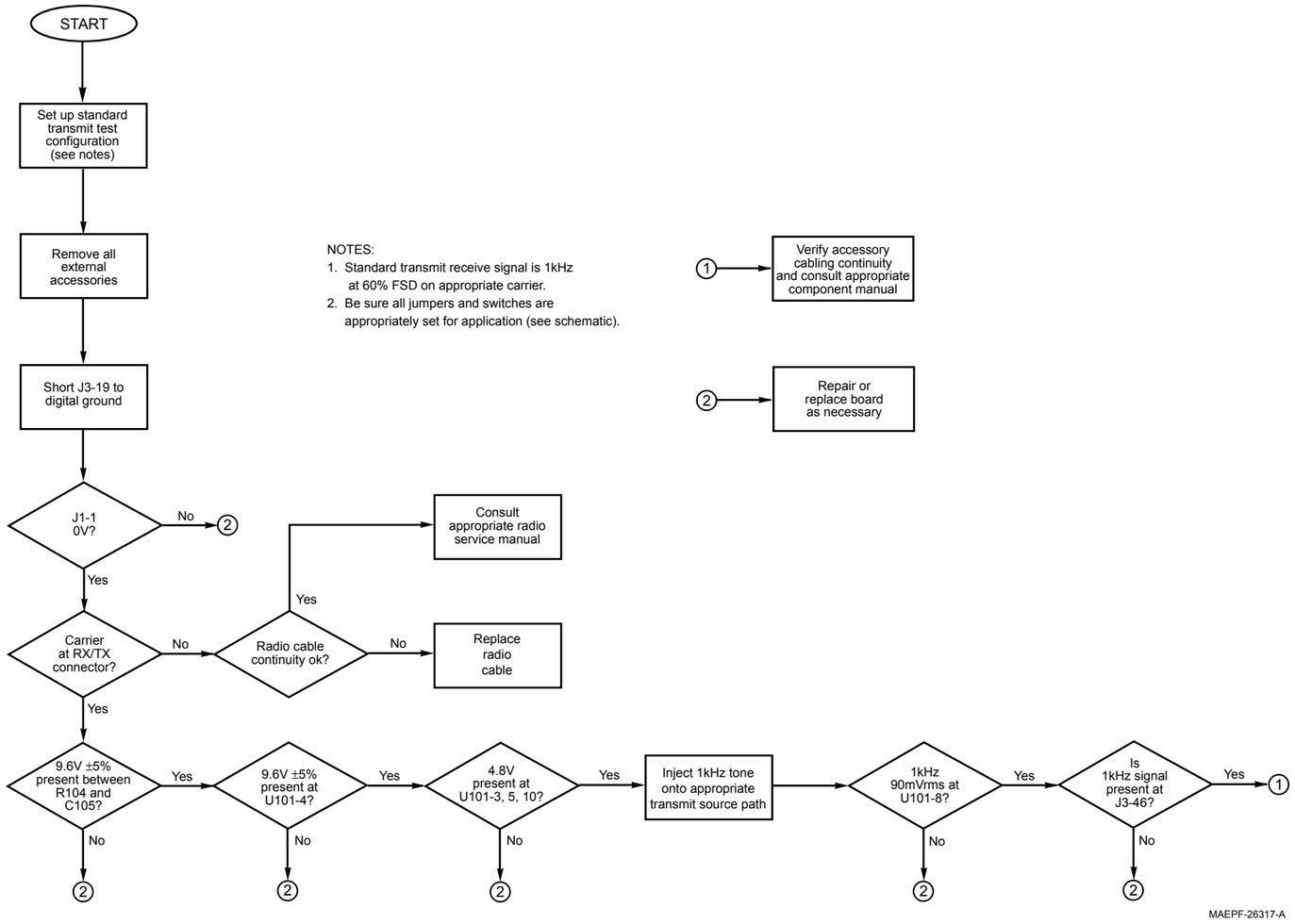

AIB TX Audio Troubleshooting Chart

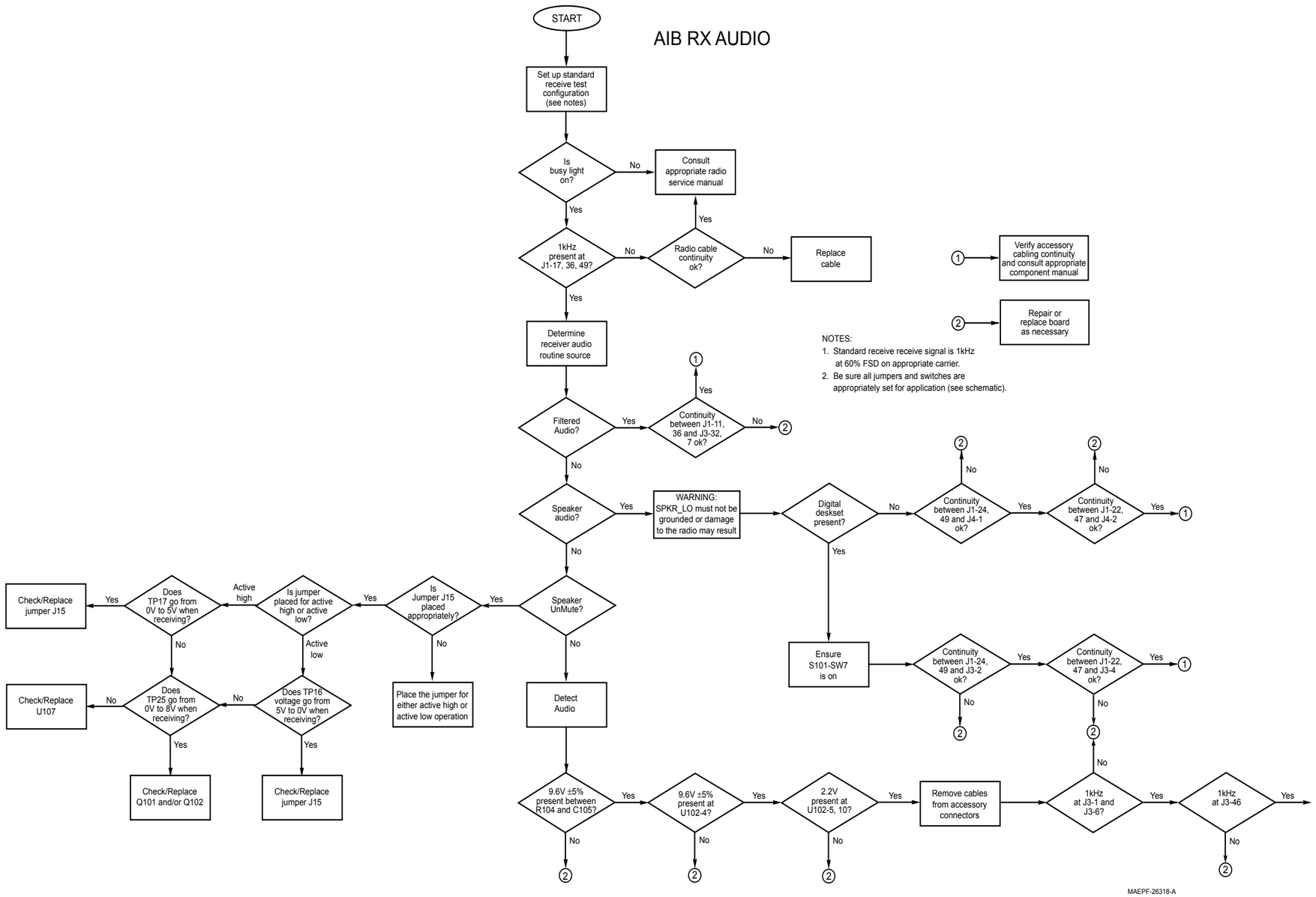

AIB RX Audio Troubleshooting Chart

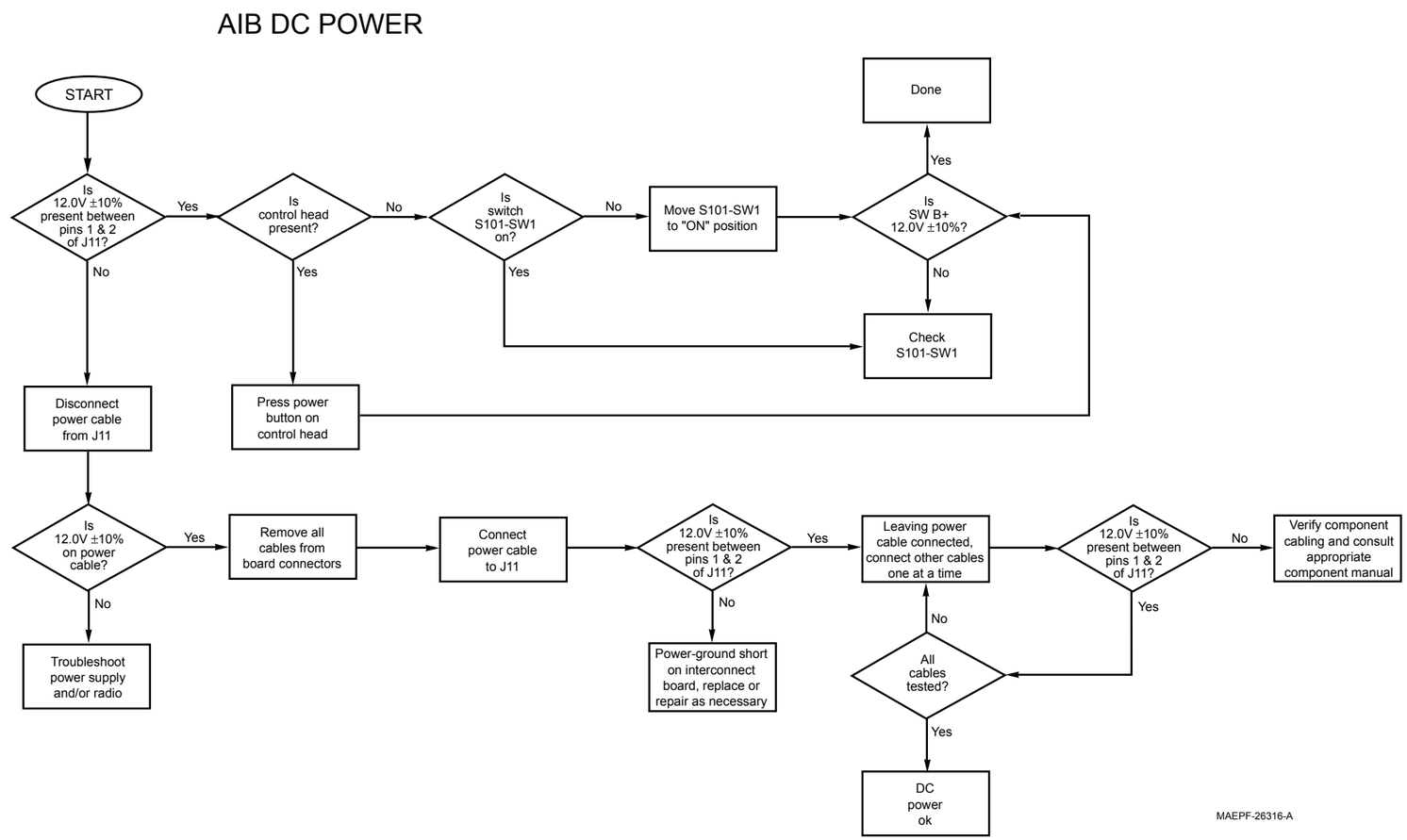

AIB DC Power Troubleshooting Chart

Notes

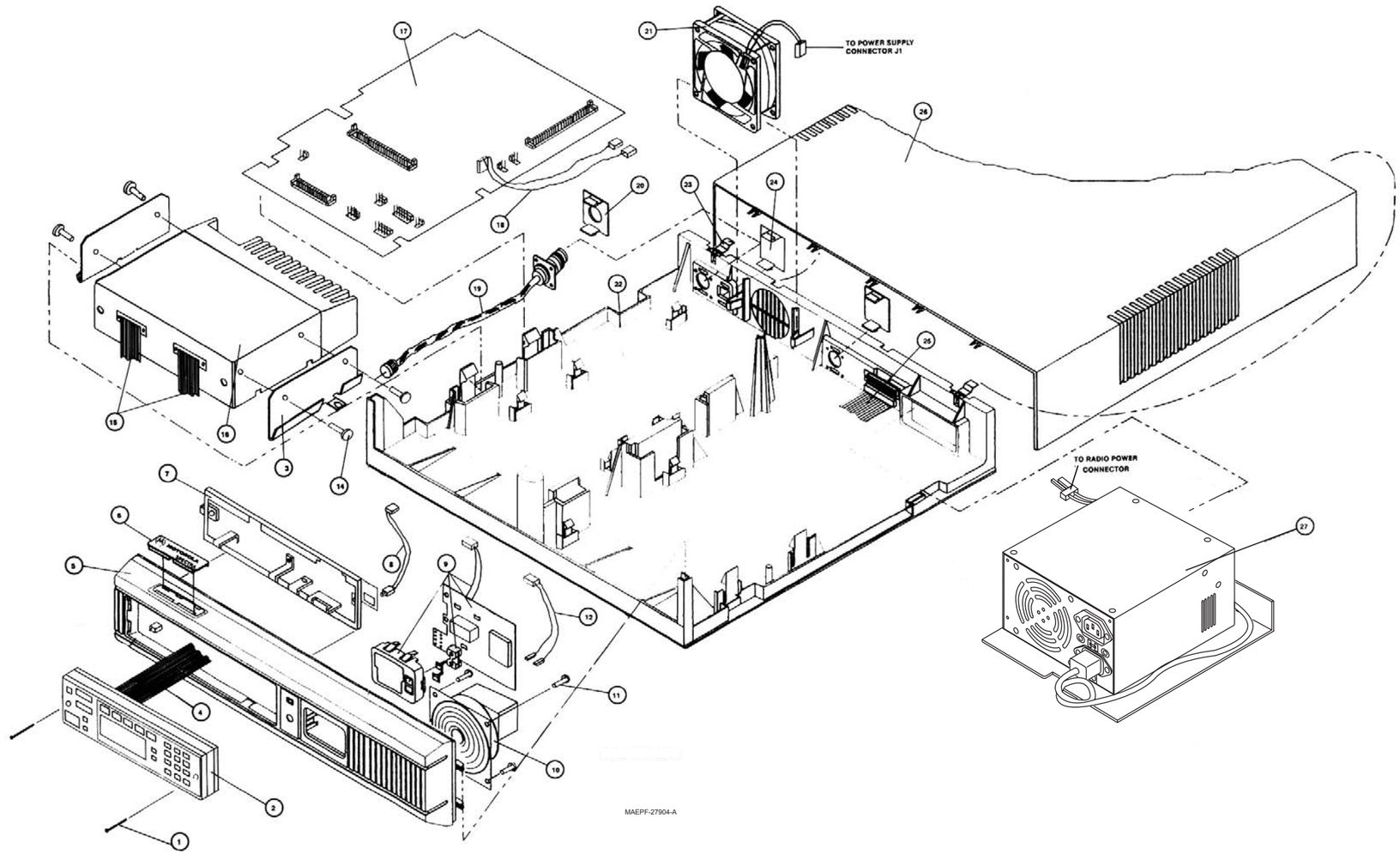

ASTRO Spectra Consolette Exploded View

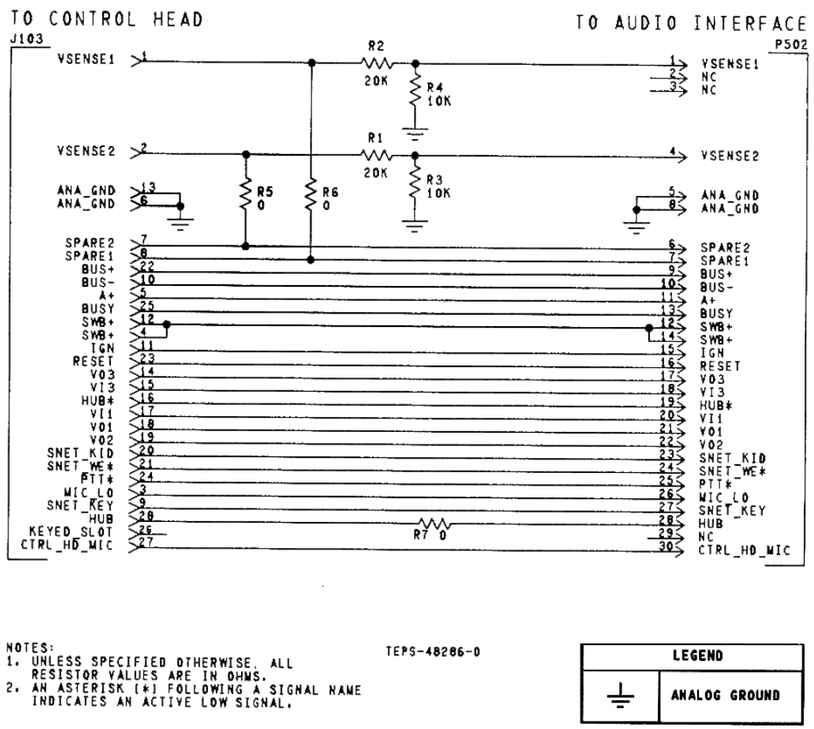

TRN 7393B Control Head Interface Board Schematic

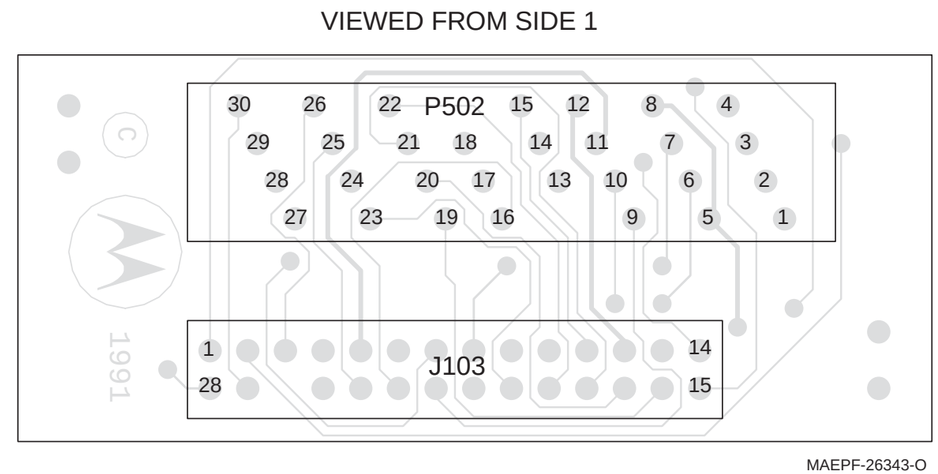

TRN7393B Component Location Diagram - Side 1

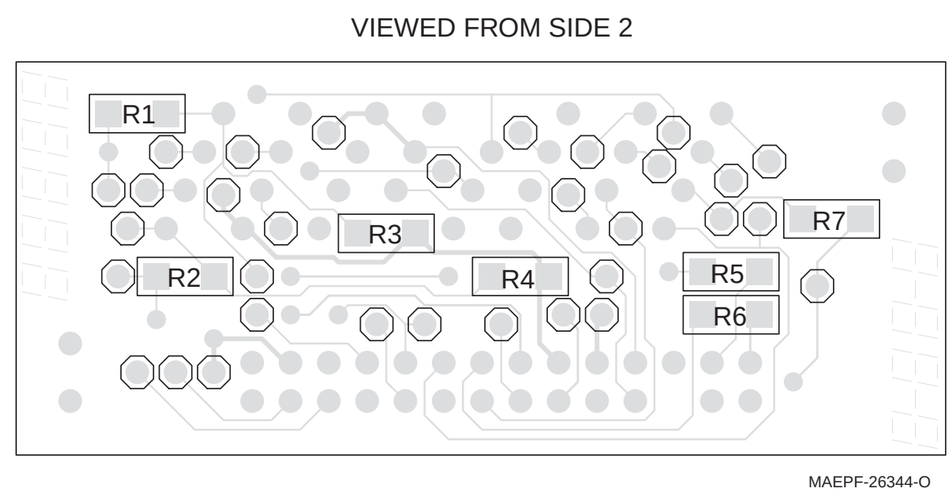

TRN7393B Component Location Diagram - Side 2

ASTRO Spectra Consolette Exploded View Parts List

Ref. Des.	Part Number	Description
1	0385144C01	SCREW, Control Panel (2 req'd)
2	HLN1072A	CONTROL HEAD, ASTRO Spectra
4	3083139N40	CABLE, Control Head
5	6408270S01	PANEL, Front
6	3308509S05	NAMEPLATE
7	0784466T01	BRACKET, Control Head
8	3084459T01	CABLE, LED
9	L114	OPTION, Clock/VU Meter
10	5005913X02	SPEAKER
11	0310945A11	SCREW, Speaker (4 req'd)
12	3084457T01	CABLE, Speaker
13	0784465T01	BRACKET, Radio (2 req'd)
14	0380114M02	SCREW, Radio Bracket (4 req'd)
15	3084460T01	CABLE, Radio
16		RADIO, ASTRO Spectra/ Spectra Plus
17	TRN7391 and PLN1360	Audio Interface Board Tone Remote Control Board (Optional)
18	3084493T01	CABLE Power
19	0112004E09	CABLE, Antenna
20	3808649S01	SUPPORT, N-Type
21	FRN5358A	FAN
22	2708271S01 *or* 2708271S02	CHASSIS, Main CHASSIS, Main
23	5508626S01	LATCH (2 req'd)
24	3808649S02	COVER, N-Type (2 req'd)
25	3084462T01	CABLE, Accessory
26	1508346S01	COVER, Top
27	HPN4005	SUPPLY, Power

TRN7393B Control Head Interface Board Parts List

Res. Des.	Part Number	Description
		CONNECTOR:
J103	0980113M03	Receptacle, 28-Contact
		CONNECTOR:
P502	3083139N40	Cable, Flat (with connectors)
		RESISTOR: Ω±5%; 1/8W unless stated
R1, 2	0611077B06	20k
R3, 4	0611077A98	10k
R5 thru 7	0611077A01	0Ω
		MISCELLANEOUS:
	5483865R01	Label, Bar Code; 1/4" Wide
	8484501T03	Board, Circuit

Notes:

1. For optimum performance, order replacement diodes, transistors, and circuit modules by Motorola part number only.
2. Part value notations:
   p=10^{-12} n=10^{-9} μ=10^{-6}
   m=10^{-3} k=10^{3} M=10^{6}

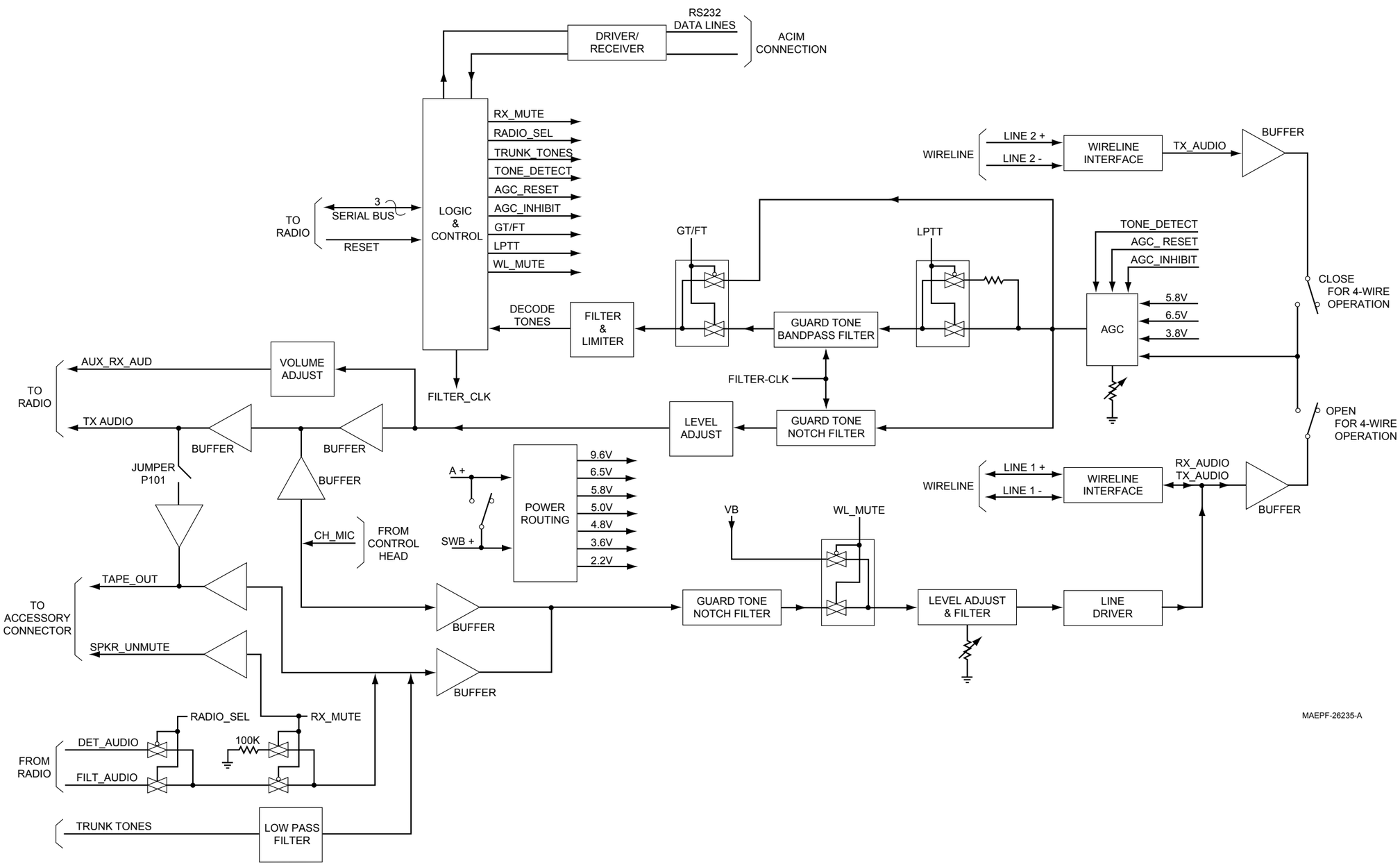

Tone Remote Control Board Block Diagram

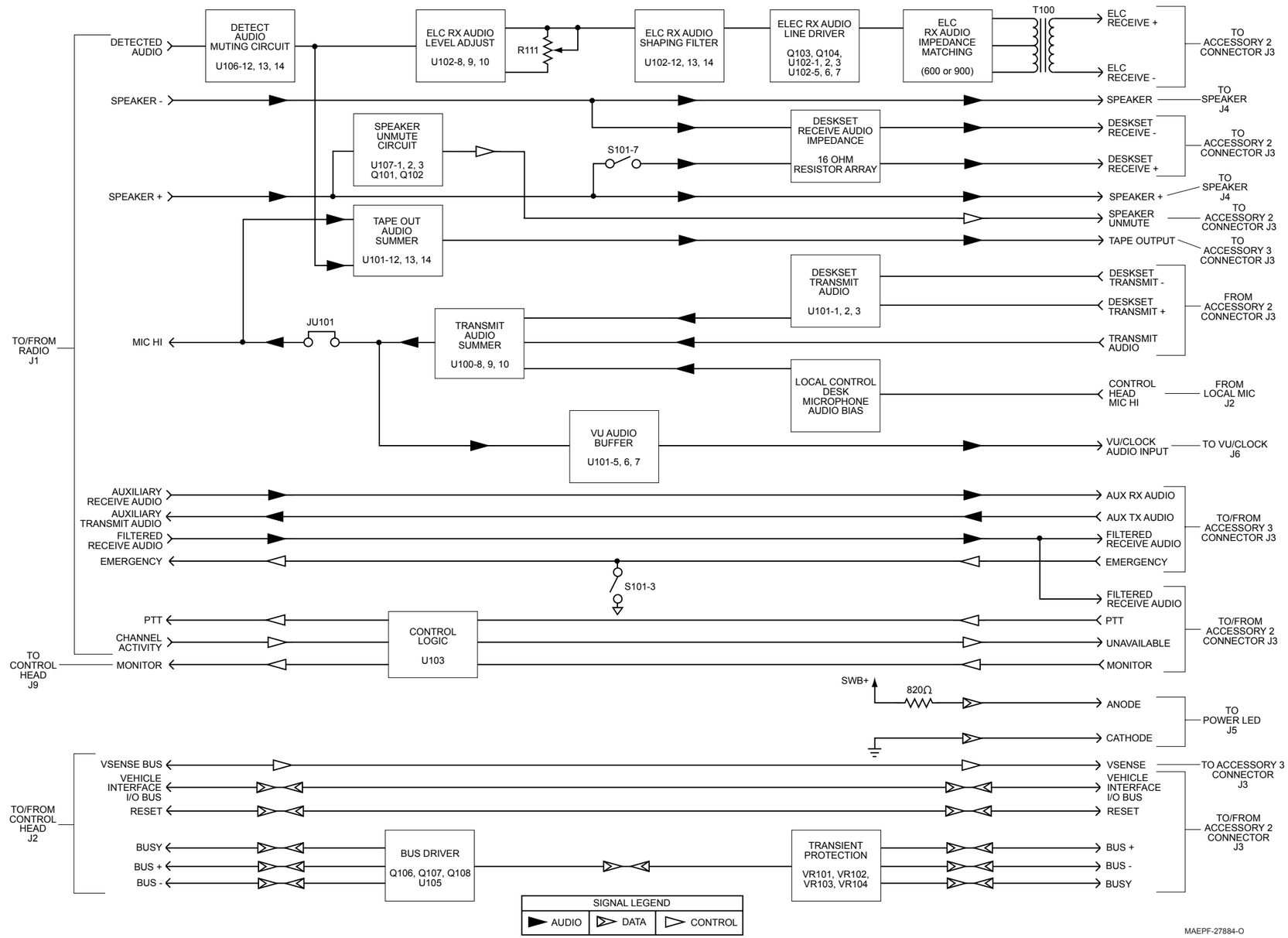

Audio Interface Board Block Diagram

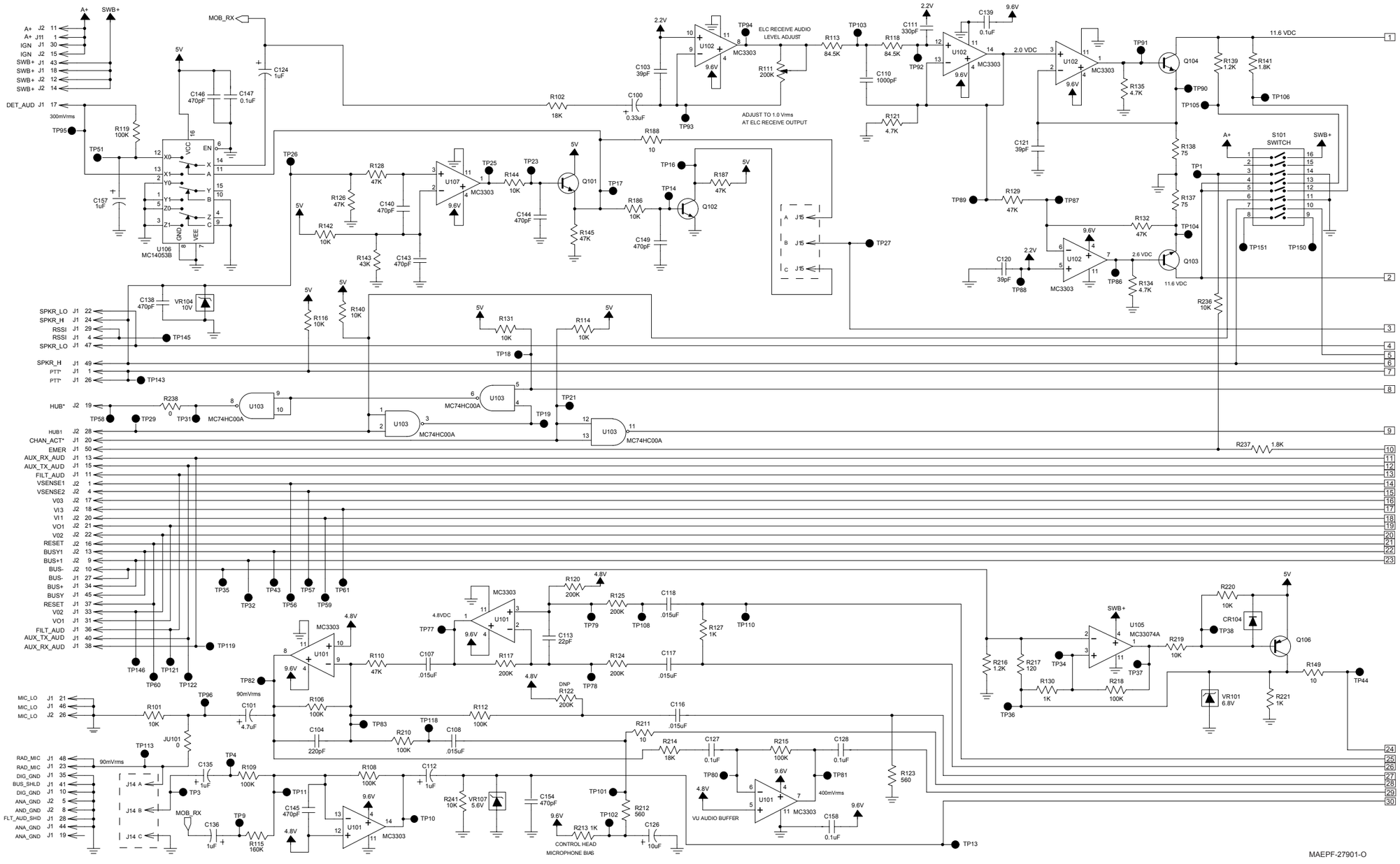

TRN7391C Audio Interface Board Schematic Diagram (Sheet 1 of 2)

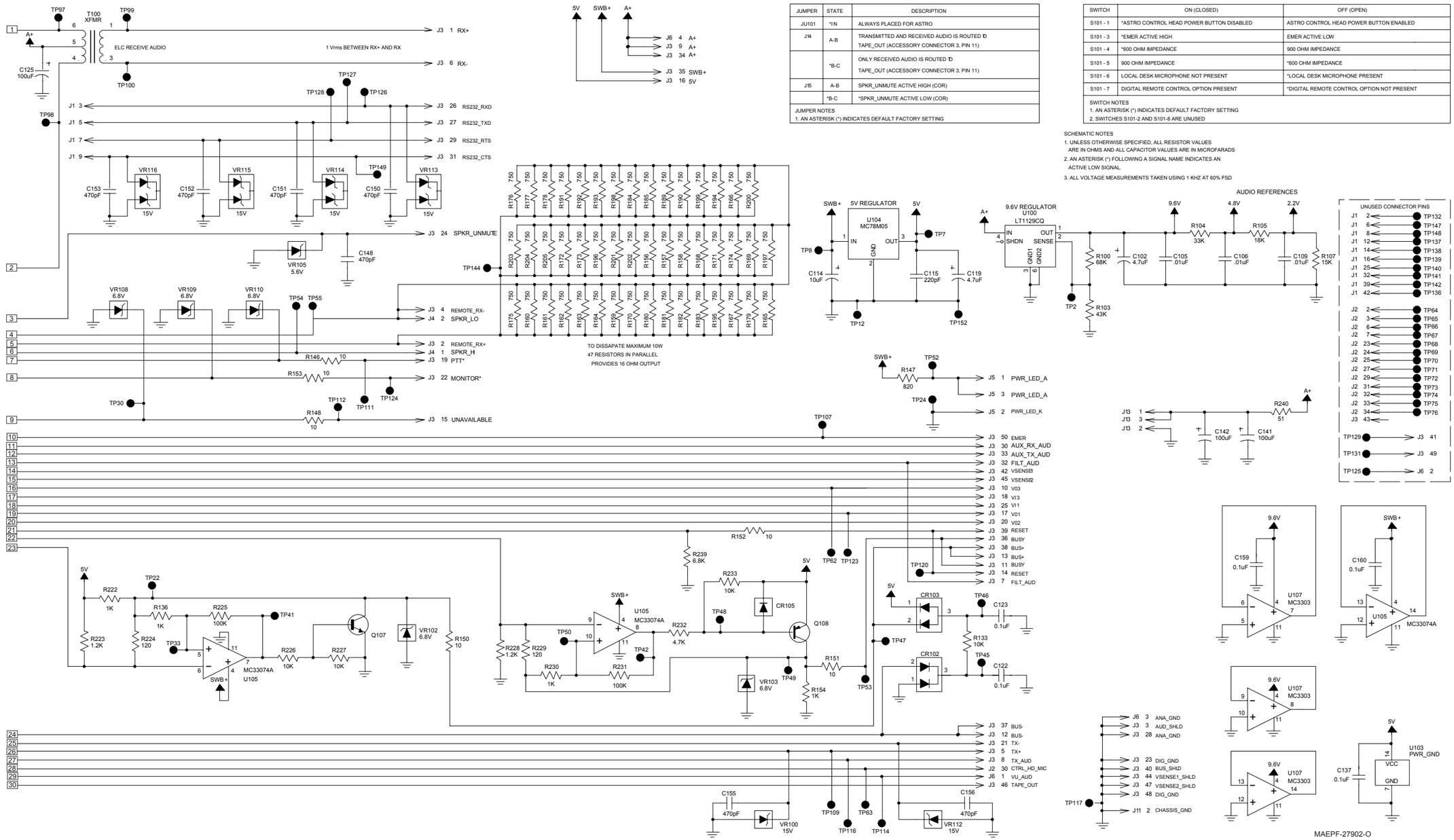

JUMPER	STATE	DESCRIPTION
JU101	*IN	ALWAYS PLACED FOR ASTRO
J14	A-B	TRANSMITTED AND RECEIVED AUDIO IS ROUTED TO TAPE_OUT (ACCESSORY CONNECTOR 3, PIN 11)
	*B-C	ONLY RECEIVED AUDIO IS ROUTED TO TAPE_OUT (ACCESSORY CONNECTOR 3, PIN 11)
J15	A-B	SPKR_UNMUTE ACTIVE HIGH (COR)
	*B-C	*SPKR_UNMUTE ACTIVE LOW (COR)

JUMPER NOTES
1. AN ASTERISK (*) INDICATES DEFAULT FACTORY SETTING

SWITCH	ON (CLOSED)	OFF (OPEN)
S101 - 1	*ASTRO CONTROL HEAD POWER BUTTON DISABLED	ASTRO CONTROL HEAD POWER BUTTON ENABLED
S101 - 3	*EMER ACTIVE HIGH	EMER ACTIVE LOW
S101 - 4	*600 OHM IMPEDANCE	900 OHM IMPEDANCE
S101 - 5	900 OHM IMPEDANCE	*600 OHM IMPEDANCE
S101 - 6	LOCAL DESK MICROPHONE NOT PRESENT	*LOCAL DESK MICROPHONE PRESENT
S101 - 7	DIGITAL REMOTE CONTROL OPTION PRESENT	*DIGITAL REMOTE CONTROL OPTION NOT PRESENT

SWITCH NOTES
1. AN ASTERISK (*) INDICATES DEFAULT FACTORY SETTING
2. SWITCHES S101-2 AND S101-8 ARE UNUSED

SCHEMATIC NOTES
1. UNLESS OTHERWISE SPECIFIED, ALL RESISTOR VALUES ARE IN OHMS AND ALL CAPACITOR VALUES ARE IN MICROFARADS
2. AN ASTERISK (*) FOLLOWING A SIGNAL NAME INDICATES AN ACTIVE LOW SIGNAL
3. ALL VOLTAGE MEASUREMENTS TAKEN USING 1 KHZ AT 60% FSD

TRN7391C Audio Interface Board Schematic Diagram (Sheet 2 of 2)

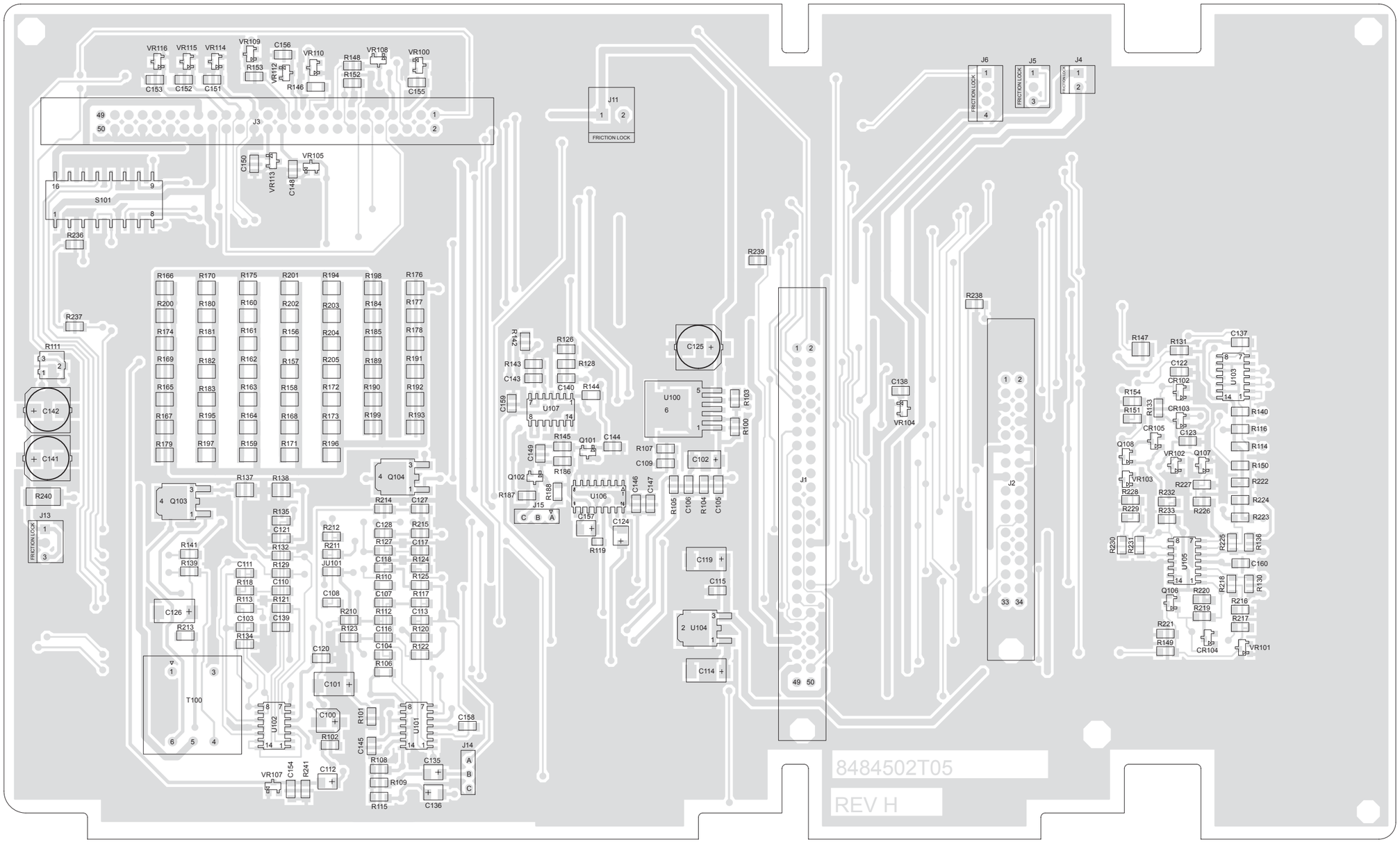

MAEPF-27903-O

TRN7391C Audio Interface Board

TRN7391C Audio Interface Board Parts List

Ref. Des.	Part Number	Description
	0984728L01	Socket, Yellow Conn.
	0984728L01	Socket, Yellow Conn.
C100	2380090M15	CAP,0.33uF
C101	2311049A15	CAP,4.7uF
C102	2311049A14	CAP,4.7uF
C103	2113740B39	CAP,39pF
C104	2113740B57	CAP,220pF
C105	2113741B45	CAP,.01uF
C106	2113741B45	CAP,.01uF
C107	2113741B49	CAP,.015uF
C108	2113741B49	CAP,.015uF
C109	2113741B45	CAP,.01uF
C110	2113740B73	CAP,1000pF
C111	2113740B61	CAP,330pF
C112	2311049A08	CAP,1uF
C113	2113740B33	CAP,22pF
C114	2311049A45	CAP,10uF
C115	2113740B57	CAP,220pF
C116	2113741B49	CAP,.015uF
C117	2113741B49	CAP,.015uF
C118	2113741B49	CAP,.015uF
C119	2311049A15	CAP,4.7uF
C120	2113740B39	CAP,39pF
C121	2113740B39	CAP,39pF
C122	2113741B69	CAP,0.1uF
C123	2113741B69	CAP,0.1uF
C124	2311049A08	CAP,1uF
C125	2380090M25	CAP,100uF
C126	2311049A45	CAP,10uF
C127	2113741B69	CAP,0.1uF
C128	2113741B69	CAP,0.1uF
C135	2311049A08	CAP,1uF

Ref. Des.	Part Number	Description
C136	2311049A08	CAP,1uF
C137	2113741B69	CAP,0.1uF
C138	2113740B65	CAP,470pF
C139	2113741B69	CAP,0.1uF
C140	2113740B65	CAP,470pF
C141	2380090M25	CAP,100uF
C142	2380090M25	CAP,100uF
C143	2113740B65	CAP,470pF
C144	2113740B65	CAP,470pF
C145	2113740B65	CAP,470pF
C146	2113740B65	CAP,470pF
C147	2113741B69	CAP,0.1uF
C148	2113740B65	CAP,470pF
C149	2113740B65	CAP,470pF
C150	2113740B65	CAP,470pF
C151	2113740B65	CAP,470pF
C152	2113740B65	CAP,470pF
C153	2113740B65	CAP,470pF
C154	2113740B65	CAP,470pF
C155	2113740B65	CAP,470pF
C156	2113740B65	CAP,470pF
C157	2311049A08	CAP,1uF
C158	2113741B69	CAP,0.1uF
C159	2113741B69	CAP,0.1uF
C160	2113741B69	CAP,0.1uF
CR102	4813833C04	BAV70
CR103	4813833C03	BAW56
CR104	4813833C10	MMBD6050
CR105	4813833C10	MMBD6050
J1	2882505T15	CONN_P
J2	2882505T04	CONN_P
J3	2882505T15	CONN_P

Ref. Des.	Part Number	Description
J4	2884324M07	CONN_P
J5	2884324M08	CONN_P
J6	2884324M09	CONN_P
J11	2880004T02	CONN_P
J13	2884324M08	CONN_P
J14	2880001R03	CONN_P
J15	2880001R03	CONN_P
JU101	0611077A01	RES, 0
Q101	4813824A10	MMBT3904
Q102	4813824A10	MMBT3904
Q103	4813822A07	MJD340
Q104	4813822A07	MJD340
Q106	4813824A18	MMBT4403
Q107	4813824A11	MMBT2222A
Q108	4813824A18	MMBT4403
R100	0611077B19	RES,68K
R101	0611077A98	RES,10K
R102	0611077B05	RES,18K
R103	0611077B14	RES,43K
R104	0611077B11	RES,33K
R105	0611077B05	RES,18K
R106	0611077B23	RES,100K
R107	0611077B03	RES,15K
R108	0611077B23	RES,100K
R109	0611077B23	RES,100K
R110	0611077B15	RES,47K
R111	1813905A14	RES,200K
R112	0611077B23	RES,100K
R113	0611077G81	RES,84.5K
R114	0611077A98	RES,10K
R115	0611077B28	RES,160K
R116	0611077A98	RES,10K

Ref. Des.	Part Number	Description
R117	0611077B30	RES,200K
R118	0611077G81	RES,84.5K
R119	0611079B23	RES,100K
R120	0611077B30	RES,200K
R121	0611077A90	RES,4.7K
R122	0611077B30	RES,200K
R123	0611077A68	RES,560
R124	0611077B30	RES,200K
R125	0611077B30	RES,200K
R126	0611077B15	RES,47K
R127	0611077A74	RES,1K
R128	0611077B15	RES,47K
R129	0611077B15	RES,47K
R130	0611077A74	RES,1K
R131	0611077A98	RES,10K
R132	0611077B15	RES,47K
R133	0611077A98	RES,10K
R134	0611077A90	RES,4.7K
R135	0611077A90	RES,4.7K
R136	0611077A74	RES,1K
R137	0611072A22	RES,75
R138	0611072A22	RES,75
R139	0611077A76	RES,1.2K
R140	0611077A98	RES,10K
R141	0611077A80	RES,1.8K
R142	0611077A98	RES,10K
R143	0611077B14	RES,43K
R144	0611077A98	RES,10K
R145	0611077B15	RES,47K
R146	0611077A26	RES,10
R147	0611072A47	RES,820
R148	0611077A26	RES,10

Ref. Des.	Part Number	Description
R149	0611077A26	RES,10
R150	0611077A26	RES,10
R151	0611077A26	RES,10
R152	0611077A26	RES,10
R153	0611077A26	RES,10
R154	0611077A74	RES,1K
R156	0611072A46	RES,750
R157	0611072A46	RES,750
R158	0611072A46	RES,750
R159	0611072A46	RES,750
R160	0611072A46	RES,750
R161	0611072A46	RES,750
R162	0611072A46	RES,750
R163	0611072A46	RES,750
R164	0611072A46	RES,750
R165	0611072A46	RES,750
R166	0611072A46	RES,750
R167	0611072A46	RES,750
R168	0611072A46	RES,750
R169	0611072A46	RES,750
R170	0611072A46	RES,750
R171	0611072A46	RES,750
R172	0611072A46	RES,750
R173	0611072A46	RES,750
R174	0611072A46	RES,750
R175	0611072A46	RES,750
R176	0611072A46	RES,750
R177	0611072A46	RES,750
R178	0611072A46	RES,750
R179	0611072A46	RES,750
R180	0611072A46	RES,750
R181	0611072A46	RES,750

Ref. Des.	Part Number	Description
R182	0611072A46	RES,750
R183	0611072A46	RES,750
R184	0611072A46	RES,750
R185	0611072A46	RES,750
R186	0611077A98	RES,10K
R187	0611077B15	RES,47K
R188	0611077A26	RES,10
R189	0611072A46	RES,750
R190	0611072A46	RES,750
R191	0611072A46	RES,750
R192	0611072A46	RES,750
R193	0611072A46	RES,750
R194	0611072A46	RES,750
R195	0611072A46	RES,750
R196	0611072A46	RES,750
R197	0611072A46	RES,750
R198	0611072A46	RES,750
R199	0611072A46	RES,750
R200	0611072A46	RES,750
R201	0611072A46	RES,750
R202	0611072A46	RES,750
R203	0611072A46	RES,750
R204	0611072A46	RES,750
R205	0611072A46	RES,750
R210	0611077B23	RES,100K
R211	0611077A26	RES,10
R212	0611077A68	RES,560
R213	0611077A74	RES,1K
R214	0611077B05	RES,18K
R215	0611077B23	RES,100K
R216	0611077A76	RES,1.2K
R217	0611077A52	RES,120

Ref. Des.	Part Number	Description
R218	0611077B23	RES,100K
R219	0611077A98	RES,10K
R220	0611077A98	RES,10K
R221	0611077A74	RES,1K
R222	0611077A74	RES,1K
R223	0611077A76	RES,1.2K
R224	0611077A52	RES,120
R225	0611077B23	RES,100K
R226	0611077A98	RES,10K
R227	0611077A98	RES,10K
R228	0611077A76	RES,1.2K
R229	0611077A52	RES,120
R230	0611077A74	RES,1K
R231	0611077B23	RES,100K
R232	0611077A90	RES,4.7K
R233	0611077A98	RES,10K
R236	0611077A98	RES,10K
R237	0611077A80	RES,1.8K
R238	0611077A01	RES,0
R239	0611077A94	RES,6.8K
R240	0680194M18	RES,51
R241	0611077A98	RES,10K
S101	4083706T01	SWITCH
T100	2584422T01	XFMR
U100	5105109Z13	LT1129CQ
U101	5113819A04	MC3303
U102	5113819A04	MC3303
U103	5113805A01	MC74HC00A
U104	5113816A07	MC78M05
U105	5113819A05	MC33074A
U106	5113806A20	MC14053B
U107	5113819A04	MC3303

Ref. Des.	Part Number	Description
VR100	4813830A28	MMBZ5245B
VR101	4813830A18	MMBZ5235B
VR102	4813830A18	MMBZ5235B
VR103	4813830A18	MMBZ5235B
VR104	4813830A23	MMBZ5240B
VR105	4813830A15	MMBZ5232B
VR107	4813830A15	MMBZ5232B
VR108	4813830A18	MMBZ5235B
VR109	4813830A18	MMBZ5235B
VR110	4813830A18	MMBZ5235B
VR112	4813830A28	MMBZ5245B
VR113	4813832C28	MMBZ15
VR114	4813832C28	MMBZ15
VR115	4813832C28	MMBZ15
VR116	4813832C28	MMBZ15

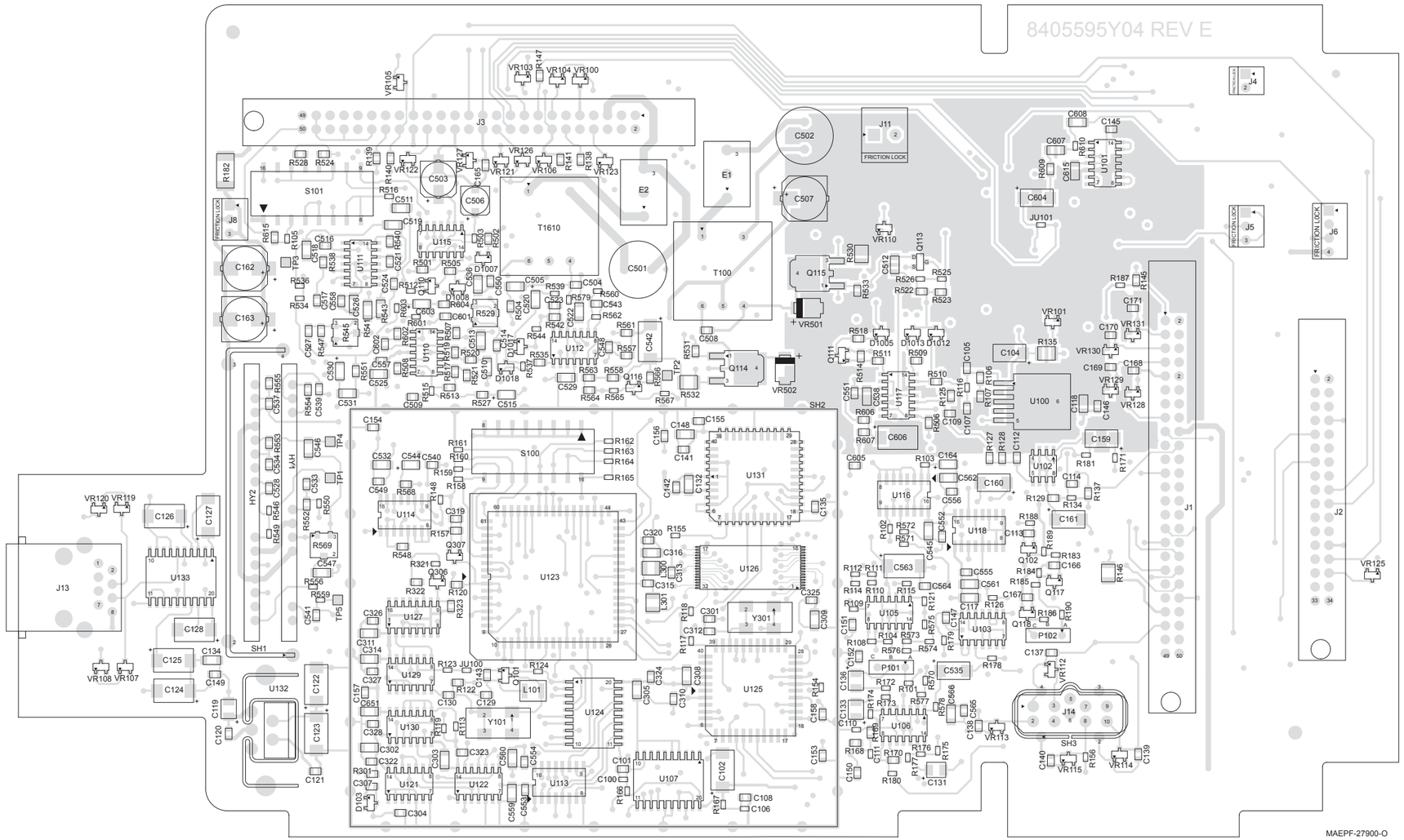

PLN1360C Tone Remote Control Board Component Location Diagram (viewed from side 1)

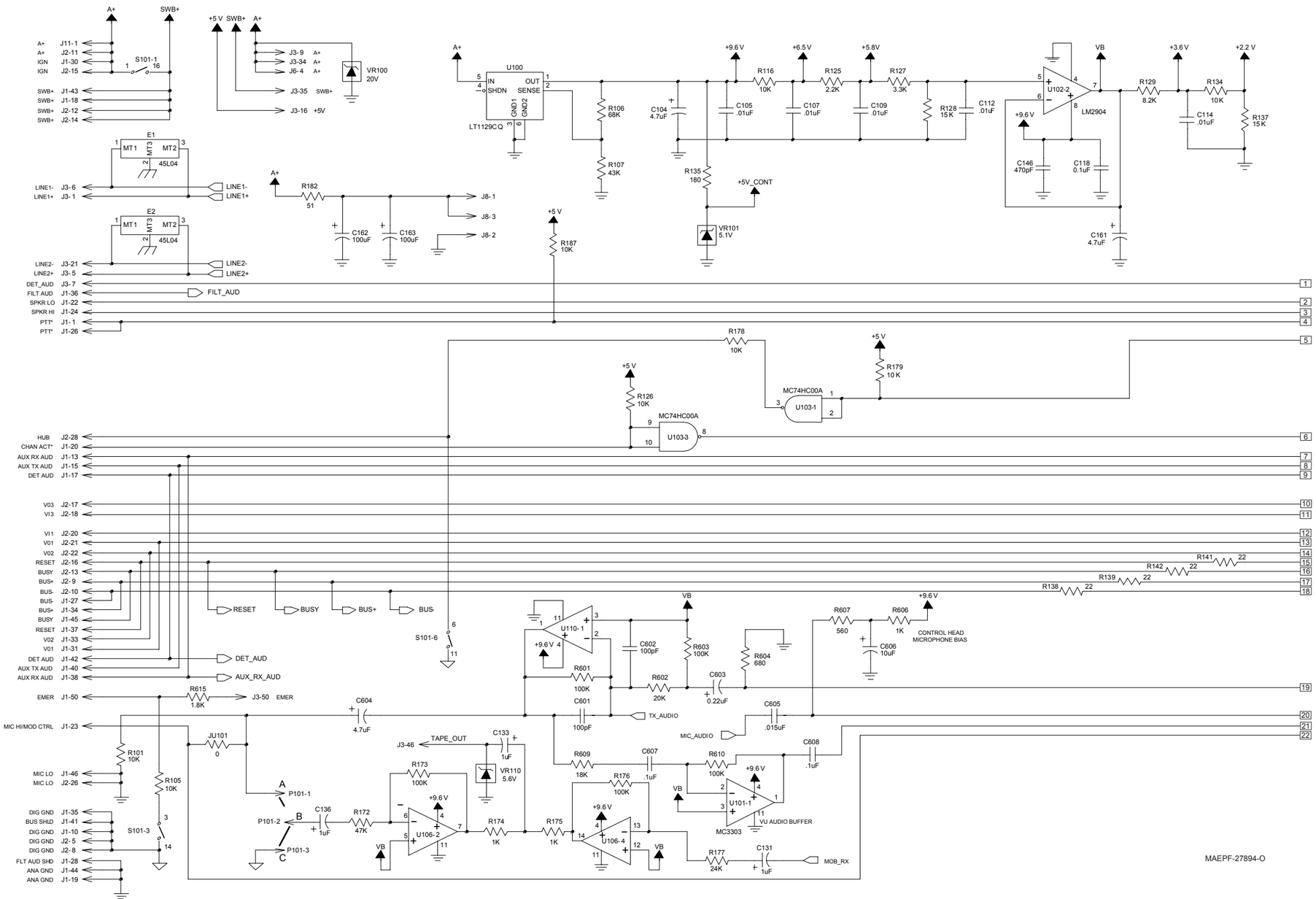

PLN1360C Tone Remote Control Board Schematic Diagram (Sheet 1 of 6)

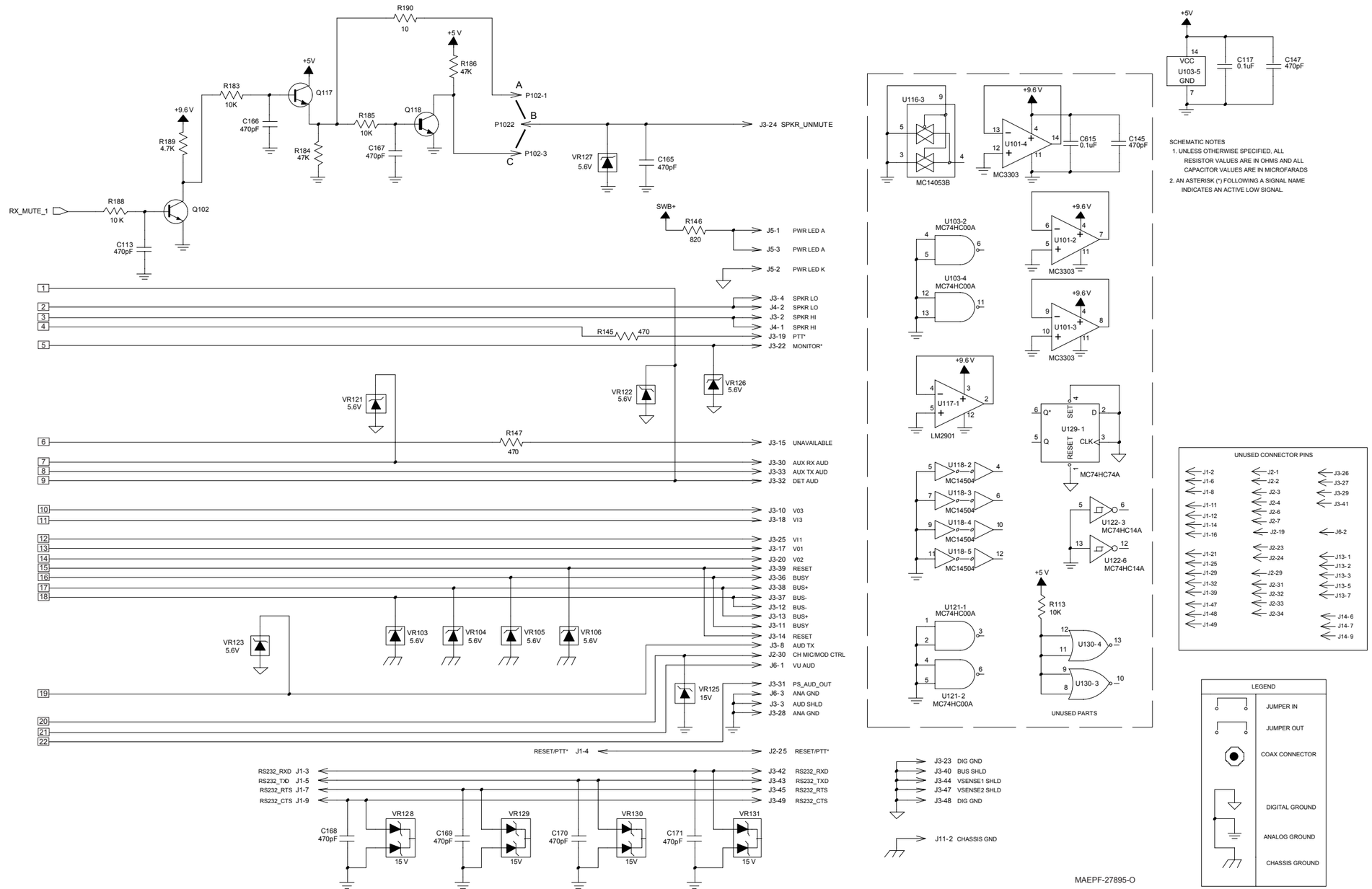

PLN1360C Tone Remote Control Board Schematic Diagram (Sheet 2 of 6)

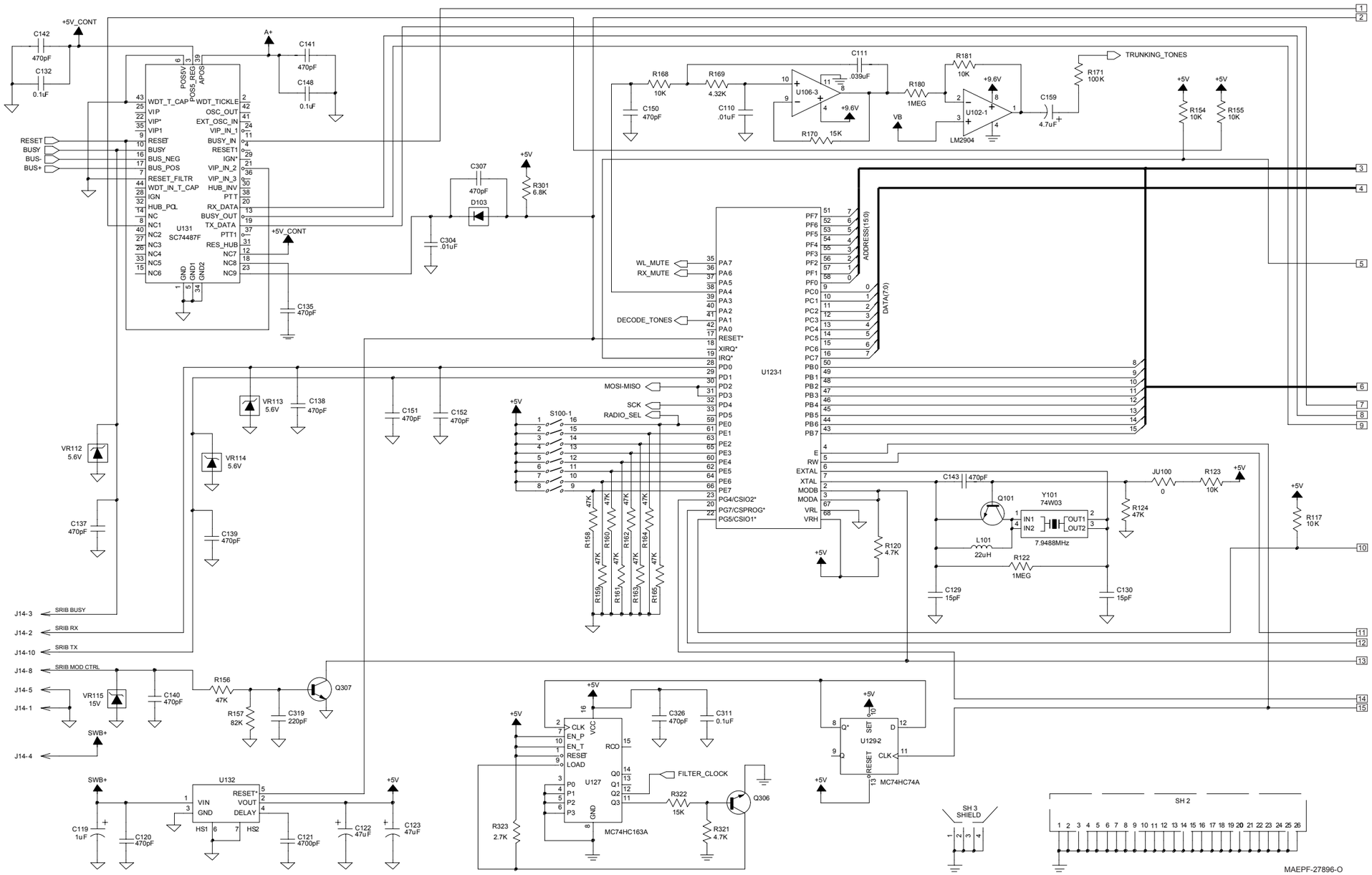

PLN1360C Tone Remote Control Board Schematic Diagram (Sheet 3 of 6)

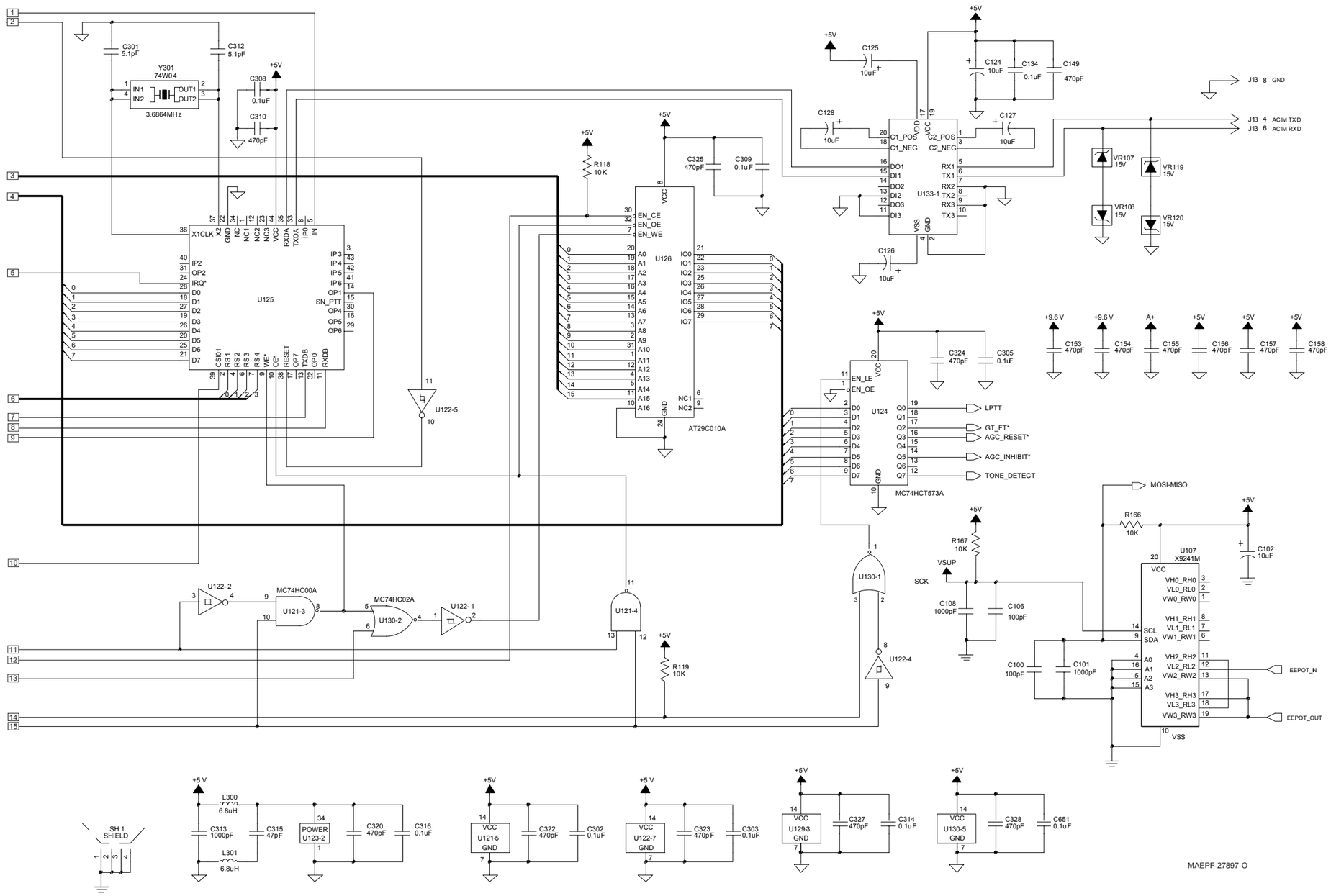

PLN1360C Tone Remote Control Board Schematic Diagram (Sheet 4 of 6)

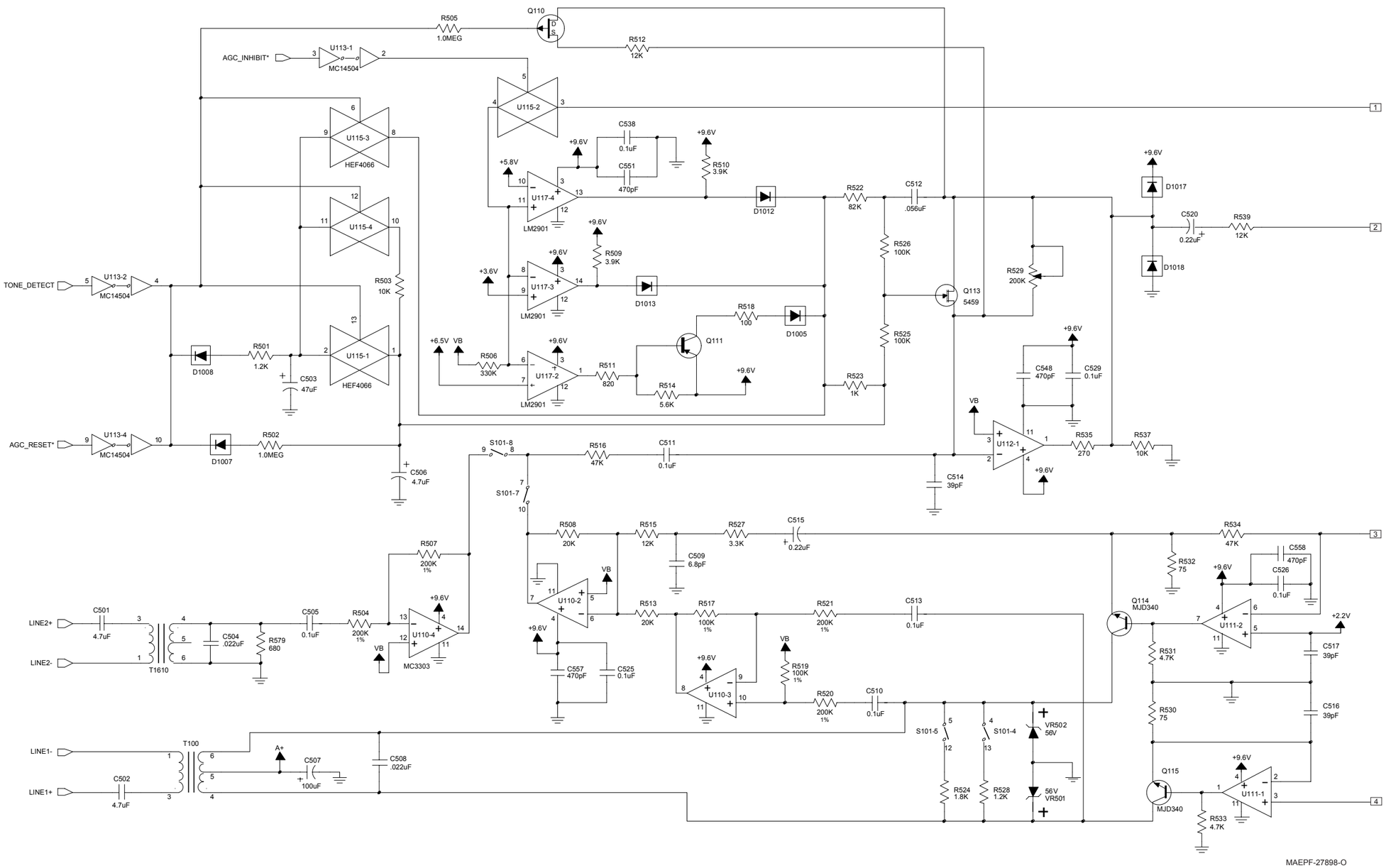

PLN1360C Tone Remote Control Board Schematic Diagram (Sheet 5 of 6)

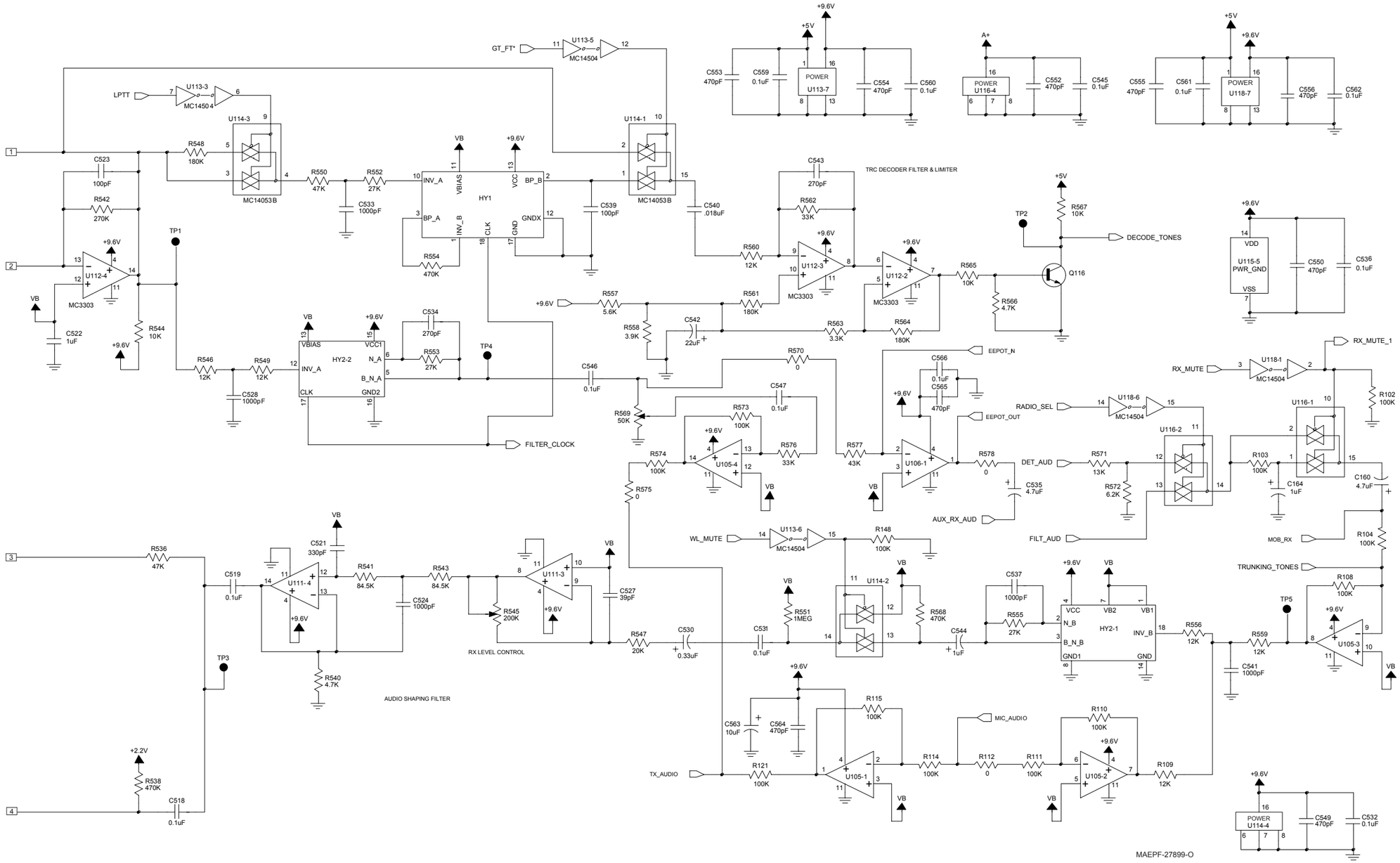

PLN1360C Tone Remote Control Board Schematic Diagram (Sheet 6 of 6)

PLN1360C Tone Remote Control Board Electrical Parts List

Ref. Des.	Part Number	Description
-	2605255S01	HT SINK
-	2605455Z04	SHLD 3 X 3.5 COVER
C100	2113740F51	CAP CHIP REEL CL1 +/-30 100
C101	2113741A21	CAP CHIP CL2 X7R REEL 1000
C102	2311049A19	CAP TANT CHIP 10 10 25 A/P
C104	2311049A14	CAP TANT CHIP 4.7 1020 A/P
C105	2113741A45	CAP CHIP CL2 X7R REEL 10000
C106	2113740F51	CAP CHIP REEL CL1 +/-30 100
C107	2113741A45	CAP CHIP CL2 X7R REEL 10000
C108	2113741A21	CAP CHIP CL2 X7R REEL 1000
C109	2113741A45	CAP CHIP CL2 X7R REEL 10000
C110	2113741F49	CAP CHIP CL2 X7R REEL 10000
C111	2113743K05	CER CHIP CAP .039UF
C112	2113741A45	CAP CHIP CL2 X7R REEL 10000
C113	2113741A13	CAP CHIP CL2 X7R REEL 470
C114	2113741A45	CAP CHIP CL2 X7R REEL 10000
C117	2113741B69	CAP CHIP CL2 X7R REEL 100000
C118	2113741B69	CAP CHIP CL2 X7R REEL 100000
C119	2311049A08	CAP TANT CHIP 1 10 35 A/P
C120	2113741A13	CAP CHIP CL2 X7R REEL 470
C121	2113741A37	CAP CHIP CL2 X7R REEL 4700
C122	2311049A23	CAP TANT CHIP 47 10 10
C123	2311049A23	CAP TANT CHIP 47 10 10
C124	2311049A19	CAP TANT CHIP 10 10 25 A/P
C125	2311049A19	CAP TANT CHIP 10 10 25 A/P
C126	2311049A19	CAP TANT CHIP 10 10 25 A/P
C127	2311049A19	CAP TANT CHIP 10 10 25 A/P
C128	2311049A19	CAP TANT CHIP 10 10 25 A/P
C129	2113740A33	CAP CHIP REEL CL1 +/-30 15
C130	2113740A33	CAP CHIP REEL CL1 +/-30 15
C131	2311049A08	CAP TANT CHIP 1 10 35 A/P

Ref. Des.	Part Number	Description
C132	2113741B69	CAP CHIP CL2 X7R REEL 100000
C133	2311049A08	CAP TANT CHIP 1 10 35 A/P
C134	2113741B69	CAP CHIP CL2 X7R REEL 100000
C135	2113741A13	CAP CHIP CL2 X7R REEL 470
C136	2311049A08	CAP TANT CHIP 1 10 35 A/P
C137	2113741A13	CAP CHIP CL2 X7R REEL 470
C138	2113741A13	CAP CHIP CL2 X7R REEL 470
C139	2113741A13	CAP CHIP CL2 X7R REEL 470
C140	2113741A13	CAP CHIP CL2 X7R REEL 470
C141	2113741A13	CAP CHIP CL2 X7R REEL 470
C142	2113741A13	CAP CHIP CL2 X7R REEL 470
C143	2113741A13	CAP CHIP CL2 X7R REEL 470
C145	2113741A13	CAP CHIP CL2 X7R REEL 470
C146	2113741A13	CAP CHIP CL2 X7R REEL 470
C147	2113741A13	CAP CHIP CL2 X7R REEL 470
C148	2113741B69	CAP CHIP CL2 X7R REEL 100000
C149	2113741A13	CAP CHIP CL2 X7R REEL 470
C150	2113741A13	CAP CHIP CL2 X7R REEL 470
C151	2113741A13	CAP CHIP CL2 X7R REEL 470
C152	2113741A13	CAP CHIP CL2 X7R REEL 470
C153	2113741A13	CAP CHIP CL2 X7R REEL 470
C154	2113741A13	CAP CHIP CL2 X7R REEL 470
C155	2113741A13	CAP CHIP CL2 X7R REEL 470
C156	2113741A13	CAP CHIP CL2 X7R REEL 470
C157	2113741A13	CAP CHIP CL2 X7R REEL 470
C158	2113741A13	CAP CHIP CL2 X7R REEL 470
C159	2311049A14	CAP TANT CHIP 4.7 1020 A/P
C160	2311049A14	CAP TANT CHIP 4.7 1020 A/P
C161	2311049A14	CAP TANT CHIP 4.7 1020 A/P
C162	2380090M25	CAP ALU 100UF 25V
C163	2380090M25	CAP ALU 100UF 25V
C164	2311049A07	CAP TANT CHIP 1 10 16 A/P
C165	2113741A13	CAP CHIP CL2 X7R REEL 470
C166	2113741A13	CAP CHIP CL2 X7R REEL 470
C167	2113741A13	CAP CHIP CL2 X7R REEL 470
C168	2113741A13	CAP CHIP CL2 X7R REEL 470
C169	2113741A13	CAP CHIP CL2 X7R REEL 470

Ref. Des.	Part Number	Description
C170	2113741A13	CAP CHIP CL2 X7R REEL 470
C171	2113741A13	CAP CHIP CL2 X7R REEL 470
C301	2113740A20	CAP CHIP REEL CL1 +/-30 5.1
C302	2113741B69	CAP CHIP CL2 X7R REEL 100000
C303	2113741B69	CAP CHIP CL2 X7R REEL 100000
C304	2113741A45	CAP CHIP CL2 X7R REEL 10000
C305	2113741B69	CAP CHIP CL2 X7R REEL 100000
C307	2113741A13	CAP CHIP CL2 X7R REEL 470
C308	2113741B69	CAP CHIP CL2 X7R REEL 100000
C309	2113741B69	CAP CHIP CL2 X7R REEL 100000
C310	2113741A13	CAP CHIP CL2 X7R REEL 470
C311	2113741B69	CAP CHIP CL2 X7R REEL 100000
C312	2113740A20	CAP CHIP REEL CL1 +/-30 5.1
C313	2113740A79	CAP CHIP REEL CL1 +/-30 1000
C314	2113741B69	CAP CHIP CL2 X7R REEL 100000
C315	2113740A46	CAP CHIP REEL CL1 +/-30 47
C316	2113741B69	CAP CHIP CL2 X7R REEL 100000
C319	2113740A63	CAP CHIP REEL CL1 +/-30 220
C320	2113741A13	CAP CHIP CL2 X7R REEL 470
C322	2113741A13	CAP CHIP CL2 X7R REEL 470
C323	2113741A13	CAP CHIP CL2 X7R REEL 470
C324	2113741A13	CAP CHIP CL2 X7R REEL 470
C325	2113741A13	CAP CHIP CL2 X7R REEL 470
C326	2113741A13	CAP CHIP CL2 X7R REEL 470
C327	2113741A13	CAP CHIP CL2 X7R REEL 470
C328	2113741A13	CAP CHIP CL2 X7R REEL 470
C501	2382174V01	CAP LYTIC 4.7UF 200V 20% N/PLR
C502	2382174V01	CAP LYTIC 4.7UF 200V 20% N/PLR
C503	2380090M07	CAP ALU 47 20 16.0V SURF MT

Ref. Des.	Part Number	Description
C504	2113741A53	CAP CHIP CL2 X7R REEL 22000
C505	2113741B69	CAP CHIP CL2 X7R REEL 100000
C506	2380090M22	CAP ALU 4.7 20 50V SURF MT
C507	2380090M25	CAP ALU 100UF 25V
C508	2113741A53	CAP CHIP CL2 X7R REEL 22000
C509	2113740A24	CAP CHIP REEL CL1 +/-30 6.8
C510	2113741B69	CAP CHIP CL2 X7R REEL 100000
C511	2113741B69	CAP CHIP CL2 X7R REEL 100000
C512	2113741B63	CAP CHIP CL2 X7R REEL 56000
C513	2113741B69	CAP CHIP CL2 X7R REEL 100000
C514	2113740A43	CAP CHIP REEL CL1 +/-30 39
C515	2311049A03	CAP TANT CHIP A/P .22 10 35
C516	2113740A43	CAP CHIP REEL CL1 +/-30 39
C517	2113740A43	CAP CHIP REEL CL1 +/-30 39
C518	2113741B69	CAP CHIP CL2 X7R REEL 100000
C519	2113741B69	CAP CHIP CL2 X7R REEL 100000
C520	2311049A03	CAP TANT CHIP A/P .22 10 35
C521	2113740A67	CAP CHIP REEL CL1 +/-30 330
C522	2113743G21	CER CHIP CAP 1.0 UF
C523	2113740A55	CAP CHIP REEL CL1 +/-30 100
C524	2113740A79	CAP CHIP REEL CL1 +/-30 1000
C525	2113741B69	CAP CHIP CL2 X7R REEL 100000
C526	2113741B69	CAP CHIP CL2 X7R REEL 100000
C527	2113740A43	CAP CHIP REEL CL1 +/-30 39
C528	2113740A79	CAP CHIP REEL CL1 +/-30 1000
C529	2113741B69	CAP CHIP CL2 X7R REEL 100000
C530	2311049A04	CAP TANT CHIP A/P .33 10 35
C531	2113741B69	CAP CHIP CL2 X7R REEL 100000

Ref. Des.	Part Number	Description
C532	2113741B69	CAP CHIP CL2 X7R REEL 100000
C533	2113740A79	CAP CHIP REEL CL1 +/-30 1000
C534	2113740A65	CAP CHIP REEL CL1 +/-30 270
C535	2311049A14	CAP TANT CHIP 4.7 1020 A/P
C536	2113741B69	CAP CHIP CL2 X7R REEL 100000
C537	2113740A79	CAP CHIP REEL CL1 +/-30 1000
C538	2113741B69	CAP CHIP CL2 X7R REEL 100000
C539	2113740A55	CAP CHIP REEL CL1 +/-30 100
C540	2113741A51	CAP CHIP CL2 X7R REEL 18000
C541	2113740A79	CAP CHIP REEL CL1 +/-30 1000
C542	2311049A21	CAP TANT CHIP 22 10 20 A/P
C543	2113740A65	CAP CHIP REEL CL1 +/-30 270
C544	2311049A07	CAP TANT CHIP 1 10 16 A/P
C545	2113741B69	CAP CHIP CL2 X7R REEL 100000
C546	2113741B69	CAP CHIP CL2 X7R REEL 100000
C547	2113741B69	CAP CHIP CL2 X7R REEL 100000
C548	2113741A13	CAP CHIP CL2 X7R REEL 470
C549	2113741A13	CAP CHIP CL2 X7R REEL 470
C550	2113741A13	CAP CHIP CL2 X7R REEL 470
C551	2113741A13	CAP CHIP CL2 X7R REEL 470
C552	2113741A13	CAP CHIP CL2 X7R REEL 470
C553	2113741A13	CAP CHIP CL2 X7R REEL 470
C554	2113741A13	CAP CHIP CL2 X7R REEL 470
C555	2113741A13	CAP CHIP CL2 X7R REEL 470
C556	2113741A13	CAP CHIP CL2 X7R REEL 470
C557	2113741A13	CAP CHIP CL2 X7R REEL 470
C558	2113741A13	CAP CHIP CL2 X7R REEL 470
C559	2113741B69	CAP CHIP CL2 X7R REEL 100000
C560	2113741B69	CAP CHIP CL2 X7R REEL 100000
C561	2113741B69	CAP CHIP CL2 X7R REEL 100000

Ref. Des.	Part Number	Description
C562	2113741B69	CAP CHIP CL2 X7R REEL 100000
C563	2311049A19	CAP TANT CHIP 10 10 25 A/P
C564	2113741A13	CAP CHIP CL2 X7R REEL 470
C565	2113741A13	CAP CHIP CL2 X7R REEL 470
C566	2113741B69	CAP CHIP CL2 X7R REEL 100000
C601	2113740A55	CAP CHIP REEL CL1 +/-30 100
C602	2113740A55	CAP CHIP REEL CL1 +/-30 100
C603	2311049A03	CAP TANT CHIP A/P .22 10 35
C604	2311049A14	CAP TANT CHIP 4.7 1020 A/P
C605	2113741A49	CAP CHIP CL2 X7R REEL 15000
C606	2311049A19	CAP TANT CHIP 10 10 25 A/P
C607	2113741B69	CAP CHIP CL2 X7R REEL 100000
C608	2113741B69	CAP CHIP CL2 X7R REEL 100000
C615	2113741B69	CAP CHIP CL2 X7R REEL 100000
C651	2113741B69	CAP CHIP CL2 X7R REEL 100000
D1005	4813833C10	DIODE GEN PUR 70V MMBD6050
D1007	4813833C10	DIODE GEN PUR 70V MMBD6050
D1008	4813833C10	DIODE GEN PUR 70V MMBD6050
D1012	4813833C10	DIODE GEN PUR 70V MMBD6050
D1013	4813833C10	DIODE GEN PUR 70V MMBD6050
D1017	4813833C10	DIODE GEN PUR 70V MMBD6050
D1018	4813833C10	DIODE GEN PUR 70V MMBD6050
D103	4813825A05	DIODE 30V HOT CARRIER MMBD301L
E1	8083545L04	SPKGAP 3P-4L1
E2	8083545L04	SPKGAP 3P-4L1
HY1	TFN6061A	HYBRID FLTR BANDPASS 2175
HY2	TFN6056A	HYBRID FLTR NOTCH 2175
J1	2882505T15	CONN HEADER 50 PIN

Ref. Des.	Part Number	Description
J11	2880004T02	HDR .156 FLK SNPB SR ST 2 POS
J13	0960113B01	JACK MOD. 8 PIN MT
J14	2880068M01	HEADER MIC
J2	2882505T04	PLUG HEADER 34 CKT
J3	2882505T15	CONN HEADER 50 PIN
J4	2884324M07	PLUG HDR 2.54MM GLD ST SR 2POS
J5	2884324M08	PLUG HDR 2.54MM GLD ST SR 3POS
J6	2884324M09	PLUG HDR 2.54MM GLD ST SR 4POS
J8	2884324M08	PLUG HDR 2.54MM GLD ST SR 3POS
JU100	0662057B47	CHIP RES 0 OHMS +-.050 OHMS
JU101	0662057B47	CHIP RES 0 OHMS +-.050 OHMS
L101	2480289M16	COIL IF 22UH 1611 CS 223
L300	2411087B36	COIL CHIP 6.8 UH 5 A/I
L301	2411087B36	COIL CHIP 6.8 UH 5 A/I
P101	2880001R03	CON PCB HDR .1 GLD SR ST 3 POS
P102	2880001R03	CON PCB HDR .1 GLD SR ST 3 POS
Q101	4813824A10	TSTR NPN 40V .2A GEN PURP
Q102	4813824A10	TSTR NPN 40V .2A GEN PURP
Q110	4813823A08	XSTR P-CH FET SW MMBFJ175LT1
Q111	4813824A18	XSTR PNP 40V .6A SW B=100
Q113	4884581T01	FET GENPUR N-CH _5459_ 6D SOT
Q114	4813822A07	TSTR NPN 300V .5A MJD340T4
Q115	4813822A07	TSTR NPN 300V .5A MJD340T4
Q116	4813824A10	TSTR NPN 40V .2A GEN PURP
Q117	4813824A10	TSTR NPN 40V .2A GEN PURP
Q118	4813824A10	TSTR NPN 40V .2A GEN PURP
Q306	4813824A10	TSTR NPN 40V .2A GEN PURP
Q307	4813824A10	TSTR NPN 40V .2A GEN PURP
R101	0662057A73	CHIP RES 10K OHMS 5%
R102	0662057A97	CHIP RES 100K OHMS 5%

Ref. Des.	Part Number	Description
R103	0662057A97	CHIP RES 100K OHMS 5%
R104	0662057A97	CHIP RES 100K OHMS 5%
R105	0662057A73	CHIP RES 10K OHMS 5%
R106	0660076A93	RES CHIP 68K 5 1/8
R107	0660076A88	RES CHIP 43K 5 1/8
R108	0662057A97	CHIP RES 100K OHMS 5%
R109	0662057A75	CHIP RES 12K OHMS 5%
R110	0662057A97	CHIP RES 100K OHMS 5%
R111	0662057A97	CHIP RES 100K OHMS 5%
R112	0662057B47	CHIP RES 0 OHMS +-.050 OHMS
R113	0662057A73	CHIP RES 10K OHMS 5%
R114	0662057A97	CHIP RES 100K OHMS 5%
R115	0662057A97	CHIP RES 100K OHMS 5%
R116	0662057A73	CHIP RES 10K OHMS 5%
R117	0662057A73	CHIP RES 10K OHMS 5%
R118	0662057A73	CHIP RES 10K OHMS 5%
R119	0662057A73	CHIP RES 10K OHMS 5%
R120	0660076A65	RES CHIP 4700 5 1/8
R121	0662057A97	CHIP RES 100K OHMS 5%
R122	0660079V49	RES CHIP 1.M OHM 5 1/8W 200PPM
R123	0662057A73	CHIP RES 10K OHMS 5%
R124	0662057A89	CHIP RES 47K OHMS 5%
R125	0660076A57	RES CHIP 2200 5 1/8
R126	0662057A73	CHIP RES 10K OHMS 5%
R127	0660076A61	RES CHIP 3300 5 1/8
R128	0660076A77	RES CHIP 15K 5 1/8
R129	0660076A71	RES CHIP 8200 5 1/8
R134	0662057A73	CHIP RES 10K OHMS 5%
R135	0611072A31	RES CHIP 180 5 1/4
R137	0660076A77	RES CHIP 15K 5 1/8
R138	0660076A09	RES CHIP 22 5 1/8
R139	0660076A09	RES CHIP 22 5 1/8
R140	0660076A09	RES CHIP 22 5 1/8
R141	0660076A09	RES CHIP 22 5 1/8
R145	0660076A41	RES CHIP 470 5 1/8
R146	0611072A47	RES CHIP 820 5 1/4
R147	0660076A41	RES CHIP 470 5 1/8

Ref. Des.	Part Number	Description
R148	0662057A97	CHIP RES 100K OHMS 5%
R154	0662057A73	CHIP RES 10K OHMS 5%
R155	0662057A73	CHIP RES 10K OHMS 5%
R156	0662057A89	CHIP RES 47K OHMS 5%
R157	0660076A95	RES CHIP 82K 5 1/8
R158	0662057A89	CHIP RES 47K OHMS 5%
R159	0662057A89	CHIP RES 47K OHMS 5%
R160	0662057A89	CHIP RES 47K OHMS 5%
R161	0662057A89	CHIP RES 47K OHMS 5%
R162	0662057A89	CHIP RES 47K OHMS 5%
R163	0662057A89	CHIP RES 47K OHMS 5%
R164	0662057A89	CHIP RES 47K OHMS 5%
R165	0662057A89	CHIP RES 47K OHMS 5%
R166	0662057A73	CHIP RES 10K OHMS 5%
R167	0662057A73	CHIP RES 10K OHMS 5%
R168	0660076E73	RES CHIP FILM 10K 1 1/8
R169	0662057R46	RES CHIP 4320 .1W 1%
R170	0660076E77	RES CHIP FILM 15K 1 1/8
R171	0662057A97	CHIP RES 100K OHMS 5%
R172	0662057A89	CHIP RES 47K OHMS 5%
R173	0662057A97	CHIP RES 100K OHMS 5%
R174	0662057A49	CHIP RES 1000 OHMS 5%
R175	0662057A49	CHIP RES 1000 OHMS 5%
R176	0662057A97	CHIP RES 100K OHMS 5%
R177	0662057A82	CHIP RES 24K OHMS 5%
R178	0662057A73	CHIP RES 10K OHMS 5%
R179	0662057A73	CHIP RES 10K OHMS 5%
R180	0662057B22	CHIP RES 1.0 MEG OHMS 5%
R181	0662057A73	CHIP RES 10K OHMS 5%
R182	0680194M18	RES 51 OHMS 5% 1W
R183	0662057A73	CHIP RES 10K OHMS 5%
R184	0662057A89	CHIP RES 47K OHMS 5%
R185	0662057A73	CHIP RES 10K OHMS 5%
R186	0662057A89	CHIP RES 47K OHMS 5%
R187	0662057A73	CHIP RES 10K OHMS 5%
R188	0662057A73	CHIP RES 10K OHMS 5%
R189	0662057A65	CHIP RES 4700 OHMS 5%
R190	0662057A01	CHIP RES 10 OHMS 5%
R301	0660076A69	RES CHIP 6800 5 1/8

Ref. Des.	Part Number	Description
R321	0662057A65	CHIP RES 4700 OHMS 5%
R322	0660076A77	RES CHIP 15K 5 1/8
R323	0660076A59	RES CHIP 2700 5 1/8
R501	0660076A51	RES CHIP 1200 5 1/8
R502	0660079V49	RES CHIP 1.M OHM 5 1/8W 200PPM
R503	0662057A73	CHIP RES 10K OHMS 5%
R504	0660079L33	RES CHIP 200. KOHM 11/8 200PPM
R505	0660079V49	RES CHIP 1.M OHM 5 1/8W 200PPM
R506	0660076B13	RES CHIP 330K 5 1/8
R507	0660079L33	RES CHIP 200. KOHM 11/8 200PPM
R508	0660076A80	RES CHIP 20K 5 1/8
R509	0660076A63	RES CHIP 3900 5 1/8
R510	0660076A63	RES CHIP 3900 5 1/8
R511	0660076A47	RES CHIP 820 5 1/8
R512	0662057A75	CHIP RES 12K OHMS 5%
R513	0660076A80	RES CHIP 20K 5 1/8
R514	0660076A67	RES CHIP 5600 5 1/8
R515	0662057A75	CHIP RES 12K OHMS 5%
R516	0662057A89	CHIP RES 47K OHMS 5%
R517	0660078L01	RES CHIP 100 KOHM 1 1/8 100PPM
R518	0660076A25	RES CHIP 100 5 1/8
R519	0660078L01	RES CHIP 100 KOHM 1 1/8 100PPM
R520	0660079L33	RES CHIP 200. KOHM 11/8 200PPM
R521	0660079L33	RES CHIP 200. KOHM 11/8 200PPM
R522	0660076A95	RES CHIP 82K 5 1/8
R523	0660076A49	RES CHIP 1000 5 1/8
R524	0660076A55	RES CHIP 1800 5 1/8
R525	0662057A97	CHIP RES 100K OHMS 5%
R526	0662057A97	CHIP RES 100K OHMS 5%
R527	0660076A61	RES CHIP 3300 5 1/8
R528	0660076A51	RES CHIP 1200 5 1/8
R529	1813905A14	POT 200K 20% SURF MT TOP ADJ

Ref. Des.	Part Number	Description
R530	0611072A22	RES CHIP 75 5 1/4
R531	0660076A65	RES CHIP 4700 5 1/8
R532	0611072A22	RES CHIP 75 5 1/4
R533	0660076A65	RES CHIP 4700 5 1/8
R534	0662057A89	CHIP RES 47K OHMS 5%
R535	0660076A35	RES CHIP 270 5 1/8
R536	0662057A89	CHIP RES 47K OHMS 5%
R537	0662057A73	CHIP RES 10K OHMS 5%
R538	0660076B17	RES CHIP 470K 5 1/8
R539	0662057A75	CHIP RES 12K OHMS 5%
R540	0660076A65	RES CHIP 4700 5 1/8
R541	0611077G81	RES CHIP 84.5K 1 1/8W
R542	0660076B11	RES CHIP 270K 5 1/8
R543	0611077G81	RES CHIP 84.5K 1 1/8W
R544	0662057A73	CHIP RES 10K OHMS 5%
R545	1813905A14	POT 200K 20% SURF MT TOP ADJ
R546	0662057A75	CHIP RES 12K OHMS 5%
R547	0660076A80	RES CHIP 20K 5 1/8
R548	0660076B07	RES CHIP 180K 5 1/8
R549	0662057A75	CHIP RES 12K OHMS 5%
R550	0662057A89	CHIP RES 47K OHMS 5%
R551	0660079V49	RES CHIP 1.M OHM 5 1/8W 200PPM
R552	0660076A83	RES CHIP 27K 5 1/8
R553	0660076A83	RES CHIP 27K 5 1/8
R554	0660076B17	RES CHIP 470K 5 1/8
R555	0660076A83	RES CHIP 27K 5 1/8
R556	0662057A75	CHIP RES 12K OHMS 5%
R557	0660076A67	RES CHIP 5600 5 1/8
R558	0660076A63	RES CHIP 3900 5 1/8
R559	0662057A75	CHIP RES 12K OHMS 5%
R560	0662057A75	CHIP RES 12K OHMS 5%
R561	0660076B07	RES CHIP 180K 5 1/8
R562	0662057A85	CHIP RES 33K OHMS 5%
R563	0660076A61	RES CHIP 3300 5 1/8
R564	0660076B07	RES CHIP 180K 5 1/8
R565	0662057A73	CHIP RES 10K OHMS 5%
R566	0660076A65	RES CHIP 4700 5 1/8

Ref. Des.	Part Number	Description
R567	0662057A73	CHIP RES 10K OHMS 5%
R568	0660076B17	RES CHIP 470K 5 1/8
R569	1885848F01	POT 50KOHM 20% SURF MT TOP ADJ
R570	0662057B47	CHIP RES 0 OHMS +-.050 OHMS
R571	0662057A73	CHIP RES 10K OHMS 5%
R572	0662057A68	CHIP RES 6200 OHMS 5%
R573	0662057A97	CHIP RES 100K OHMS 5%
R574	0662057A97	CHIP RES 100K OHMS 5%
R575	0662057B47	CHIP RES 0 OHMS +-.050 OHMS
R576	0662057A85	CHIP RES 33K OHMS 5%
R577	0662057A88	CHIP RES 43K OHMS 5%
R578	0662057B47	CHIP RES 0 OHMS +-.050 OHMS
R579	0662057A45	CHIP RES 680 OHMS 5%
R601	0662057A97	CHIP RES 100K OHMS 5%
R602	0660076A80	RES CHIP 20K 5 1/8
R603	0662057A97	CHIP RES 100K OHMS 5%
R604	0660076A45	RES CHIP 680 5 1/8
R606	0660076A49	RES CHIP 1000 5 1/8
R607	0660076A43	RES CHIP 560 5 1/8
R609	0660076A79	RES CHIP 18K 5 1/8
R610	0662057A97	CHIP RES 100K OHMS 5%
R615	0660076A55	RES CHIP 1800 5 1/8
S100	4083706T01	SWITCH DIP SURFACE MOUNT
S101	4083706T01	SWITCH DIP SURFACE MOUNT
SH1	2605425Z01	SHIELD
SH2	2605455Z03	SHLD 3 X 3.5
SH3	2605887Z01	SHLD BD
SKT1	0984728L01	SKT CONN
SKT2	0984728L01	SKT CONN
T100	2584422T01	XFMR LINE ISOLATION TELEPHONE
T1610	2584422T01	XFMR LINE ISOLATION TELEPHONE
U100	5105109Z13	IC MICRO PWR LOW DROPUT REGLTR

Ref. Des.	Part Number	Description
U101	5113819A04	IC QD OP AMP GEN PURP MC3303D
U102	5113818A01	IC LOW COST SING SPLY LM2904DR
U103	5113805A01	IC QUAD 2INP NAND 74HC00AD
U105	5113819A04	IC QD OP AMP GEN PURP MC3303D
U106	5113819A04	IC QD OP AMP GEN PURP MC3303D
U107	5105109Z14	IC QUAD PROG POT
U110	5113819A04	IC QD OP AMP GEN PURP MC3303D
U111	5113819A04	IC QD OP AMP GEN PURP MC3303D
U112	5113819A04	IC QD OP AMP GEN PURP MC3303D
U113	5184704M90	IC CMOS 04M90 LEVEL SHIFTER
U114	5184704M60	IC CMOS 04M60 ANALOG
U115	5185956E80	IC CMOS 04M52 QUAD SW
U116	5184704M60	IC CMOS 04M60 ANALOG
U117	5113820A03	IC QUAD SING/DUAL SPLY LM2901
U118	5184704M90	IC CMOS 04M90 LEVEL SHIFTER
U121	5113805A01	IC QUAD 2INP NAND 74HC00AD
U122	5113805A09	IC INV HEX SCHMITT TRIG HC14
U123	5113802A27	IC 68HC11 W.SCI SPI A/D
U124	5113805A91	IC LATCH-TRANSP.OCT 3-ST N-INV
U125	5105625U57	DUART IC
U126	5105625U79	IC 128KX8 FLASH ROM
U127	5113805A41	IC CTR BINP SYNC RST 74HC163D
U129	5113805A18	IC DUAL D FF W/SET RST 74HC74
U130	5113805A02	IC QUAD 2INP NOR 74HC02AD
U131	5180057S04	“IC CUST SER I/O 13”” REEL”
U132	5185130C06	IC 5V REG W/RESET CS-8126-1T5

Ref. Des.	Part Number	Description
U133	5113811A11	IC RS-232-C DVR/RCVR SNGL SUP
VR100	4880140L25	DIODE SOT ZENER 20V TAPE&REEL
VR101	4880140L06	DIODE SOT ZENER 5.1V TAPE&REEL
VR103	4880140L07	DIODE SOT ZENER 5.6V TAPE&REEL
VR104	4880140L07	DIODE SOT ZENER 5.6V TAPE&REEL
VR105	4880140L07	DIODE SOT ZENER 5.6V TAPE&REEL
VR106	4880140L07	DIODE SOT ZENER 5.6V TAPE&REEL
VR107	4880140L20	DIODE SOT ZENER 15V TAPE&REEL
VR108	4880140L20	DIODE SOT ZENER 15V TAPE&REEL
VR110	4880140L07	DIODE SOT ZENER 5.6V TAPE&REEL
VR112	4880140L07	DIODE SOT ZENER 5.6V TAPE&REEL
VR113	4880140L07	DIODE SOT ZENER 5.6V TAPE&REEL
VR114	4880140L07	DIODE SOT ZENER 5.6V TAPE&REEL
VR115	4880140L20	DIODE SOT ZENER 15V TAPE&REEL
VR119	4880140L20	DIODE SOT ZENER 15V TAPE&REEL
VR120	4880140L20	DIODE SOT ZENER 15V TAPE&REEL
VR121	4880140L07	DIODE SOT ZENER 5.6V TAPE&REEL
VR122	4880140L07	DIODE SOT ZENER 5.6V TAPE&REEL
VR123	4880140L07	DIODE SOT ZENER 5.6V TAPE&REEL
VR125	4880140L20	DIODE SOT ZENER 15V TAPE&REEL
VR126	4880140L07	DIODE SOT ZENER 5.6V TAPE&REEL
VR127	4880140L07	DIODE SOT ZENER 5.6V TAPE&REEL
VR128	4813832C28	ZENER BPLR 15V FOR ESD SOT23

Ref. Des.	Part Number	Description
VR129	4813832C28	ZENER BPLR 15V FOR ESD SOT23
VR130	4813832C28	ZENER BPLR 15V FOR ESD SOT23
VR131	4813832C28	ZENER BPLR 15V FOR ESD SOT23
VR501	4813832A46	DIODE 56V TRANS SUP P6SMB
VR502	4813832A46	DIODE 56V TRANS SUP P6SMB
Y101	4805574W03	XTAL PRL RESONANCE 7.9488MHZ
Y301	4805574W04	XTAL SURFACE MOUNT

Notes

Appendix A - Cross Patch Configuration

A

General Description

The Cross Patch provides interoperability between two systems on different bands, analog or digital or trunking. An interface cable can be built to allow the interconnection of two ASTRO Spectra/Spectra Plus Consolette stations to form a repeater system. The information received by Consolette 1 will be retransmitted or repeated by Consolette 2. Similarly, information received by Consolette 2 will be retransmitted on Consolette 1. The system is a first come, first served system in that one station does not have priority over the other. Moreover, the Consolettes must be located in different frequency bands to prevent RF interference from occurring from one Consolette to another.

Detailed Description

To enable Cross Patch operation between two Consolettes, build the cable shown in the Cross Patch Cable diagram below and connect each dB-25 connector to Accessory Connector 2 of the two Consolettes. If you wish to have the option of enabling/disabling Cross Patch operation, you must include an in-line switch (or switches) to open and close the connection between SPKR_UNMUTE and PTT, along with the connection between RX+(LINE1+)† and TX_AUD(AUD_TX)†. To disable the Cross Patch, the connection between SPKR_UNMUTE and PTT must be open. This will prevent the Consolette that is receiving information from keying the Consolette it is connected to. In addition, the connection between RX+(LINE1+)† and TX_AUD(AUD_TX)† must also be switched open to prevent received audio from one Consolette unintentionally mixing into the connected Consolette's microphone audio.

The PTT for Consolette 2 is derived from the SPKR_UMUTE signal of Consolette 1 which is active when Consolette 1 is receiving information. RX audio from Consolette 1 is routed to the TX Audio of Consolette 2. Adjusting the potentiometer (R111 on AIB, R545 on TRC) on the RX Audio path of Consolette 1 will enable the user to match the transmitter audio input sensitivity of Consolette 2. The behavior of the audio path from Consolette 2 to Consolette 1 is identical to the Consolette 1 to Consolette 2 path just described.

NOTE: In this configuration, the SPKR_UNMUTE jumper (J15 on AIB, P102 on TRC) should be placed for active low operation. (See Table 2 on page 9 for AIB and Table 6 on page 11 for TRC jumper location.)

Cross Patch Cable

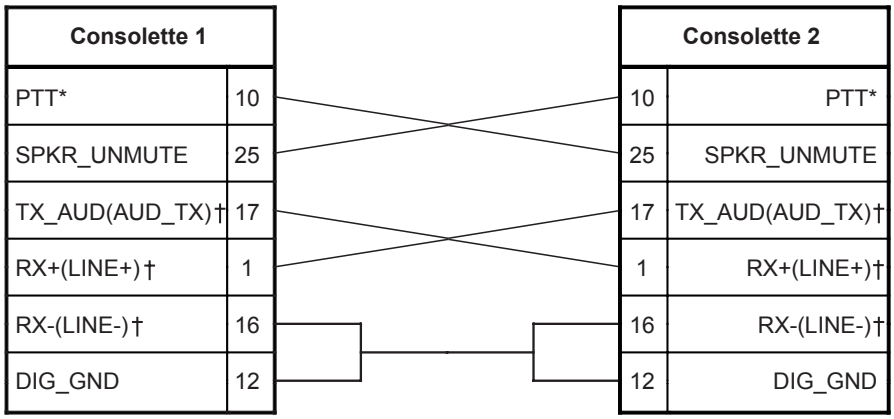

Notes: ** Denotes active low signal*
† Denotes TRC signal name

Level Settings

Consolette 1 to Consolette 2 Path

1. Connect Consolette 1 to Consolette 2 via the cable described above.
2. Connect a signal generator or communications analyzer to Consolette 1.
3. Connect Consolette 2 to a modulation analyzer or communications analyzer. Set the analyzer up to measure deviation level.
4. Apply a –47 dBm on channel RF signal modulated with a 1 kHz tone at 60% FSD into Consolette 1. Consolette 1 will now be receiving and Consolette 2 will be transmitting.
5. Adjust the RX Audio path potentiometer (R111 on AIB, R545 on TRC) on Consolette 1 until 60% FSD is obtained on the Consolette 2 modulation analyzer or communications analyzer.
6. Turn off the –47 dBm RF signal.

Consolette 2 to Consolette 1 Path

1. Connect Consolette 2 to Consolette 1 via the cable described above.
2. Connect a signal generator or communications analyzer to Consolette 2.
3. Connect Consolette 1 to a modulation analyzer or communications analyzer. Set the analyzer up to measure deviation level.
4. Apply a –47 dBm on channel RF signal modulated with a 1 kHz tone at 60% FSD into Consolette 2. Consolette 2 will now be receiving and Consolette 1 will be transmitting.
5. Adjust the RX Audio path potentiometer (R111 on AIB, R545 on TRC) on Consolette 2 until 60% FSD is obtained on the Consolette 1 modulation analyzer or communications analyzer.
6. Turn off the –47 dBm RF signal.

Radio-Wide Changes Using CPS

The Cross Patch uses the SPKR_UNMUTE signal from Consolette 1 as a PTT signal to PTT Consolette 2. Furthermore, the SPKR_UNMUTE signal is derived from voltage changes on the speaker leads. The speaker voltage changes if voice audio is present or if alert tones are present. Therefore, **all the Alert Tones should be turned OFF** using CPS. This will prevent unintended mobile PTTs. For example, if TX Clear Alert Tones are enabled, when Consolette 1 receives a signal, it PTTs Consolette 2. This sends an alert tone to Consolette 2's speaker, which then causes Consolette 1 to transmit, etc., causing cyclical keying and unkeying of both Consolettes.

To disable the Alert Tones, disable the following fields in ASTRO Spectra or ASTRO Spectra Plus CPS:

1. Radio Configuration Radio Wide → Alert Tones
   - Alert Tones Disabled
   - Power Up Self Test Alert Tone Disabled
2. Radio Configuration → Secure → Secure Configuration → Advanced

   NOTE: These fields will be active only if the “Secure Hardware Equipped” field is enabled in the Radio Configuration → Secure → Secure Configuration → General section.

   - Tx Clear Alert Tones Disabled
   - Periodic Keyfail Alert Tone Disabled

Caution	When using the Cross Patch, you may exceed the duty cycle rating of the Consolette. If this condition is expected, the customer may want to reduce the RF power output of the Consolette.

Audio Degradation Issues

The Consolette Cross Patch Interface is a base band audio interface that can be used to interconnect the following:

- Analog to Analog systems
- Digital to Analog systems
- Analog to Digital systems
- Digital to Digital systems

Analog to analog patch systems should experience no audio degradation since there are no vocoders in the system. The audio will not be degraded in the digital to analog or analog to digital patches since the voice audio is only vocoded once. The digital to digital patches will experience degraded audio. The repeated voice will not be as intelligible as the original digital audio. The voice audio that passes through the patch is vocoded twice, and therefore isn't quite as sharp as the original. The small artifacts of the first vocoding are amplified and added to by the second vocoding. The net result is voice that isn't as intelligible as the high quality first vocoding. The voice has some audio aberrations, but mainly it's harder to understand what is being said. The degree of intelligibility loss varies with the type of vocoder. Field experience has shown that VSELP is affected more than IMBE, but both are degraded from the original message.

Notes

Appendix B - Replacement Parts Ordering

B

Basic Ordering Information

When ordering replacement parts or equipment information, the complete identification number should be included. This applies to all components, kits, and chassis. If the component part number is not known, the order should include the number of the chassis or kit of which it is a part, and sufficient description of the desired component to identify it.

Crystal orders should specify the crystal type number, crystal and carrier frequency, and the model number in which the part is used.

Transceiver Board and VOCON Board Ordering Information

When ordering a replacement Transceiver Board or VOCON Board, refer to the applicable Model Chart in the front of this manual, read the Transceiver Board or VOCON Board note, and include the proper information with your order.

Motorola Online

Motorola Online users can access our online catalog at

https://www.motorola.com/businessonline

To register for online access, please call 800-814-0601 (for U.S. and Canada Service Centers only). International customers can obtain assistance at https://businessonline.motorola.com.

Mail Orders

Send written orders to the following addresses:

Replacement Parts/ Test Equipment/Manuals/ Crystal Service Items (United States and Canada)**:**

Motorola Inc.
Radio Products and Services Division*
Attention: Order Processing
1307 E. Algonquin Road
Schaumburg, IL 60196
U.S.A.

Federal Government Orders:

Motorola Inc.
U.S. Federal Government Markets Division
Attention: Order Processing
7230 Parkway Drive
Landover, MD 21076
U.S.A.

International Orders:

Motorola Inc.
Radio Products and Services Division*
(United States and Canada)
Attention: Order Processing
1307 E. Algonquin Road
Schaumburg, IL 60196
U.S.A.

* The Radio Products and Services Division (RPSD) was formerly known as the Customer Care and Services Division (CCSD) and/or the Accessories and Aftermarket Division (AAD).

Telephone Orders

Radio Products and Services Division*
(United States and Canada)
7:00 AM to 7:00 PM (Central Standard Time)
Monday through Friday (Chicago, U.S.A.)
1-800-422-4210
(International Orders)
1-847-538-8023

U.S. Federal Government Markets Division (USFGMD)
1-800-826-1913 Federal Government Parts - Credit Cards Only
8:30 AM to 5:00 PM (Eastern Standard Time)

Fax Orders

Radio Products and Services Division*
(United States and Canada)
1-800-622-6210
(International)
1-847-576-3023

USFGMD
(Federal Government Orders)
1-800-526-8641 (For Parts and Equipment Purchase Orders)

Parts Identification

Radio Products and Services Division*
(United States and Canada)
1-800-422-4210, menu 3

Product Customer Service

Customer Response Center
(Non-technical Issues)
1-800-247-2346
FAX:1-800-247-2347

* The Radio Products and Services Division (RPSD) was formerly known as the Customer Care and Services Division (CCSD) and/or the Accessories and Aftermarket Division (AAD).

Motorola, Inc.
8000 West Sunrise Boulevard
Ft. Lauderdale, FL 33322

6881086C22-B