DOOR/REAR DECK SPEAKER

KFC-166X

SERVICE MANUAL

KENWOOD

©1996-1 PRINTED IN JAPAN
B51-6950-00 (MC) 291

EXTERNAL VIEW

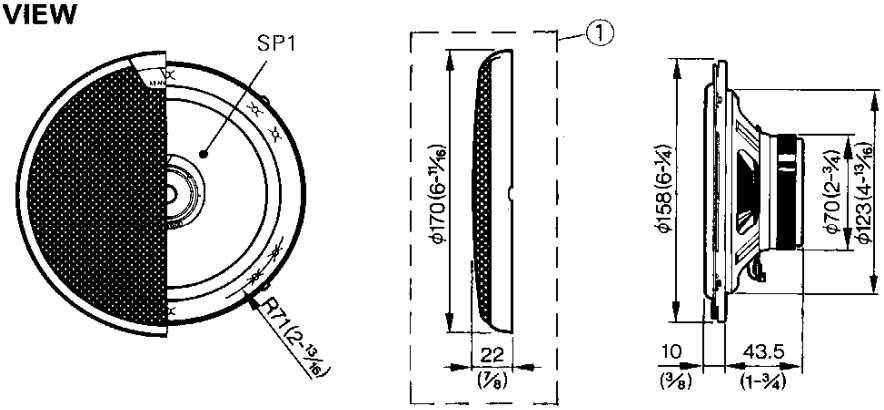

Unit: mm (inch)

PARTS INCLUDED

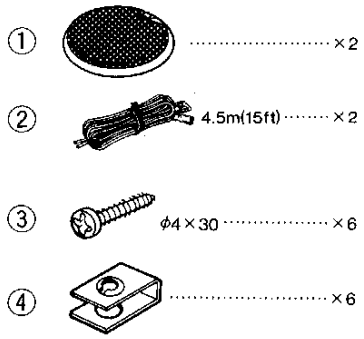

PARTS LIST

★ New parts
Parts without **Parts No.** are not supplied.
Les articles non mentionnés dans le **Parts No.** ne sont pas fournis.
Teile ohne **Parts No.** werden nicht geliefert.

Ref No.	New Parts	Parts No.	Description
①		B06-0975-08	Grille ass'y
②		E30-5283-08	Speaker cord
③, ④		N99-1086-18	Screw set
SP1	★	T15-0326-08	Speaker

SPECIFICATIONS

Speakers
- Woofer — 158mm(6in) Water Resistant Cone Type 160g(5.5oz) Magnet
- Tweeter — 35mm(1-3/8in) Balanced Dome Type

Peak Power — 80 Watts
Frequency Response — 45Hz~20,000Hz
Sensitivity — 91dB/W at 1m
Impedance — 4 Ohms
Net Weight With Grille — 1,200g(2.6lb)/Pair

Note:

KENWOOD CORPORATION
14-6, Dogenzaka 1-chome, Shibuya-ku, Tokyo, 150 Japan
KENWOOD SERVICE CORPORATION
P.O. BOX 22745, 2201 East Dominguez St., Long Beach, CA 90801-5745 U.S.A.
KENWOOD ELECTRONICS CANADA INC.
6070 Kestrel Road, Mississauga, Ontario, Canada L5T 1S8
KENWOOD ELECTRONICS LATIN AMERICA S.A.
P.O. BOX 55-2791, Piso 8 Plaza Chase, Cl 47 y Aquilino de la Guardia, Panama, Republic de Panama
TRIO-KENWOOD U.K. LIMITED
KENWOOD House, Dwight Road, Watford, Herts, WD1 8ES United Kingdom
KENWOOD ELECTRONICS BENELUX N.V.
Mechelsesteenweg 418 B-1930 Zaventem, Belgium
KENWOOD ELECTRONICS DEUTSCHLAND GMBH
Rembrücker Str. 15, 63150 Heusenstamm, Germany
TRIO-KENWOOD FRANCE S.A.
13 Boulevard Ney, 75018 Paris, France
KENWOOD ELECTRONICS ITALIA S.p.A.
Via G. Sirtori 7/9, 20129 Milano, Italy
KENWOOD IBÉRICA S.A.
Bolivia, 239-08020 Barcelona, Spain
KENWOOD ELECTRONICS AUSTRALIA PTY. LTD. (A.C.N. 001 499 074)
P.O. BOX 604, 8 Figtree Drive, Australia Centre, Homebush, N.S.W. 2140, Australia
KENWOOD & LEE ELECTRONICS, LTD.
Unit 3712-3724, Level 37 Tower 1, Metroplaza, 223 Hing Fong Road, Kwai Fong N.T. Hong Kong