INSTALLATION MANUAL

Ceiling And Floor Type

Thank you very much for purchasing our air conditioner,
Before using your air conditioner , please read this manual carefully and keep it for future reference.

CONTENTS PAGE

PRECAUTIONS.....1
INSTALLATION INFORMATION.....2
ATTACHED FITTINGS.....3
INSPECTING AND HANDLING THE UNIT.....4
INDOOR UNIT INSTALLATION.....4
OUTDOOR UNIT INSTALLATION.....5
INSTALL THE CONNECTING PIPE.....9
CONNECT THE DRAIN PIPE.....11
WIRING.....12
TEST OPERATION.....13

1. PRECAUTIONS

- **keep this manual where the operator can easily find them.**
- **Read this manual attentively before starting up the units.**
- **For safety reason the operator must read the following cautions carefully.**
- **Installation must be performed in accordance with the requirement of NEC and CEC by authorized personnel only.**

The safty precautions listed here are divided into two categories.

WARNING

If you do not follow these instrutions exactly, the unit may cause property damage, personal injury or loss of life.

CAUTION

If you do not follow these instrutions exactly, the unit may cause minor or moderate property damage, personal injury.

After completing the installation, make sure that the unit operates properly during the start-up operation. Please instruct the customer on how to operate the unit and keep it maintained.Also, inform customers that they should store this installation manual along with the owner's manual for future reference.

WARNING

Be sure only trained and qualified service personnel to install, repair or service the equipment.

Improper installation, repair, and maintenance may result in electric shocks, short-circuit, leaks, fire or other damage to the equipment.

Install according to this installation instructions strictly.
If installation is defective, it will cause water leakage, electrical shock and fire.

When installing the unit in a small room, take measures against to keep refrigerant concentration from exceeding allowable safety limits in the event of refrigerant leakage.
Contact the place of purchase for more information. Excessive refrigerant in a closed ambient can lead to oxygen deficiency.

Use the attached accessories parts and specified parts for installation.
otherwise, it will cause the set to fall, water leakage, electrical shock and fire.

Install at a strong and firm location which is able to withstand the set' s weight.
If the strength is not enough or installation is not properly done, the set will drop to cause injury.

The appliance shall not be installed in the laundry.

Before obtaining access to terminals, all supply circuits must be disconnected.

The appliance must be positioned so that the plug is accessible.

The enclosure of the appliance shall be marked by word, or by symbols, with the direction of the fluid flow.

For electrical work, follow the local national wiring standard, regulation and this installation instructions. An independent circuit and single outlet must be used.
If electrical circuit capacity is not enough or defect in electrical work, it will cause electrical shock fire.

Use the specified cable and connect tightly and clamp the cable so that no external force will be acted on the terminal.
If connection or fixing is not perfect, it will cause heat-up or fire at the connection.

Wiring routing must be properly arranged so that control board cover is fixed properly.
If control board cover is not fixed perfectly, it will cause heat-up at connection point of terminal, fire or electrical shock.

If the supply cord is damaged, it must be replaced by the manufacturer or its service agent or a similarly qualified person in order to avoid a hazard.

An all-pole disconnection switch having a contact separation of at least 3mm in all poles should be connected in fixed wiring.

When carrying out piping connection, take care not to let air substances go into refrigeration cycle.
Otherwise, it will cause lower capacity, abnormal high pressure in the refrigeration cycle, explosion and injury.

Do not modify the length of the power supply cord or use of extension cord, and do not share the single outlet with other electrical appliances.
Otherwise, it will cause fire or electrical shock.

Carry out the specified installation work after taking into account strong winds, typhoons or earthquakes.
Improper installation work may result in the equipment falling and causing accidents.

If the refrigerant leaks during installation, ventilate the area immediately.
Toxic gas may be produced if the refrigerant comes into the place contacting with fire.

The temperature of refrigerant circuit will be high, please keep the interconnection cable away from the copper tube.

After completing the installation work, check that the refrigerant does not leak.
Toxic gas may be produced if the refrigerant leaks into the room and comes into contact with a source of fire, such as a fan heater, stove or cooker.

CAUTION

Ground the air conditioner.
Do not connect the ground wire to gas or water pipes, lightning rod or a telephone ground wire.Inappropriate grounding may result in electric shocks.

Be sure to install an earth leakage breaker.
Failure to install an earth leakage breaker may result in electric shocks.

Connect the outdoor unit wires , then connect the indoor unit wires.
You are not allowed to connect the air conditioner with the power supply until the wiring and piping is done.

While following the instructions in this installation manual, install drain piping in order to ensure proper drainage and insulate piping in order to prevent condensation.
Improper drain piping may result in water leakage and property damage.

Install the indoor and outdoor units, power supply wiring and connecting wires should be at least 1 meter away from televisions or radios in order to prevent image interference or noise.
Depending on the radio waves, a distance of 1 meter may not be sufficient enough to eliminate the noise.

The appliance is not intended for use by young children or infirm persons without supervision.

Don't install the air conditioner in the following circumstance:

- There is petrolatum existing.
- There is salty air surrounding (near the coast).
- There is caustic gas (the sulfide, for example) existing in the air (near a hot spring).
- The Volt vibrates violently (in the factories).
- In buses or cabinets.
- In kitchen where it is full of oil gas.
- There is strong electromagnetic wave existing.
- There are inflammable materials or gas.
- There is acid or alkaline liquid evaporating.
- Other special conditions.

The appliance shall be installed in accordance with national wiring regulations.

Do not operate your air conditioner in a wet room such as a bathroom or laundry room.

An all-pole disconnection device which has at least 3mm clearances in all poles , and have a leakage current that may exceed 10mA, the residual current device (RCD) having a rated residual operating current not exceeding 30mA, and disconnection must be incorporated in the fixed wiring in accordance with the wiring rules.

2. INSTALLATION INFORMATION

- **To install properly, please read this "installation manual" at first.**
- **The air conditioner must be installed by qualified persons.**
- **When installing the indoor unit or its tubing, please follow this manual as strictly as possible.**
- **If the air conditioner is installed on a metal part of the building, it must be electrically insulated according to the relevant standards to electrical appliances.**
- **When all the installation work is finished, please turn on the power only after a thorough check.**
- **Regret for no further announcement if there is any change of this manual caused by product improvement.**

INSTALLATION ORDER

- Select the location;
- Install the indoor unit;
- Install the outdoor unit;
- Install the connecting pipe ;
- Connect the drain pipe;
- Wiring;
- Test operation.

3. ATTACHED FITTINGS

Please check whether the following fittings are of full scope. If there are some spare fittings , please restore them carefully.

	NAME	SHAPE	QUANTITY
Remote controller & Its Holder	1. Remote controller (on some models)		1
	2. Remote controller holder (on some models)		1
	3. Mounting screw(ST2.9×10-C-H)		2
	4. Alkaline dry batteries (AM4)		2
Others	5. Owner's manual	————	1
	6. Installation manual	————	1
	7. Remote controller manual	————	1

4. INSPECTING AND HANDLING THE UNIT

At delivery, the package should be checked and any damage should be reported immediately to the the service agent.

When handling the unit, take into account the following:

1 Fragile, handle the unit with care.

Keep the unit upright in order to avoid compressor damage.

2 Choose on before hand the path along which the unit is to be brought in.

3 Move this unit as originally package as possible.

4 When lifting the unit , always use protectors to prevent belt damage and pay attention to the position of the unit's centre of gravity.

5. INDOOR UNIT INSTALLATION

5.1 Installation place

(Refer to Fig.5-1,Fig.5-2 and Table 5-1 for specification.)

The indoor unit should be installed in a location that meets the following requirements:

- There is enough room for installation and maintenance.
- The ceiling is horizontal, and its structure can endure the weight of the indoor unit.
- The outlet and the inlet are not impeded, and the influence of external air is the least.
- The air flow can reach throughout the room.
- The connecting pipe and drainpipe could be extracted out easily.
- There is no direct radiation from heaters.

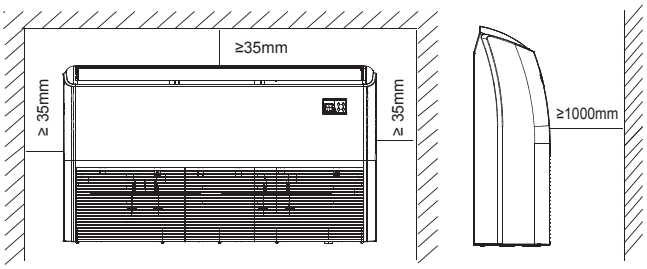

Fig.5-1

CAUTION

Keep indoor unit, outdoor unit, power supply wiring and transmission wiring at least 1 meter away from televisions and radios. This is to prevent image interference and noise in those electrical appliances. (Noise may be generated depending on the conditions under which the electric wave is generated, even if 1 meter is kept.)

5.2 Install the main body

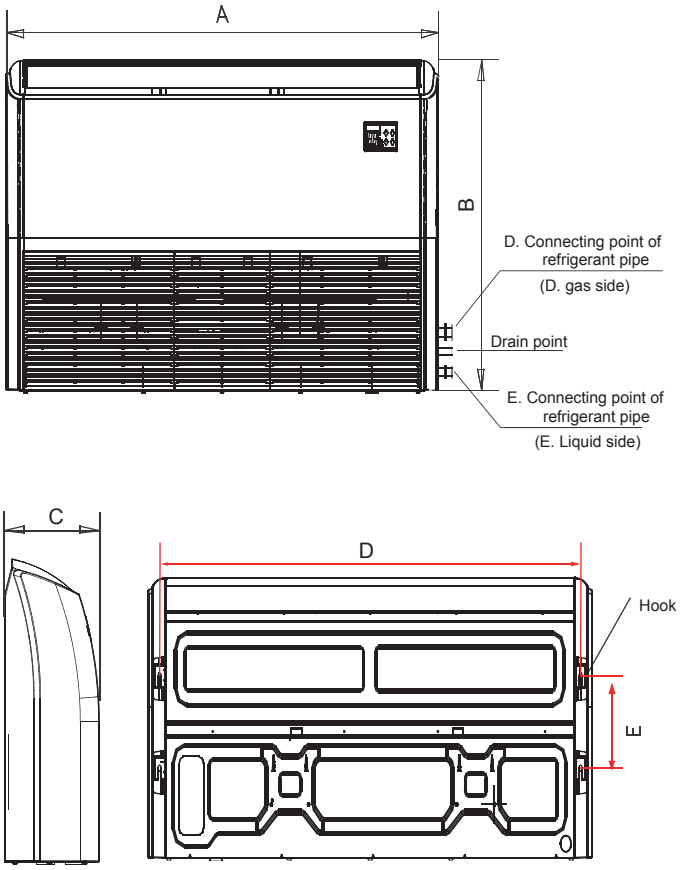

Fig. 5-2

1 Installing Ø10 hanging screw bolts. (4 bolts)

- Please *Refer to Fig.5-3* and *Fig.5-4* for the hanging screw bolts distance
- Evaluate the ceiling construction and please install with Ø10 hanging screw bolts.
- The handling to the ceiling varies from the constructions, consult the construction person for the specific condition.
  - Do keep the ceiling flat. Consolidate the roof beam to avoid possible vibration.
  - Cut off the roof beam.
  - Strengthen the place that has been cut off, and consolidatethe roof beam.
- After the selection of installation location, position the refrigerant pipes, drain pipes,indoor & outdoor wires to the connection places before hanging up the machine.
- The installation of hanging screw bolts.

WOODEN CONSTRUCTION

Put the square timber traversely overthe roof beam, then install the hanging screw bolts.

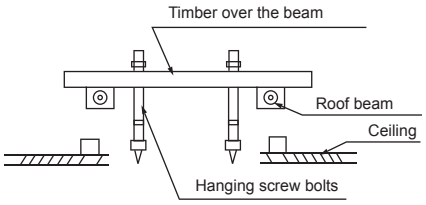

Fig.5-3

NEW CONCRETE BRICKS

Inlaying or embedding the screw bolts.

Fig.5-4

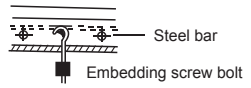

(Pipe hanging and embedding screw bolt)

Fig.5-5

FOR ORIGINAL CONCRETE BRICKS

Install the hanging hook with expansible bolt into the concrete deep to 45~50mm to prevent loose.

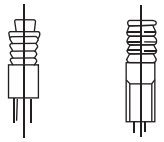

Fig.5-6

STEEL ROOF BEAM STRUCTRUE

Install and use directly the supporting angle steel.

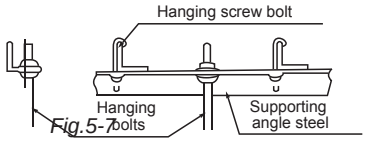

Fig.5-7

2 Install the indoor unit.

- Remove the side board and the grille.*(Refer to Fig. 5-8)*

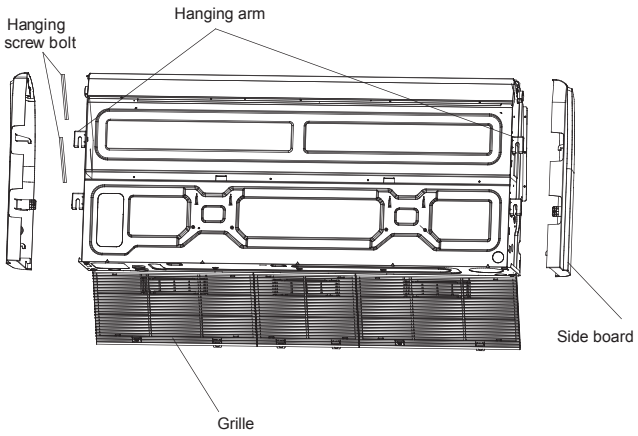

Fig.5-8

- Locate the hanging arm on the hanging screw bolt. *(Refer to Fig. 5-9)*

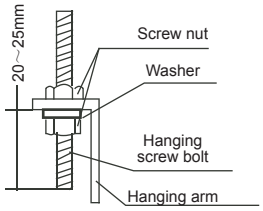

Fig.5-9

2. Ceiling Installation

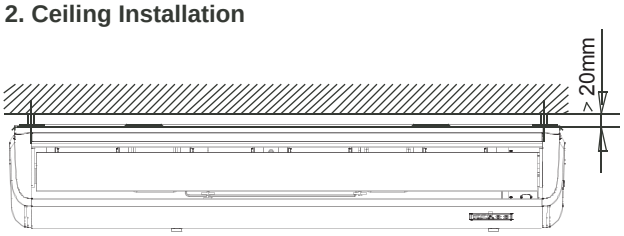

Fig. 5-10

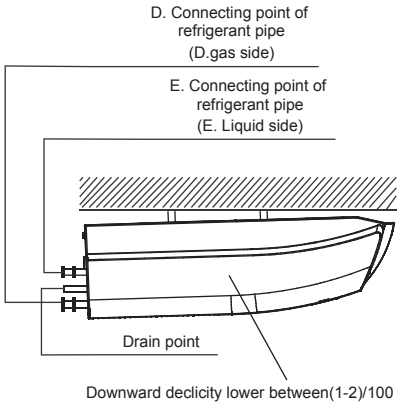

Fig. 5-11

3. Wall Mounting Installtion

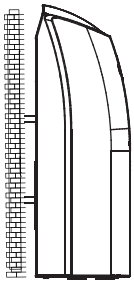

Fig. 5-12

5.3 The dimension of the unit

Table 5-1 unit：mm

MODEL	A	B	C	D	E
18~24	1068	675	235	983	220
30~48	1285	675	235	1200	220
36~48	1650	675	235	1565	220
60	1650	675	235	1565	220

6. OUTDOOR UNIT INSTALLATION

6.1 Installation Place

■ **The outdoor unit should be installed in the location that meets the following requiements:**

- There is enough room for installation and maintenance.
- The air outlet and the air inlet are not impeded, and can not be reached by strong wind.
- It must be a dry and well ventilating place.
- The support is flat and horizontal and can stand the weight of the outdoor unit. And will no additional noise or vibration.
- Your neighborhood will not feel uncomfortable with the noise or expelled air.
- It is easy to install the connecting pipes or cables.
- Determine the air outlet direction where the discharged air is not blocked.
- There is no danger of fire due to leakage of inflammable gas.

- The piping length between the outdoor unit and the indoor unit may not exceed the allowable piping length.
- In the case that the installation place is exposed to strong wind such as a seaside, make sure the fan operating properly by putting the unit lengthwise along the wall or using a dust shield.*(Refer to Fig.6-1)*
- If possible, do not install the unit where it is exposed to direct sunlight.
- If necessary, install a blind that does not interfere with the air flow.
- During the heating mode, the water drained off the outdoor unit ,The condensate should be well drained away by the drain hole to an appropriate place, so as not to interfere other people.
- Select the position where it will not be subject to snow drifts, accumulation of leaves or other seasonal debris. If unavoidable, please cover it with a shelter.
- Locate the outdoor unit as close to the indoor unit as possible.
- If possible, please remove the obstacles nearby to prevent the performance from being impeded by too little of air circulation.
- The minimum distance between the outdoor unit and obstacles described in the installation chart does not mean that the same is applicable to the situation of an airtight room. Leave open two of the three directions.*(Refore to Fig.6-7, Fig.6-8, Fig.6-9)*

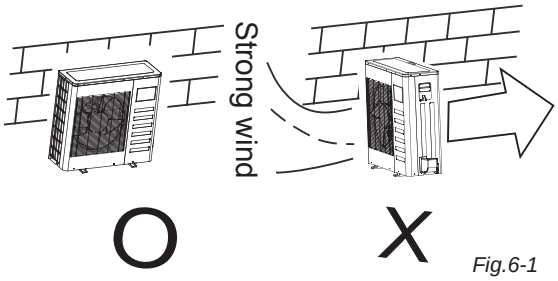

Fig.6-1

NOTE

The dimension of 12 and 24 are the same
The dimension of 30 and 36 are the same
The dimension of 48 and 60 are the same

6.2 Figure of body size

1. Split type outdoor unit

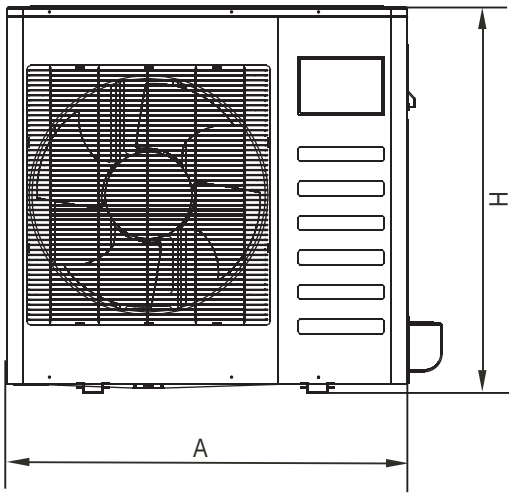

Fig.6-2

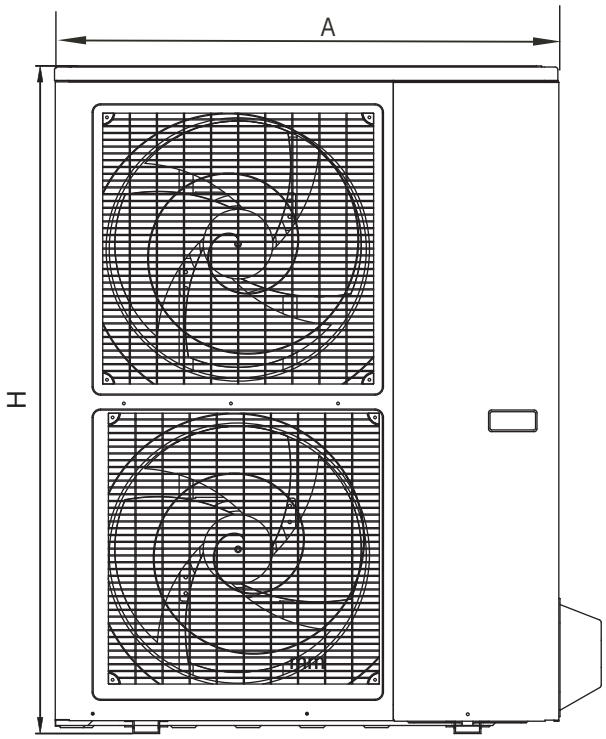

Fig.6-3

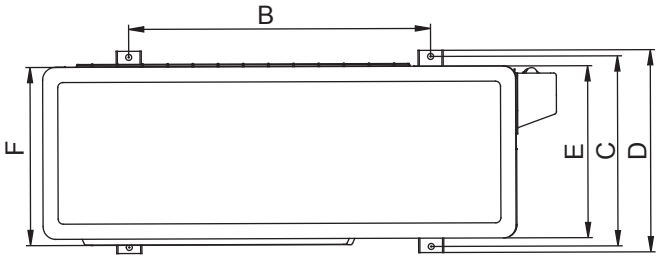

Fig.6-4

Table 6-1 unit：mm

MODEL	A	B	C	D	E	F	H	REMARK
12	760	530	290	315	270	285	590	*Fig.6-2*
18	760	530	290	315	270	285	590	*Fig.6-2*
	845	560	335	360	312	320	700	*Fig.6-2*
24	845	560	335	360	312	320	700	*Fig.6-2*
	900	590	333	355	302	315	860	*Fig.6-2*
	990	624	366	396	340	345	965	*Fig.6-2*
30	990	624	366	396	340	345	965	*Fig.6-2*
	900	590	333	355	302	315	860	*Fig.6-2*
36	990	624	366	396	340	345	965	*Fig.6-2*
	938	634	404	448	368	392	1369	*Fig.6-3*
42	990	624	366	396	340	345	965	*Fig.6-2*
	938	634	404	448	368	392	1369	*Fig.6-3*
48	990	624	366	396	340	345	965	*Fig.6-2*
	938	634	404	448	368	392	1369	*Fig.6-3*
	900	590	378	400	330	350	1170	*Fig.6-3*
60	938	634	404	448	368	392	1369	*Fig.6-3*
	900	590	378	400	330	350	1170	*Fig.6-3*

3. Centrifugal fan type outdoor unit

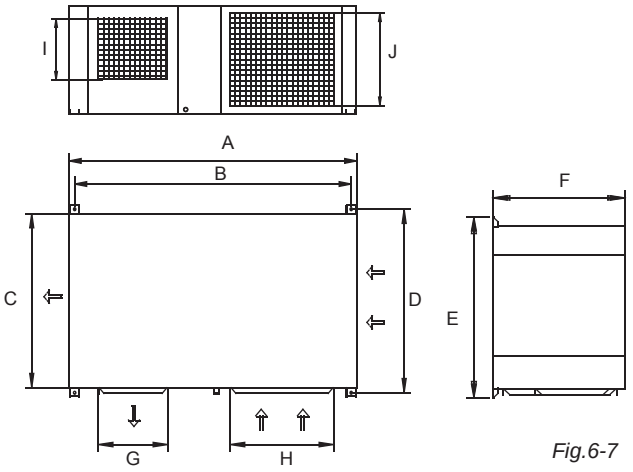

Fig.6-7

Table 6-3 unit：mm

MODEL	A	B	C	D	E	F	G	H	I	J
18	1174	1120	680	720	750	475	300	430	265	393
24	1174	1120	680	720	750	475	300	430	265	393
30-36	1381	1328	702	740	770	520	336	500	296	443
30-36	1394	1338	783	820	850	568	398	574	342	463
48	1394	1338	783	820	850	568	398	574	342	463
60	1394	1338	783	820	850	568	398	574	342	463

2. Vertical discharge type outdoor unit

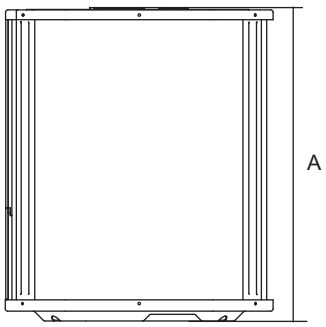

Fig.6-5

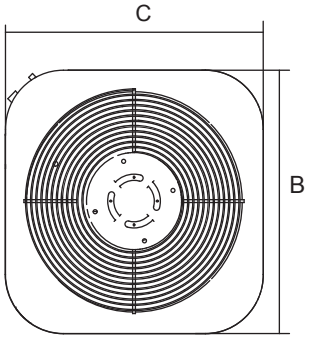

Fig.6-6

Table 6-2 unit：mm

MODEL	DIMENSIONS			REMARK
	A	B	C	
18	633	554	554	Refore to *Fig.6-5* *Fig.6-6*
24	633	554	554	
36	759	554	554	
36	633	600	600	
36	759	600	600	
36/48/60	759	710	710	
60	843	710	710	

6.3 Space of installation and maintenance

1. Split type outdoor unit

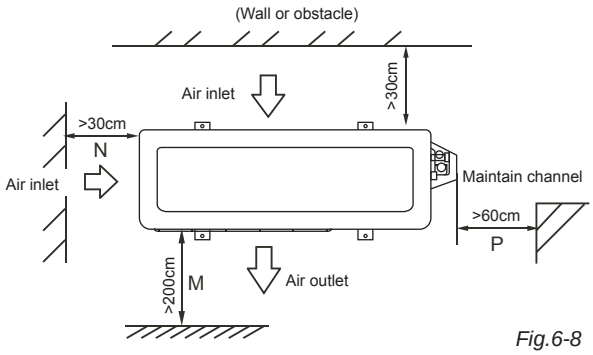

Fig.6-8

2. Vertical discharge type outdoor unit

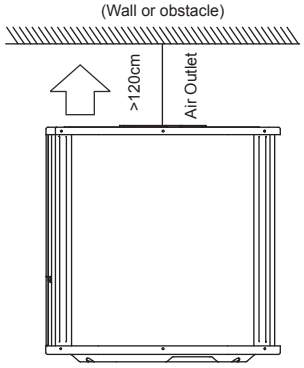

Fig.6-9

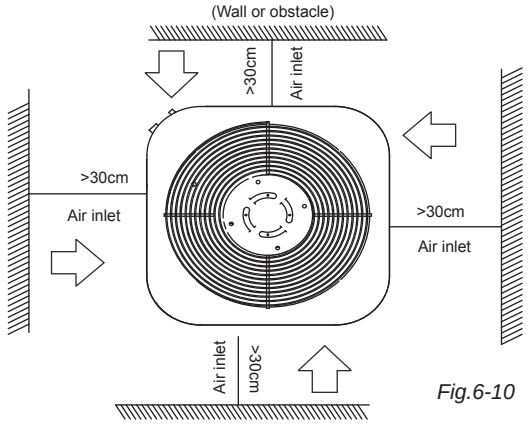

Fig.6-10

3. Centrifugal fan type outdoor unit

a) In case that suspending in the ceiling

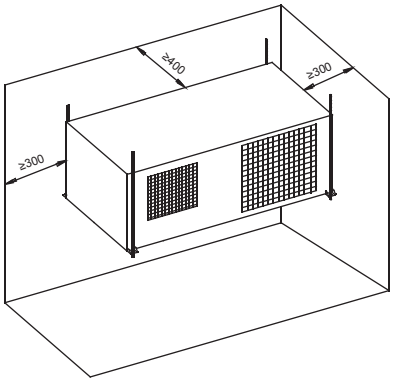

Fig.6-11

b)In case that installing on the floor

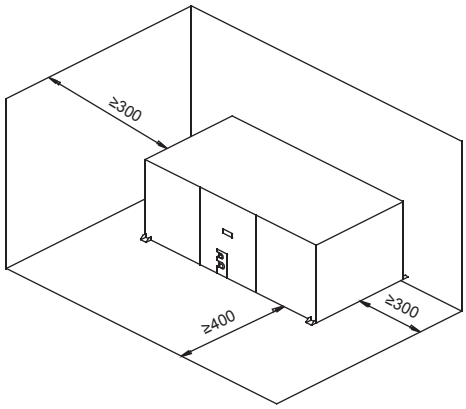

Fig.6-12

NOTE

All the figures in this manual are for explanation purpose only. They may be slightly different from the air conditioner you purchased.The actual unit shall prevail.

6.4 Available configuration for centrifugal fan type outdoor unit

Four different configuration are available for oudoor unit only changing the panels and fan position.

NOTE

Keep in mind that fan unit weight is aprox 30kg ,the unit as well as relevant equipment covered with the vinyl cover during installation work.

■ **Air inlet modification**

To change air inlet is only necessary to interchange the indicated panels position. Both panels use screws to be fixed to unit chassis.

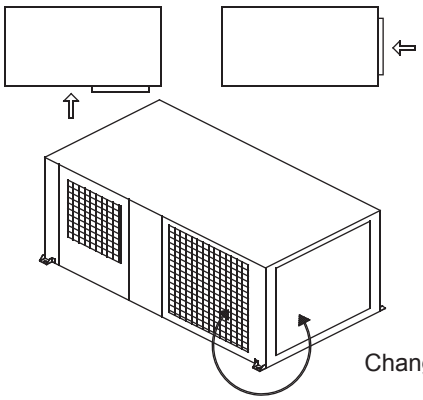

Change Panel

Fig6-13

To change air outlet is necessary to interchange panels too. Fan outlet panel is attached to fan structure, which must be mounted as follow.

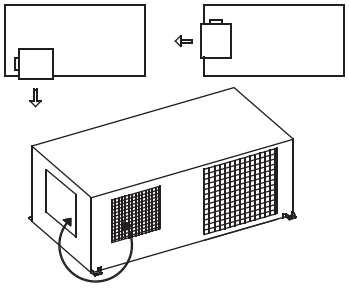

Fig.6-14

6.5 Moving and installation

- Since the gravity center of the unit is not at its physical center, so please be careful when lifting it with a sling.
- Never hold the inlet of the outdoor unit to prevent it from deforming.
- Do not touch the fan with hands or other objects.
- Do not lean it more than 45°, and do not lay it sidelong.
- Make concrete foundation accoding to the sepecif-ications of the outdoor units.*(Refer to Fig.6-15)*
- Fasten the feet of this unit with bolts firmly to prevent it from collapsing in case of earthquake or strong wind.*(Refer to Fig.6-15)*

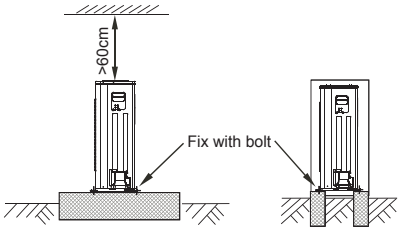

Fig.6-15

■ **Concrete Foundation**

1. Foundation could be on flat and is recommended be 100-300mm higher than ground level.
2. Install a drainage around foundation for smooth drain
3. When installing the outdoor unit fix the unit by anchor bolts of M10
4. When installing the unit on a roof or a veranda, drain water sometimes turns to ice on the cold weather. Therefore, avoid draining in an area that people often use because it is slippery.

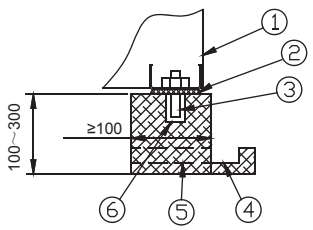

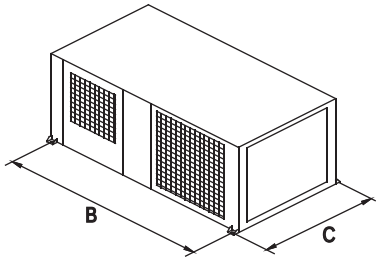

Fig.6-16

Table 6-4

No	Description
①	Outdoor Unit
②	Vibration-proof rubber
③	Anchor Bolt M10
④	Drainage (Wide 100×Depth 150)
⑤	Drainage
⑥	Mortar Hole (Φ100×Depth 150)

Table 6-5 unit：mm

MODEL	B	C
18～24	1120	720
30~36	1328	740
30~36	1338	820
48～60	1338	820

■ **Suspended unit**

1. Suspend the unit as the drawing indicates.
2. Ensure that ceiling can resist the Outdoor unit weight indicated in specification label plate.

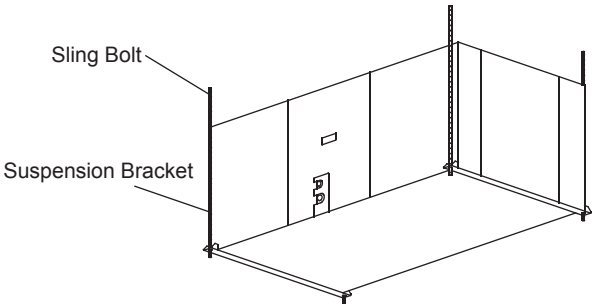

Fig.6-17

7. INSTALL THE CONNECTING PIPE

Check whether the height drop between the indoor unit and outdoor unit, the length of refrigerant pipe, and the number of the bends meet the following requirements:
(The number of the bends less than 15)

Table 7-1

The type of models	Model	The length of refrigerant pipe	The max height drop
50Hz T1 condition/R22 Split type air conditioner	12K	15	8
	18K-24K	30	10
	30K-42K	50	20
	48K-60K	50	25
50Hz Vertical discharge air conditioner /60Hz T1 condition/R22 Split type air conditioner and Vertical discharge air conditioner	12K	15	8
	18K-24K	30	10
	30K-60K	30	20
R410A inverter Split type air conditioner and and Centrifugal fan outdoor unit	12K	10	5
	18K-24K	25	12
	30K	25	15
	36K	30	20
	48K-60K	50	25
R410A Split type air conditioner and and Centrifugal fan outdoor unit	12K	15	8
	18K-30K	25	15
	36K	30	20
	48K-60K	50	25
50Hz/60Hz T3 condition (outdoor unit down)	18K-24K	25	10
	30K	30	15
	36K	30	20
	42K-60K	50	25
50Hz/60Hz T3 condition (outdoor unit up)	18K-24K	25	15
	30K	30	20
	36K	30	25
	42K	50	30
	48K-60K	50	35
the unit with quick joint	12K-18K	5	5

7.1 The Procedure of Connecting Pipes

CAUTION

All field piping must be provided by a licensed refrigeration technician and must comply with the relevant local and national codes.

Do not let air, dust, or other impurities fall in the pipe system during the time of installation.

The connecting pipe should not be installed until the indoor and outdoor units have been fixed already.

Keep the connecting pipe dry, and do not let moisture in during installation.

Execute heat insulation work completely on both sides of the gas piping and the liquid piping. Otherwise, this can sometimes result in water leakage.

1 Drill a hole in the wall (suitable just for the size of the wall conduit), then set on the fittings such as the wall conduit and its cover.

2 Bind the connecting pipe and the cables together tightly with binding tapes.Pass the bound connecting pipe through the wall conduct from outside. Be careful of the pipe allocation to do on damage to the tubing.

3 Connect the pipes. Refer to "How to Connect the pipes" for details.

4 Expel the air with a vacuum pump. Refer to "How to expel the air with a vacuum pump" for details.

5 Open the stop values of the outdoor unit to make the refrigerant pipe connecting the indoor unit with the outdoor unit in fluent flow.

6 Check the leakage. Check all the joints with the leak detector or soap water.

7 Cover the joints of the connecting pipe with the soundproof / insulating sheath (fittings), and bind it well with the tapes to prevent leakage.

CAUTION

Be sure to with insulating materials cover all the exposed parts of the flare pipe joints and refrigerant pipe on the liquid-side and the gas-side. Ensure that there is no gap between them.
Incomplete insulation may cause water condensation.

How to Connect the pipes

1 Flaring

- Cut a pipe with a pipe cutter. *(Refer to Fig.7-1)*

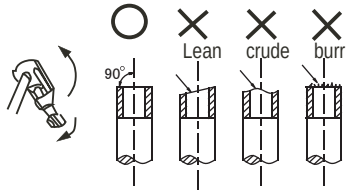

Fig.7-1

- Insert a flare nut into a pipe and flare the pipe.
- Refer to Table 7-2 for the dimension of flare nut spaces.

Table 7-2

Pipe gauge	Tightening torque	Flare dimensin A min (mm)	max	Flare shape
Ø6.35	15～16 N.m (153～163 kgf.cm)	8.3	8.7	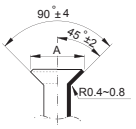
Ø9.52	25～26N.m (255～265 kgf.cm)	12.0	12.4	
Ø12.7	35～36 N.m (357～367 kgf.cm)	15.4	15.8	
Ø15.9	45～47 N.m (459～480 kgf.cm)	18.6	19.0	
Ø19	65～67N.m (663～684 kgf.cm)	22.9	23.3	

2 Remove the Cycle Service Panel and the Cover Board, unscrewing the screws which secure it to the structure

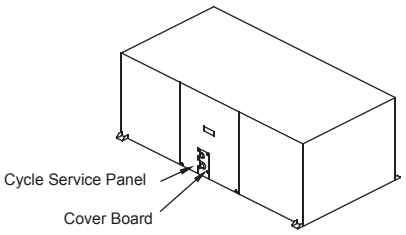

Fig.7-2

3 Remove the protection cover of stop valve

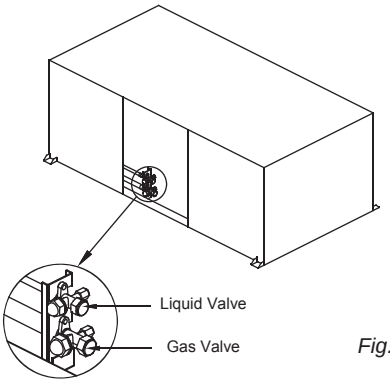

Fig.7-3

4 Connect the indoor unit at first, then the outdoor unit.

- Bend the tubing in proper way. Do not harm to them.

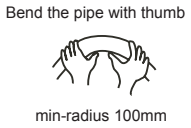

Fig.7-4

- The bending angle should not exceed 90.
- Bending position is preferably in the middle of the bendable pipe. The larger the bending radius the better it is.
- Do not bend the pipe more than three times.
- When connecting the flare nut, coat the flare both inside and outside with either oil or ester oil and initially tighten by hand 3 or 4 turns before tighting firmly.

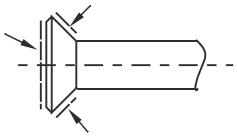

Fig.7-5

- Be sure to use both a spanner and torque wrench together when connecting or disconnecting pipes to /from the unit.

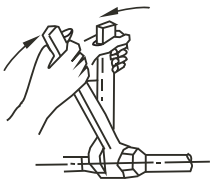

Fig.7-6

CAUTION

Too large torque will harm the bellmouthing and too small will cause leakage. Please determine the torque according to Table 7-2.
After the connecting work is finished, be sure to check that there is no gas leak.

How to expel the air with a vacuum pump

- **Stop valve operation introduction**

1. Opening stop valve

1. Remove the cap and turn the valve counter clock-wise with the hexagon wrench.
2. Turn it until the shaft stops.Do not apply excessive force to the stop valve. Doing so may break the valve body, as the valve is not a backseat type. Always use the special tool.
3. Make sure to tighten the cap securely.

2. Closing stop valve

1. Remove the cap and turn the valve clockwise with the hexagon wrench.
2. Securely tighten the valve until the shaft contacts the main bodyseal.

   Make sure to tighten the cap securely.
   For the tightening torque, refer to the table below.

Table 7-3

Tightening torque N•M (Turn clockwise to close)				
Stop Valve size	Shaft (valve body)		Cap (Valve lid)	Maintenance nut
Ø6.35	5～7	Hexagonal wrench 4 mm	13.5～16.5	11.5～13.9
Ø9.52				
Ø12.7	7～9		18～22	
Ø15.9	9～11	Hexagonal wrench 6 mm	23～27	
Ø19	11～13	Hexagonal wrench 6 mm	35～40	

CAUTION

Always use a charge hose for service port connection
After tightening the cap, check that no refrigerant leaks arepresent.

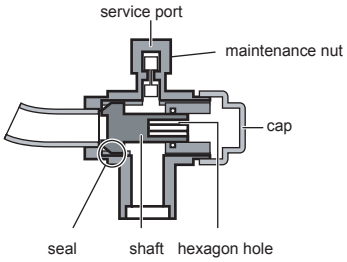

Fig.7-7

- **Using the vacuum pump**

1 Loosen and remove the maintenance nuts of stop valves A and B, and connect the charge hose of the manifold valve to the service port of stop valve A. (Be sure that stop valves A and B are both closed)

2 Connect the joint of the charge hose with the vacuum pump.

3 Open the Lo-lever of the manifold value completely.

4 Turn on the vacuum pump. At the beginning of pumping, loosen the maintenance nut of stop valve B a little to check whether the air comes in (the sound of the pump changes, and the indicator of compound meter turns below zero). Then fasten the maintenace nut.

5 When the pumping has finished, close the Lo-lever of the manifold valve completely and turn off the vacuum pump.Make pumping for 15 minutes or more and check that the compound meter indicates -76cmHg(-1X10^{5}Pa)

6 Loosen and remove the cap of stop valves A and B to open stop valve A and B completely, then fasten the cap.

7 Disassemble the charge hose from the service port of stop valve A, and fasten the nut.

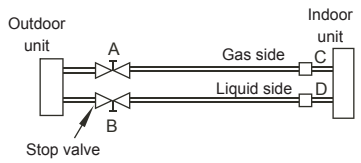

Fig.7-8

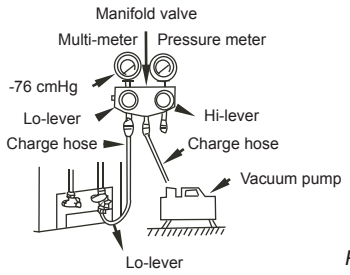

Fig.7-9

7.2 Additional Refrigerant Charge

CAUTION

Refrigerant cannot be charged until field wiring has been completed.

Refrigerant may only be charged after performing the leak test and the vacuum pumping.

When charging a system, care shall be taken that its maximum permissible charge is never exceeded, in view of the danger of liquid hammer.

Charging with an unsuitable substance may cause explosions and accidents, so always ensure that the appropriate refrigerant is charged.

Refrigerant containers shall be opened slowly.

Always use protective gloves and protect your eyes when charging refrigerant.

■ The outdoor unit is factory charged with refrigerant. Calculate the added refrigerant according to the diameter and the length of the liquid side pipe of the outdoor unit/indoor unit connection.(suitable for throttle outdoor unit)

Table 7-4

Liquid tube(mm)		R410A	R22
Ø6.35	orifice in the indoorunit	0.022kg/m×(L-5)	0.030kg/m×(L-5)
	orifice in the outdoorunit	0.011kg/m×(L-5)	0.015kg/m×L
Ø9.52	orifice in the indoorunit	0.060kg/m×(L-5)	0.065kg/m×(L-5)
	orifice in the outdoorunit	0.030kg/m×(L-5)	0.030kg/m×L
Ø12.7	orifice in the indoorunit	0.110kg/m×(L-5)	0.115kg/m×(L-5)
	orifice in the outdoorunit	0.060kg/m×(L-5)	0.060kg/m×L
Ø15.9	orifice in the indoorunit	0.170kg/m×(L-5)	0.190kg/m×(L-5)
	orifice in the outdoorunit	0.085kg/m×(L-5)	0.095kg/m×L
Ø19	orifice in the indoorunit	0.250kg/m×(L-5)	0.290kg/m×(L-5)
	orifice in the outdoorunit	0.125kg/m×(L-5)	0.145kg/m×L

- NOTE:the table above refer to the liquid tube.
- NOTE:The number of bends is up to the length of the max height drop.Usually for each 10m need a bend.

NOTE

If a negative result is gotten for R from Table 7-4, no refrigerant needs to be added nor removed.
Additional refrigerant will be twice of R from Table 7-4 if the indoor unit installed throttle assembly.

8. CONNECT THE DRAIN PIPE

■ Install the drainpipe of the indoor unit

The outlet has PTI screw bread, Please use sealing materials and pipe sheath(fitting) when connecting PVC pipes.

CAUTION

- The drain pipe of indoor unit must be heat insulated, or it will condense dew, as well as the connections of the indoor unit.
- Hard PVC binder must be used for pipe connection, and make sure there is no leakage.
- With the connection part to the indoor unit, please be noted not to impose pressure on the side of indoor unit pipes.
- When the declivity of the drain pipe downwards is over 1/100, there should not be any winding.
- The total length of the drain pipe when pulled out traversely shall not exceed 20m, when the pipe is over long, a prop stand must be installed to prevent winding.
- Refer to the Fig.8-1 for the installation of the pipes.

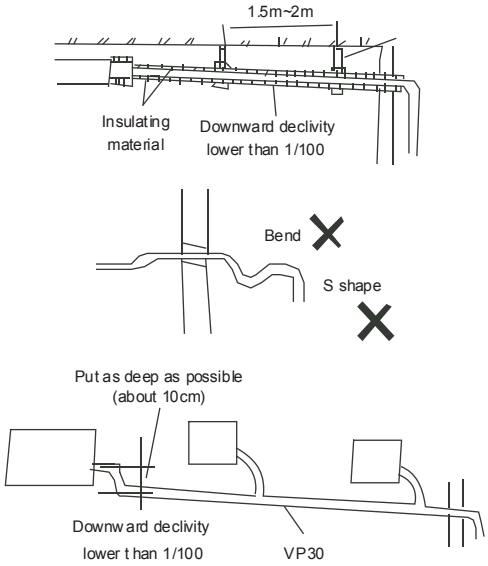

Fig. 8-1

Drainage test

- **Check whether the drainpipe is unhindered.**
- **New built house should have this test done before paving the ceiling.**

Install the drain joint of the outdoor unit

- Fit the seal into the drain joint, then insert the drain joint into the base pan hole of outdoor, rotate 90° to securely assemble them. Connect the drain joint with an extension drain hose (Locally purchased), in case of the condensate draining off the outdoor unit during the heating mode.*(Refer to Fig.8-2)*

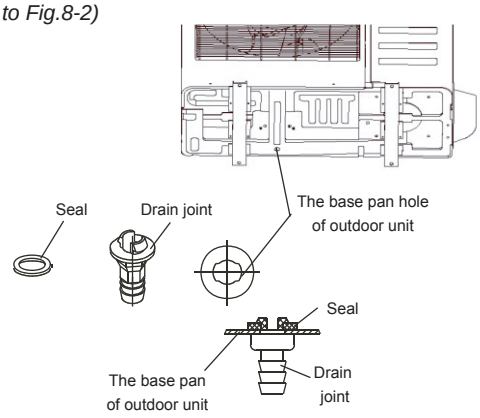

Fig.8-2

- Outdoor unit is equiped with a drain piping. Its position is shown figure below

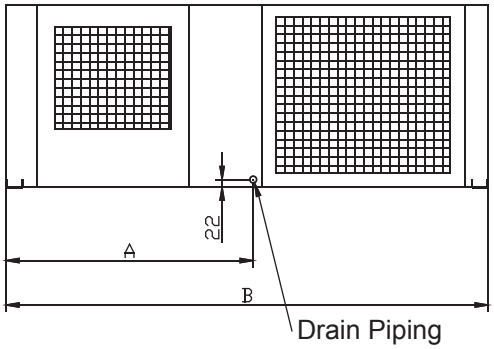

Fig.8-2

Table 8-1 unit：mm

MODEL	A	B
18～24	595	1200
36	624	1381
48～60	646	1385

- Prepare a polyviny chloride with 21mm inner diameter
- Fasten the tube to the drain hose with an adhesive and the field-supplied clamp. The drain piping must be performed with a DOWN-SLOPE pitch of 1/25 to 1/100
- Connect a siphon, as shown in figure below

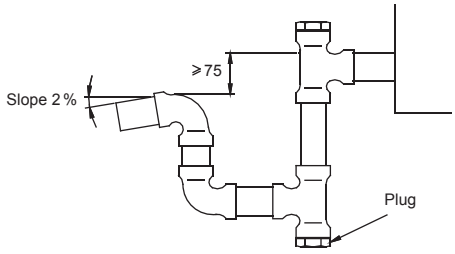

Fig.8-3

NOTE

All the figures in this manual are for explanation purpose only. They may be slightly different from the air conditioner you purchased.The actual unit shall prevail.

9. WIRING

The appliance shall be installed in accordance with national wiring regulations.

The air conditioner should use separate power supply with rated voltage.

The external power supply to the air conditioner should have ground wiring, which is linked to the ground wiring of the indoor and outdoor unit.

The wiring work should be done by qualified persons according to circuit drawing.

An all-pole disconnection device which has at least 3mm sepaaration distance in all pole and a residual current device (RCD) with the rating of above 10mA shall be incorporated in the fixed wiring according to the national rule.

Be sure to locate the power wiring and the signal wring well to avoid cross-disturbance.

Do not turn on the power until you have checked carefully after wiring.

The power cord type designation is H07RN-F.

NOTE

Remark per EMC Directive 2004/108/EC.
For to prevent flicker impressions during the start of the compressor (technical process) ,following installation conditions do apply.

1 The power connection for the air conditioner has to be done at the main power distribution. The distribution has to be of a low impedance, normally the required impedance reaches at a 32 A fusing point.

2 No other equipment has to be connected with this power line.

3 For detailed installation acceptance please refer to your power supplier, if restrictions do apply for products like washing machines, air conditioners or electrical ovens.

4 For power details of the air conditioner refer to the rating plate of the product.

5 For any question contact your local dealer.

9.1 Connect the cable

■ Dissemble the bolts from the cover.(If there isn't a cover on the outdoor unit, disassemble the bolts from the maintenance board, and pull it in the direction of the arrow to remove the protection board.) (Refer to *Fig.9-1, Fig.9-2, Fig.9-3*)

Split type outdoor unit

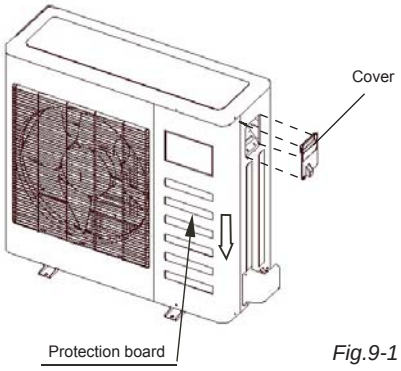

Fig.9-1

Vertical discharge type outdoor unit

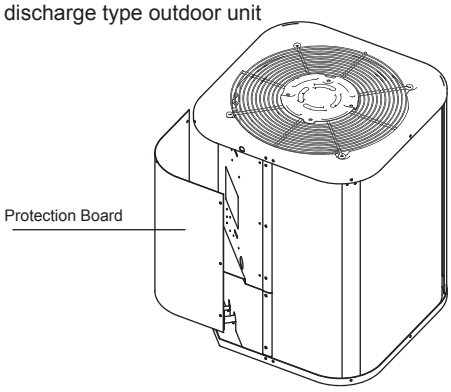

Fig.9-2

Centrifugal fan outdoor unit

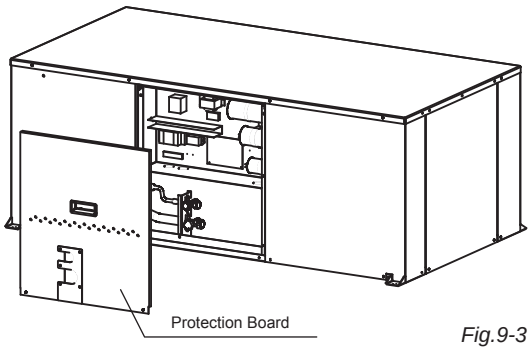

Fig.9-3

NOTE

All the figures in this manual are for explanation purpose only. They may be slightly different from the air conditioner you purchased.The actual unit shall prevail.

■ Connect the connective cables to the terminals as identified with their respective mached numbers on the terminal block of indoor and outdoor units.

■ Re-install the cover or the protection board.

9.2 The Specification of Power

(Refer to Table9-1～Table 9-15)

9.3 Wiring figure

(Refer to Fig.9-4～Fig.9-36)

10. TEST OPERATION

1 The test operation must be carried out after the entire installation has been completed.

2 Please confirm the following points before the test operation:

- The indoor unit and outdoor unit are installed properly.
- Tubing and wiring are correctly completed.
- The refrigerant pipe system is leakage-checked.
- The drainage is unimpeded.
- The heating insulation works well.
- The ground wiring is connected correctly.
- The length of the tubing and the added stow capacity of the refrigerant have been recorded.
- The power voltage fits the rated voltage of the air conditioner.
- There is no obstacle at the outlet and inlet of the outdoor and indoor units.
- The gas-side and liquid-side stop valves are both opened.
- The air conditioner is pre-heated by turning on the power.

3 According to the user's requirement, install the remote controller frame where the remote controller's signal can reach the indoor unit smoothly.

4 Test operation

■ Set the air conditioner under the mode of "COOLING" with the remote controller, and check the following points. If there is any malfunction, please resolve it according to the chapter "Troubleshooting" in the "Owner's Manual".

- 1) The indoor unit
  a. Whether the switch on the remote controller works well.
  b. Whether the buttons on the remote controller works well.
  c. Whether the air flow louver moves normally.
  d. Whether the room temperature is adjusted well.
  e. Whether the indicator lights normally.
  f. Whether the temporary buttons works well.
  g. Whether the drainage is normal.
  h. Whether there is vibration or abnormal noise during operation.
  I. Whether the air conditioner heats well in the case of the HEATING/COOLING type.
- 2) The outdoor unit
  a. Whether there is vibration or abnormal noise during operation.
  b. Whether the generated wind, noise, or condensed of by the air conditioner have influenced your neighborhood.
  c. Whether any of the refrigerant is leaked.

CAUTION

A protection feature prevents the air conditioner from being activated for approximately 3 minutes when it is restarted immediately after shut off.

The Specification of Power(indoor power supply)

■ **Table 9-1**

MODEL		18	24	30~36	42~48	60
POWER	PHASE	1Phase	1Phase	1Phase	1Phase	1Phase
	FREQUENCY AND VOLT	208-240V	208-240V	208-240V	208-240V	208-240V
CIRCUIT BREAKER/FUSE(A)		20/16	40/25	50/30	60/45	60/50

■ **Table 9-2**

MODEL		30~36	42~60	30~36	42~60
POWER	PHASE	3Phase	3Phase	3Phase	3Phase
	FREQUENCY AND VOLT	380-420V	380-420V	208-240V	208-240V
CIRCUIT BREAKER/FUSE(A)		25/20	25/20	40/25	45/35

The Specification of Power(outdoor power supply)

■ **Table 9-3**

MODEL		24	30~36	42~48	60
POWER	PHASE	1Phase	1Phase	1Phase	1Phase
	FREQUENCY AND VOLT	208-240V	208-240V	208-240V	208-240V
CIRCUIT BREAKER/FUSE(A)		40/30	60/40	70/55	70/60

■ **Table 9-4**

MODEL		30~36	42~60	30~36	42~60
POWER	PHASE	3Phase	3Phase	3Phase	3Phase
	FREQUENCY AND VOLT	380-420V	380-420V	208-240V	208-240V
CIRCUIT BREAKER/FUSE(A)		25/20	25/20	40/25	45/35

The Specification of Power(independence power supply)

■ **Table 9-5**

MODEL		18	24	30~36	42~48	60
POWER (indoor)	PHASE	1Phase	1Phase	1Phase	1Phase	1Phase
	FREQUENCY AND VOLT	208-240V	208-240V	208-240V	208-240V	208-240V
CIRCUIT BREAKER/FUSE(A)		20/16	20/16	20/16	20/16	20/16
POWER (outdoor)	PHASE	1Phase	1Phase	1Phase	1Phase	1Phase
	FREQUENCY AND VOLT	208-240V	208-240V	208-240V	208-240V	208-240V
CIRCUIT BREAKER/FUSE(A)		20/16	40/25	50/30	60/45	60/50

■ **Table 9-6**

MODEL		30~36	42~60	30~36	42~60
POWER (indoor)	PHASE	1Phase	1Phase	1Phase	1Phase
	FREQUENCY AND VOLT	208-240V	208-240V	208-240V	208-240V
CIRCUIT BREAKER/FUSE(A)		20/16	20/16	20/16	20/16
POWER (outdoor)	PHASE	3Phase	3Phase	3Phase	3Phase
	FREQUENCY AND VOLT	380-420V	380-420V	208-240V	208-240V
CIRCUIT BREAKER/FUSE(A)		25/20	25/20	40/25	45/35

The Specification of Power for the invert type air conditioner(independence power supply)

■ **Table 9-7**

MODEL		18	24	30~36	42~48	60
POWER (indoor)	PHASE	1Phase	1Phase	1Phase	1Phase	1Phase
	FREQUENCY AND VOLT	220-240V	220-240V	220-240V	220-240V	220-240V
CIRCUIT BREAKER/FUSE(A)		15/10	15/10	15/10	15/10	15/10
POWER (outdoor)	PHASE	1Phase	1Phase	1Phase	1Phase	1Phase
	FREQUENCY AND VOLT	208-240V	208-240V	208-240V	208-240V	208-240V
CIRCUIT BREAKER/FUSE(A)		30/20	30/20	40/30	40/35	50/40

■ **Table 9-8**

MODEL		30~36	42~60	30~36	42~60
POWER (indoor)	PHASE	1Phase	1Phase	1Phase	1Phase
	FREQUENCY AND VOLT	220-240V	220-240V	220-240V	220-240V
CIRCUIT BREAKER/FUSE(A)		15/10	15/10	15/10	15/10
POWER (outdoor)	PHASE	3Phase	3Phase	3Phase	3Phase
	FREQUENCY AND VOLT	380-420V	380-420V	208-240V	208-240V
CIRCUIT BREAKER/FUSE(A)		30/20	30/25	50/40	50/40

CAUTION

The power supply is included in the power supply above mentioned can be applied to the table.
Before obtaining access to terminals, all supply circuits must be disconnected.

■ Wiring figure

■ **Fig.9-5**

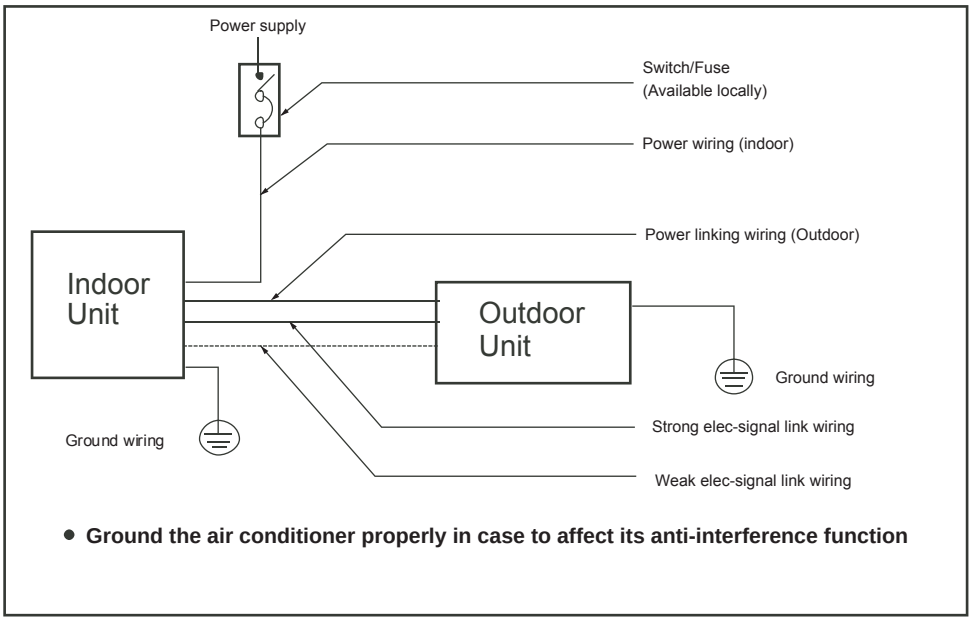

■ **Fig.9-6**

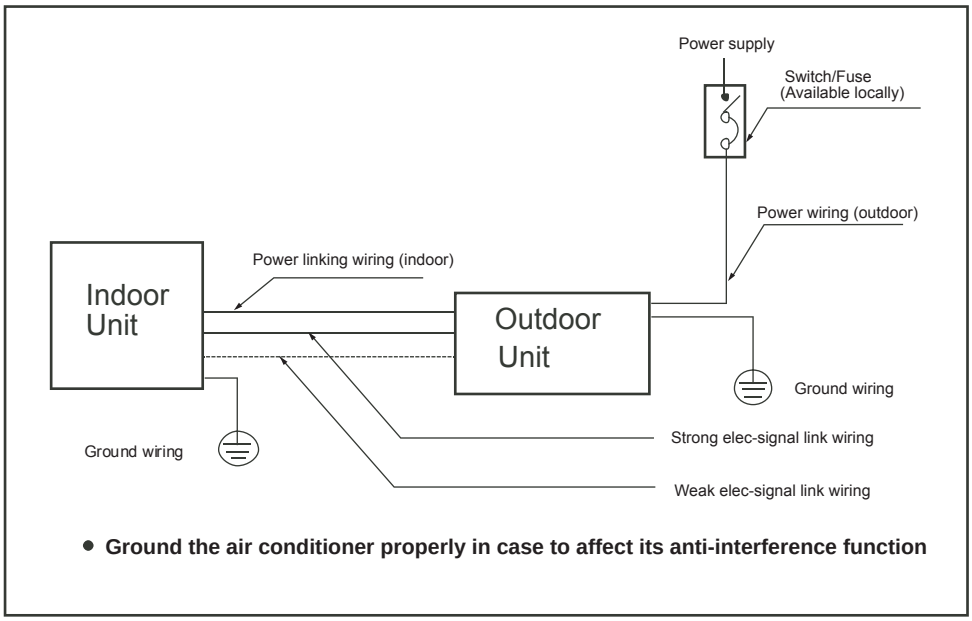

■ **Fig.9-7**

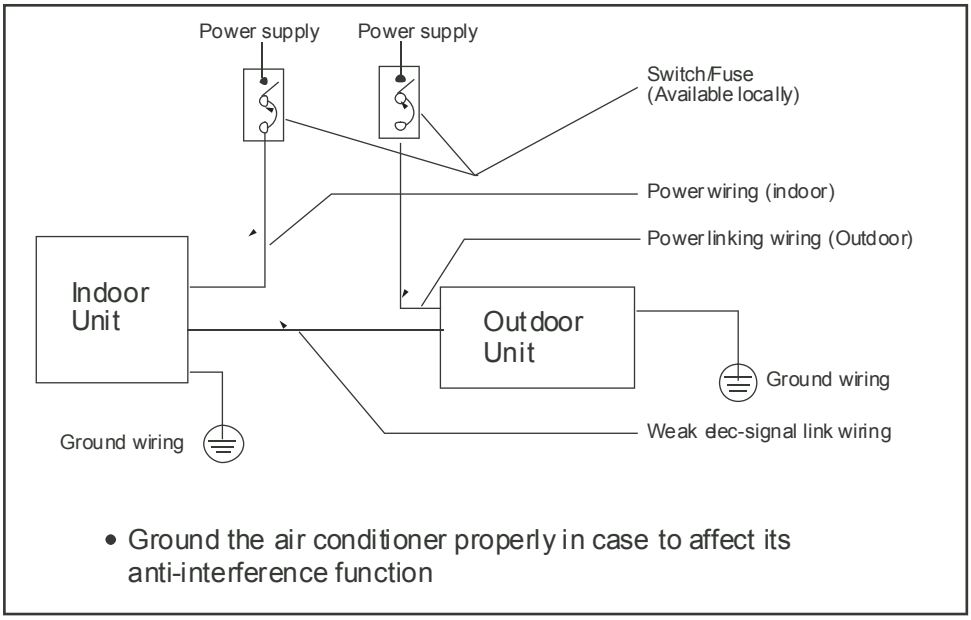

■ **Fig.9-8**

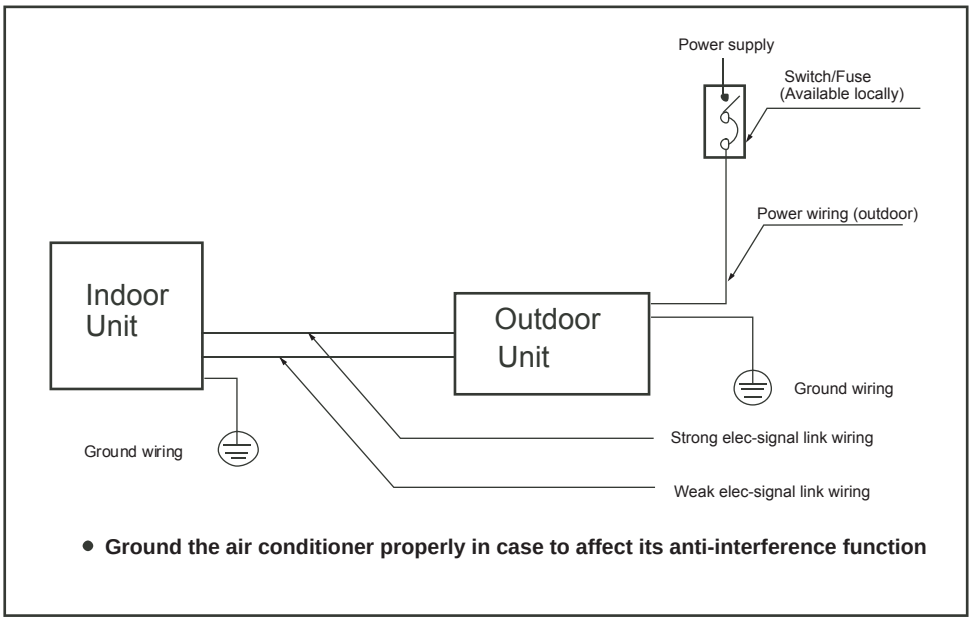

CAUTION

A disconnection device having an air gap contact separation in all active conductors should be incorporated in the fixed wiring according to the National Wiring Regulation.

When wiring, please choose the corresponding chart, or it may cause damage.The signs of the indoor terminal block in the some of following fugures may be replaced by L N L1 N1.

The design and specifications are subject to change without prior notice for product improvement.Consult with the sales agency or manufacturer for details

202000192522
20130522