BALDOR
MOTORS AND DRIVES

MOTION CONTROL

NextMove BX*II*
Motion Controller

Installation Manual

3/02 MN1904

Contents

1 General Information 1-1

2 Introduction 2-1

2.1 NextMove BX^{II} features 2-1

2.2 Receiving and inspection 2-2

2.2.1 Identifying the catalog number 2-2

2.3 Units and abbreviations 2-3

3 Basic Installation 3-1

3.1 Introduction 3-1

3.1.1 Power sources 3-1

3.1.2 PC Hardware requirements 3-1

3.1.3 Tools and miscellaneous hardware 3-2

3.1.4 Other information needed for installation 3-2

3.2 Mechanical installation and location requirements 3-3

3.2.1 Mounting the NextMove BX^{II} 3-4

4 Input / Output 4-1

4.1 Outline 4-1

4.2 Connector locations - top panel 4-1

4.3 Connector locations - front panel 4-2

4.4 Power connections 4-3

4.4.1 Power - X8 4-3

4.5 Analog I/O 4-4

4.5.1 Analog inputs - X3 4-4

4.5.2 Analog outputs (Demands) - X7 4-6

4.6 Digital I/O 4-7

4.6.1 Digital inputs - X1 4-8

4.6.2 Digital inputs - X2 4-9

4.6.3 Digital inputs (Interrupts) - X6 4-10

4.6.4 Digital outputs - X4 4-11

4.7 Other I/O 4-12

4.7.1 Encoder interfaces - X9, X10, X11, X12, X13 4-12

4.7.2 Encoder input frequency 4-13

4.7.3 Relay and user power - X5 4-14

4.7.4 RS232 - X15 4-15

4.7.5 Connecting Baldor HMI Operator Panels 4-17
4.7.6 RS422 / RS485 - X14 4-18
4.7.7 CAN connectors - X16 & X17 4-20
4.7.8 CANopen 4-21
4.7.9 Baldor CAN 4-21

4.8 Reset states 4-22
4.8.1 System watchdog 4-22

4.9 Connection summary - minimum system wiring 4-23

5 Operation 5-1

5.1 Introduction 5-1
5.1.1 Connecting the NextMove BX^{II} to the PC 5-1
5.1.2 Installing the software 5-1
5.1.3 Starting the NextMove BX^{II} 5-1
5.1.4 Preliminary checks 5-1
5.1.5 Power on checks 5-2

5.2 WorkBench v5 5-3
5.2.1 Help file 5-3
5.2.2 Starting WorkBench v5 5-4

5.3 Configuring an axis 5-6
5.3.1 Selecting a scale 5-6
5.3.2 Setting the drive enable output 5-7
5.3.3 Testing the drive enable output 5-8

5.4 Testing and tuning 5-9
5.4.1 Testing the drive command output 5-9

5.5 An introduction to closed loop control 5-11

5.6 Tuning an axis for current control 5-14
5.6.1 Selecting servo loop gains 5-14
5.6.2 Underdamped response 5-16
5.6.3 Overdamped response 5-17
5.6.4 Critically damped response 5-18

5.7 Eliminating steady-state errors 5-19

5.8 Tuning an axis for velocity control 5-20
5.8.1 Calculating KVELFF 5-20
5.8.2 Adjusting KPROP 5-23

5.9 Digital input/output configuration 5-25
5.9.1 Digital input configuration 5-25
5.9.2 Digital output configuration 5-26

5.10 Saving setup information 5-27

5.11 Loading saved information 5-28

6 Troubleshooting 6-1
6.1 Introduction 6-1
6.1.1 Problem diagnosis 6-1
6.1.2 SupportMe™ feature 6-1
6.2 NextMove BX^{II} indicators 6-2
6.2.1 Status display 6-2
6.2.2 Motor control 6-4
6.2.3 Communication 6-5
6.2.4 Axis LED is red or Status LED shows a flashing symbol 6-5

7 Specifications 7-1
7.1 Introduction 7-1
7.1.1 Input power 7-1
7.1.2 Analog inputs (X6) 7-1
7.1.3 Analog outputs (Demands - X7) 7-2
7.1.4 Digital inputs (X1 & X2) 7-2
7.1.5 Digital inputs (Interrupts) (X6) 7-2
7.1.6 Digital outputs (X4) 7-3
7.1.7 Relay output (X5) 7-3
7.1.8 Encoder interfaces (X9 - X13) 7-3
7.1.9 CAN interfaces (X16 & X17) 7-3
7.1.10 Environmental 7-4
7.1.11 Weights and dimensions 7-4

Appendices

A Accessories A-1
A.1 Introduction A-1
A.1.1 Baldor CAN nodes A-1
A.1.2 Encoder Splitter/Buffer board A-2

LT0158A00 Copyright Baldor (c) 2002. All rights reserved.

This manual is copyrighted and all rights are reserved. This document or attached software may not, in whole or in part, be copied or reproduced in any form without the prior written consent of BALDOR. BALDOR makes no representations or warranties with respect to the contents hereof and specifically disclaims any implied warranties of fitness for any particular purpose. The information in this document is subject to change without notice. BALDOR assumes no responsibility for any errors that may appear in this document.

Mint™ is a registered trademark of Baldor.
Windows 95, Windows 98, Windows ME, Windows NT, Windows 2000 and Windows XP are registered trademarks of the Microsoft Corporation.
UL and cUL are registered trademarks of Underwriters Laboratories.

Limited Warranty:
For a period of two (2) years from the date of original purchase, BALDOR will repair or replace without charge controls and accessories which our examination proves to be defective in material or workmanship. This warranty is valid if the unit has not been tampered with by unauthorized persons, misused, abused, or improperly installed and has been used in accordance with the instructions and/or ratings supplied. This warranty is in lieu of any other warranty or guarantee expressed or implied. BALDOR shall not be held responsible for any expense (including installation and removal), inconvenience, or consequential damage, including injury to any person or property caused by items of our manufacture or sale. (Some countries and U.S. states do not allow exclusion or limitation of incidental or consequential damages, so the above exclusion may not apply.) In any event, BALDOR's total liability, under all circumstances, shall not exceed the full purchase price of the control. Claims for purchase price refunds, repairs, or replacements must be referred to BALDOR with all pertinent data as to the defect, the date purchased, the task performed by the control, and the problem encountered. No liability is assumed for expendable items such as fuses. Goods may be returned only with written notification including a BALDOR Return Authorization Number and any return shipments must be prepaid.

Baldor UK Ltd
Mint Motion Centre
6 Bristol Distribution Park
Hawkley Drive
Bristol, BS32 0BF
Telephone: +44 (0) 1454 850000
Fax: +44 (0) 1454 850001
Email: technical.support@baldor.co.uk
Web site: www.baldor.co.uk

Baldor Electric Company
Telephone: +1 479 646 4711
Fax: +1 479 648 5792
Email: sales@baldor.com
Web site: www.baldor.com

Baldor ASR GmbH
Telephone: +49 (0) 89 90508-0
Fax: +49 (0) 89 90508-492

Baldor ASR AG
Telephone: +41 (0) 52 647 4700
Fax: +41 (0) 52 659 2394

Australian Baldor Pty Ltd
Telephone: +61 2 9674 5455
Fax: +61 2 9674 2495

Baldor Electric (F.E.) Pte Ltd
Telephone: +65 744 2572
Fax: +65 747 1708

Baldor Italia S.R.L
Telephone: +39 (0) 11 56 24 440
Fax: +39 (0) 11 56 25 660

Safety Notice

Only qualified personnel should attempt the start-up procedure or troubleshoot this equipment. This equipment may be connected to other machines that have rotating parts or parts that are controlled by this equipment. Improper use can cause serious or fatal injury. Only qualified personnel should attempt to start-up, program or troubleshoot this equipment.

Precautions

WARNING: Be sure that you are completely familiar with the safe operation and programming of this equipment. This equipment may be connected to other machines that have rotating parts or parts that are controlled by this equipment. Improper use can cause serious or fatal injury. Only qualified personnel should attempt to program, start-up or troubleshoot this equipment.

WARNING: The stop input to this equipment should not be used as the single means of achieving a safety critical stop. Drive disable, motor disconnect, motor brake and other means should be used as appropriate. Only qualified personnel should attempt to program, start-up or troubleshoot this equipment.

WARNING: Improper operation or programming may cause violent motion of the motor shaft and driven equipment. Be certain that unexpected motor shaft movement will not cause injury to personnel or damage to equipment. Peak torque of several times the rated motor torque can occur during control failure.

WARNING: When operating a motor with no load coupled to its shaft, remove the shaft key to prevent it flying out when the shaft rotates.

CAUTION: The safe integration of this equipment into a machine system is the responsibility of the machine designer. Be sure to comply with the local safety requirements at the place where the machine is to be used. In Europe these are the Machinery Directive, the ElectroMagnetic Compatibility Directive and the Low Voltage Directive. In the United States this is the National Electrical code and local codes.

CAUTION: To prevent equipment damage, be certain that the input power has correctly sized protective devices installed.

CAUTION: To prevent equipment damage, be certain that input and output signals are powered and referenced correctly.

CAUTION: To ensure reliable performance of this equipment be certain that all signals to/from the NextMove BX^{II} are shielded correctly.

CAUTION: Avoid locating this equipment immediately above or beside heat generating equipment, or directly below water or steam pipes.

CAUTION: Avoid locating this equipment in the vicinity of corrosive substances or vapors, metal particles and dust.

2.1 NextMove BX^{II} features

NextMove BX^{II} is a high speed multi-axis intelligent motion controller, supporting up to four servo axes.

NextMove BX^{II} features the Mint motion control language. Mint is a structured form of Basic, custom designed for motion control applications. It allows you to get started very quickly with simple motion control programs. In addition, Mint includes a wide range of powerful commands for complex applications.

Standard features of the NextMove BX^{II} include:

- Control of up to four axes
- Point to point moves, software cams and gearing
- 16 general purpose digital inputs, software configurable as level or edge triggered
- 4 fast position latch inputs
- 8 digital outputs
- 8 analog inputs with 12-bit resolution, configurable as single ended inputs or differential pairs
- CANopen protocol for peer-to-peer communications with Mint controllers and other third party devices
- Proprietary CAN protocol for control of Baldor remote I/O devices
- Programmable in Mint.

Included with NextMove BX^{II} is the Baldor Motion Tookit CD. This contains a number of utilities and useful resources to get the most from your Mint controller. These include:

- Mint WorkBench v5
  This is the user interface for communicating with the NextMove BX^{II}. Installing WorkBench v5 will also install firmware for NextMove BX^{II}.
- PC Developer Libraries
  These include ActiveX interfaces that allow PC applications to be written that communicate with the NextMove BX^{II}.
- Embedded Developer Libraries
  Allows embedded C31 applications to be developed using the Texas Instruments TMS320C3x compiler.

This manual is intended to guide you through the installation of NextMove BX^{II}.

The chapters should be read in sequence.

The *Basic Installation* section describes the mechanical installation of the NextMove BX^{II}. The following sections require knowledge of the low level input/output requirements of the installation and an understanding of computer software installation. If you are not qualified in these areas you should seek assistance before proceeding.

2.2 Receiving and inspection

When you receive your NextMove BX^{II}, there are several things you should do immediately:

1. Check the condition of the packaging and report any damage immediately to the carrier that delivered your NextMove BX^{II}.
2. Remove the NextMove BX^{II} from the shipping container. The packing materials may be retained for future shipment.
3. Verify that the catalog number of the NextMove BX^{II} you received is the same as the catalog number listed on your purchase order. The catalog/part number is described in the next section.
4. Inspect the NextMove BX^{II} for external damage during shipment and report any damage to the carrier that delivered it.
5. If the NextMove BX^{II} is to be stored for several weeks before use, be sure that it is stored in a location that conforms to the storage humidity and temperature specifications shown in section 7.1.10.

2.2.1 Identifying the catalog number

NextMove BX^{II} is available with different specifications. As a reminder of which model has been installed, it is a good idea to write the catalog number in the space provided below.

Catalog number: **NMX004-_____**

Installed in: _____ **Date:** _____

A description of the catalog numbers are shown in the following table:

Catalog number	Description
NMX004-501	NextMove BX^{II}, for control of 2 axes
NMX004-502	NextMove BX^{II}, for control of 3 axes
NMX004-503	NextMove BX^{II}, for control of 4 axes

2.3 Units and abbreviations

The following units and abbreviations may appear in this manual:

V . . . . . Volt (also VAC and VDC)
W . . . . . Watt
A . . . . . Ampere
Ω . . . . . Ohm
µF . . . . . microfarad
pF . . . . . picofarad
mH . . . . . millihenry

Φ . . . . . phase
ms . . . . . millisecond
µs . . . . . microsecond
ns . . . . . nanosecond

Kbaud . . . . . kilobaud (the same as Kbit/s in most applications)
MB . . . . . megabytes
CDROM . . . . . Compact Disc Read Only Memory
CTRL+E . . . . . on the PC keyboard, press **Ctrl** then **E** at the same time.

mm . . . . . millimeter
m . . . . . meter
in . . . . . inch
ft . . . . . feet
lb-in . . . . . pound-inch (torque)
Nm . . . . . Newton-meter (torque)

DAC . . . . . Digital to Analog Converter
ADC . . . . . Analog to Digital Converter
AWG . . . . . American Wire Gauge
(NC) . . . . . Not Connected
PC . . . . . Personal Computer (IBM compatible)

3.1 Introduction

You should read all the sections in *Basic Installation*.
It is important that the correct steps are followed when installing the NextMove BX^{II}. This section describes the mechanical installation and power requirements of the NextMove BX^{II}.

3.1.1 Power sources

An external (customer supplied) 24VDC logic supply is required. This must be a regulated power supply capable of providing:

- 24VDC ±20% at approximately 700mA (max) for the logic power supply
- 12 to 24VDC ±20% at approximately 400mA (max) for the isolated outputs
- 12 to 24VDC ±20% at approximately 200mA for the isolated digital inputs and fast interrupts.

A 24V filter may be required to comply with the CE directive for which the NextMove BX^{II} was tested.

3.1.2 PC Hardware requirements

A PC that fulfills the following specification will be required:

	Minimum specification	Recommended specification
Processor	Intel Pentium 133MHz	Intel Pentium 200MHz or faster
RAM	32MB	64MB
Hard disk space	40MB	60MB
CD-ROM	A CD-ROM drive	
Screen	800 x 600, 256 colors	1024 x 768, 256 colors
Mouse	A mouse or similar pointing device	
Operating system	Windows 95, Windows 98, Windows ME, Windows NT, Windows 2000 or Windows XP	

3.1.3 Tools and miscellaneous hardware

- Your PC operating system user manual might be useful if you are not familiar with Windows
- A small screwdriver (supplied) with a blade width less than 2.5mm (1/10 in).
- M5 screws or bolts for mounting the NextMove BX^{II}
- Crimping tool.

A connector kit is supplied with your NextMove BX^{II}, containing a number of useful connectors and accessories.

3.1.4 Other information needed for installation

This information is useful (but not essential) to complete the installation:

- The data sheet or manual provided with the servo drive controlling the motor, describing the wiring information of the cables/connectors
- Knowledge of which digital inputs/outputs will be ‘Active Low’, ‘Active High’ or edge triggered.

3.2 Mechanical installation and location requirements

It is essential that you read and understand this section before beginning the installation.

The safe operation of this equipment depends upon its use in the appropriate environment. The following points must be considered:

- The NextMove BX^{II} must be installed indoors, permanently fixed and located so that it can only be accessed by service personnel using tools.
- The maximum suggested operating altitude is 2000m (6562ft).
- The NextMove BX^{II} must operate in an ambient temperature of 0°C to 40°C (32°F to 104°F).
- The NextMove BX^{II} must operate in relative humidity levels of less than 80% for temperatures up to 31°C (87°F) decreasing linearly to 50% relative humidity at 40°C (104°F) (non-condensing).
- The NextMove BX^{II} must be installed where the pollution degree according to IEC664 shall not exceed 2.
- The external customer supplied 24VDC for the logic supply must be installed so that the 24VDC supplied to the unit is isolated from the AC supply using double or reinforced insulation.
- The inputs and outputs of the control circuit must be limited to Safety Extra Low Voltage circuits.
- The atmosphere must not contain flammable gases or vapors.
- There must not be abnormal levels of nuclear radiation or X-rays.
- The NextMove BX^{II} must be secured by the slots in the flange, with the protective earth/ground stud bonded to a safety earth/ground by a 25A conductor.
- The external customer supplied 24VDC logic supply might require a 24V filter.
- Each D-type connector on the front panel of the NextMove BX^{II} is secured using two hexagonal jack screws (sometimes known as “screwlocks”). If a jack screw is removed accidentally or lost it must be replaced with an identical jack screw with an external male threaded section of 5mm (0.2 in).
  Jack screws with *longer* threads might result in loose connections.
- The two D-type connectors on the top panel of the NextMove BX^{II} are each secured using two hexagonal jack screws (sometimes known as “screwlocks”). If a jack screw is removed accidentally or lost it must be replaced with an identical jack screw with an external male threaded section of 7mm (0.28 in). Jack screws with *shorter* threads might result in loose connections.

See also page 1-2.

3.2.1 Mounting the NextMove BX^{II}

Ensure you have read and understood the *Mechanical installation and location requirements* in section 3.2. Mount the NextMove BX^{II} on its rear side, the side opposite the front panel. The NextMove BX^{II} must be mounted upright to ensure adequate cooling. M5 bolts or screws should be used.

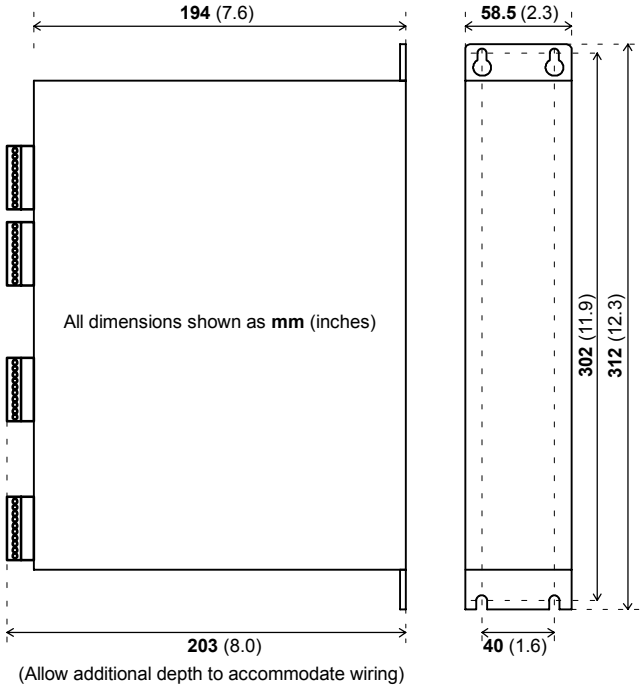

Figure 1 - Package dimensions

<u>This completes the basic installation</u>.

You should read the following sections in sequence before using the NextMove BX^{II}.

4.1 Outline

This section describes the location and purpose of each connector on the NextMove BX^{II}.

The following conventions will be used to refer to the inputs and outputs:

I/O . . . . . Input / Output
DIN . . . . . Digital Input
DOUT . . . . . Digital Output
AIN . . . . . Analog Input
AOUT . . . . . Analog Output

4.2 Connector locations - top panel

Jumpers

P	Power
1	CAN1
2	CAN2

X16 / X17 CAN

1	CAN1+
2	CAN1-
3	*(NC)*
4	CAN 0V
5	CAN V+
6	*(NC)*
7	CAN2+
8	CAN2-

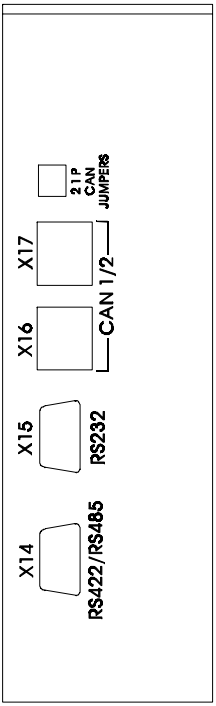

X15 RS232

1	Shield
2	RXD
3	TXD
4	DTR
5	0V GND
6	DSR
7	RTS
8	CTS
9	0V GND

X14 RS485

1	Shield
2	RX+
3	TX+
4	*(NC)*
5	0V GND
6	*(NC)*
7	TX-
8	RX-
9	0V GND

4.3 Connector locations - front panel

X1 Digital Inputs 8-15

1	DIN8
2	DIN9
3	DIN10
4	DIN11
5	DIN12
6	DIN13
7	DIN14
8	DIN15
9	CREF
10	Shield

X3 Analog Inputs

1	AIN0
2	AIN1
3	AIN2
4	AIN3
5	AIN4
6	AIN5
7	AIN6
8	AIN7
9	AGND
10	Shield

X5 Relay & User Power

1	Relay COM
2	Relay NC
3	Relay NO
4	Relay COM
5	USR V+
6	USR V+
7	CREF
8	CREF
9	CGND
10	CGND

X6 Interrupts

1	FASTIN0
2	Shield
3	CREF
4	FASTIN1
5	Shield
6	CREF
7	FASTIN2
8	Shield
9	CREF
10	FASTIN3

X8 Power

1	+24V
2	0V
3	Shield
4	+5V out
5	GND
6	+12V out
7	GND
8	-12V out
9	Shield
10	Shield

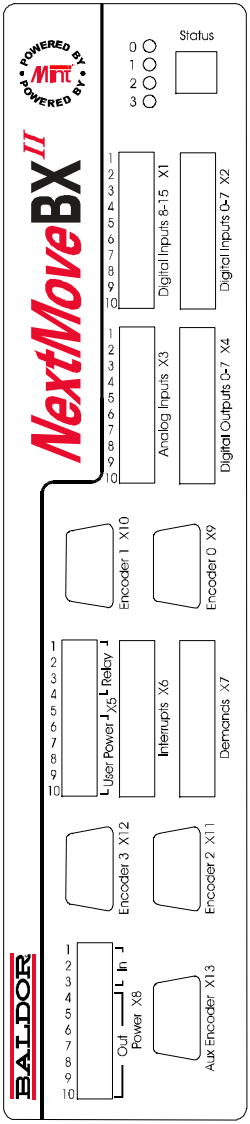

Tightening torque for terminal block connections is 0.25Nm (2.2 lb-in)

X2 Digital Inputs 0-7

1	DIN0
2	DIN1
3	DIN2
4	DIN3
5	DIN4
6	DIN5
7	DIN6
8	DIN7
9	CREF
10	Shield

X4 Digital Outputs 0-7

1	DOUT0
2	DOUT1
3	DOUT2
4	DOUT3
5	DOUT4
6	DOUT5
7	DOUT6
8	DOUT7
9	USR V+
10	CGND

X7 Demands

1	AOUT0
2	AGND
3	AOUT1
4	AGND
5	AOUT2
6	AGND
7	AOUT3
8	AGND
9	AGND
10	Shield

X9 Encoder 0
X10 Encoder 1
X11 Encoder 2
X12 Encoder 3
X13 Aux Encoder

1	CHA+
2	CHB+
3	CHZ+
4	(NC)
5	DGND
6	CHA-
7	CHB-
8	CHZ-
9	+5V out

4.4 Power connections

A 24VDC, 2A supply must be provided to power the control electronics. It is recommended that a separate fused 24V supply is provided for the NextMove BX^{II}. If other devices are likely to be powered from the same 24V supply then a filter (Baldor catalog number FI0014A00) should be installed to isolate the NextMove BX^{II} from the rest of the system.

4.4.1 Power - X8

Location	Connector X8 (Mating connector: Weidmüller BL 3.5/10, 3.5mm pitch)	
Pin	**Name**	**Description**
1	+24V	+24V logic supply input (18-30V)
2	GND	
3	Shield	Shield connection
4	+5V	+5V output
5	GND	
6	+12V	±12V output
7	GND	
8	-12V	
9	Shield	Shield connection
10	Shield	Shield connection
Description Connection point for 24V logic power supply input, 5V output and 12V output.		

Tightening torque for terminal block connections is 0.25Nm (2.2 lb-in)

The power connector X8 provides a connection point for the main customer supplied 24V logic power supply. From this supply, the NextMove BX^{II} creates 5V and 12V supplies for internal and external use.

The 5V supply can be used to supply encoders and external circuits, to a maximum of 650mA. The +5V and GND connections on pins 4 and 5 are connected internally to the +5V and GND pins on connectors X9 to X13.

CAUTION: Encoder power must be connected before operating the system. If the encoders are not powered when the system is enabled, there will be no position feedback. This could cause violent motion of the motor shaft.

The 12V supply can be used to power external circuits, to a maximum of 200mA. However, this supply must not be used to provide power for the digital outputs. For this, a separate supply must be used (see sections 4.6.4 and 4.7.3).

4.5 Analog I/O

The NextMove BX^{II} provides:

- Eight 12-bit resolution analog inputs, available on connector X3.
- Four 14-bit resolution analog outputs, available on connector X7.

Sections 4.5.1 to 4.5.2 describe each analog input and output.

4.5.1 Analog inputs - X3

Location	Connector X6 (Mating connector: Weidmüller BL 3.5/10, 3.5mm pitch)	
Pin	**Name**	**MintMT** `keyword` **/ description**
1	AIN0	`ADC.0`
2	AIN1	`ADC.1`
3	AIN2	`ADC.2`
4	AIN3	`ADC.3`
5	AIN4	`ADC.4`
6	AIN5	`ADC.5`
7	AIN6	`ADC.6`
8	AIN7	`ADC.7`
9	AGND	Analog ground
10	Shield	Shield connection
Description Single ended or differential inputs Voltage range: software selectable 0-5V, ±2.5V, ±10V Resolution: 12-bit with sign (accuracy ±4.9mV @ ±10V input) Input impedance: >20kΩ Sampling interval: 222µs - 2ms		

The Mint keyword `ADCMODE` can be used to setup various configurations for the analog inputs.

- Single ended (`ADCMODE 0`): This is the default configuration. Each input behaves as a single ended, unipolar input with an input range of 0-5V. The input's 0V connection is connected to pin 9, AGND.
- Single ended, bipolar (`ADCMODE 2`): Each input is a single ended, bi-polar input with an input range of ±5V. The input's 0V connection is connected to pin 9, AGND.
- Pseudo differential (`ADCMODE 1`): Inputs are used in pairs (0 and 1, 2 and 3, 4 and 5, 6 and 7) to create four differential inputs. Within each pair, the odd numbered input is the negative input, and the even numbered input is the positive input. The input range is 0 - 5V.

- Pseudo differential, bipolar (ADCMODE 3): Inputs are used in pairs (0 and 1, 2 and 3, 4 and 5, 6 and 7) to create four differential inputs. Within each pair, the odd numbered input is the negative input, and the even numbered input is the positive input. The input range is ±2.5V.
- True differential (ADCMODE 5): Inputs are used in pairs (0 and 1, 2 and 3, 4 and 5, 6 and 7) to create four differential inputs. Within each pair, the odd numbered input is the negative input, and the even numbered input is the positive input. The input range is ±10V.

When an input is selected to operate in any of the paired modes (1, 3 or 5), the other input of the pair is automatically configured to the same mode. The differential input is referenced using the name of the odd numbered input.

ADCMODE 4 can be used to turn off an input. When an input is turned off, the sampling frequency for the other inputs increases proportionately, to a maximum of 4.5kHz for a single active input.

See the Mint help file for full information about ADCMODE and analog input configuration.

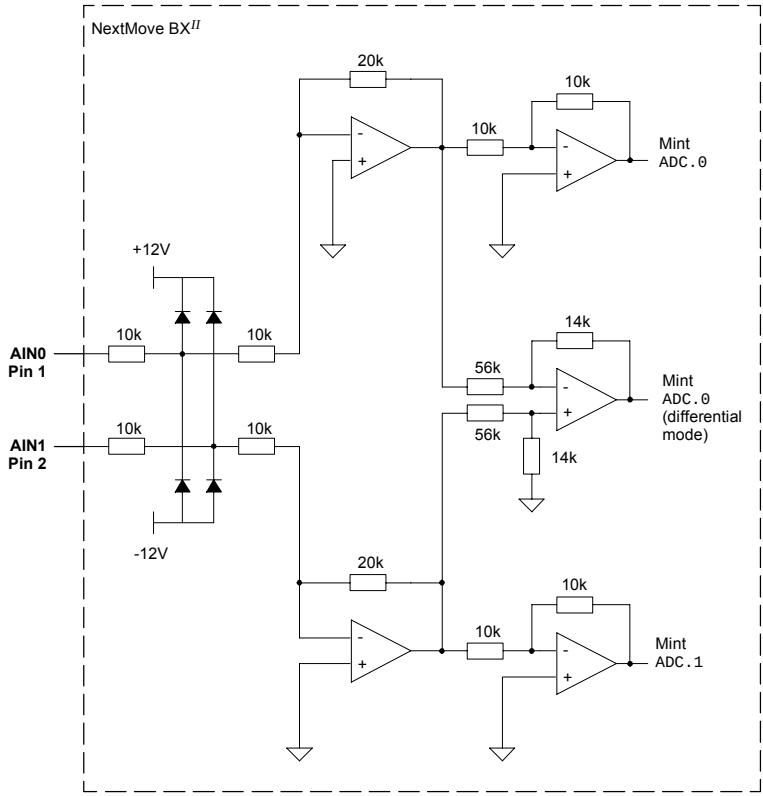

Figure 2 - Analog input circuit, AIN0/AIN1 pair shown

4.5.2 Analog outputs (Demands) - X7

Location	Connector X7 (Mating connector: Weidmüller BL 3.5/10, 3.5mm pitch)	
Pin	**Name**	**MintMT** `keyword` **/ description**
1	Demand0	`DAC.0`
2	AGND	Analog ground
3	Demand1	`DAC.1`
4	AGND	Analog ground
5	Demand2	`DAC.2`
6	AGND	Analog ground
7	Demand3	`DAC.3`
8	AGND	Analog ground
9	AGND	Analog ground
10	Shield	Shield connection

Description
Four independent command outputs
Output range: ±10VDC (±10mV).
Resolution: 14-bit (accuracy ±1.22mV).
Output current: 1mA maximum
Update interval: Immediate

Mint and the Mint Motion Library use the analog outputs to control servo drives.
Demand outputs 0 to 3 correspond to axes 0 to 3. The analog outputs may be used to drive loads of 10kΩ or greater. The outputs are referenced to the internal ground and are not opto-isolated. Shielded twisted pair cable should be used. The shield connection should be made at one end only.

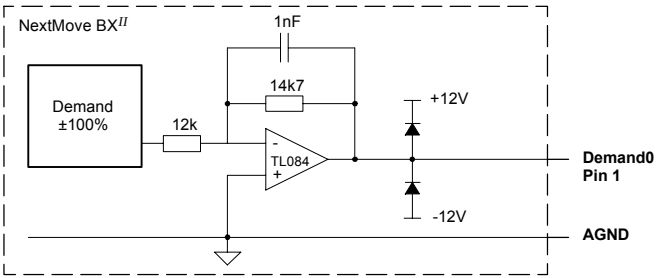

Figure 3 - Analog output circuit - Demand0 shown

4.6 Digital I/O

There are a total of 20 digital inputs. Inputs DIN0 to DIN15 are general purpose inputs, which can be configured in Mint for any of the following functions:

- forward limit (end of travel) input on any axis
- reverse limit (end of travel) input on any axis
- home input on any axis
- drive error input on any axis
- controlled stop input on any axis.

Inputs DIN16 to DIN19 are known as fast position interrrupts and can only be used to latch position. They cannot be used as general purpose inputs and their states cannot be read in Mint.

Inputs can be shared between axes, and are programmable in Mint (using the keywords `INPUTACTIVELEVEL`, `INPUTMODE`, `INPUTPOSTRIGGER` and `INPUTNEGTRIGGER`) to determine their active level and if they should be edge triggered.

There are a 8 general purpose digital outputs. An output can be configured in Mint as a general purpose output, a drive enable output or a general error output. Outputs can be shared between axes and are programmable, using the Mint keyword `OUTPUTACTIVELEVEL`, to determine their active level.

The outputs are driven by a current sourcing, PNP Darlington type driver, with overcurrent and short circuit protection. Power for the outputs is derived from a customer supplied 12-24V supply.

4.6.1 Digital inputs - X1

Location	Connector X1 (Mating connector: Weidmüller BL 3.5/10, 3.5mm pitch)	
Pin	**Name**	**Mint** `keyword` **/ description**
1	DIN8	`INX.8`
2	DIN9	`INX.9`
3	DIN10	`INX.10`
4	DIN11	`INX.11`
5	DIN12	`INX.12`
6	DIN13	`INX.13`
7	DIN14	`INX.14`
8	DIN15	`INX.15`
9	CREF	Common connection
10	Shield	Shield connection
Description Eight general purpose optically isolated AC digital inputs. Sampling interval: 1ms		

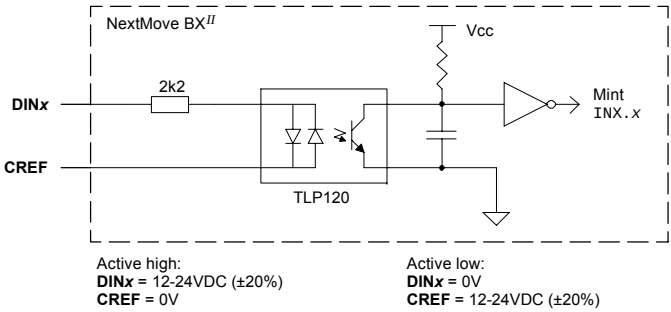

Figure 4 - Digital input circuit

The inputs are conditioned using Schmitt trigger buffers. If an input is configured as edge triggered, the triggering pulse must have a duration of at least 1ms (one software scan) to guarantee acceptance by Mint. The use of shielded cable for inputs is recommended.

Active high: connect +24VDC to the input and 0V to pin 9 (CREF).
The digital inputs will be active when a voltage of +24VDC (greater than 12VDC) is applied to them and will sink a current of approximately 11mA each.

Active low: connect +24VDC to pin 9 (CREF) and 0V to the input.
The digital inputs will be active when grounded (<2V) and will source a maximum of 11mA each.

Note: Sustained input voltages above 28V will damage the inputs.

4.6.2 Digital inputs - X2

Location	Connector X2 (Mating connector: Weidmüller BL 3.5/10, 3.5mm pitch)	
Pin	**Name**	**Mint** `keyword` **/ description**
1	DIN0	`INX.0`
2	DIN1	`INX.1`
3	DIN2	`INX.2`
4	DIN3	`INX.3`
5	DIN4	`INX.4`
6	DIN5	`INX.5`
7	DIN6	`INX.6`
8	DIN7	`INX.7`
9	Common	Common connection
10	Shield	Shield connection
Description Eight general purpose optically isolated AC digital inputs. Sampling interval: 1ms		

The inputs are electrically identical to inputs DIN8 to DIN15 described in section 4.6.1.

4.6.3 Digital inputs (Interrupts) - X6

Digital inputs FASTIN0 to FASTIN3 can be used as high speed position latches, allowing any combination of axes to be captured by the hardware. Using FASTIN0, the latency between input triggering and capture is 30µs. Using FASTIN1 to FASTIN3, latency is 1ms. Special Mint keywords (beginning with the letters `FAST...`) allow specific functions to be performed as a result of fast position inputs becoming active. See the Mint help file for details.

Location	Connector X6 (Mating connector: Weidmüller BL 3.5/10, 3.5mm pitch)	
Pin	**Name**	**Mint** `keyword` **/ description**
1	FASTIN0	`FASTSELECT.0`
2	Shield	Shield connection
3	CREF	Common connection
4	FASTIN1	`FASTSELECT.1`
5	Shield	Shield connection
6	CREF	Common connection
7	FASTIN2	`FASTSELECT.2`
8	Shield	Shield connection
9	CREF	Common connection
10	FASTIN3	`FASTSELECT.3`
Description Four fast position digital inputs.		

Note: The fast inputs are particularly sensitive to noise, so inputs must use shielded twisted pair cable. Do not connect mechanical switches, relay contacts or other sources liable to signal 'bounce' directly to the fast inputs. This could cause unwanted multiple triggering.

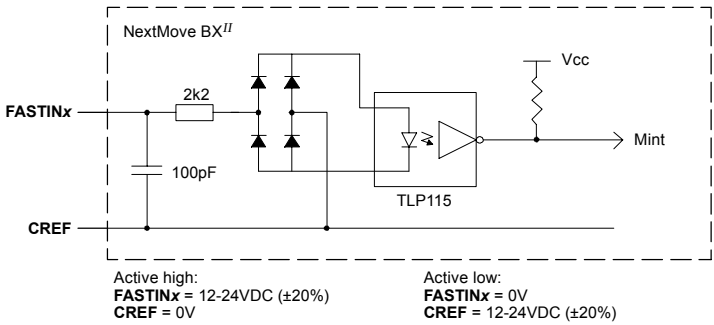

Figure 5 - Digital input circuit - fast interrupts

4.6.4 Digital outputs - X4

Location	Connector X4 (Mating connector: Weidmüller BL 3.5/10, 3.5mm pitch)	
Pin	**Name**	**Mint `keyword` / description**
1	DOUT0	`OUTX.0`
2	DOUT1	`OUTX.1`
3	DOUT2	`OUTX.2`
4	DOUT3	`OUTX.3`
5	DOUT4	`OUTX.4`
6	DOUT5	`OUTX.5`
7	DOUT6	`OUTX.6`
8	DOUT7	`OUTX.7`
9	USR V+	Customer power supply V+
10	CGND	Customer power supply ground
Description Eight general purpose optically isolated digital outputs. Output current: 50mA maximum (continuous) each output Update interval: Immediate		

Each optically isolated output is designed to source current from the customer supplied 12-24V supply (USR V+) as shown in Figure 6. The outputs can be written to directly using the Mint keyword `OUTX` (for example `OUTX.2=1`).
The sense of the outputs can be configured in WorkBench v5, and their states are displayed in the Spy window. The use of shielded cable is recommended.

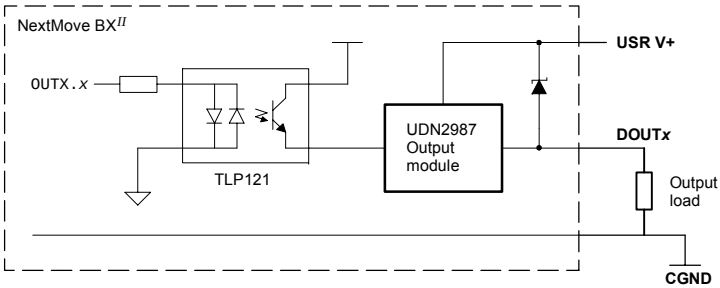

Figure 6 - Digital output circuit

The USR V+ and CGND connections on pins 9 and 10 are connected internally to the USR V+ and CGND pins on connector X5. See section 4.7.3.

4.7 Other I/O

4.7.1 Encoder interfaces - X9, X10, X11, X12, X13

Location	Connectors X9, X11, X11, X12, X13	
Pin	**Name**	**Description**
1	CHA+	Channel A signal
2	CHB+	Channel B signal
3	CHZ+	Index channel signal
4	*(NC)*	Not connected
5	DGND	Power supply ground
6	CHA-	Channel A signal complement
7	CHB-	Channel B signal complement
8	CHZ-	Index channel signal complement
9	+5V out	Power supply to encoder
Description Five identical encoder inputs, each with complementary A, B and Z channel inputs on a 9-pin female D-type connector		

Up to five incremental encoders may be connected to NextMove BX^{II}. The auxiliary (master) encoder (X13) is labeled Aux Encoder. Each input channel enters an AM26LS32AM differential line receiver with pull up resistors and terminators. Encoders must provide 5V single ended or differential signals, or RS422/RS485 differential signals. The use of individually shielded twisted pair cable is recommended. See section 4.4.1 for details of the encoder power supply.

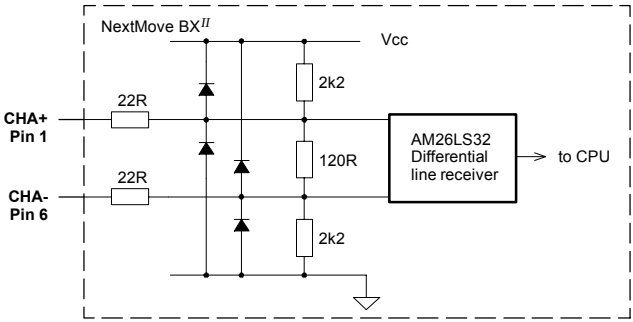

Figure 7 - Encoder channel input circuit - Channel A shown

4.7.2 Encoder input frequency

The maximum encoder input frequency is affected by the length of the encoder cables. The theoretical maximum frequency is 7.5 million quadrature counts per second. This is equivalent to a maximum frequency for the A and B signals of 1.87MHz. However, the effect of cable length is shown in the Table 1:

Encoder Frequency	Maximum cable length	
	meters	feet
1.3MHz	2	6.56
500kHz	10	32.8
250kHz	20	65.6
100kHz	50	164.0
50kHz	100	328.1
20kHz	300	984.2
10kHz	700	2296.6
7kHz	1000	3280.8

Table 1 - Effect of cable length on maximum encoder frequency

The maximum recommended cable length is 30.5m (100ft).

4.7.3 Relay and user power - X5

Location	Connector X5 (Mating connector: Weidmüller BL 3.5/10, 3.5mm pitch)	
Pin	**Name**	**Description**
1	Relay COM	Common relay connection
2	Relay NC	Normally closed relay connection
3	Relay NO	Normally open relay connection
4	Relay COM	Common relay connection
5	USR V+	Digital output customer power supply
6	USR V+	Digital output customer power supply
7	CREF	Digital input common connection
8	CREF	Digital input common connection
9	CGND	Digital output customer power supply ground
10	CGND	Digital output customer power supply ground
Description Connection point for the digital outputs' customer power supply and the relay contacts. Relay rated at 1A, 24VDC		

The relay and user power connector X5 provides a connection point for the internal relay, the customer power supply used to power the digital outputs, and the digital input's common connection. Power connections are assigned two pins to provide increased wiring capacity. The USR V+ and CGND connections on pins 5/6 and 9/10 are connected internally to the USR V+ and CGND pins on connector X4 - see section 4.6.4.

The relay outputs are isolated from any internal circuits in the NextMove BX^{II}. The relay is controlled by a latch, which is cleared when the NextMove BX^{II} resets. Reset can occur due to power-down, a watchdog error or when deliberately caused by the host PC. In normal operation the relay is energized and the Relay NC contact is connected to Relay COM. In the event of an error or power loss, the relay is de-energized and the Relay NO contact is connected to Relay COM.

The relay can be configured as a global error output using the Mint keyword `GLOBALERROROUTPUT`.

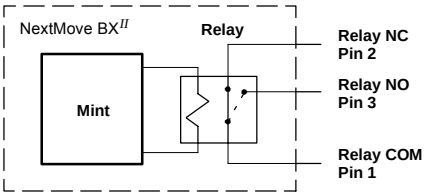

Figure 8 - Relay connections

4.7.4 RS232 - X15

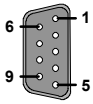

Location	Top panel, connector X15
Pin	**Name**
1	Shield
2	RXD
3	TXD
4	DTR (internally connected to pin 6)
5	0V
6	DSR (internally connected to pin 4)
7	RTS
8	CTS
9	0V
Description RS232 connections on a single 9-pin male D-type connector	

The NextMove BX^{II} has a full-duplex RS232 serial port with the following preset configuration:

- 9600 baud
- 1 start bit
- 8 data bits
- 1 stop bit
- No parity
- Hardware handshaking lines (RS232) RTS and CTS must be connected.

The configuration can be changed using the Mint keyword `SERIALBAUD`. It is stored in EEPROM and restored at power up.

The port is configured as a DTE (Data Terminal Equipment) unit so it is possible to operate the controller with any DCE (Data Communications Equipment) or DTE equipment. Full duplex transmission with hardware handshaking is supported.

Only the TXD, RXD and 0V GND connections are essential for communication, although hardware handshaking will not be supported unless the other connections are made.

Both the output and input circuitry are single ended and operate between ±12V. The port is capable of operation at up to 57.6Kbaud.

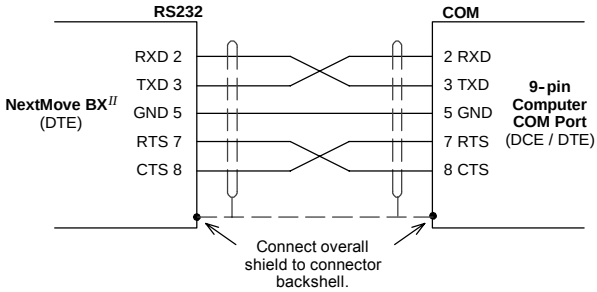

Figure 9 - RS232 serial port connections

The maximum recommended cable length is 3m (10ft) at 57.6Kbaud. When using lower baud rates, longer cable lengths may be used up to maximum of 15m (49ft) at 9600 baud.

4.7.5 Connecting Baldor HMI Operator Panels

Baldor HMI Operator Panels use a 15-pin male D-type connector (marked PLC PORT), but the NextMove BX^{II} RS232 connector is a 9-pin male D-type connector. If you do not require hardware handshaking then use the connections shown in Figure 10:

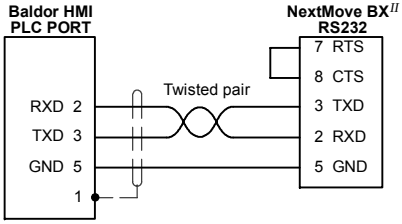

Figure 10 - Cable wiring if hardware handshaking is *not* required

If hardware handshaking is required then use the connections shown in Figure 11:

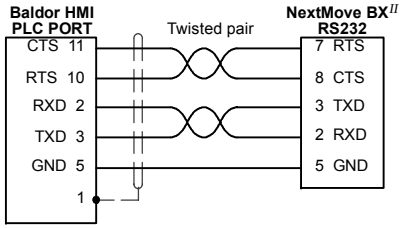

Figure 11 - Cable wiring if hardware handshaking *is* required

4.7.6 RS422 / RS485 - X14

If you will be using RS422 / RS485 and your PC does not have an RS422 / RS485 connector, an RS232 to 4-wire RS422 / RS485 converter will be required. These commercially available devices convert the signals from the PC RS232 port to the signals necessary for RS422 / RS485 communications. Special care must be taken with the pin assignment on all RS422 / RS485 devices, as this can differ between products. Connectors might need to be rewired to provide the correct pin assignment.

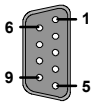

Location	Top panel, connector X14
Pin	**Name**
1	Shield
2	RX+ (input)
3	TX+ (output)
4	*(NC)*
5	GND
6	*(NC)*
7	TX- (output)
8	RX- (input)
9	GND
Description RS422 / RS485 connections on a 9-pin male D-type connector	

This port provides 4-wire RS422 / RS485 connections. The port can be used for multidrop applications operating at 9600 or 19200 baud. The configuration can be changed using the Mint keyword `SERIALBAUD`. It is stored in EEPROM and restored at power up.

Both the output and input circuitry are differential and operate between 0 and 5V.

Multidrop systems allow one device to act as a ‘network master’, controlling and interacting with the other (slave) devices on the network. The network master can be a controller such as a NextMove BX^{II}, a host application such as WorkBench v5 (or other custom application), or a programmable logic controller (PLC).

The NextMove BX^{II} supports up to 15 devices, each having its own address (node) number to uniquely identify it on the network. The address of the NextMove BX^{II} can be configured using the Mint keyword `NODE`. It is stored in EEPROM and restored at power up.

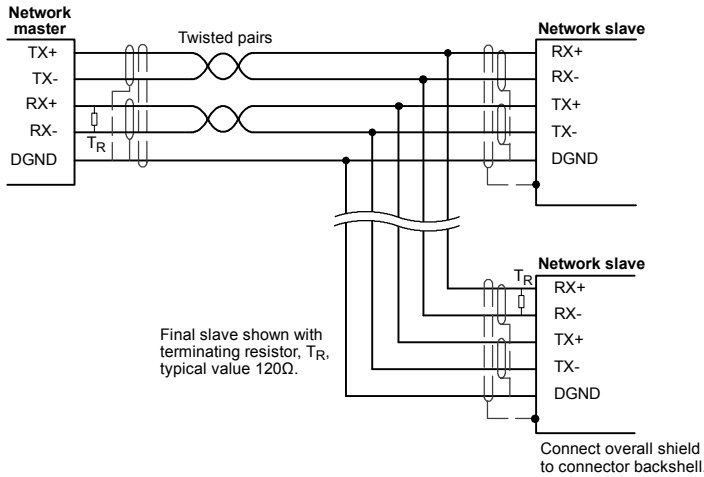

Figure 12 - 4-wire RS485 multi-drop connections

Each TX/RX network requires a termination resistor at the final RX connection, but intermediate devices must not be fitted with termination resistors. An exception is where repeaters are being used which may correctly contain termination resistors.

Termination resistors are used to match the impedance of the load to the impedance of the transmission line (cable) being used. Unmatched impedance causes the transmitted signal to not be fully absorbed by the load. This causes a portion of the signal to be reflected back into the transmission line as noise. If the source impedance, transmission line impedance, and load impedance are all equal, the reflections (noise) are eliminated. Termination resistors increase the load current and sometimes change the bias requirements and increase the complexity of the system.

4.7.7 CAN connectors - X16 & X17

CAN (Controller Area Network) offers very reliable serial communications over a two wire twisted pair cable. In an industrial environment, the probability of an undetected error is 4.7×10^{-11}. CAN also offers high speed data transfer (up to 1Mbit/s, dependent on bus length) and low cost multiplex wiring schemes. CAN is optimized for the transmission of small data packets and therefore offers fast update of I/O devices (peripherals) connected to the bus. The CAN network allows several CAN peripheral devices to be attached to the same controller.

The CAN connectors provide access to CANopen (CAN1) and Baldor CAN (CAN2) busses on two separate connectors. Both busses are available on both connectors to simplify "daisy-chaining" of peripherals.

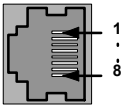

Location	Top panel, connectors X16 & X17	
Pin	**Name**	**Description**
1	CAN1+	CANopen
2	CAN1-	CANopen
3	*(NC)*	Not connected
4	CAN 0V	Ground/earth reference for CAN signals
5	CAN V+	CAN remote node power V+ (12-24V)
6	*(NC)*	Not connected
7	CAN2+	Baldor CAN
8	CAN2-	Baldor CAN
Description CAN interfaces using RJ45 connectors.		

Correct operation of CAN can only be achieved with screened/shielded twisted-pair cabling. CAN1+ / CAN1- and CAN2+ / CAN2- must form twisted pairs with the shield connected to the connector backshell, as shown in Figure 13. A range of suitable CAN cables are available from Baldor, with catalog numbers beginning CBL004-5...

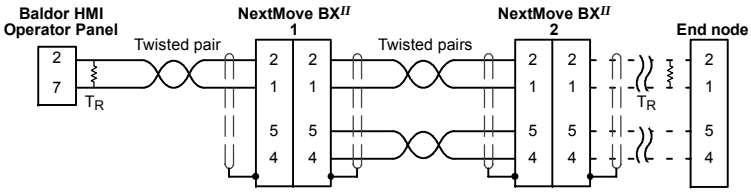

Figure 13 - Typical CAN network connections

4.7.8 CANopen

CANopen is a networking system based on the serial bus CAN. It uses the international CAN standard ISO 11898 as the basis for communication. The Mint firmware implements a CANopen protocol on CAN bus 1, based on the 'Communication Profile' CiA DS-301, which supports both direct access to device parameters and time-critical process data communication. This provides support for a range of Baldor and third-party devices.

The CANopen channel is available on both CAN connectors.

The default baud rate is 500Kbit/s, but this can be changed using the Mint keyword CANBAUD. It is stored in EEPROM and restored at power up.

CAN1 must be terminated by a 120Ω resistor connected between CAN1+ and CAN1- at both ends of the network and nowhere else. If the NextMove BX^{II} is at the end of the network then ensure that CAN jumper 1 (accessible on the top panel) is fitted.

4.7.9 Baldor CAN

Baldor CAN is also a networking system based on the serial bus CAN. It uses the international CAN standard ISO 11898 as the basis for communication. The Mint firmware implements a proprietary Baldor protocol on CAN bus 2, based on CAL, which supports both direct access to device parameters and time-critical process data communication. This provides support for the full range of Baldor ioNode CAN peripherals.

The Baldor CAN channel is available on both CAN connectors.

The default baud rate is 125Kbit/s, but this can be changed using the Mint keyword CANBAUD. It is stored in EEPROM and restored at power up.

CAN2 must be terminated by a 120Ω resistor connected between CAN2+ and CAN2- at both ends of the network and nowhere else. If the NextMove BX^{II} is at the end of the network then ensure that the CAN jumper 2 (accessible on the top panel) is fitted.

On the ioNode peripheral, jumpers JP1 and JP2 must be in the CAN Bus 2 position to select pins 7 & 8 for CAN traffic.

4.8 Reset states

During power up, NextMove BX^{II} is held in a safe non-operational state known as hardware reset. It will also go into hardware reset if the 24V logic supply drops below approximately 18V. This prevents uncontrolled operation due to the electronics losing power. When NextMove BX^{II} is in hardware reset for any reason, most of the controlled interfaces fall into known states.

It is also possible for NextMove BX^{II} to be in a state known as software reset. This is a safe operational state where only the bootloader present on NextMove BX^{II} is running, because no valid firmware has been found. This can happen if a firmware download is cancelled before it has finished. Use WorkBench v5 to download new firmware, allowing the process to finish. This might take 1-2 minutes.

Hardware and software reset states should not be confused with the Mint keyword `RESET` which is used to clear axis errors.

Communications
At power up the CAN controllers will be held in reset and will have no effect on the CAN buses. If a reset occurs during the transmission of a message CAN errors are likely to occur.

Digital Outputs
All of the digital outputs are inactive on power up regardless of their polarity. They will return to the inactive state whenever a reset occurs.

Analog Outputs
All analog outputs are set to 0V by hardware during power up and will return to 0V on a reset.

Encoders
The encoder interfaces will not register any encoder input during reset. If the unit goes into reset all position data will be lost.

4.8.1 System watchdog

The system watchdog provides hardware protection in the event of a firmware or ‘C’ program malfunction. If the system watchdog is not updated, the controller will be reset.

4.9 Connection summary - minimum system wiring

As a guide, Figure 14 shows an example of the typical minimum wiring required to allow the NextMove BX^{II} and a single servo amplifier (motor drive) to work together.

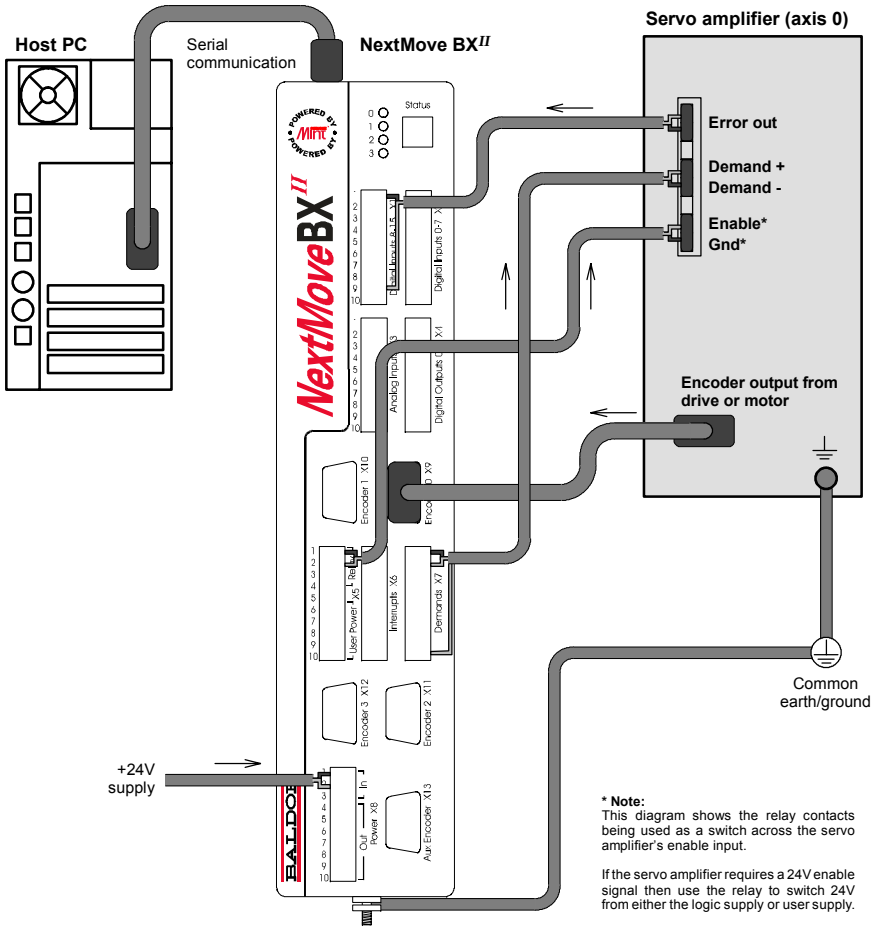

Figure 14 - Example minimum system wiring - Axis 0

Each connection is described in Table 2.

NextMove BX^{II} connector	Name of signal	Function	Servo amplifier connection (Note: drive may be labelled differently)
X1	DIN8	Error input	Error output
X5	Relay COM	Common connection of relay	Enable input
	Relay NC	Normally closed connection of relay	Ground
X7	Demand0	Command signal for axis 0	Demand+ input
	AGND	Reference for analog signals	Demand- input
	Shield	Cable shield	(Not connected)
X9	(Encoder 0)	Position feedback for axis 0	Encoder out (or direct from motor)
X8	+24V	Logic supply +24V	
	0V	Logic supply 0V	

Table 2 - Minimum system wiring connections

5.1 Introduction

Before powering the NextMove BX^{II} you will need to connect it to the PC using a serial cable and install the supplied PC software *WorkBench v5*. This software includes a number of tools to allow you to configure, tune and program the NextMove BX^{II}. If you do not have experience of software installation or Windows applications you may need further assistance for this stage of the installation

5.1.1 Connecting the NextMove BX^{II} to the PC

Connect the serial cable between a PC serial port (often labeled as “COM”) to the NextMove BX^{II} RS232 connector. WorkBench v5 can scan all the COM ports, so you can use any port.

5.1.2 Installing the software

The CDROM containing the software can be found separately within the packaging.

1. Insert the CDROM into the drive.
2. After a few seconds the setup wizard should start automatically. If the setup wizard does not appear, select Run... from the Windows Start menu and type

   d:\start

   where **d** represents the drive letter of the CDROM device (use the correct letter for your installation).

   Follow the on-screen instructions to install WorkBench v5. The setup wizard will copy the files to appropriate folders on the hard drive. The default folder is C:\Program Files\Baldor\MintMT, although this can be changed during setup.

5.1.3 Starting the NextMove BX^{II}

If you have followed the instructions in the previous sections, you should have now connected all the power sources, your choice of inputs and outputs and the serial cable linking the PC with the NextMove BX^{II}.

5.1.4 Preliminary checks

Before you apply power for the first time, it is very important to verify the following:

- Disconnect the load from the motor until instructed to apply a load.
- Inspect all power connections for accuracy, workmanship and tightness.
- Verify that all wiring conforms to applicable codes.
- Verify that the NextMove BX^{II} is properly earthed/grounded.
- Check all signal wiring for accuracy.

5.1.5 Power on checks

If at any time one of the Axis LEDs is illuminated red, this indicates that the NextMove BX^{II} has detected a fault - see section 6.

1. Turn on the 24VDC supply.

2. After a brief test sequence the Status display should show the node number, for example 2 (the factory preset). If the display is not lit then re-check the power supply connections.

The NextMove BX^{II} is now ready to be configured using WorkBench v5.

5.2 WorkBench v5

WorkBench v5 is a fully featured application for programming and controlling the NextMove BX^{II}. The main WorkBench v5 window contains a menu system, the Toolbox and other toolbars. Many functions can be accessed from the menu or by clicking a button - use whichever you prefer. Most buttons include a 'tool-tip'; hold the mouse pointer over the button (don't click) and its description will appear.

5.2.1 Help file

WorkBench v5 includes a comprehensive help file that contains information about every Mint keyword, how to use WorkBench v5 and background information on motion control topics. The help file can be displayed at any time by pressing F1. On the left of the help window, the Contents tab shows the tree structure of the help file. Each book contains a number of topics. The Index tab provides an alphabetic list of all topics in the file, and allows you to search for them by name. The Search tab allows you to search for words or phrases appearing anywhere in the help file. Many words and phrases are underlined and highlighted with a color (normally blue) to show that they are links. Just click on the link to go to an associated keyword. Most keyword topics begin with a list of relevant *See Also* links.

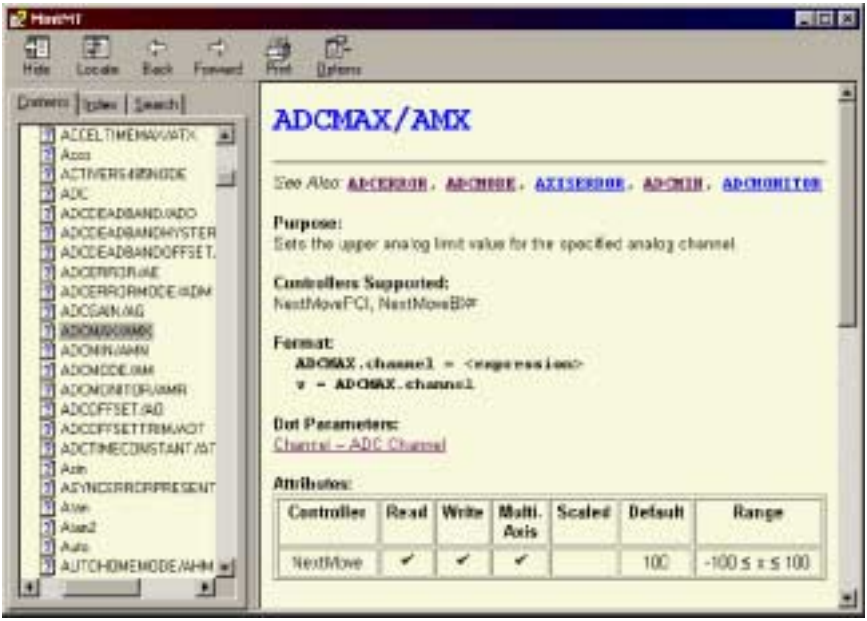

Figure 15 - The WorkBench v5 help file

For help on using WorkBench v5, click the **Contents** tab, then click the small plus sign ⊞ beside the **WorkBench v5** book icon. Double click a topic name to display it.

5.2.2 Starting WorkBench v5

1. On the Windows **Start** menu, select Programs, WorkBench v5, WorkBench v5.

   WorkBench v5 will start, and the Tip of the Day dialog will be displayed.

   You can prevent the Tip of the Day dialog appearing next time by removing the check mark next to Show tips at startup.

   Click **Close** to continue.

2. In the opening dialog box, click **Start New Project...** .

3. In the Select Controller dialog, go to the drop down box near the top and select the PC serial port to which the NextMove BX^{II} is connected.

   (If you are unsure which PC serial port is connected to the NextMove BX^{II}, select **Scan all serial ports**. During the detection process, a dialog box may be displayed to tell you that WorkBench v5 has detected new firmware. Click **OK** to continue.)

   Click **Scan** to search for the NextMove BX^{II}.

   When the search is complete, click on NextMove BX^{II} in the list to highlight it, and click the **Select** button.

Note: If the NextMove BX^{II} is not listed, check the serial lead between the NextMove BX^{II} and the PC. Check that the NextMove BX^{II} is powered correctly. Click **Scan** to re-scan the ports.

When detection is complete, Fine-tuning mode will be displayed.

5.3 Configuring an axis

The NextMove BX^{II} is capable of controlling up to 4 servo axes, depending on model. Axis numbering always begin at 0. For example, a four axis model has axes numbered 0, 1, 2 and 3. This section describes the basic setup for a single axis.

Note: The NextMove BX^{II} is also capable of controlling up to 4 'virtual' axes. A virtual axis allows most Mint commands to be executed as normal, with the virtual axis simulating position and velocity information for any motion performed. No physical axes are moved.

5.3.1 Selecting a scale

Mint defines all positional and speed related motion keywords in terms of encoder quadrature counts (for servo motors). The number of quadrature counts is divided by the `SCALE` factor allowing you to use units more suitable for your application. The unit defined by setting a value for scale is called the *user unit* (uu).

Consider a motor with a 1000 line encoder. This provides 4000 quadrature counts for each revolution. If `SCALE` is not set, a Mint command that involves distance, speed, or acceleration may need to use a large number to specify a significant move. For example `MOVER=16000` (Move Relative) would rotate the motor by 16000 quadrature counts - only four revolutions. By setting a `SCALE` factor of 4000, the user unit becomes revolutions. The more understandable command `MOVER=4` could now be used to move the motor four revolutions.

In applications involving linear motion a suitable value for `SCALE` would allow commands to express values in linear distance, for example inches, feet or millimetres.

1. In the Toolbox, click **Setup**, then click the Parameters icon.

2. Click the Scale tab.

3. Click in the Axis drop down box to select the axis.

   Each axis can have a different scale if required.

4. Click in the Scale box and type a value.

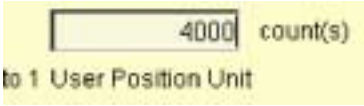

5. Click **Apply**.

   This immediately sets the scaling factor for the selected axis. It will remain in the NextMove BX^{II} until another scale is defined, or power is removed.

5.3.2 Setting the drive enable output

The drive enable output allows NextMove BX^{II} to disable the drive in the event of an error. Each axis can be configured with its own drive enable output, or can share an output with other axes. If an output is shared, an error on any of the axes sharing the output will cause all of them to be disabled.

The drive enable output can either be a digital output or the relay.

1. In the Toolbox, click the Digital I/O icon.

2. At the bottom of the Digital I/O screen, click the **Digital Outputs** tab.

   The left of the screen shows two yellow icons, High and Low. These describe how the output should behave when activated (to enable the axis).

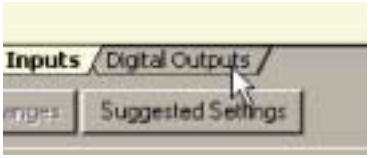

3. If you are going to use the relay, ignore this step and go straight to step 4.

   If you are going to use a digital output, drag the appropriate yellow icon to the grey OUT icon that will be used as the drive enable output. Its color will change to bright blue.

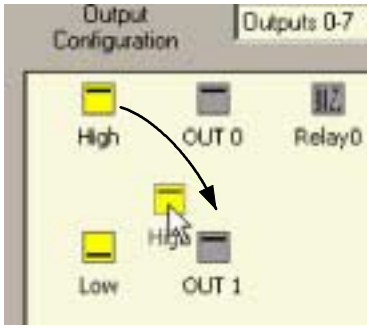

4. If you are going to use the relay, drag the grey Relay0 icon to the grey X axis icon on the right of the screen. To configure multiple axes to use the relay, repeat this step for the other axes.

   If you are using a digital output, drag the bright blue OUT icon to the grey X axis icon on the right of the screen. To configure multiple axes with the same drive enable output, repeat this step for the other axes.

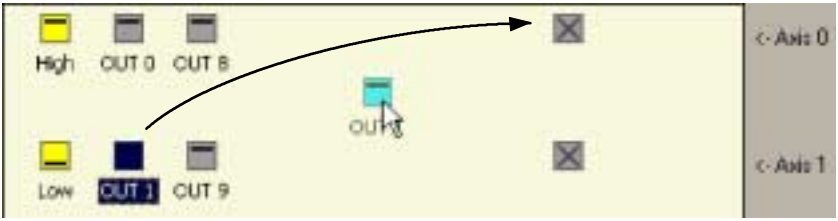

5. Click **Apply** at the bottom of the screen. This sends the output configuration to the NextMove BX^{II}.

5.3.3 Testing the drive enable output

1. On the main WorkBench v5 toolbar, click the Drive enable button. Click the button again. Each time you click the button, the drive enable output is toggled.

   When the button is in the pressed (down) position the drive should be enabled. When the button is in the raised (up) position the drive should be disabled.

   If this is not working, or the action of the button is reversed, check the electrical connections between the NextMove BX^{II} and the drive. If you are using the relay output, check that you are using the correct normally open or normally closed connection.

   If you are using a digital output, check that it is using the correct high or low output expected by the drive.

5.4 Testing and tuning

This section describes the method for testing and tuning an axis.

5.4.1 Testing the drive command output

This section tests the operation and direction of the axis command output. It is recommended that the motor is disconnected for this test.

1. Check that the Drive enable button is pressed (down).

2. In the Toolbox, click **Application** then click the Edit & Debug icon.

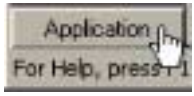

3. Click in the Command window.

4. Type:
   `TORQUE.0=5`

   where 0 is the axis (demand output) to be tested. In this example, this should cause a demand of +5% of maximum output (0.5V) to be produced at the Demand0 output (connector X7, pin 1). See section 4.5.2 for details of the demand outputs. In WorkBench v5, look at the Spy window located on the right of the screen. The virtual LED Command display should show 5 (approximately). If there seems to be no command output, check the electrical connections between the NextMove BX^{II} and the drive.

5. To repeat the tests for negative (reverse) demands, type:
   `TORQUE.0=-5`

   This should cause a demand of -5% of maximum output (-0.5V) to be produced at the Demand0 output.

6. To remove the demand and stop the test, type:
   `STOP.0`

   This should cause the demand produced at the Demand0 output to become 0V.

5.5 An introduction to closed loop control

This section describes the basic principles of closed loop control. If you are familiar with closed loop control go straight to section 5.6.1.

When there is a requirement to move an axis, the NextMove BX^{II} control software translates this into a demand output voltage. This is used to control the drive (servo amplifier) which powers the motor. An encoder or resolver on the motor is used to measure the motor's position. Every 1ms (adjustable using the `LOOPTIME` keyword) the NextMove BX^{II} compares the demanded and measured positions. It then calculates the demand needed to minimize the difference between them, known as the **following error**.

This system of constant measurement and correction is known as closed loop control.
[*For the analogy, imagine you are in your car waiting at an intersection. You are going to go straight on when the lights change, just like the car standing next to you which is called* Demand. *You're not going to race* Demand *though - your job as the controller (NextMove BX^{II}) is to stay exactly level with* Demand, *looking out of the window to measure your position*].

The main term that the NextMove BX^{II} uses to correct the error is called **Proportional gain** (**KPROP**). A very simple proportional controller would simply multiply the amount of error by the Proportional gain and apply the result to the motor [*the further* Demand *gets ahead or behind you, the more you press or release the gas pedal*].

If the Proportional gain is set too high overshoot will occur, resulting in the motor vibrating back and forth around the desired position before it settles [*you press the gas pedal so hard you go right past* Demand. *To try and stay level you ease off the gas, but end up falling behind a little. You keep repeating this and after a few tries you end up level with* Demand, *travelling at a steady speed. This is what you wanted to do but it has taken you a long time*].
If the Proportional gain is increased still further, the system becomes unstable [*you keep pressing and then letting off the gas pedal so hard you never travel at a steady speed*].

To reduce the onset of instability, a term called **Velocity Feedback gain** (**KVEL**) is used. This resists rapid movement of the motor and allows the Proportional gain to be set higher before vibration starts. Another term called **Derivative gain** (**KDERIV**) can also be used to give a similar effect.

With Proportional gain and Velocity Feedback gain (or Derivative gain) it is possible for a motor to come to a stop with a small following error [Demand *stopped so you stopped too, but not quite level*]. The NextMove BX^{II} tries to correct the error, but because the error is so small the amount of torque demanded might not be enough to overcome friction.

In this situation, a term called **Integral gain** (**KINT**) can be used. This sums the error over time, so that the motor torque is gradually increased until the positional error is reduced to zero [*like a person gradually pushing harder and harder on your car until they've pushed it level with* Demand]. However, if there is large load on the motor (it is supporting a heavy suspended weight for example), it is possible for the output to increase to 100% demand. This effect can be limited using the `KINTLIMIT` keyword which limits the effect of KINT to a given percentage of the demand output. Another keyword called `KINTMODE` can even turn off integral action when it's not needed.

The remaining gain terms are **Velocity Feed forward** (**KVELFF**) and **Acceleration Feed forward** (**KACCEL**).

In summary, the following rules can be used as a guide:

- KPROP: Increasing KPROP will speed up the response and reduce the effect of disturbances and load variations. The side effect of increasing KPROP is that it also increases the overshoot, and if set too high it will cause the system to become unstable. The aim is to set the Proportional gain as high as possible without getting overshoot, instability or hunting on an encoder edge when stationary (the motor will buzz).
- KVEL: This gain has a damping effect, and can be increased to reduce any overshoot. If KVEL becomes too large it will amplify any noise on the velocity measurement and introduce oscillations.
- KINT: This gain has a de-stabilizing effect, but a small amount can be used to reduce any steady state errors. By default, KINTMODE is set so that the KINT term is either ignored, or is only applied during periods of constant velocity.
- KINTLIMIT: The integration limit determines the maximum value of the effect of integral action. This is specified as a percentage of the full scale demand.
- KDERIV: This gain has a damping effect. The Derivative action has the same effect as the velocity feedback if the velocity feedback and feedforward terms are equal.
- KVELFF: This is a feed forward term and as such has a different effect on the servo system than the previous gains. KVELFF is outside the closed loop and therefore does not have an effect on system stability. This gain allows a faster response to demand speed changes with lower following errors, for example you would increase KVELFF to reduce the following error during the slew section of a trapezoidal move. The trapezoidal test move can be used to fine-tune this gain. This term is especially useful with velocity controlled servos
- KACCEL: This term is designed to reduce velocity overshoots on high acceleration moves. Due to the quantization of the positional data and the speed of the servo loop, for the acceleration feed forward term to affect the servo loop the acceleration of the axis must exceed 1,000,000 encoder counts per second.

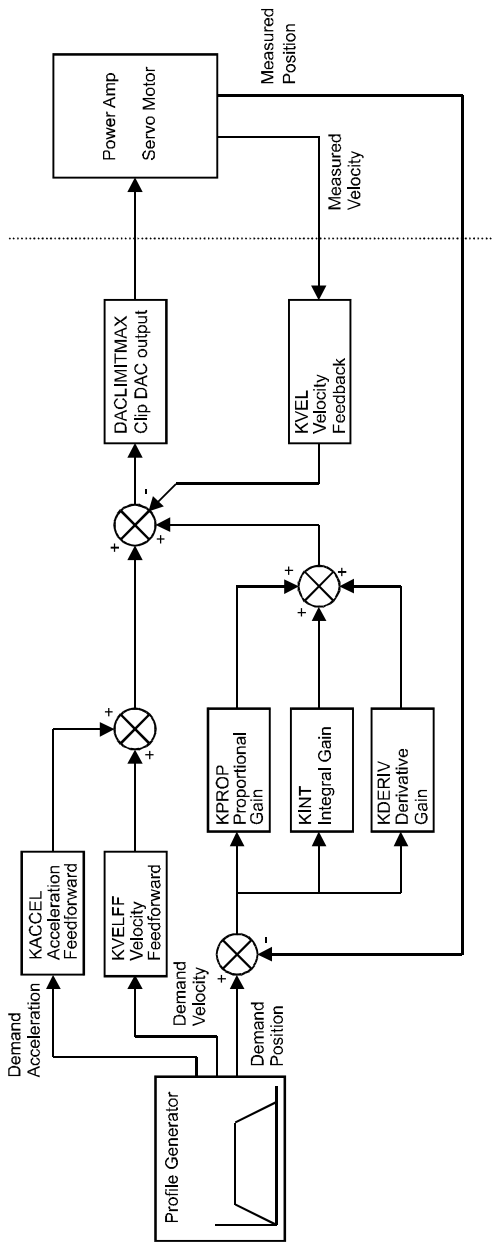

Figure 16 - The NextMove BX^{II} servo loop

5.6 Tuning an axis for current control

5.6.1 Selecting servo loop gains

All servo loop parameters default to zero, meaning that the demand output will be zero at power up. Most servo amplifiers can be set to current (torque) control mode or velocity control mode; check that the servo amplifier will operate in the correct mode. The procedure for setting system gains differs slightly for each. To tune an axis for velocity control, go straight to section 5.8. It is recommended that the system is initially tested and tuned with the motor shaft disconnected from other machinery.

Note: The method explained in this section should allow you to gain good control of the motor, but will not necessarily provide the optimum response without further fine-tuning. Unavoidably, this requires a good understanding of the effect of the gain terms.

1. In the Toolbox, click the Fine-tuning icon.

   The Fine-tuning window is displayed at the right of the screen. The main area of the WorkBench v5 window displays the Capture window. When tuning tests are performed, this will display a graph representing the response.

2. In the Fine-tuning window, click in the KDERIV box and enter a starting value of 1.

   Click **Apply** and then turn the motor shaft by hand. Repeat this process, slowly increasing the value of KDERIV until you begin to feel some resistance in the motor shaft. The exact value of KDERIV is not critical at this stage.

3. Click in the KPROP box and enter a value that is approximately one quarter of the value of KDERIV. If the motor begins to vibrate, decrease the value of KPROP or increase the value of KDERIV until the vibration stops. Small changes may be all that is necessary.

4. In the Move Type drop down box, check that the move type is set to Step.

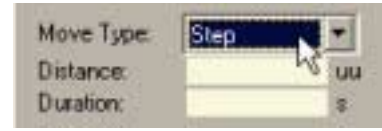

5. Click in the Distance box and enter a distance for the step move. It is recommended to set a value that will cause the motor to turn a short distance, for example one revolution.

Note:
The distance depends on the scale set in section 5.3.1. If you set a scale so that units could be expressed in revolutions (or other unit of your choice), then those are the units that will be used here. If you did not set a scale, the amount you enter will be in encoder quadrature counts.

6. Click in the Duration box and enter a duration for the move, in seconds. This should be a short duration, for example 0.15 seconds.

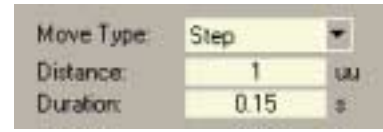

7. Click **Go**.

The NextMove BX^{II} will perform the move and the motor will turn. As the soon as the move is completed, WorkBench v5 will download captured data from the NextMove BX^{II}. The data will then be displayed in the Capture window as a graph.

Note: The graphs that you see will not look exactly the same as the graphs shown here! Remember that each motor has a slightly different response.

8. Using the check boxes below the graph, select the traces you require, for example Demand position and Measured position.

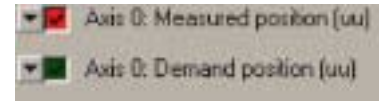

5.6.2 Underdamped response

If the graph shows that the response is underdamped (it overshoots the demand, as shown in Figure 17) then the value for KDERIV should be increased to add extra damping to the move. If the overshoot is excessive or oscillation has occurred, it may be necessary to reduce the value of KPROP.

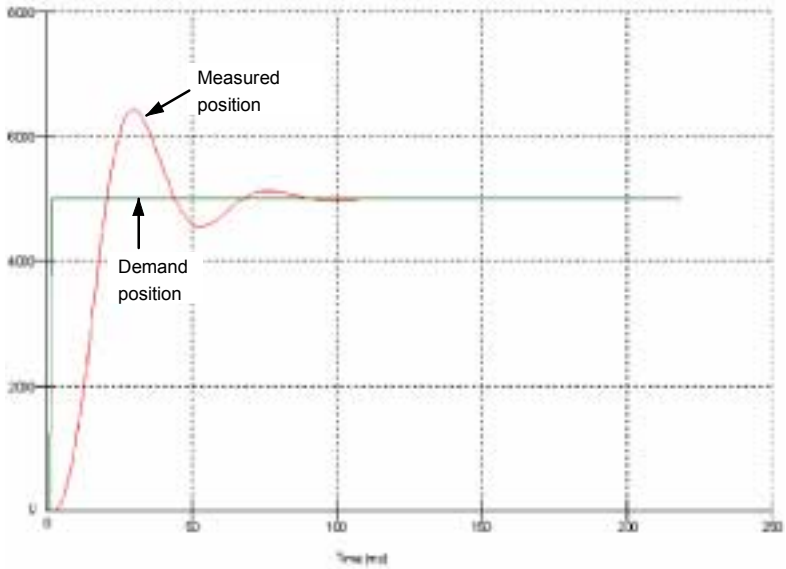

Figure 17 - Underdamped response

9. Click in the KDERIV and/or KPROP boxes and make the required changes. The ideal response is shown in section 5.6.4.

5.6.3 Overdamped response

If the graph shows that the response is overdamped (it reaches the demand too slowly, as shown in Figure 18) then the value for KDERIV should be decreased to reduce the damping of the move. If the overdamping is excessive, it may be necessary to increase the value of KPROP.

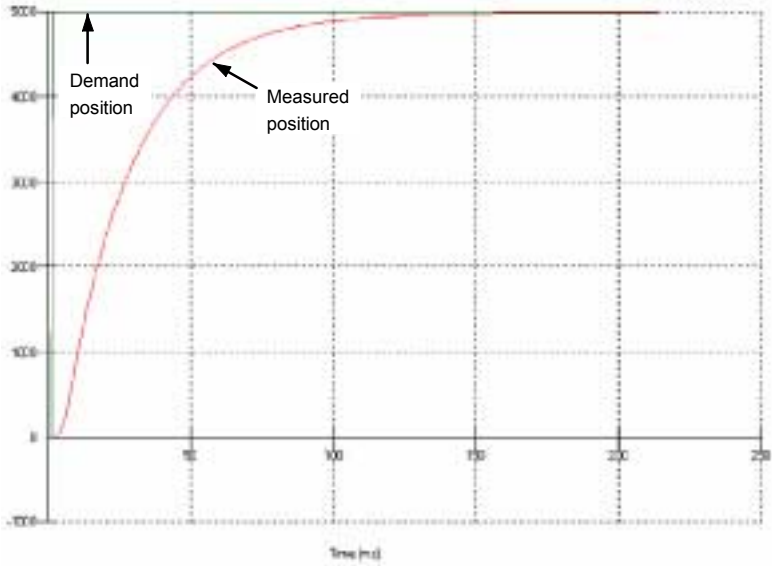

Figure 18 - Overdamped response

10. Click in the KDERIV and/or KPROP boxes and make the required changes. The ideal response is shown in section 5.6.4.

5.6.4 Critically damped response

If the graph shows that the response reaches the demand quickly and only overshoots the demand by a small amount, this can be considered an ideal response for most systems. See Figure 19.

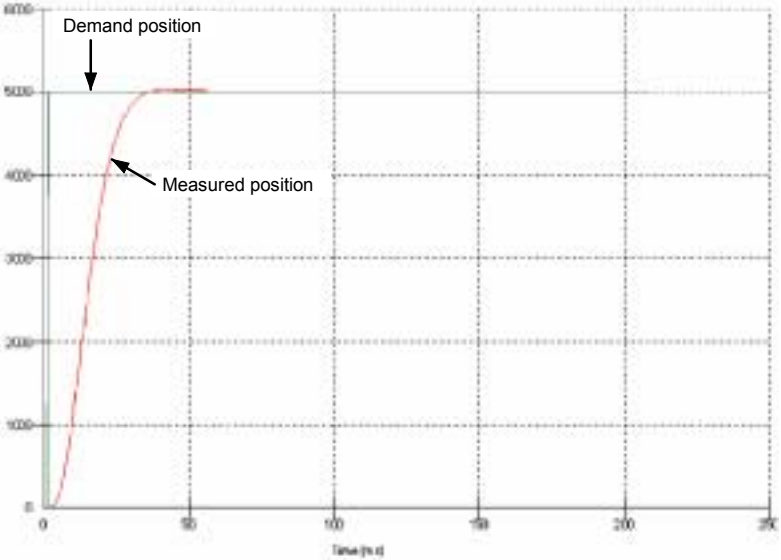

Figure 19 - Critically damped (ideal) response

5.7 Eliminating steady-state errors

In systems where precise positioning accuracy is required, it is often necessary to position within one encoder count. The proportional gain, KPROP, is not normally able to achieve this because a very small following error will only produce a small demand for the drive which may not be enough to overcome mechanical friction (this is particularly true in current controlled systems). This error can be overcome by applying integral gain.

The integral gain, KINT, works by accumulating following error over time to produce a demand sufficient to move the motor into the required position with zero following error. KINT can therefore overcome errors caused by gravitational effects such as vertically moving linear tables. With current controlled drives a non-zero demand output is required to hold the load in the correct position, to achieve zero following error.

Care is required when setting KINT since a high value will cause instability during moves. A typical value for KINT would be 0.1. The effect of KINT should also be limited by setting the integration limit, KINTLIMIT, to the smallest possible value that is sufficient to overcome friction or static loads, for example 5. This will limit the contribution of the integral term to 5% of the full DAC output range.

1. Click in the KINT box and enter a small starting value, for example 0.1.

2. Click in the KINTLIMIT box and enter a value of 5.

With NextMove BX^{II}, the action of KINT and KINTLIMIT can be set to operate in various modes:

- Never - the KINT term is never applied
- Always - the KINT term is always applied
- Smart - the KINT term is only applied when the demand is zero or constant.

This function can be selected using the KINTMODE drop down box.

5.8 Tuning an axis for velocity control

Drives designed for velocity control incorporate their own velocity feedback term to provide system damping. For this reason, KDERIV (and KVEL) can be set to zero.

Correct setting of the velocity feed forward gain KVELFF is important to get the optimum response from the system. The velocity feed forward term takes the instantaneous velocity demand from the profile generator and adds this to the output block (see Figure 16). KVELFF is outside the closed loop and therefore does not have an effect on system stability. This means that the term can be increased to maximum without causing the motor to oscillate, provided that other terms are setup correctly.

When setup correctly, KVELFF will cause the motor to move at the speed demanded by the profile generator. This is true without the other terms in the closed loop doing anything except compensating for small errors in the position of the motor. This gives faster response to changes in demand speed, with reduced following error.

5.8.1 Calculating KVELFF

To calculate the correct value for KVELFF, you will need to know:

- The speed, in revolutions per minute, produced by the motor when a maximum demand (+10V) is applied to the drive.
- The setting for `LOOPTIME`. The factory preset setting is 1ms.
- The number of encoder lines for the attached motor. Baldor BSM motors use either 1000 or 2500 line encoders.

The servo loop formula uses speed values expressed in *quadrature counts per servo loop*. To calculate this figure:

1. First, divide the speed of the motor, in revolutions per minute, by 60 to give the number of revolutions per second. For example, if the motor speed is 3000rpm when a maximum demand (+10V) is applied to the drive:

   Revolutions per second = 3000 / 60
   = <u>50</u>

2. Next, calculate how many revolutions will occur during one servo loop. The factory preset servo loop time is 1ms (0.001 seconds), so:

   Revolutions per servo loop = 50 x 0.001 seconds
   = <u>0.05</u>

3. Now calculate how many quadrature encoder counts there are per revolution. The NextMove BX^{II} counts both edges of both pulse trains (CHA and CHB) coming from the encoder, so for every encoder line there are 4 ‘quadrature counts’. With a 1000 line encoder:

   Quadrature counts per revolution = 1000 x 4
   = <u>4000</u>

4. Finally, calculate how many quadrature counts there are per servo loop:

   Quadrature counts per servo loop = 4000 x 0.05
   = <u>200</u>

The analog demand output is controlled by a 12-bit DAC, which can create output voltages in the range -10V to +10V. This means a maximum output of +10V corresponds to a DAC value of 2048. The value of KVELFF is calculated by dividing 2048 by the number of quadrature counts per servo loop, so:

KVELFF	=	2048 / 200
	=	**10.24**

5. Click in the KVELFF box and enter the value.

   The calculated value should give zero following error in normal operation. Using values greater than the calculated value will cause the controller to have a following error ahead of the desired position. Using values less than the calculated value will cause the controller to have following error behind the desired position.

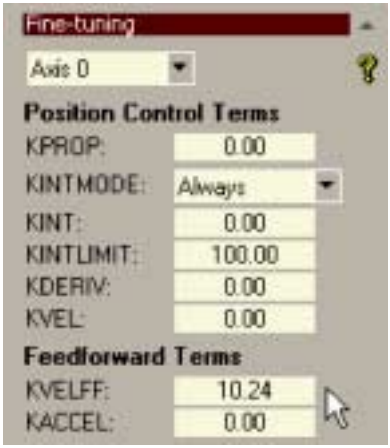

6. In the Move Type drop down box, check that the move type is set to Trapezoid.

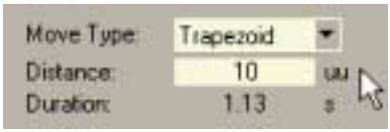

7. Click in the Distance box and enter a distance for the step move. It is recommended to set a value that will cause the motor to make a few revolutions, for example 10.

   Note: The distance depends on the scale set in section 5.3.1. If you set a scale so that units could be expressed in revolutions (or other unit of your choice), then those are the units that will be used here. If you did not set a scale, the amount you enter will be in encoder counts.

8. Click **Go**.

The NextMove BX^{II} will perform the move and the motor will turn. As the soon as the move is completed, WorkBench v5 will download captured data from the NextMove BX^{II}. The data will then be displayed in the Capture window as a graph.

   Note: The graph that you see will not look exactly the same as the graph shown here! Remember that each motor has a slightly different response.

9. Using the check boxes below the graph, select the Measured velocity and Demand velocity traces.

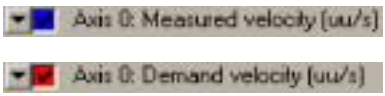

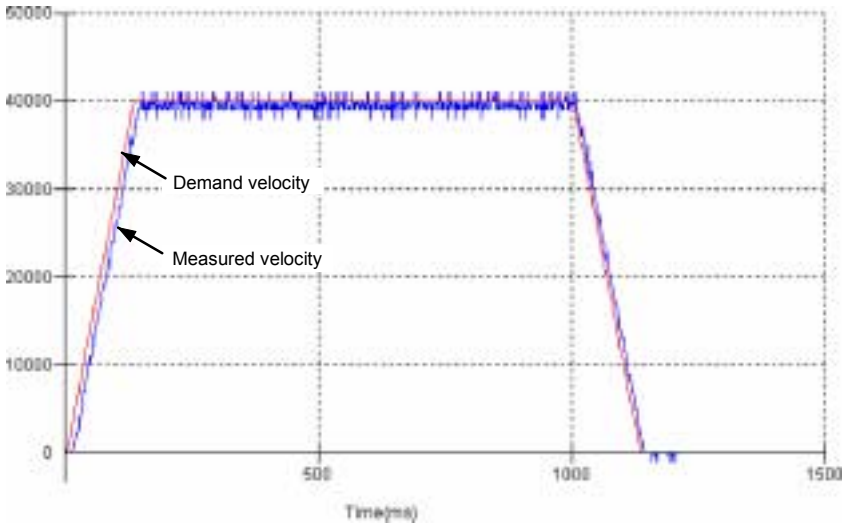

Figure 20 - Correct value of KVELFF

It may be necessary to make changes to the calculated value of KVELFF. If the trace for Measured velocity appears above the trace for Demand velocity, reduce the value of KVELFF. If the trace for Measured velocity appears below the trace for Demand velocity, increase the value of KVELFF. Repeat the test after each change. When the two traces appear on top of each other (approximately), the correct value for KVELFF has been found as shown in Figure 20.

5.8.2 Adjusting KPROP

The KPROP term can be used to reduce following error. Its value will usually be much smaller than the value used for an equivalent current controlled system. A fractional value, for example 0.1, will probably give the best response.

1. Click in the KPROP box and enter a starting value of 0.1.

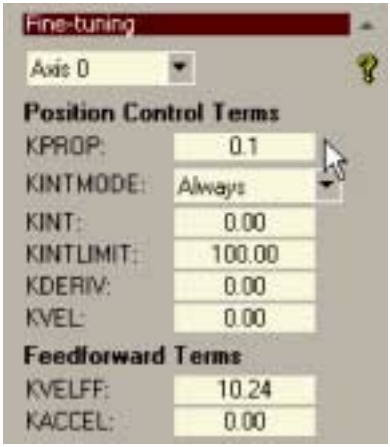

2. Click **Go**.

The NextMove BX^{II} will perform the move and the motor will turn. As the soon as the move is completed, WorkBench v5 will download captured data from the NextMove BX^{II}. The data will then be displayed in the Capture window as a graph.

Note: The graph that you see will not look exactly the same as the graph shown here! Remember that each motor has a slightly different response.

3. Using the check boxes below the graph, select the Measured position and Demand position traces.

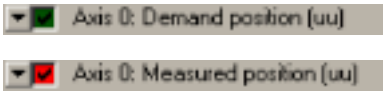

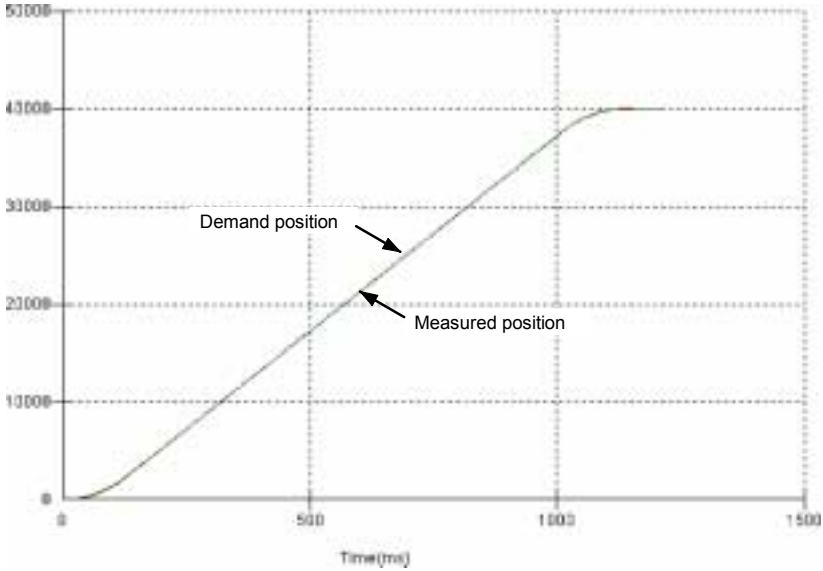

Figure 21 - Correct value of KPROP

The two traces will probably appear with a small offset from each other. Adjust KPROP by small amounts until the two traces appear on top of each other (approximately), as shown in Figure 21.

5.9 Digital input/output configuration

The Digital I/O window can be used to setup other digital inputs and outputs.

5.9.1 Digital input configuration

The Digital Inputs tab allows you to define how each digital input will be triggered and, optionally, if it is to be allocated to a special function, for example the Forward Limit. In the following example, digital input 1 will be set to trigger on a falling edge, and allocated to the forward limit input of axis 0:

1. In the Toolbox, click the Digital I/O icon.

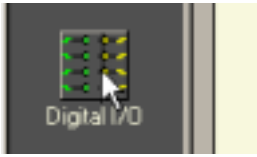

2. At the bottom of the Digital I/O screen, click the **Digital Inputs** tab. The left of the screen shows a column of yellow icons - High, Low, Rising, Falling and Rise/Fall. These describe how the input will be triggered.

3. Drag the **Falling** icon onto the **IN1** icon . This will setup IN1 to respond to a falling edge.

4. Now drag the **IN1** icon onto the **Fwd Limit** icon .

   This will setup IN1 as the Forward Limit input of axis 0.

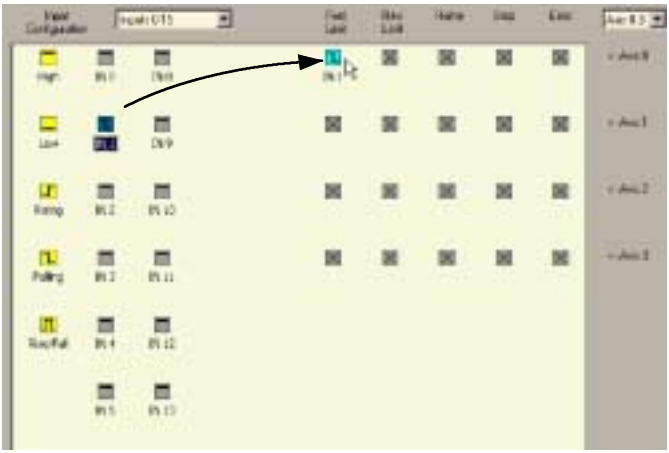

5. Click **Apply** to send the changes to the NextMove BX^{II}.

   Note: If required, multiple inputs can be configured before clicking **Apply**.

5.9.2 Digital output configuration

The Digital Outputs tab allows you to define how each digital output will operate and if it is to be allocated to a drive enable output (see section 5.3.2). Remember to click **Apply** to send the changes to the NextMove BX^{II}.

5.10 Saving setup information

When power is removed from the NextMove BX^{II}, configuration and tuning parameters are lost. You should therefore save this information in a file, which can be loaded after the unit is started. Alternatively, the information can be included in program files as part of the Startup block. Program files are stored when power is removed, so the Startup block can be used to restore configuration and tuning parameters automatically whenever a program is run.

1. In the Toolbox, click the Edit & Debug icon.

2. On the main menu, choose **File**, **New File**.

   A new program editing window will appear.

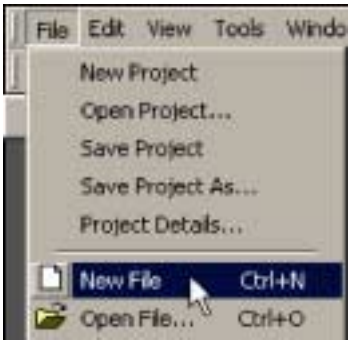

3. On the main menu, choose **Tools**, **Upload Configuration Parameters**.

   WorkBench v5 will read all the configuration information from the NextMove BX^{II} and place it in a Startup block. For details of the Startup block, see the Mint help file.

4. On the main menu, choose **File**, **Save File** . Locate a folder, enter a filename and click **Save**.

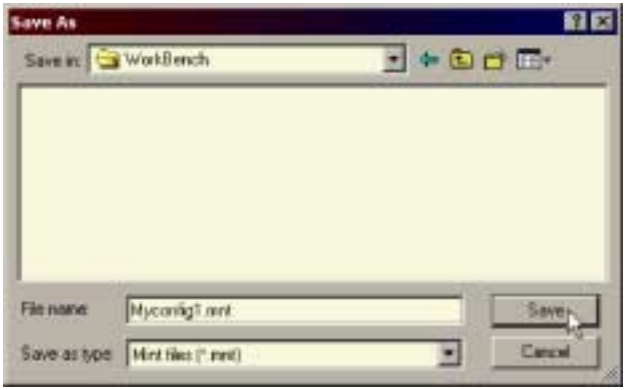

5.11 Loading saved information

1. In the Toolbox, click the Edit & Debug icon.

2. On the main menu, choose **File**, **Open File...**
   Locate the file and click **Open**.

WorkBench v5 will open a new editing window to display the file.

A Startup block should be included in every Mint program, so that whenever a program is loaded and run the NextMove BX^{II} will be correctly configured. Remember that every drive/motor combination has a slightly different response. If the same program is used on a different NextMove BX^{II} installation, the Startup block will need to be changed.

6.1 Introduction

This section explains common problems that may be encountered, together with possible solutions.

6.1.1 Problem diagnosis

If you have followed all the instructions in this manual in sequence, you should have few problems installing the NextMove BX^{II}. If you do have a problem, read this section first. In WorkBench v5, use the Error Log tool to view recent errors and then check the help file. If you cannot solve the problem or the problem persists, the SupportMe™ feature can be used.

6.1.2 SupportMe™ feature

The SupportMe™ feature (on the Help menu) can be used to e-mail information to the Baldor representative from whom you purchased the equipment. If required, you can choose to add your program files as attachments. WorkBench v5 will automatically start up your e-mail program and begin a new message, with comprehensive system information and selected attachments already in place. You can add any additional message of your own and then send the e-mail. The PC must have email facilities to use the SupportMe™ feature. If you prefer to contact Baldor technical support by telephone or fax, contact details are provided at the front of this manual. Please have the following information ready:

- The serial number of your NextMove BX^{II}.
- Use the Help, SupportMe menu item in WorkBench v5 to view details about your system.
- The type of servo amplifier and motor that you are using.
- Give a clear description of what you are trying to do, for example trying to establish communications with WorkBench v5 or trying to perform fine-tuning.
- Give a clear description of the symptoms that you can observe, for example the Status display, error messages displayed in WorkBench v5, or the current value of any of the Mint error keywords `AXISERROR`, `AXISSTATUS`, `INITERROR`, and `MISCERROR`.
- The type of motion generated in the motor shaft.
- Give a list of any parameters that you have setup, for example the gain settings you have entered.

6.2 NextMove BX^{II} indicators

6.2.1 Status display

The Status LED normally displays the unit's node number. To display information about a specific axis, use the `LED` keyword (see the MintMT help file). When a specific axis is selected, its LED (numbered 0-3) will be illuminated, and the following symbols may be displayed by the Status LED. Some characters will flash to indicate an error.

2	Spline. A spline move is being performed. See the Mint keyword `SPLINE` and related commands.
8	Axis enabled.
q	Torque mode. The NextMove BX^{II} is in Torque mode. See the Mint keyword `TORQUE` and related commands.
A	Hold to Analog. The axis is in Hold To Analog mode. See the Mint keyword `HTA` and related commands.
d	Follow and offset. When an axis is following a demand signal it may be necessary to advance or retard the slave in relation to the master. To do this an offset move is performed in parallel with the follow. See the Mint keywords `FOLLOW` and `OFFSET`.
C	Circle. A circle move is being performed. See the Mint keywords `CIRCLEA` or `CIRCLER`.
c	Cam. A Cam profile is being profiled. See the Mint keyword `CAM`.
E.	General error. See `AXISERROR`. The motion toolbar displays the status of `AXISERROR`, which is a bit pattern of all latched errors. See also the *Error Log* topics in the help file.
E.	Error input. The `ERRORINPUT` has been activated and generated an error.
F	Flying shear. A flying shear is being profiled. See the Mint keyword `FLY`.
F.	Position following error. A following error has occurred. See the Mint keyword `AXISERROR` and associated keywords. Following errors could be caused by a badly tuned drive/motor. At higher acceleration and deceleration rates, the following error will typically be greater. Ensure that the drive/motor is adequately tuned to cope with these acceleration rates. The following error limit can be adjusted to suite your application (see Mint keywords `FOLERRORFATAL` and `VELFATAL`). Following error could also be the cause of encoder/resolver loss (see also Mint keyword `FEEDBACKFAULTENABLE`).
F	Follow mode. The axis is in Follow mode. See the Mint keyword `FOLLOW`.
h	Homing. The axis is currently homing. See the Mint keyword `HOME`.
I	Incremental move. An incremental move is being profiled. See the Mint keywords `INCA` and `INCR`.

J	Jog. The axis is jogging. In the Mint help file, see the topics `JOG`, `JOGCOMMAND` and *Jog mode*.
o	Offset move. The axis is performing an offset move.
P	Positional Move. The axis is performing a linear move. See the Mint keywords `MOVEA` and `MOVER`.
S	Stop. A `STOP` command has been issued or the stop input is active.
-	Axis disabled. The axis/drive must be enabled before operation can continue. See section 5.3.3. Click the **Drive enable** button in WorkBench v5.
=	Suspend. The `SUSPEND` command has been issued and is active. Motion will be ramped to zero demand whilst active.
r.	Reverse software or hardware limit. A reverse software limit has been activated. See `AXISERROR` and/or `AXISSTATUS` to determine which applies.
f.	Forward software or hardware limit. A forward software limit has been activated. See `AXISERROR` and/or `AXISSTATUS` to determine which applies.
≡	Firmware being updated (horizontal bars appear sequentially). New firmware is being downloaded to the NextMove BX^{II}.
i.	Initialization error. An initialization error has occurred at power on. See the *Error Log* or `INITERROR` topics in the help file. Initialization errors should not normally occur.

User defined symbols can be made to appear using the Mint keywords `LED` and `LEDDISPLAY`.

6.2.2 Motor control

Symptom	Check
NextMove BX^{II} appears to be working but will not cause motor to turn.	Check that the connections between motor and drive are correct. Use WorkBench v5 to perform the basic system tests (see section 5.4). Ensure that while the NextMove BX^{II} is not in error, the drive is enabled and working. When the NextMove BX^{II} is first powered up the drive should be disabled if there is no program running (there is often an LED on the front of the drive to indicate status). Check that the servo loop gains are setup correctly - check the Fine-tuning window. See sections 5.5 to 5.7.
Motor runs uncontrollably when controller is switched on.	Check that the encoders are connected, they have power through Encoder V+ (if required, see sections 4.4.1 and 4.7.1) and are functioning correctly. Use a dual trace oscilloscope to display both channels of the encoder and/or the complement signals simultaneously. Check that the drive is connected correctly, and that with zero demand from the NextMove BX^{II} there is 0V at the drive demand input. See section 5.4.1. Verify that the NextMove BX^{II} and drive are correctly grounded to a common earth point.
Motor runs uncontrollably when controller is switched on and servo loop gains are applied, or when a move is set in progress. Motor then stops after a short time.	Check that the axis' corresponding encoder and demand signals are connected to the same axes of motion. Check the demand to the drive is connected with the correct polarity. Check that for a positive demand signal, a positive increase in axis position is seen. The Mint `DACMODE` keyword can be used to reverse DAC output polarity. Check that the maximum following error is set to a reasonable value. For setting up purposes, following error detection may be disabled by setting `FOLERRORMODE = 0`.
Motor is under control, but vibrates or overshoots during a move.	Servo loop gains may be set incorrectly. See sections 5.5 to 5.8.

Symptom	Check
Motor is under control, but when moved to a position and then back to the start it does not return to the same position.	Using an oscilloscope, check: ■ all encoder channels are clear signals and free from electrical noise; ■ they are correctly wired to the controller; ■ when the motor turns, the two square wave signals are 90 degrees out of phase. Also check the complement signals. Ensure that the encoder lead uses shielded twisted pair cable and that the shield is attached to the shield connection only at the NextMove BX^{II} end. Verify that the NextMove BX^{II} and drive are correctly grounded to a common earth point.

6.2.3 Communication

If the problem is not listed below please contact Baldor Technical Support. An oscilloscope will be useful for many of the electrical tests described below.

Symptom	Check
Cannot detect NextMove BX^{II}	Check that the NextMove BX^{II} is powered and the serial lead is properly connected.
Cannot communicate with the controller.	Verify that WorkBench v5 is loaded and that NextMove BX^{II} is the currently selected controller.

6.2.4 Axis LED is red or Status LED shows a flashing symbol

If an axis LED is illuminated red and/or the Status display shows a flashing symbol, use the Error Log tool in WorkBench v5 to view a list of recent errors. Alternatively, type `PRINT AXISERROR` and `PRINT MISCERROR` as separate commands in the WorkBench v5 Command window. Each of these commands will return an error code, a description of which can be found in the help file.

Press F1 and locate the `AXISERROR` and `MISCERROR` keywords. The *Error Handling* book contains topics listing the Status display indicators and basic error codes. Remember that many error codes are the sum of a bit pattern so may not be listed individually. For help on understanding bit pattern values, see the *Bit pattern values* topic in the *Keywords* book.

7.1 Introduction

This section provides technical specifications of the NextMove BX^{II}.

7.1.1 Input power

Description	**Unit**	**Value**
Logic supply input voltage	**VDC**	24
Minimum input voltage	**VDC**	18
Maximum input voltage		30
Logic supply input current (maximum)	**mA**	700
User supply input voltage	**VDC**	12-24
User supply input current (maximum)	**mA**	850

7.1.2 Analog inputs (X6)

Description	**Unit**	**Value**
Type		Single ended or differential (software selectable)
Common mode voltage range	**VDC**	±10 (software selectable)
Input impedance	**kÙ**	>20
Input ADC resolution	**bits**	12 (includes sign bit)
Equivalent resolution (±10V input)	**mV**	±4.9
Sampling interval (variable)	**ms**	0.22 - 2

7.1.3 Analog outputs (Demands - X7)

Description	Unit	Value
Type		Bipolar
Output voltage range	**VDC**	±10
Output current (max)	**mA**	1
Output DAC resolution	**bits**	14 (includes sign bit)
Equivalent resolution	**mV**	±1.22
Update interval		Immediate

7.1.4 Digital inputs (X1 & X2)

Description	Unit	Value
Type	**VDC**	Opto-isolated, AC inputs
Input voltage (Active high) Nominal Minimum	**VDC**	 24 12
Input voltage (Active low) Nominal Maximum	**VDC**	 0 2
Input current (approximate, per input)	**mA**	11
Sampling interval	**ms**	1

7.1.5 Digital inputs (Interrupts) (X6)

Description	Unit	Value
Type	**VDC**	Non-isolated, AC inputs
Input voltage (Active high) Nominal Minimum	**VDC**	 24 12
Input voltage (Active low) Nominal Maximum	**VDC**	 0 2
Input current (approximate, per input)	**mA**	9

7.1.6 Digital outputs (X4)

Description	**Unit**	**Value**
Output current (maximum continuous, each output)	**mA**	50
Update interval		Immediate

7.1.7 Relay output (X5)

Description	**Unit**	**Value**
Contacts		Normally closed
Contact rating (resistive)		1A @ 24VDC or 0.5A @ 120VAC
Maximum carrying current	**A**	2
Maximum switching power		60VA, 24W
Maximum switching voltage		125VAC, 60VDC
Maximum switching current	**A**	1
Contact resistance (maximum)	**mÙ**	100
Update interval		Immediate

7.1.8 Encoder interfaces (X9 - X13)

Description	**Unit**	**Value**
Encoder input		A/B Differential, Z index
Maximum input frequency	**MHz**	1.87
Output power supply to encoders (total)		5V, 650mA max.
Maximum recommended cable length		30.5m (100ft)

7.1.9 CAN interfaces (X16 & X17)

Description	**Unit**	**Value**
Channels		CANopen, Baldor CAN
Bit rate	**Kbit/s**	10, 20, 50, 100, 125, 250, 500, 800, 1000

7.1.10 Environmental

Description	**Unit**		
Operating temperature range		**Min**	**Max**
	°C	0	+40
	°F	+32	+104
Maximum humidity	**%**	80% for temperatures up to 87°F (31°C) decreasingly linearly to 50% relative humidity at 104°F (40°C), non-condensing (according to DIN40 040 / IEC144)	
Maximum installation altitude (above m.s.l.)	**m**	2000	
	ft	6560	

See also section 3.2.

7.1.11 Weights and dimensions

Description	**Unit**	**Value**
Dimensions (H x W x D)		312mm x 58.5mm x 194mm (12.3in x 2.3in x 7.6in)
Weight		1.86kg (4.1lb)

A.1 Introduction

The capabilities of the NextMove BX^{II} can be expanded using additional peripheral devices.

A.1.1 Baldor CAN nodes

Digital I/O can be expanded easily on NextMove BX^{II} using the Baldor CAN (CAN2) connection. This provides a high speed serial bus interface to a range of I/O devices, including:

- *inputNode 8*: 8 opto isolated digital inputs.
- *relayNode 8*: 8 relay outputs.
- *outputNode 8*: 8 opto isolated digital outputs with short circuit and over current protection.
- *ioNode 24/24*: 24 opto isolated input and 24 opto isolated outputs.
- *keypadNode*: General purpose operator panel (3 and 4 axis versions).

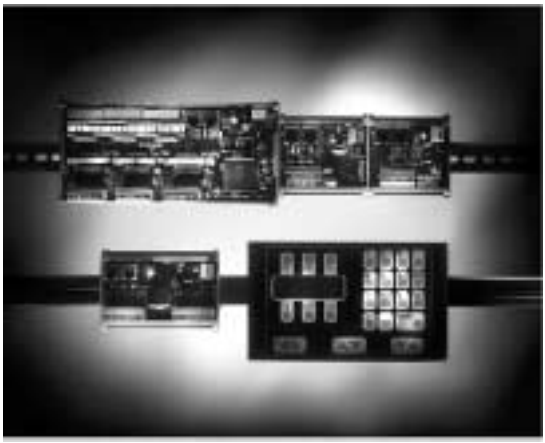

Catalog number	Description
ION001-503	8 digital inputs
ION002-503	8 relay outputs
ION003-503	8 digital outputs
ION004-503	24 digital inputs and 24 digital outputs
KPD002-502	27 key keypad and 4 line LCD display
KPD002-505	41 key keypad and 4 line LCD display

A.1.2 Encoder Splitter/Buffer board

This is a stand-alone PCB that takes an encoder signal, either single ended or differential and gives differential outputs. This is useful for 'daisy chaining' an encoder signal from a master across a number of controllers.

Catalog number	Description
OPT008-501	2-way encoder splitter - allows a single-ended or differential encoder pulse train to be shared between two devices
OPT029-501	4-way encoder splitter - allows a single-ended or differential encoder pulse train to be shared between four devices

Baldor Electric Company
P.O. Box 2400
Ft. Smith, AR 72902-2400
Tel: (479) 646-4711
Fax: (479) 648-5792

www.baldor.com

LT0158A00

Printed in UK
© Baldor UK Ltd