LOGIC

LDS120/120DS/240/360/700

LDS – GROUND DRIVE SPREADER

OPERATORS MANUAL

WM1-LDS120

INDEX

LDS Serial Number:

Date of Purchase:

1 INTRODUCTION

*With the purchase of your **LOGIC LDS – GROUND DRIVE SPREADER** you have made an excellent choice.*

This machine should give first class service for a long time, if used correctly, and maintained as described in this manual.

The Ground Drive Spreader range is capable of spreading fertiliser as well as salt depending on which model you have, it is ideal for small holdings or similar smaller areas where a general approach to spreading is required.

The hopper capacities range from, 120 - 700lt. being land driven it is essential to maintain a constant forward speed if accurate spread patterns and accurate quantities are to be achieved, therefore an accurate speedometer may be required.

The Ground Drive Spreader has a mild steel framework with a galvanised finish to add extra protection from corrosion and harsh working environments.

If, after reading this manual there are any queries, please get in touch, we will be pleased to help.

NORTH & EXPORT
LOGIC MANUFACTURING LTD
Foundry Industrial Estate
Bridge End, Hexham
Northumberland NE46 4JL
Tel: 01434 606661 Fax: 01434 608143
E-mail: sales@logic.gb.com
www.logic.gb.com

SOUTH
***LOGIC MH LTD -** New Whiteway Works,*
Fossecross Industrial Estate
Chedworth. Cheltenham
Gloucestershire GL54 4NW
Tel: 01285 720930 Fax:01285 720840
E-mail: sales@logic.gb.com
www.logic.gb.com

Selecting and using equipment for All Terrain Vehicles (ATVs)

Agriculture Sheet No 11

Introduction

This information sheet gives advice to users on how to use All Terrain Vehicles (ATVs) safely with towed and mounted equipment.

Plan the use of an ATV carefully and take particular note of ground conditions and slopes, as these may vary considerably, depending on the terrain, weather conditions, ground surface and the crop under the wheels.

Towed equipment

Choose equipment which matches your ATV. Stability of towed equipment is affected by:

Weight ratios

The safe ratio between the trailed laden maximum weight and unladen weight of the ATV must be assessed for each operation.

Always take note of information given in the manufacturer's handbook when making this assessment.

As a guide research shows that on level ground, 4 x unladen weight of the ATV for braked trailed equipment and 2 x unladen weight of the ATV for unbraked trailed equipment are the appropriate maximum ratios.

Note: *For work on slopes or uneven ground the ratio will need to be reduced.*

Braking

Fit:

Brakes to trailed equipment. This helps prevent jack-knifing when braking or travelling downhill;

Over-run brakes which come into action whenever the ATV brakes are applied;

Centre of gravity

Stability of the ATV is improved if there is:

A low centre of gravity which is within the wheel base;
A wide wheel base;

A long draw-bar;

Means for holding detachable equipment in position.

Hitching and loads

Stability is also improved if:

Some weight is transferred from the trailer onto the ATV draw-bar;

The draw-bar has a swivel hitch and the ATV a ball hitch having a large head to neck ratio. This makes it easier for the draw-bar hitch to swivel and cope with undulating ground;

The load is positioned as near to the centre of the trailer as possible.

Tyres and wheels

Check tyre pressures regularly with a pressure gauge capable of reading low pressures accurately;

Check tyre pressures regularly for damage and wear;

Select equipment which has tyres and wheels that can cope with speeds over 20 mph and occasional higher speeds;

Use wheels with bead locks on the rims if the main use is going to be on sloping ground. This prevents tyre run-off on side slopes.

Maximum towed weight

Follow the advice given by manufacturers on the maximum trailed weight. This will be found on the equipment or in the instruction handbook.

Note: *Universal road going trailers will normally have the maximum gross weight stated on a separate notice.*

Mounted Equipment

ATVs using mounted equipment are safer if the equipment has:

A low centre of gravity. This improves stability;

A gross weight within the limits the limits approved by the ATV manufacturer;

No dangerous projections to enquire the operator or bystanders;

No forward projections which stop head protection being worn;

Controls which are easy to work and which do not create a hazard to the operator;

Working speeds less than 16hp.

Instructions for the mounted and trailed equipment

Take note of the manufacturers instructions on:

Operating on slopes;

Where to place loads so as to give fore/aft and lateral stability;

The risks of using equipment with negative drawbar nose weight, i.e. loss of traction;

The maximum operating speed;

The effect that equipment carried on front and/or rear racks will have on longitudinal and lateral stability;

Securing loads;

The use of ballast, if any to improve stability;

The need to select and use safe routes.

Using an ATV

Read the manufactures instruction book and take note of the safety advice given;

Choose an ATV with enough power for the work you want it to do. Four wheel drive will give better traction and mobility and may provide a margin of safety;

Choose a safe route;

Be aware that increased speed greatly increases the risk of instability and the risk of an overturn.

Training

Train everyone who has to use an ATV whether with mounted or trailed equipment or as a solo machine. The training should emphasise the factors affecting stability, the need for care and concentration, and how to recognise the conditions, which may affect the safety of operation. It is important for trainees to familiarise themselves with the handling and control of the machine on level open ground before tackling rough hill terrain.

Suitable training courses are run by such bodies as ATB Landbase and Forestry Authority.

Helmets

Wear head protection, which protects the head and neck. Helmets to BS 6658:1985 (specification for protective helmets for vehicle users) are suitable. Some users find open faced helmets more suitable than full face helmets.

Use of ATV's for Spraying

A separate information sheet No 10 ATV's fitted with spray equipment is available from the Crop and Pesticides National Interest Group (see address below)to cover the use of mounted or trailed ATV sprayers.

Further information

HSE Contract Research Report No52/1993 braking and overturning stability of all terrain vehicles with trailed or mounted loads and review of guidelines 1993 ISBN 011 882149 0

HSE safeguarding agricultural machinery: moving parts HS (G) 89 1992 ISBN 011 882051 6. This provides further information on the design of machinery.

These publications are available from HSE books, PO Box 1999, Sudbury, Suffolk, CO10 6FS (Tel: 0787 881165; fax: 0787 313995).

If you need information please contact your local HSE office.

Further copies of this information may be obtained from the crop and pesticides national interest group, HSE, Bareback house, Trinity Square, Nottingham NG1 4AU: tel: 0602 470712

Printed and published by HSE

NIS/13/11 *C100*

⚠ ***This symbol means <u>WARNING</u> or <u>CAUTION</u> Personal safety or damage will be at risk if these instructions are ignored. Most accidents are caused by neglect or carelessness; Avoid needless accidents by following the safety precautions listed below.***

2 IN THE INTEREST OF SAFETY: <u>DO NOT</u>

1. ***DO NOT*** *– Operate the LDS without all the correct guards fitted.*
2. ***DO NOT*** *– Touch any moving or rotating parts, during working conditions*
3. ***DO NOT*** *– Operate the LDS without suitable ear and eye protection*
4. ***DO NOT*** *– Allow passengers.*
5. ***DO NOT*** *– Operate the LDS on excessively steep slopes.*
6. ***DO NOT****– Operate the LDS unless all safety features are fitted, and are used correctly*
7. ***DO NOT*** *– Operate the LDS until you have read and understood the entire operators manual*
8. ***DO NOT*** *– Wear loose fitting clothing, to avoid catching on parts of the machine*
9. ***DO NOT*** *– Operate the LDS in Dark conditions unless suitable artificial light is used.*
10. ***DO NOT*** *– Climb on the LDS.*
11. ***DO NOT*** *– Travel at speeds in excess of* ***20 Mph*** *(32Kph) when travelling to and from the spreading area.*
12. ***DO NOT*** *– Exceed* ***10 Mph*** *(16 Kph) in working conditions*
13. ***DO NOT*** *– Engage or disengage the disc drive whilst the machine is running.*
14. ***DO NOT*** *– Tow the LDS with an unsuitable vehicle, check vehicle-towing limits before operation. Never overload the LDS.*
15. ***DO NOT*** *– Use the spreader for any other task other than the one it was designed for.*
16. ***DO NOT*** *– Use the LDS120 for spreading salt, only use the LDS120DS model.*
17. ***DO NOT*** *– Use the spreaders on public roads. The spreaders are not road legal.*

3 IN THE INTEREST OF SAFETY: DO

1. ***DO*** *– Follow all manufactures guidelines.*

2. ***DO*** *– Ensure all spectators are a min of 15 metres distance away when operating the spreader. The operator must continually check the working area, to avoid harming such third parties.*

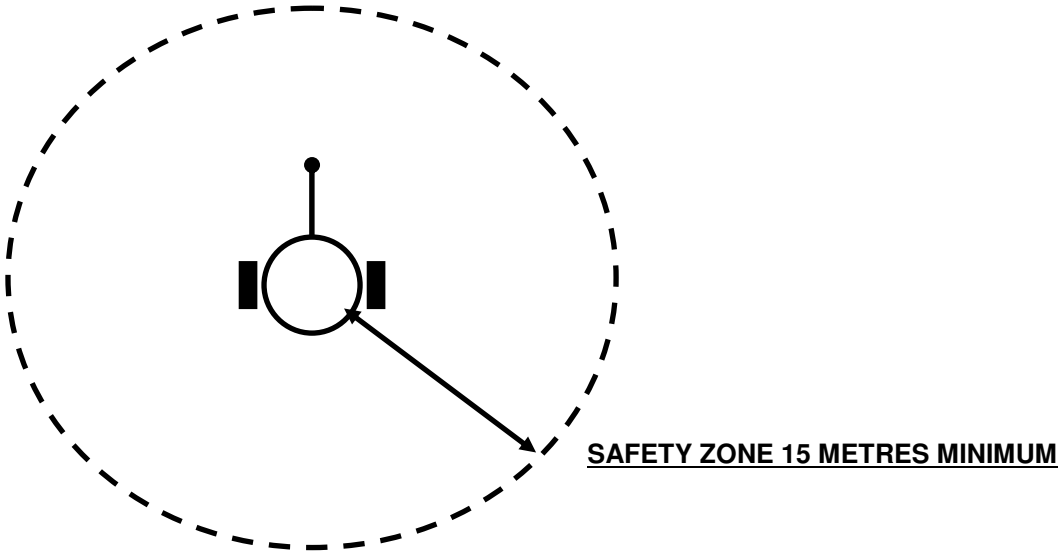

3. ***DO*** *– Carry out regular servicing and checks before use.*

4. ***DO*** *– Clear spreading area from potential damaging or restricting components.*

5. ***DO*** *– Reduce speeds when turning corners, working on hillsides or rough terrain*

6. ***DO*** *– Be aware components can be hot after operation e.g.: Gearbox*

7. ***DO*** *– Follow any towing guidelines stated by ATV / Vehicle manufacturer.*

8. ***DO*** *– Follow suitable lifting regulations when filling the hopper.*

9. ***DO*** *– Ensure all safety decals are in good condition, replace any that are damaged.*

10. ***DO –*** *Keep hands and feet away from rotating parts*

11. ***DO*** *– Ensure LDS disc drive is disengaged before transporting from workplace.*

12. ***DO*** *- Ensure the spreader tow hitch is in good repair and fit for towing.*

13. ***DO*** *– Wear protective gloves and boots / facemask when handling fertiliser or salt.*

14. ***DO*** *– Ensure the hopper is empty and the machine is washed down after daily use.*

4 INSTRUCTION / WARNING DECALS

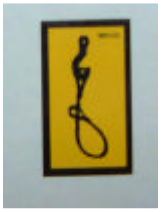

⚠ *The above decals should be located on your LDS – Ground Drive Spreader. If any of the above decals are not located on your LDS or are damaged in any way contact Logic for some replacement decals before use.*

5 TRANSPORTING & LIFTING

1. *Check to see if the vehicle transporting the spreader can legally carry its weight (See manufactures plate on spreader for unladen weights)*

2. *Ensure the vehicle used to lift and transport the LDS has the necessary lifting and loading capacity. Follow all vehicle manufactures guidelines for lifting.*

2. When lifting the LDS for transporting / delivery purposes always ensure to locate lifting straps where you see the lifting symbol as shown on the below diagram. Never lift the spreaders with material in the hopper. And ensure pedestrians are clear from danger

3. *Ensure all straps are the same length and comply with EN1492-1*

4. All LDS unladen weights are clearly marked on the Manufacture's plate attached to the LDS framework. Check the lifting weight complies with the vehicle lifting limits.

LDS120/120DS: Only lift the LDS from the correct lifting points as shown below.

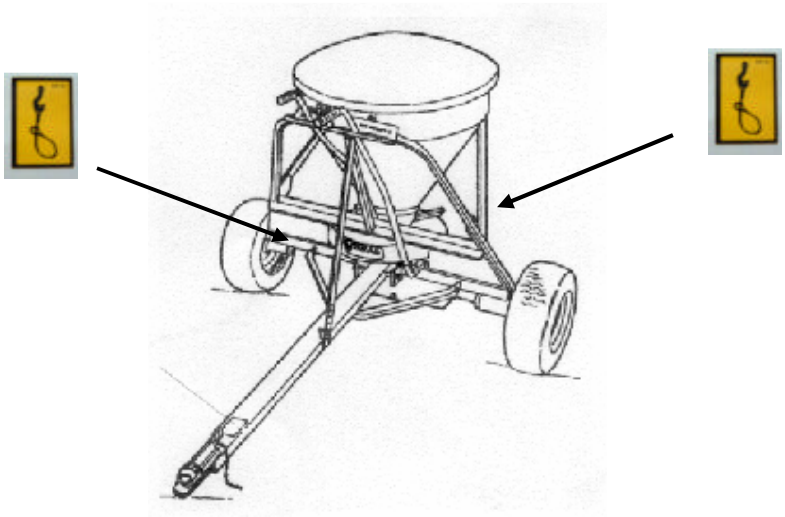

LDS240 / LDS700

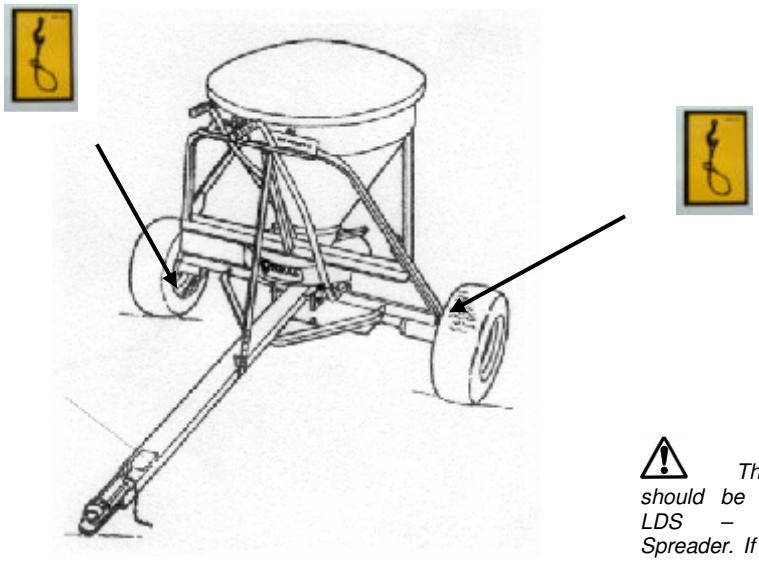

⚠ *The above decals should be located on your LDS – Ground Drive Spreader. If any of the above decals are not located on your LDS or are damaged in any way contact Logic for some replacement decals.*

6 OPERATING INSTRUCTIONS AND ADJUSTMENTS

6.1 – BEFORE USE CHECK THE FOLLOWING:

1. *Ensure the tow ball on the vehicle is compatible with the spreader.*

2. *Check the operation of all controls (A).*

3. *Ensure the ride height is correctly set for the ATV towing the spreader (B). Remove the fixing bolt and adjust the angle of the spreader to ensure the spreader disc is running horizontal to the ground. Replace the fixing bolt in the nearest hole available. (The spreader disc must run horizontally to the ground to ensure the correct spreading width and overlap is achieved)*

4. *Check that the tyre pressure (C)* ***10psi minimum to 25psi maximum*** *dependant on load size. Check the condition of the tyres. Look for signs of wear, cuts and impact damage.*

5. *Check the free operation for the shutter aperture (D).*

6. *Check the condition of the hopper and lid (E, If fitted).*

7. *Check that all grease points have been greased, and are operating freely.*

8. *Check the gearbox for oil leaks, if an oil leak is evident do not use the spreader and carry out repairs immediately.*

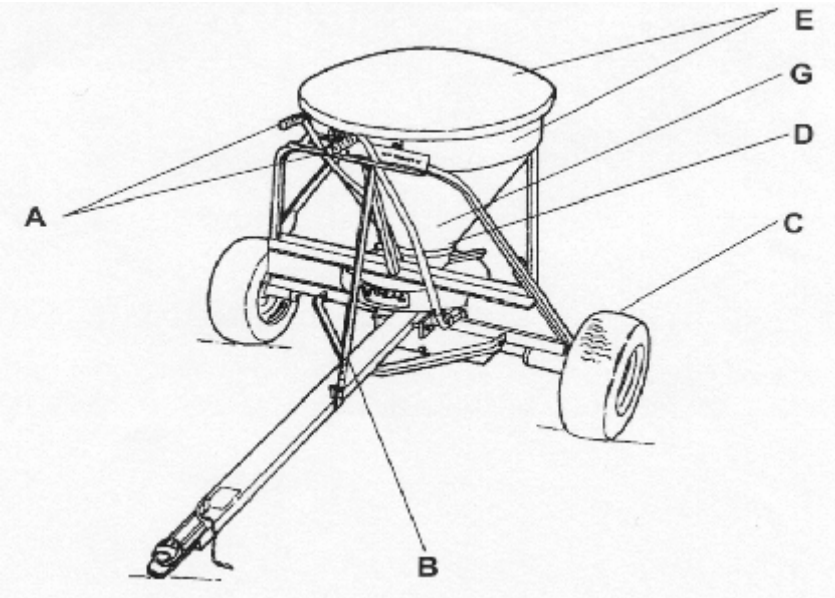

Check that the agitator (G) is free from debris and well greased.

9. *Before filling the hopper, set the flow from the hopper by moving the pointer (A) to the setting required (B) and locking in place with the lock nut (C).****See figure 11.1***

10. *Place the flow lever (D) in the zero position and fill the hopper with the material to be spread. Ensure that a suitable towing vehicle has been hooked up to the spreader before filling and that the handbrake has been applied. Do not overfill the hopper; this could result in fertilizer being spilt or component failure. Ensure there are no foreign bodies in the hopper e.g. stones or rocks. Wear suitable protective clothing and face protection.*

11. *Drive to the area requiring the fertiliser, move the drive lever (E) to the IN position (F) gently moving forward at the same time.*

Figure 11.1

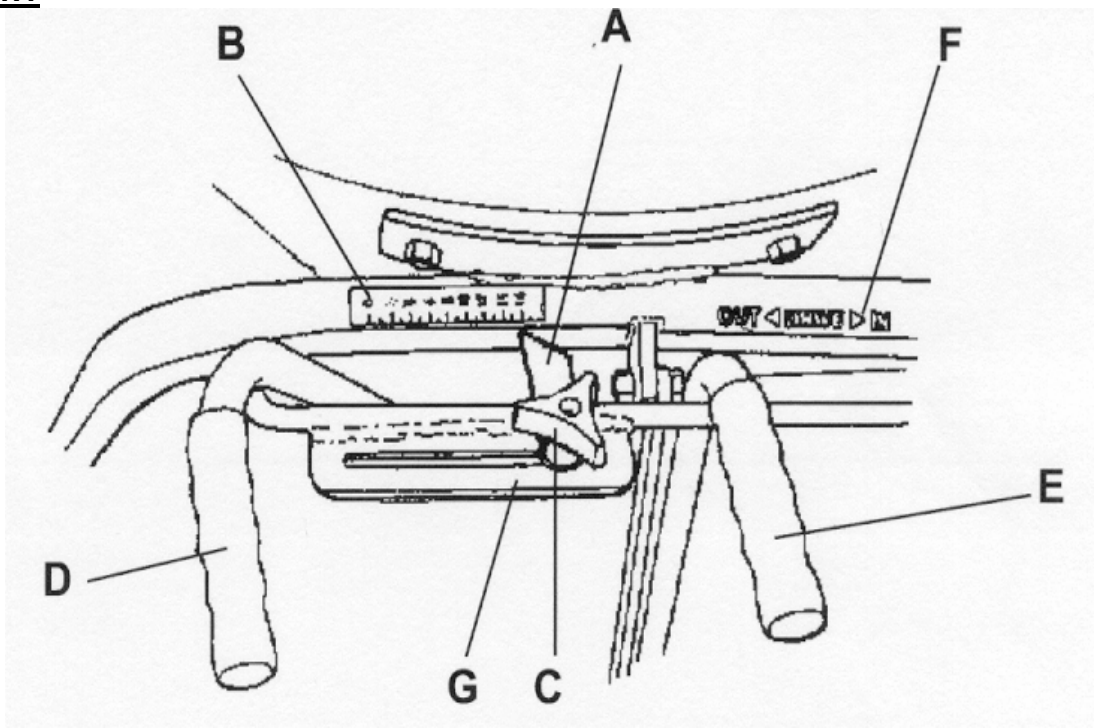

6.2 – DISTRIBUTION OF THE FERTILISER/SALT:

The operator must ensure that the towing vehicle travels at a constant speed in order to obtain an even distribution of material, the operator should use the following overlap technique as illustrated below:

Diagram shows three bout marks and the desired overlap.

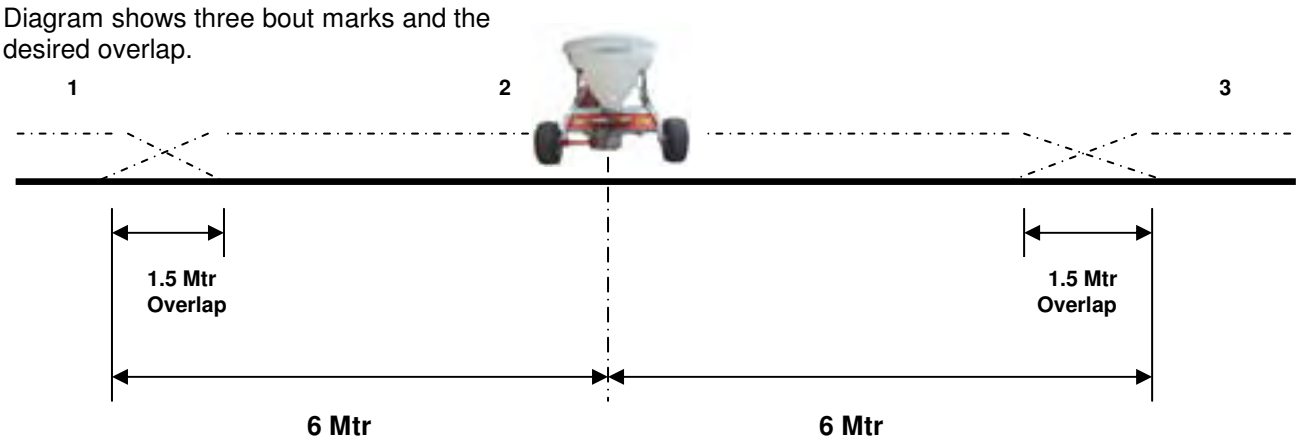

Spread width is dependable on forward speed and the type of material being spread.

6.3 – VANE REGULATION / ADJUSTMENT:

Should the distribution prove to be uneven, the operator can remedy this by regulating the angle of all the vanes by adjusting the vanes to the different holes on the spreader disc.

LDS120 / 240

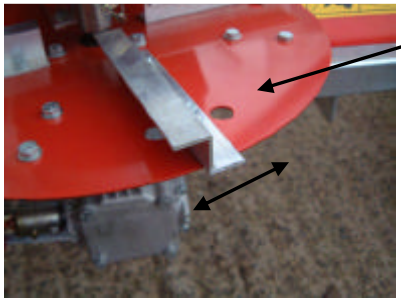

Vane adjusting holes

LDS700

6.4 – CALIBRATION (FERTILISER)

To precisely calibrate the spreader carefully read and perform the following instructions:

1. *Place a measured amount of fertiliser in the hopper e.g. 10kg*
2. *Choose an aperture setting to suit the rate required for the type of fertiliser being used, e.g. Setting 6*
3. *Obtain the desired travel speed (12 to 20kpH) and open the aperture to preset setting 6, e.g. 200 metres. (**NOTE:** Maintain a constant speed)*
4. *Check the effective spread coverage width, e.g. 12 metres (D).*
5. *Measure the amount of fertiliser left in the hopper, e.g. 4kg (E).*

Then perform the following calculations: -

*Measured amount of fertiliser initially loaded in hopper (A): **10kg***
*Deduct any remaining fertiliser (e): **4kg***
*Balance used (B): **6kg***

*Multiply width of spread (D) by the metres travelled (C): **12 x 200 Mtr = 2400 Mtr²***

Divide 10,000 (1hectare) by the answer (2,400): $\frac{10{,}000}{2400} = 4.1$

*Multiply the sum (4.1) by the test quantity balance used (B, 6Kg): **4.1 x 6 = 24.6 kg/Ha***

The figure achieved is the sowing rate per hectare at the constant speed selected for the test. Due to the variations of seeds and fertiliser types, it is recommended the test be carried out for each product being used. Adjust the machine accordingly until the desired application rate is achieved.
Record all results to ensure accurate speed rates for future reference, use the chart provided on page 13).

6.5 – CALIBRATION CHARTS

LDS120:

Calibrated at a speed of 15kpH (kg/ha)

Setting	1	2	3	4	5	6
Urea	-	11.00	27.50	482.50	63.30	82.50
Super	-	19.30	44.00	77.00	112.80	140.30
DAP	-	19.30	35.80	57.80	79.80	104.50

Calibrated at a speed of 20kpH (kg/ha)

Setting	1	2	3	4	5	6
Urea	-	7.50	20.00	32.50	50.00	62.50
Super	-	20.00	42.50	62.50	82.50	102.50
DAP	-	10.00	25.00	40.00	60.00	75.00

LDS240:

Calibrated at a speed of 15kpH (kg/ha)

Setting	1	2	3	4	5	6
Urea	-	11.00	29.70	41.50	52.50	67.50
Super	-	19.30	44.00	93.50	107.30	140.30
DAP	-	11.00	33.00	55.00	74.50	99.00

Calibrated at a speed of 20kpH (kg/ha)

Setting	1	2	3	4	5	6
Urea	-	7.50	17.50	30.00	47.50	67.50
Super	-	15.00	30.00	55.00	87.50	102.50
DAP	-	8.80	25.00	40.00	55.00	70.00

LDS700:

Calibrated at a speed of 15 KPH (kg/ha)

Setting	1	2	3	4	5	6	7	8	9	10	11
Urea	-	-	9.40	25.00	50.00	84.40	118.80	162.50	200.00	250.00	275.00
Super	-	-	15.60	53.10	103.10	143.80	200.00	268.70	337.50	412.50	425.00
DAP	-	-	12.50	37.50	62.50	100.00	162.50	193.80	250.00	325.00	337.50

Calibrated at a speed of 20KPH (kg/ha)

Setting	1	2	3	4	5	6	7	8	9	10	11
Urea	-	-	9.40	25.00	40.60	75.00	100.00	137.50	162.50	200.00	237.50
Super	-	-	15.60	43.80	81.30	131.30	167.50	225.00	262.50	300.00	312.50
DAP	-	-	9.40	28.10	50.00	81.30	125.00	156.30	200.00	250.00	275.00

NOTE *The calibration charts above are a guide only and should be checked to confirm accuracy.*

6.6 - LDS120DS – CALIBRATION (SALT)

*The **Logic LDS120DS** is capable of spreading dry white bagged de-icing salt only.*

All materials will vary slightly, depending on density and moisture, etc, even in bags, the same batch can vary.
The following steps are intended as a guide only, and it is highly recommended that simple test runs are carried out in the filling area before setting out, to check that the spreading quantity and pattern are satisfactory.

The main controlling factor is forward speed, which dictates the spreading width. The application rate will then be controlled by the feed gate setting.

*The recommended **minimum** working forward speed is **3 mph** (5 kph). This would be used in confined spaces, or where a minimum spreading width is required. At this speed the spreading width will be approx. 8mtrs. Recommended **maximum working** speed is **12 mph** (19 kph) which will result in a spreading width of approx 12mtrs suitable for car parks and roads, etc.*

The feed gate setting at the front of the hopper controls the material flow and therefore the application rate (grams per sq metre). Our recommendation would be to use setting 6 for spreading salt; the aperture needs to be open enough to prevent the salt bridging in the hopper.

For transporting max / min operating speeds see page 4.

CALIBRATION STAGES

1. *Decide what spread width is required in relation to a safe working speed.*

2. *Select the feed gate setting to achieve the desired application rate.*
   This will depend on trials carried out with materials to be spread at the time.

3. *Check the accuracy of the settings, try a few trial runs over a clean area of concrete or road surface, at the correct forward speed. Check the spread width, which may vary due to bouncing material if it is very dry.*
   Check the application rate by visually looking at your test run and ensure a suitable amount of salt is spread evenly. To change the application rate alter the forward speed or aperture setting accordingly to ensure the correct amount of salt you require is applied

4. *Write down results for future reference in the table provided (See next page).*

LDS -SPREADER SETTINGS CHART

MATERIAL	***TOWING VEHICLE***	***OPERATING SPEED (mph)***	***SPREAD WIDTH (m)***	***FEED GATE SETTING***

7 MAINTENANCE

⚠ **Always empty the hopper before any maintenance is carried out**

7.1 - DAILY

1. *Check the condition of the engagement mechanism and grease daily. Use the following procedure, firstly engage the drive, and then pump grease into the nipple.*

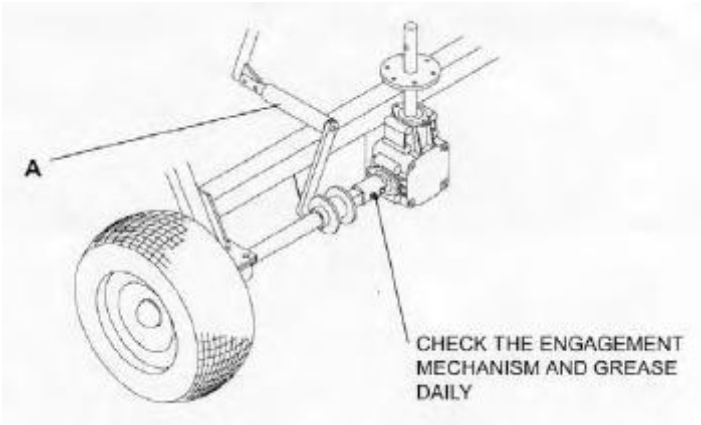

2. *Check the condition of the spreader, if any parts need replacing this should be carried out before operating the machine.*

3. *Check tyre pressures before use.*

4. *Check all nuts and bolts are secure before operating.*

5. *Check the condition of the swivel hitch bushes and replace if damaged or worn excessively.*

6. *Check the tension on drive chain and lubricate when necessary (LDS700 Only)*

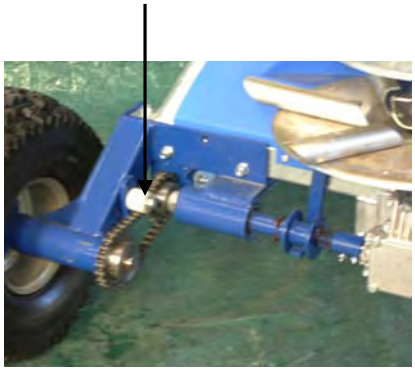

7. *Always wash the spreader thoroughly after use, spray a CORROSION INHIBITOR over the spreader disc and axle components to prevent corrosion. (LDS120DS version, see parts list)*

7.2 - SEASONAL

1. *Check the condition of the drive engagement lever and the plastic tube liner.*

2. *Check the wheel bearings for play and pack with grease every six months*

3. *Open the aperture and clean around the aperture blades and holes.*

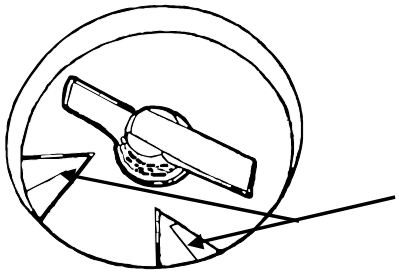

Clean aperture and aperture blades

4. *Periodically remove the agitator by removing the retaining pin located under the hopper.*

Remove pin

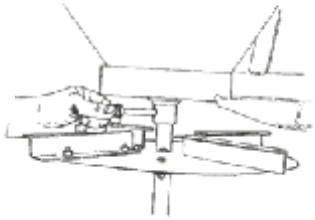

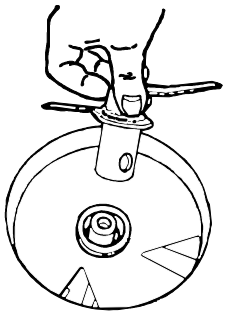

Remove agitator and remove residue

5. *Lift the agitator, clear of the shaft and remove any residue. Grease and replace the agitator. Ensure the retaining pin is re-fitted and held in place by the spring clip.*

6. *Check the oil level in the gearbox. To check, turn the spreader on its side, remove the filler plug located in the base, check that the oil is level with the rim of the hole, top up if necessary.*
   Change the gearbox oil (EP 90) every six months with normal use, or every three months under extreme conditions. The quantity of oil required is 300ml.

⚠ ***Maintenance should be undertaken regularly, good maintenance extends the life of the spreader.***

8 PARTS LIST: LDS120 / LDS120DS

8.1 – MAIN FRAME AND PARTS

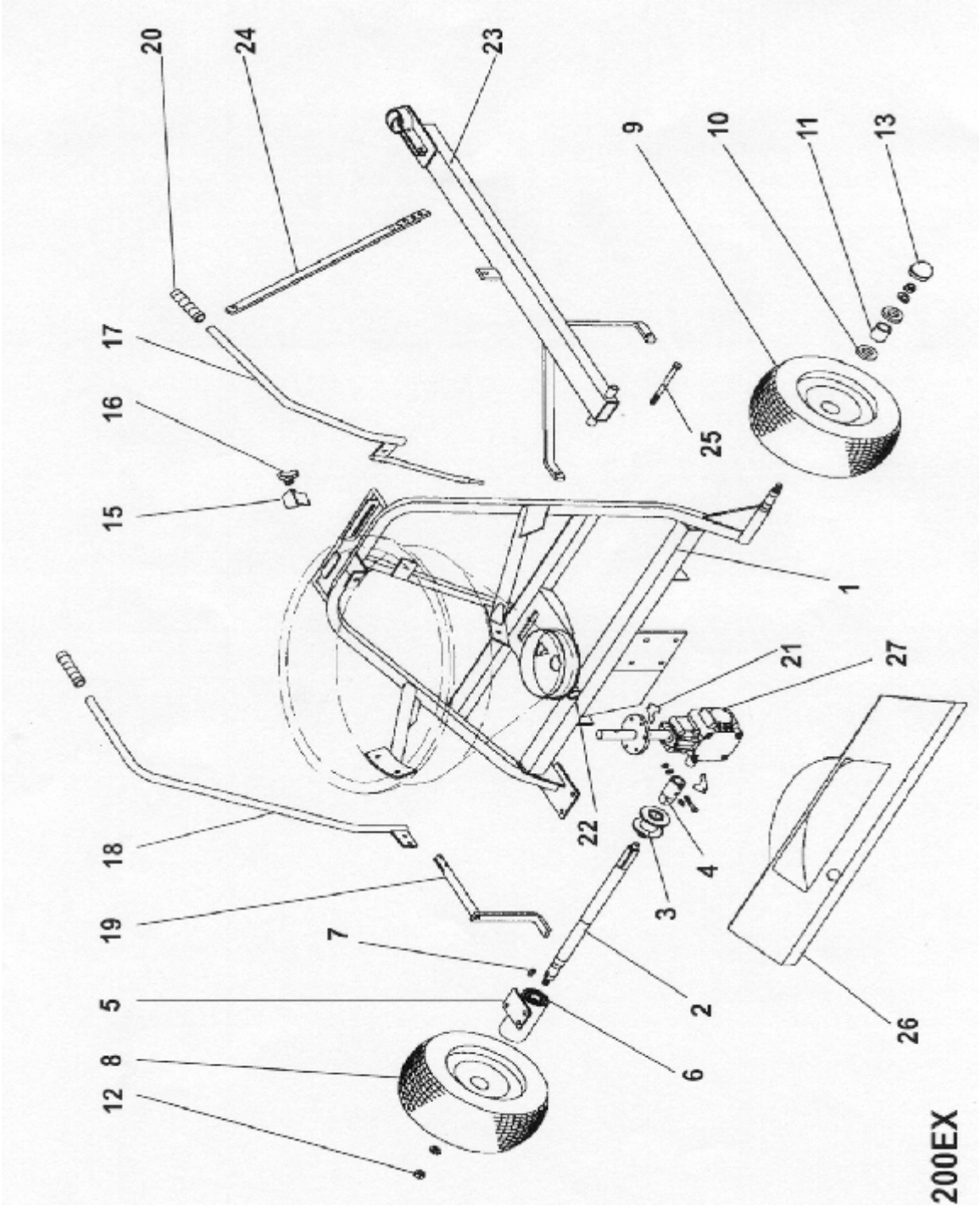

8.2 - PARTS LIST MAIN FRAME: LDS120 / LDS120DS

Item	Part Number	Description	Qty
1	LDS120-1001	FRAME	1
2	LDS120-1002	DRIVE AXLE	1
3	LDS120-1003	EASYLOCK HUB	1
4	LDS120-1004	DRIVE COUPLING	1
5	LDS120-1005	BEARING HOUSING	1
6	LDS120-1006	DRIVE AXLE BEARINGS	2
7	LDS120-1007	KEY	1
8	LDS120-1008	DRIVING WHEEL	1
9	LDS120-1009	NON DRIVING WHEEL	1
10	LDS120-1010	WHEEL BEARINGS	4
11	LDS120-1011	BEARING SPACER	2
12	LDS120-1012	WHEEL NUT	2
13	LDS120-1013	DUST CAP	2
14	LDS120-1014	TYRE	2
15	LDS120-1015	POINTER	1
16	LDS120-1016	STAR NUT	1
17	LDS120-1017	SHUTTER LEVER	1
18	LDS120-1018	DRIVE LEVER	1
19	LDS120-1019	DRIVE OPERATING LEVER	1
20	LDS120-1020	HAND GRIP	2
21	LDS120-1021	SHAFT GUARD	2
22	LDS120-1022	PLASTIC BUSH	1
23	LDS120-1023	TOW BAR	1
24	LDS120-1024	TOW BAR STAY	1
25	LDS120-1025	TOW BAR BOLT	1
26	LDS120-1026	SPINNER GUARD	1
27	LDS120-1027	GEARBOX	1

8.3 – SPINNER AND HOPPER DETAILS: LDS120 / LDS120DS

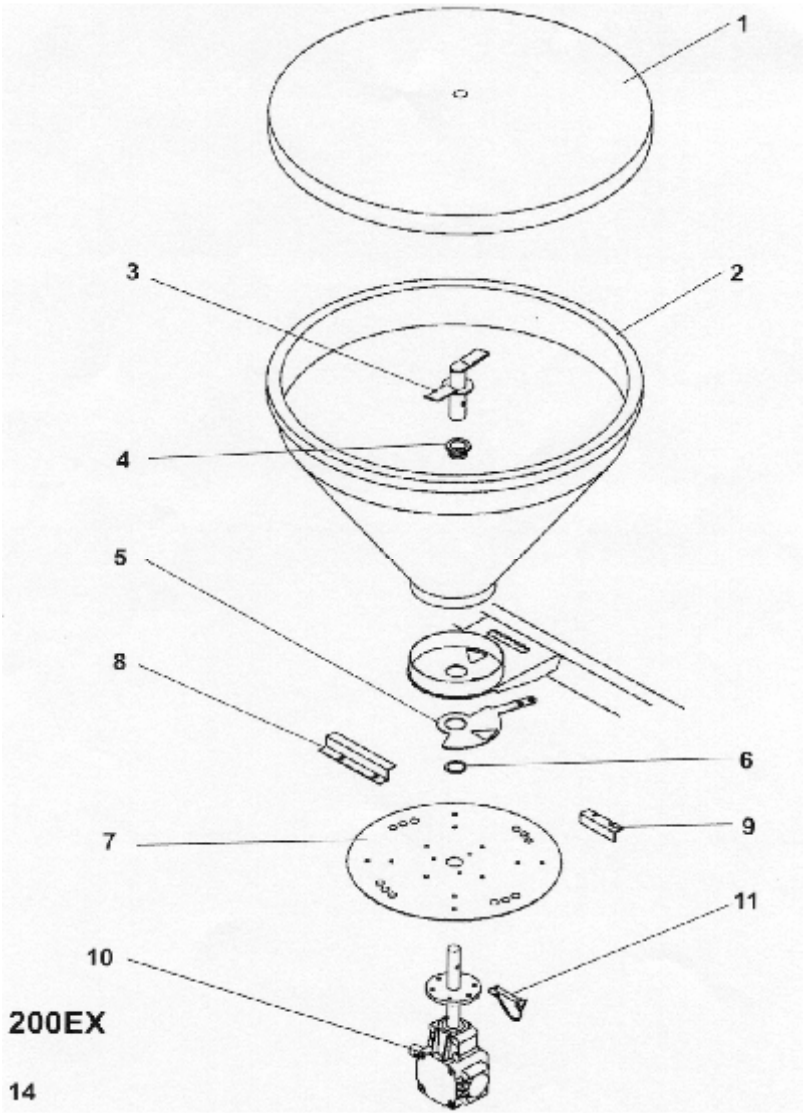

Item	Part Number	Description	Qty
1	LDS120-1028	LID - LDS120	1
2	LDS120-1029	HOPPER – LDS120	1
3	LDS120-1030	AGITATOR	1
4	LDS120-1031	AGITATOR BUSH	1
5	LDS120-1032	LOWER SHUTTER PLATE	1
6	LDS120-1033	CIRCLIP	1
7	LDS120-1034	SPINNER PLATE	1
8	LDS120-1035	SPINNER FIN	4
9	LDS120-1036	BLOWER FIN	4
10	LDS120-1027	GEARBOX	1
11	LDS120-1038	PIN	1
	MLU-021	CORROSION INHIBITOR (LDS120DS)	1 (Can)

8.4 – MAIN FRAME AND PARTS

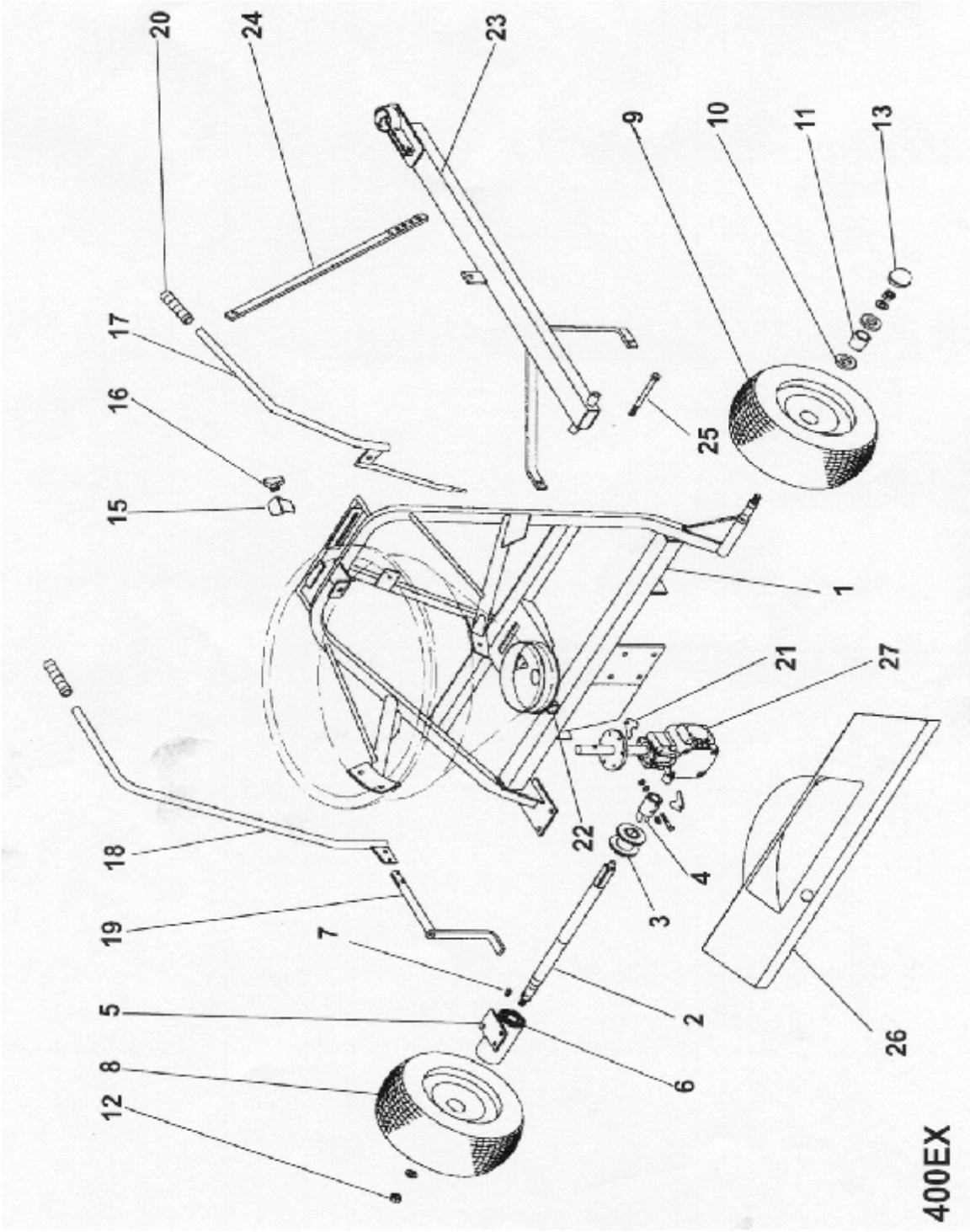

8.5 - PARTS LIST MAIN FRAME: LDS240/360

Item	Part Number	Description	Qty
1	LDS240-1001	FRAME	1
2	LDS120-1002	DRIVE AXLE	1
3	LDS120-1003	EASYLOCK HUB	1
4	LDS120-1004	DRIVE COUPLING	1
5	LDS120-1005	BEARING HOUSING	1
6	LDS120-1006	DRIVE AXLE BEARINGS	2
7	LDS120-1007	KEY	1
8	LDS240-1002	DRIVING WHEEL	1
9	LDS240-1003	NON DRIVING WHEEL	1
10	LDS120-1010	WHEEL BEARINGS	4
11	LDS120-1011	BEARING SPACER	2
12	LDS120-1012	WHEEL NUT	2
13	LDS120-1013	DUST CAP	2
14	LDS240-1004	TYRE	2
15	LDS120-1015	POINTER	1
16	LDS120-1016	STAR NUT	1
17	LDS120-1017	SHUTTER LEVER	1
18	LDS120-1018	DRIVE LEVER	1
19	LDS120-1019	DRIVE OPERATING LEVER	1
20	LDS120-1020	HAND GRIP	2
21	LDS120-1021	SHAFT GUARD	2
22	LDS120-1022	PLASTIC BUSH	1
23	LDS120-1023	TOW BAR	1
24	LDS120-1024	TOW BAR STAY	1
25	LDS120-1025	TOW BAR BOLT	1
26	LDS120-1026	SPINNER GUARD	1
27	LDS120-1027	GEARBOX	1

8.6 – SPINNER AND HOPPER DETAILS

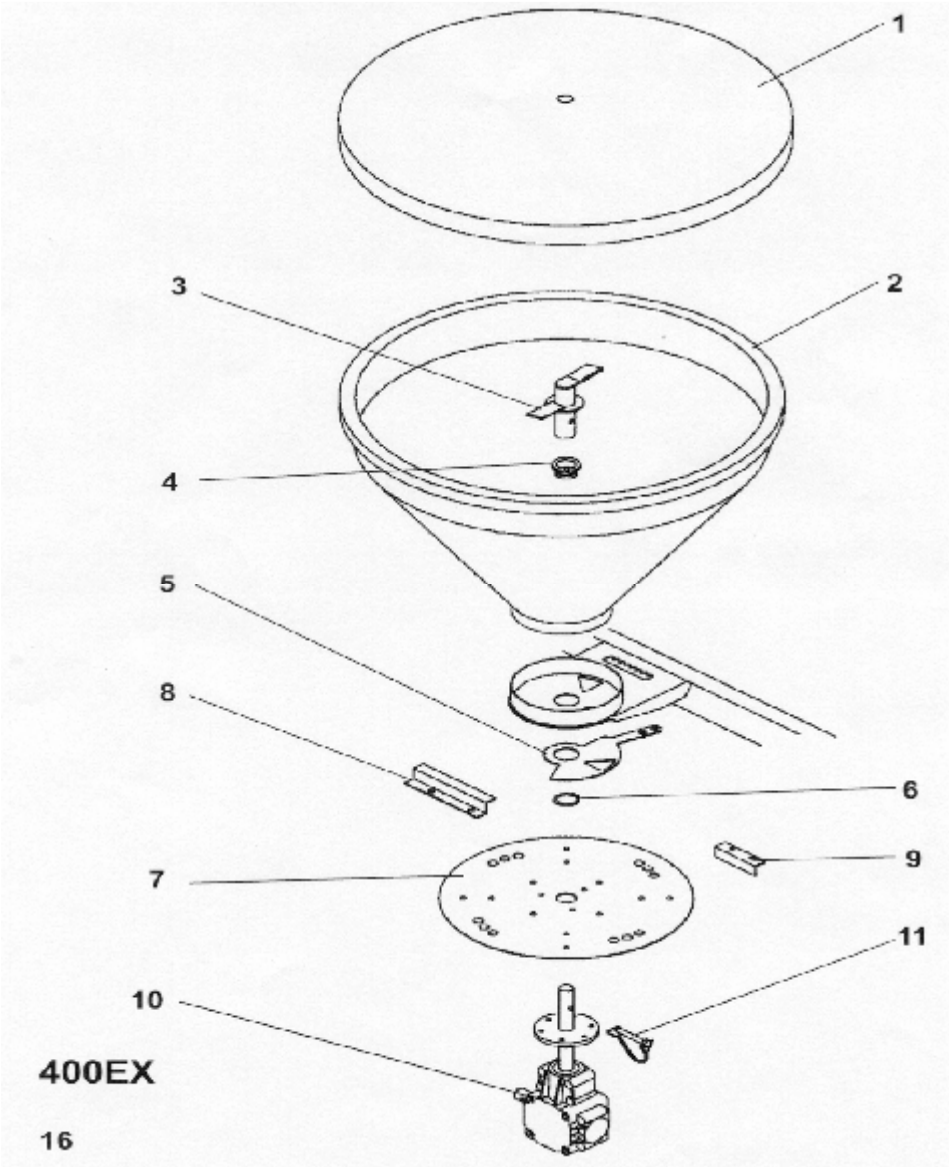

Item	Part Number	Description	Qty
1	LDS240-1005	LID – LDS240	1
2	LDS240-1006	HOPPER – LDS240	1
2	LDS240-1006	HOPPER – LDS360	1
	LDS360-1001	HOPPER EXTENSION – LDS360 (Not Shown)	1
	LDS360-1002	HOPPER FIXING BOLT C/W NUT & WASHER	6
3	LDS120-1030	AGITATOR	1
4	LDS120-1031	AGITATOR BUSH	1
5	LDS120-1032	LOWER SHUTTER PLATE	1
6	LDS120-1033	CIRCLIP	1
7	LDS120-1034	SPINNER PLATE	1
8	LDS120-1035	SPINNER FIN	4
9	LDS120-1036	BLOWER FIN	4
10	LDS120-1027	GEARBOX	1
11	LDS240-1038	PIN	1

8 PARTS LIST: LDS700

8.7– DRIVE ASSEMBLY: LDS700

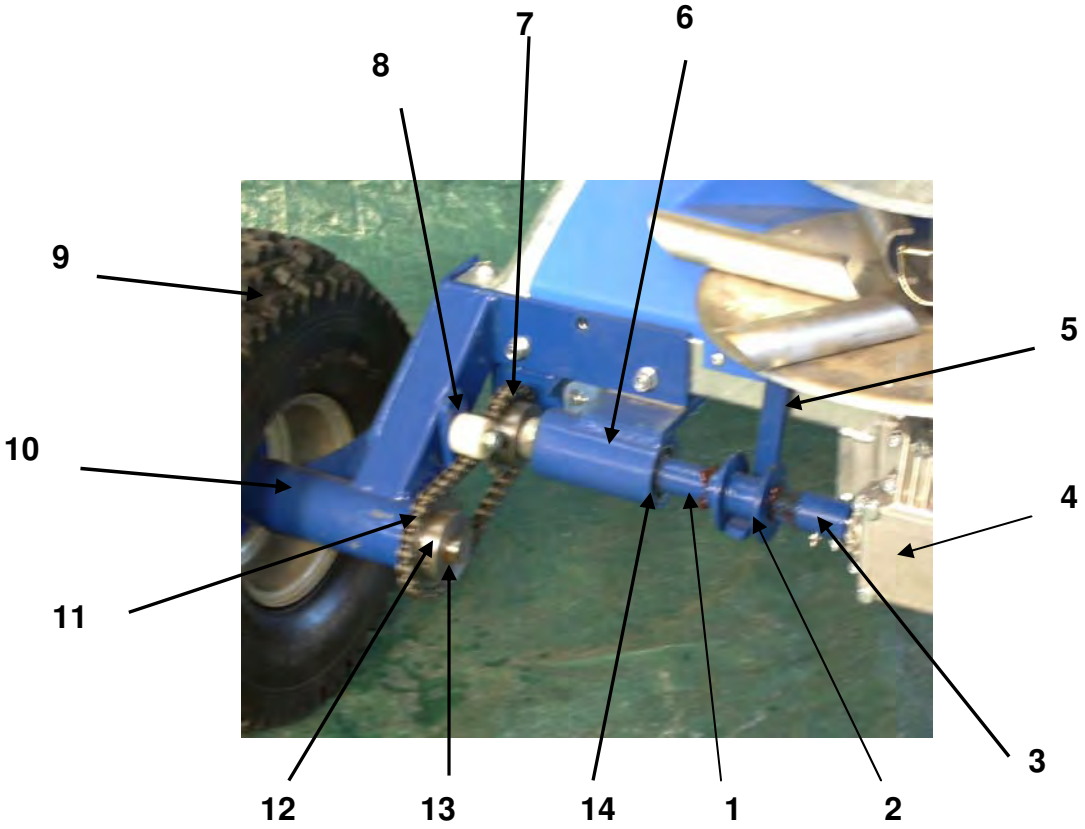

8.8- MAIN FRAME: LDS700

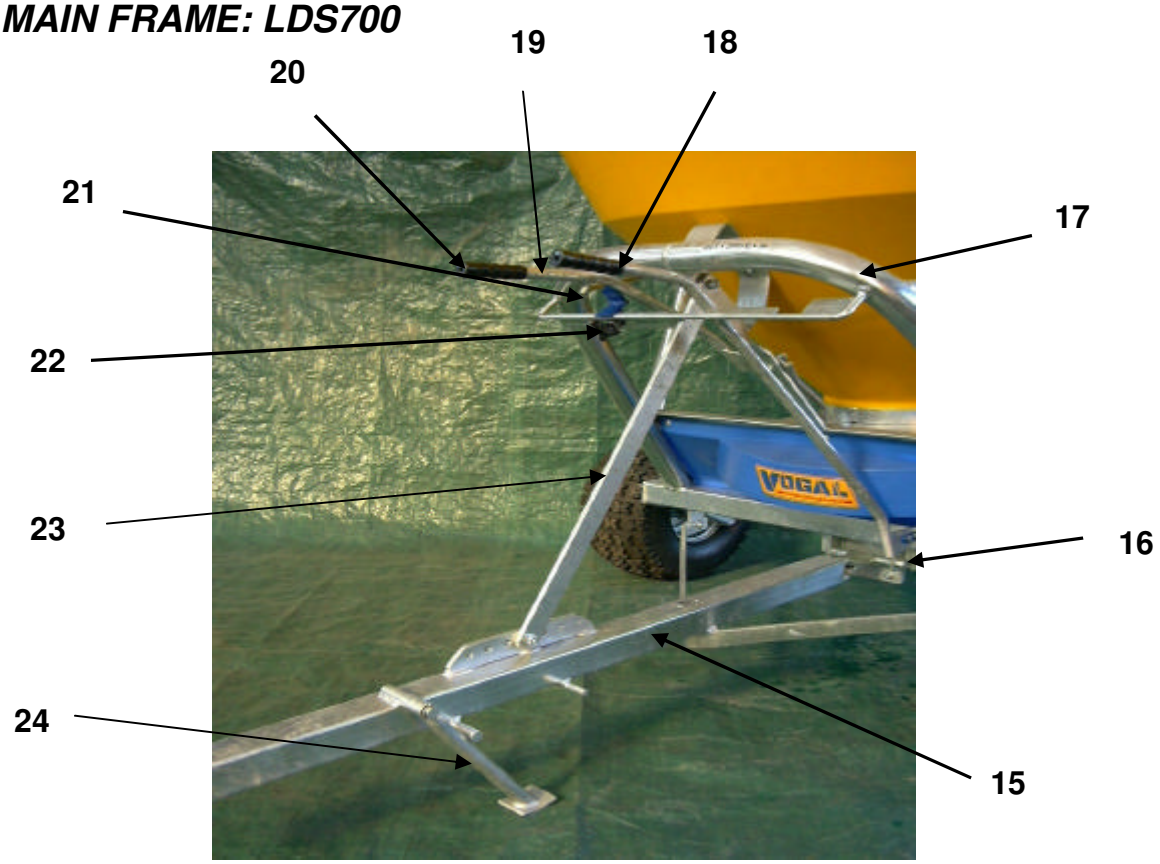

8.9 – WHEELS AND TYRES: LDS700

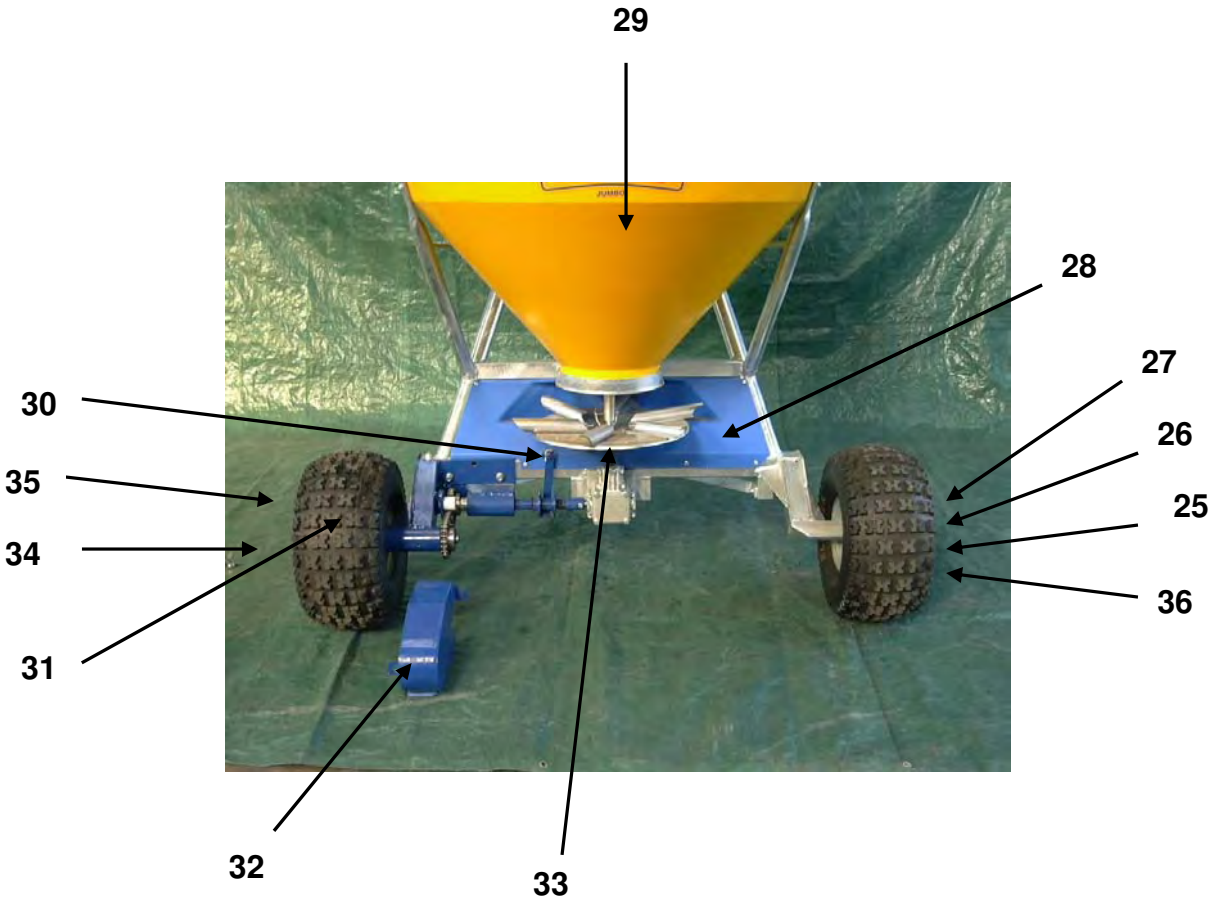

8.10 – SPINNER AND AGITATOR: LDS700

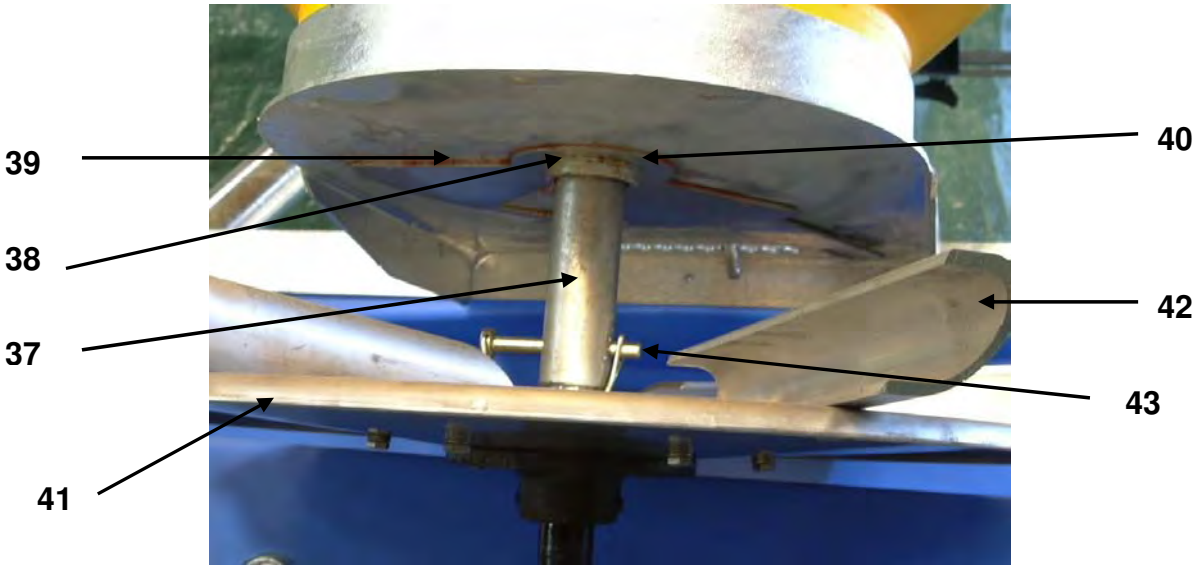

8.11 - PARTS LIST: LDS700

Item	Part Number	Description	Qty
1	LDS700-1001	DRIVE AXLE	1
2	LDS120-1003	EASYLOCK HUB	1
3	LDS120-1004	DRIVE COUPLING	1
4	LDS120-1027	GEARBOX	1
5	LDS120-1019	DRIVE OPERATING LEVER	1
6	LDS700-1002	BEARING HOUSING	1
7	LDS700-1003	DRIVEN SPROCKET	1
8	LDS700-1004	TENSIONER	1
9	LDS700-1005	DRIVING WHEEL RIM ONLY	1
10	LDS700-1006	DRIVE AXLE CARRIER	1
11	LDS700-1007	DRIVE CHAIN	1
12	LDS700-1008	DRIVING SPROCKET	1
13	LDS700-1009	DRIVE WHEEL AXLE	1
14	LDS120-1006	DRIVE AXLE BEARINGS	2
15	LDS700-1010	DRAWBAR	1
16	LDS120-1025	DRAWBAR FIXING BOLT	1
17	LDS700-1011	MAIN FRAME	1
18	LDS700-1012	DRIVE ENGAGEMENT LEVER	1
19	LDS700-1013	SHUTTER OFF LEVER	1
20	LDS120-1020	HAND GRIP	2
21	LDS700-1014	POINTER	1
22	LDS120-1016	STAR NUT	1
23	LDS700-1015	DRAWBAR STAY	1
24	LDS700-1016	PROP STAND	1
25	LDS700-1017	WHEEL RIM ONLY	1
26	LDS120-1011	BEARING SPACER	2
27	LDS120-1010	WHEEL BEARINGS	2
28	LDS700-1018	SPINNER GUARD	1
29	LDS700-1019	HOPPER 700LT	2
30	LDS120-1022	PLASTIC BUSH	1
31	LDS700-1020	TYRE	2
32	LDS700-1021	CHAIN GUARD	1
33	LDS120-1021	SHAFT GUARD	2
34	LDS120-1013	DUST CAP	1
35	LDS700-1022	HUB NUT	1
36	LDS700-1023	WHEEL NUT	4
37	LDS700-1024	AGITATOR	1
38	LDS120-1031	AGITATOR BUSH	1
39	LDS700-1025	LOWER SHUTTER PLATE	1
40	LDS120-1033	CIRCLIP	1
41	LDS700-1026	SPINNER PLATE	1
42	LDS700-1027	SPINNER FIN	4
43	LDS120-1038	PIN	1

9 LOGIC MANUFACTURING PRODUCTS OWNER GUARANTEE

This Logic Manufacturing product is guaranteed against faulty workmanship and materials for a period of 6 months from the date of purchase.

On Engine-Powered equipment, the engine manufactures guarantee will apply, any claims being subject to their terms and conditions.

All claims must be made in writing within 28 days of the alleged failure.

All claims must be made through the dealer who originally supplied the machine.

Any defective parts must be kept for inspection and if requested, sent to the factory or dealer.

The customer must bring equipment for repair to the dealer.

This guarantee becomes void if unauthorised modifications have been made, or if parts not manufactured, supplied or approved by Logic Manufacturing have been fitted to the machine.

We accept no liability for normal wear and tear, misuse or abuse, or where recommended maintenance has not been carried out.

All guarantee work must be authorised by Logic Manufacturing prior to any work being done. Work carried out without our consent may not be reimbursed.

DECLARATION OF CONFORMITY
93 / 44 EEC

LOGIC MANUFACTURING LTD
Foundry Industrial Estate
Bridge End
HEXHAM
Northumberland

Product Type: **LDS100 – VOGAL GROUND DRIVE SPREADER**

Covered By Technical File Number: **CE – LDS100**

Serial Number:

Standards And Regulations Used:

The Supply Of Machinery (Safety) Regulations 1992
HSE Guide Lines On ATV Equipment (Agric Sheet No. 11)

Place Of Issue: **United Kingdom**

Name Of Authorised Representative: **P. G. RIDLEY**

Position Of Authorised Representative: **RESEARCH & DEVELOPMENT MANAGER**

Declaration,

I declare that as the authorised representative, the above information in relation to the Supply / manufacture of this product, is in conformity with the stated standards and other related documents following the provisions of 93/68EEC directives

Signature Of Authorised Representative

Date: **10/03/05**