Pioneer sound.vision.soul

Service Manual

DEH-P640/XN/UC

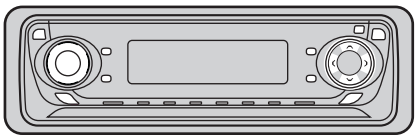

ORDER NO.
CRT2807

MULTI-CD CONTROL HIGH POWER CD PLAYER WITH FM/AM TUNER

DEH-P640 XN/UC
DEH-P6400 XN/UC
DEH-P6450 XN/ES

COMPACT disc DIGITAL AUDIO

● This service manual should be used together with the following manual(s):

Model No.	Order No.	Mech. Module	Remarks
CX-977	CRT2624	S9	CD Mech. Module:Circuit Description, Mech.Description, Disassembly

CONTENTS

1. SAFETY INFORMATION 3
2. EXPLODED VIEWS AND PARTS LIST 4
3. BLOCK DIAGRAM AND SCHEMATIC DIAGRAM ...14
4. PCB CONNECTION DIAGRAM 34
5. ELECTRICAL PARTS LIST 42
6. ADJUSTMENT.....53
7. GENERAL INFORMATION 62
7.1 DIAGNOSIS 62
7.1.1 DISASSEMBLY 62
7.1.2 CONNECTOR FUNCTION DESCRIPTION 66
7.2 IC 67
7.3 OPERATIONAL FLOW CHART 77
7.4 CLEANING 78
8. OPERATIONS AND SPECIFICATIONS.....79

For details, refer to "Important symbols for good services".

PIONEER CORPORATION 4-1, Meguro 1-Chome, Meguro-ku, Tokyo 153-8654, Japan
PIONEER ELECTRONICS (USA) INC. P.O.Box 1760, Long Beach, CA 90801-1760 U.S.A.
PIONEER EUROPE NV Haven 1087 Keetberglaan 1, 9120 Melsele, Belgium
PIONEER ELECTRONICS ASIACENTRE PTE.LTD. 253 Alexandra Road, #04-01, Singapore 159936

© PIONEER CORPORATION 2001

K-ZZY. DEC. 2001 Printed in Japan

[Important symbols for good services]
In this manual, the symbols shown-below indicate that adjustments, settings or cleaning should be made securely.
When you find the procedures bearing any of the symbols, be sure to fulfill them:

1. Product safety

You should conform to the regulations governing the product (safety, radio and noise, and other regulations), and should keep the safety during servicing by following the safety instructions described in this manual.

2. Adjustments

To keep the original performances of the product, optimum adjustments or specification confirmation is indispensable. In accordance with the procedures or instructions described in this manual, adjustments should be performed.

3. Cleaning

For optical pickups, tape-deck heads, lenses and mirrors used in projection monitors, and other parts requiring cleaning, proper cleaning should be performed to restore their performances.

4. Shipping mode and shipping screws

To protect the product from damages or failures that may be caused during transit, the shipping mode should be set or the shipping screws should be installed before shipping out in accordance with this manual, if necessary.

5. Lubricants, glues, and replacement parts

Appropriately applying grease or glue can maintain the product performances. But improper lubrication or applying glue may lead to failures or troubles in the product. By following the instructions in this manual, be sure to apply the prescribed grease or glue to proper portions by the appropriate amount.For replacement parts or tools, the prescribed ones should be used.

● CD Player Service Precautions

1. For pickup unit(CXX1480) handling, please refer to"Disassembly"(see page 62).
   During replacement, handling precautions shall be taken to prevent an electrostatic discharge(protection by a jumper-solder).
2. During disassembly, be sure to turn the power off since an internal IC might be destroyed when a connector is plugged or unplugged.
3. Please checking the grating after changing the service pickup unit(see page 56).

1. SAFETY INFORMATION

CAUTION

This service manual is intended for qualified service technicians; it is not meant for the casual do-it-yourselfer.
Qualified technicians have the necessary test equipment and tools, and have been trained to properly and safely repair complex products such as those covered by this manual.
Improperly performed repairs can adversely affect the safety and reliability of the product and may void the warranty.
If you are not qualified to perform the repair of this product properly and safely, you should not risk trying to do so and refer the repair to a qualified service technician.

WARNING

This product contains lead in solder and certain electrical parts contain chemicals which are known to the state of California to cause cancer, birth defects or other reproductive harm.
Health & Safety Code Section 25249.6 - Proposition 65

2. EXPLODED VIEWS AND PARTS LIST

2.1 PACKING (DEH-P640, P6400)

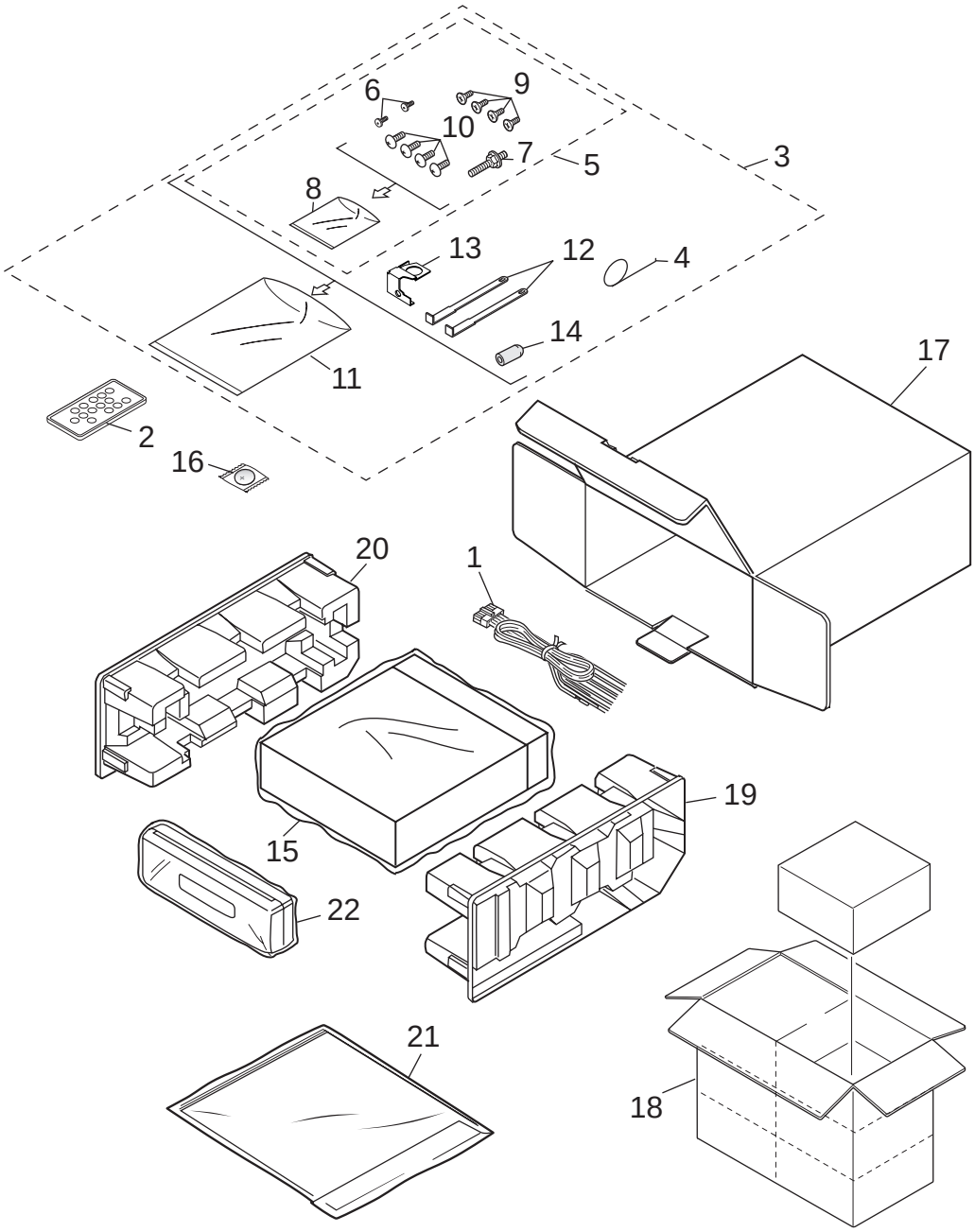

NOTE:

- Parts marked by "*" are generally unavailable because they are not in our Master Spare Parts List.
- Screws adjacent to ∇ mark on the product are used for disassembly.
- For the applying amount of lubricants or glue, follow the instructions in this manual.
  (In the case of no amount instructions, apply as you think it appropriate.)

(1) PACKING SECTION PARTS LIST (DEH-P640, P6400)

Mark	No.	Description	Part No.
	1	Cord Assy	CDE6438
	2	Remote Control Unit	CXB8743
	3	Accessory Assy	CEA2773
	4	Spring	CBH1650
	5	Screw Assy	CEA2796
	6	Screw	BPZ20P060FZK
	7	Screw	CBA1002
*	8	Polyethylene Bag	CEG-127
	9	Screw	CRZ50P090FMC
	10	Screw	TRZ50P080FMC
*	11	Polyethylene Bag	CEG-158
	12	Handle	CNC5395
	13	Earth Plate	CNC9450
	14	Bush	CNV3930
	15	Polyethylene Bag	CEG1173
*	16	Battery	CEX1065
	17	Carton	See Contrast table(2)
	18	Contain Box	See Contrast table(2)
	19	Protector	CHP2251
	20	Protector	CHP2252
	21-1	Owner's Manual	See Contrast table(2)
	21-2	Installation Manual	See Contrast table(2)
*	21-3	Caution Card	CRP1207
*	21-4	Warranty Card	See Contrast table(2)
*	21-5	Card	See Contrast table(2)
	21-6	Polyethylene Bag	CEG1116
	22	Case Assy	CXB3520

(2) CONTRAST TABLE

DEH-P640/XN/UC and DEH-P6400/XN/UC are constructed the same except for the following:

Mark No.	Symbol and Description	Part No. DEH-P640/XN/UC	Part No. DEH-P6400/XN/UC
17	Carton	CHG4615	CHG4616
18	Contain Box	CHL4615	CHL4616
21-1	Owner's Manual	CRD3516	CRD3517
21-2	Installation Manual	CRD3530	CRD3531
* 21-4	Warranty Card	CRY1070	Not used
* 21-5	Card	Not used	ARY1048

● Owner's Manual, Installation Manual

Model	Part No.	Language
DEH-P640/XN/UC	CRD3516	English, French
	CRD3530	English, French
DEH-P6400/XN/UC	CRD3517	English, French
	CRD3531	English, French

2.2 PACKING (DEH-P6450)

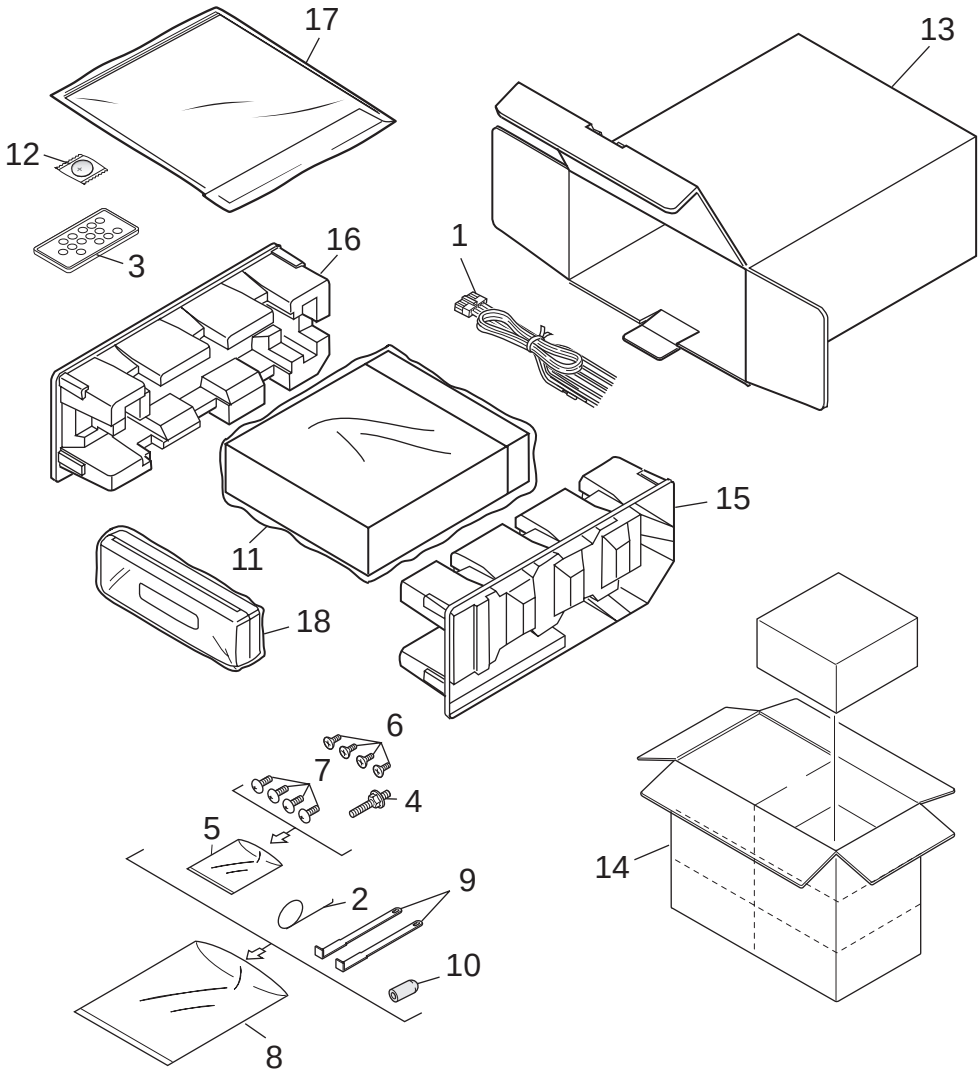

● PACKING SECTION PARTS LIST (DEH-P6450)

Mark	No.	Description	Part No.
	1	Cord Assy	CDE6438
	2	Spring	CBH1650
	3	Remote Control Unit	CXB8743
	4	Screw	CBA1002
*	5	Polyethylene Bag	CEG-127
	6	Screw	CRZ50P090FMC
	7	Screw	TRZ50P080FMC
*	8	Polyethylene Bag	CEG-158
	9	Handle	CNC5395
	10	Bush	CNV3930
	11	Polyethylene Bag	CEG-162
*	12	Battery	CEX1065
	13	Carton	CHG4614
	14	Contain Box	CHL4614
	15	Protector	CHP2251
	16	Protector	CHP2252
	17-1	Owner’s Manual	CRD3518
	17-2	Owner’s Manual	CRD3519
	17-3	Installation Manual	CRD3532
*	17-4	Caution Card	CRP1207
	17-5	Polyethylene Bag	CEG1116
	18	Case Assy	CXB3520

● Owner's Manual, Installation Manual

Part No.	Language
CRD3518	English, Spanish
CRD3519	Portuguese(B), Arabic
CRD3532	English, Spanish, Portuguese(B), Arabic

2.3 EXTERIOR

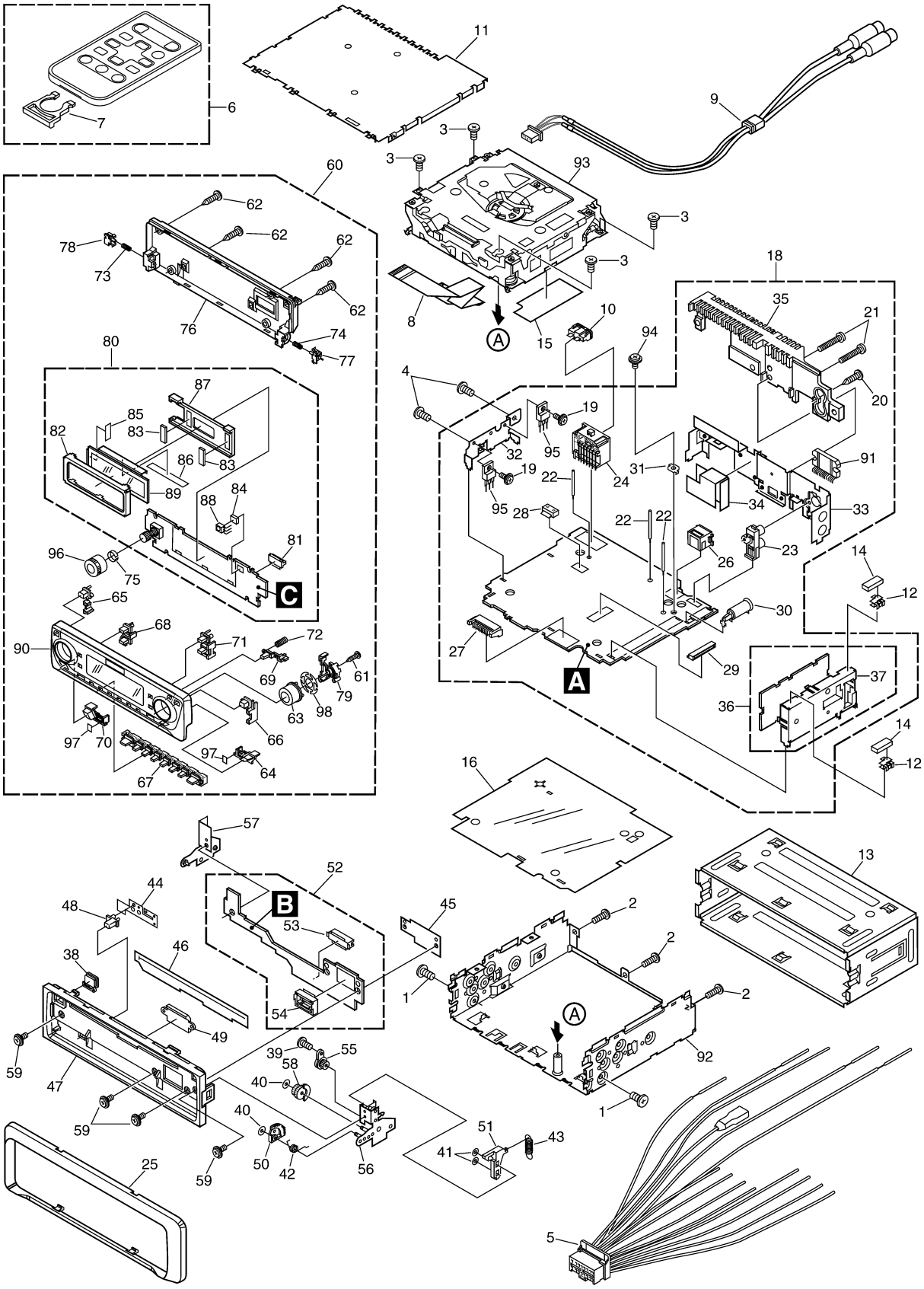
6
7
11
9
3
3
93
3
3
60
62
62
62
62
78
73
76
74
77
8
Ⓐ
15
10
94
18
35
21
20
80
87
85
83
82
86
83
89
84
88
81
96
75
C
65
68
90
71
72
69
61
79
63
98
66
97
70
97
64
67
4
19
95
32
19
95
22
24
31
91
34
33
28
22
22
26
23
14
12
30
27
A
29
37
36
14
12
16
57
52
B
53
44
48
45
2
2
2
13
38
46
1
54
Ⓐ
92
49
59
47
39
55
58
40
1
59
40
51
43
41
25
59
50
42
56
5

(1) EXTERIOR SECTION PARTS LIST

Mark	No.	Description	Part No.
	1	Screw	BMZ30P040FZK
	2	Screw	BMZ30P100FMC
	3	Screw	BSZ26P060FMC
	4	Screw	BSZ30P040FMC
	5	Cord Assy	CDE6438
	6	Remote Control Unit	CXB8743
	7	Cover	CNS7068
	8	Cable	CDE6714
	9	Cord Assy	CDE6454
	10	Fuse(10A)	CEK1136
	11	Case	CNB2686
	12	Holder	CNC5704
	13	Holder	CNC8659
	14	Cushion	CNM4870
	15	Insulator	CNM7214
	16	Insulator	CNM7629
	17	•••••	
	18	Tuner Amp Unit	See Contrast table(2)
	19	Screw	ASZ26P060FMC
	20	Screw	BPZ26P120FMC
	21	Screw	BSZ26P160FMC
	22	Clamper	CEF1007
	23	Pin Jack(CN351)	CKB1035
	24	Plug(CN901)	CKM1330
	25	Panel	See Contrast table(2)
	26	Connector(CN101)	CKS3408
	27	Plug(CN801)	CKS3537
	28	Connector(CN352)	CKS3598
	29	Connector(CN653)	CKS3835
	30	Antenna Jack(CN401)	CKX1056
	31	Holder	CNC5399
	32	Holder	CNC8615
	33	Holder	CNC9470
	34	Insulator	CNM6949
	35	Heat Sink	CNR1583
	36	FM/AM Tuner Unit	CWE1563
	37	Holder	CNC8815
	38	Button(EJECT)	CAC6839
	39	Screw(M2x2)	CBA1176
	40	Washer	CBF1038
	41	Washer	CBF1039
	42	Spring	CBH2428
	43	Spring	CBH2429
	44	Spring	CBL1512
	45	Holder	CNC9096
	46	Cover	CNM6854
	47	Panel	CNS6278
	48	Pin	CNV6486
	49	Lighting Conductor	CNV6487
	50	Gear	CNV6507
	51	Arm	CNV6508
	52	Panel Unit	CWM7986
	53	Socket(CN1850)	CKS3550
	54	Connector(CN1851)	CKS4462
	55	Damper Unit	CXB5070
	56	Holder Unit	CXB6356
	57	Holder Unit	CXB6357
	58	Clutch Unit	CXB6358
	59	Screw	IMS20P045FZK
	60	Detach Grille Assy	See Contrast table(2)
	61	Screw	BPZ20P080FMC
	62	Screw	BPZ20P100FZK
	63	Button(SELECT)	CAC7220
	64	Button(SFEQ)	CAC7221
	65	Button(ENT)	See Contrast table(2)
	66	Button(AUDIO)	See Contrast table(2)
	67	Button(1-6)	CAC7225
	68	Button(DISP)	CAC7226
	69	Button(OPEN)	CAC7227
	70	Button(EQ)	CAC7231
	71	Button(FUNC)	CAC7489
	72	Spring	CBH2630
	73	Spring	CBH2431
	74	Spring	CBH2430
	75	Spring	CBL1470
	76	Cover	CNS6740
	77	Holder	CNV6505
	78	Holder	CNV6506
	79	Holder	CNV6909
	80	Keyboard Unit	See Contrast table(2)
	81	Connector(CN1901)	CKS4524
	82	Holder	CNC9642
	83	Cushion	CNM6633
	84	Cushion	CNM7469
	85	Spacer	CNM7697
	86	Spacer	CNM7698
	87	Holder	CNV6910
	88	IC(IC1903)	TSOP1840SB3V
	89	OEL Unit	MXS8017
	90	Sub Grille Assy	See Contrast table(2)
	91	IC(IC301)	PAL007A
	92	Chassis Unit	CXB6100
	93	CD Mechanism Module(S9ANA)	CXK5501
	94	Screw	ISS26P055FUC
	95	Transistor(Q921,999)	2SD2396
*	96	Knob	CAA2697
	97	Spacer	CNM7807
	98	Cushion	CNM7808

(2) CONTRAST TABLE

DEH-P640/XN/UC, DEH-P6400/XN/UC and DEH-P6450/XN/ES are constructed the same except for the following:

Mark No.	Symbol and Description	Part No.		
		DEH-P640/XN/UC	DEH-P6400/XN/UC	DEH-P6450/XN/ES
18	Tuner Amp Unit	CWM8149	CWM8316	CWM8097
25	Panel	CNS6935	CNS6934	CNS6935
60	Detach Grille Assy	CXB8427	CXB8494	CXB8244
65	Button(ENT)	CAC7253	CAC7303	CAC7253
66	Button(AUDIO)	CAC7254	CAC7224	CAC7254
80	Keyboard Unit	CWM8098	CWM7990	CWM7990
90	Sub Grille Assy	CXB8946	CXB8947	CXB8948

2.4 CD MECHANISM MODULE

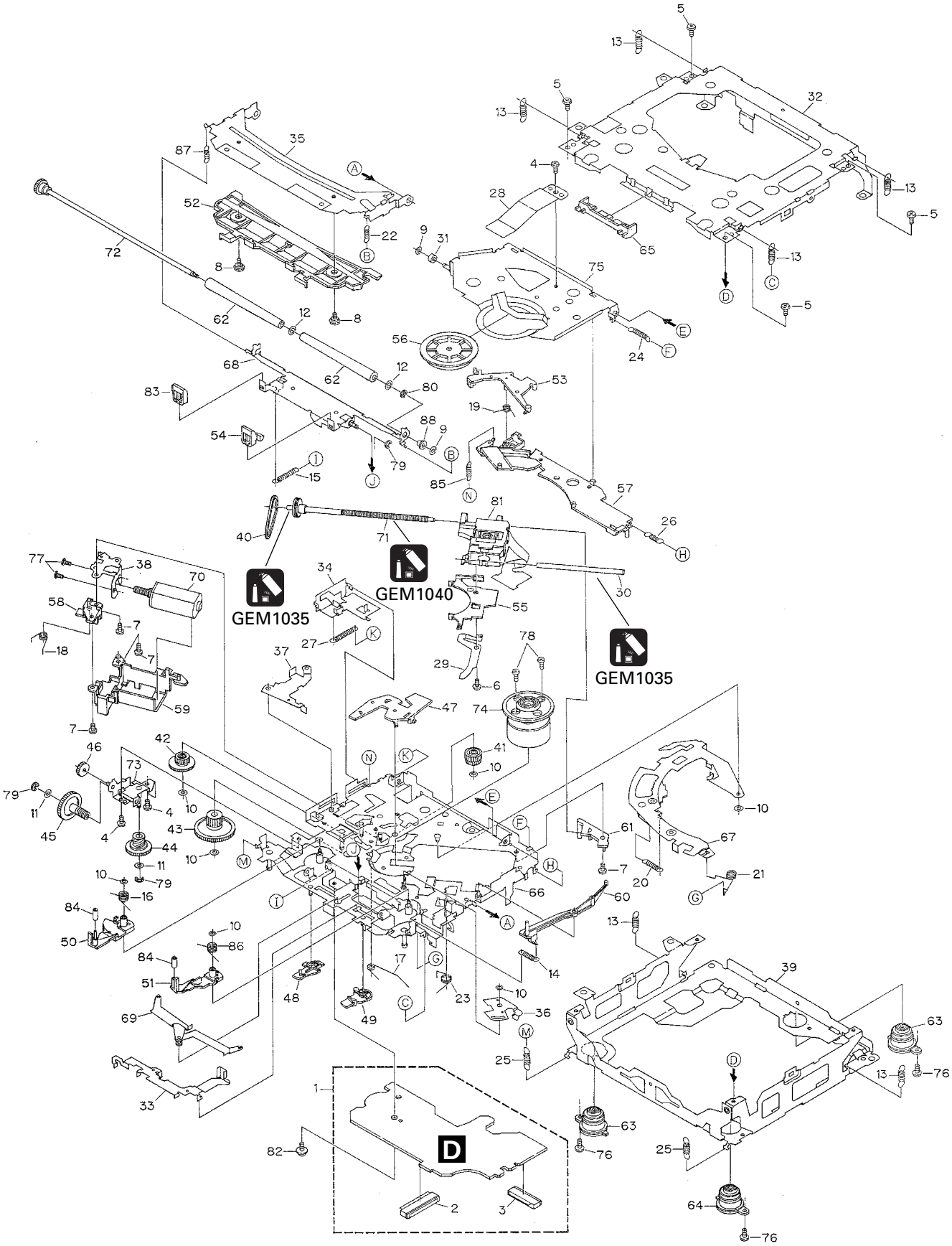

● CD MECHANISM MODULE SECTION PARTS LIST

Mark	No.	Description	Part No.
	1	Control Unit	CWX2481
	2	Connector(CN701)	CKS1959
	3	Connector(CN101)	CKS3486
	4	Screw	BMZ20P025FMC
	5	Screw	BSZ20P040FMC
	6	Screw(M2x4)	CBA1362
	7	Screw(M2x3)	CBA1527
	8	Screw	CBA1545
	9	Washer	CBF1037
	10	Washer	CBF1038
	11	Washer	CBF1039
	12	Washer	CBF1060
	13	Spring	CBH2378
	14	Spring	CBH2379
	15	Spring	CBH2514
	16	Spring	CBH2533
	17	Spring	CBH2382
	18	Spring	CBH2383
	19	Spring	CBH2384
	20	Spring	CBH2527
	21	Spring	CBH2386
	22	Spring	CBH2537
	23	Spring	CBH2390
	24	Spring	CBH2391
	25	Spring	CBH2523
	26	Spring	CBH2426
	27	Spring	CBH2444
	28	Spring	CBL1561
	29	Spring	CBL1553
	30	Shaft	CLA3845
	31	Roller	CLA3910
	32	Frame	CNC9654
	33	Lever	CNC9664
	34	Lever	CNC8949
	35	Arm	CNC9661
	36	Arm	CNC9016
	37	Arm	CNC9017
	38	Bracket	CNC9123
	39	Frame	CNC9656
	40	Belt	CNT1086
	41	Gear	CNV6886
	42	Gear	CNV6316
	43	Gear	CNV6317
	44	Gear	CNV6318
	45	Gear	CNV6319
	46	Gear	CNV6320
	47	Arm	CNV6322
	48	Arm	CNV6323
	49	Arm	CNV6324
	50	Arm	CNV6888
	51	Arm	CNV6889
	52	Guide	CNV6327
	53	Arm	CNV6924
	54	Guide	CNV6921
	55	Rack	CNV6923
	56	Clamper	CNV6331
	57	Arm	CNV6332
	58	Guide	CNV6333
	59	Cover	CNV6334
	60	Arm	CNV6335
	61	Guide	CNV6336
	62	Roller	CNV6338
	63	Damper	CNV6339
	64	Damper	CNV6340
	65	Guide	CNV6925
	66	Chassis Unit	CXB7980
*	67	Arm Unit	CXB7983
	68	Arm Unit	CXB7984
	69	Arm Unit	CXB7985
	70	Motor Unit(M2)	CXB5903
	71	Screw Unit	CXB5904
	72	Gear Unit	CXB8076
	73	Bracket Unit	CXB7982
	74	Motor Unit(M1)	CXB6007
	75	Arm Unit	CXB8504
	76	Screw(M2x5)	EBA1028
	77	Screw	JFZ20P020FMC
	78	Screw	JGZ17P020FZK
	79	Washer	YE15FUC
	80	Washer	YE20FUC
	81	Pickup Unit(Service)(P9)	CXX1480
	82	Screw	IMS26P030FMC
	83	Guide	CNV6922
	84	Roller	CNV6887
	85	Spring	CBH2509
	86	Spring	CBH2512
	87	Spring	CBH2536
	88	Collar	CNV6906

3. BLOCK DIAGRAM AND SCHEMATIC DIAGRAM

3.1 BLOCK DIAGRAM

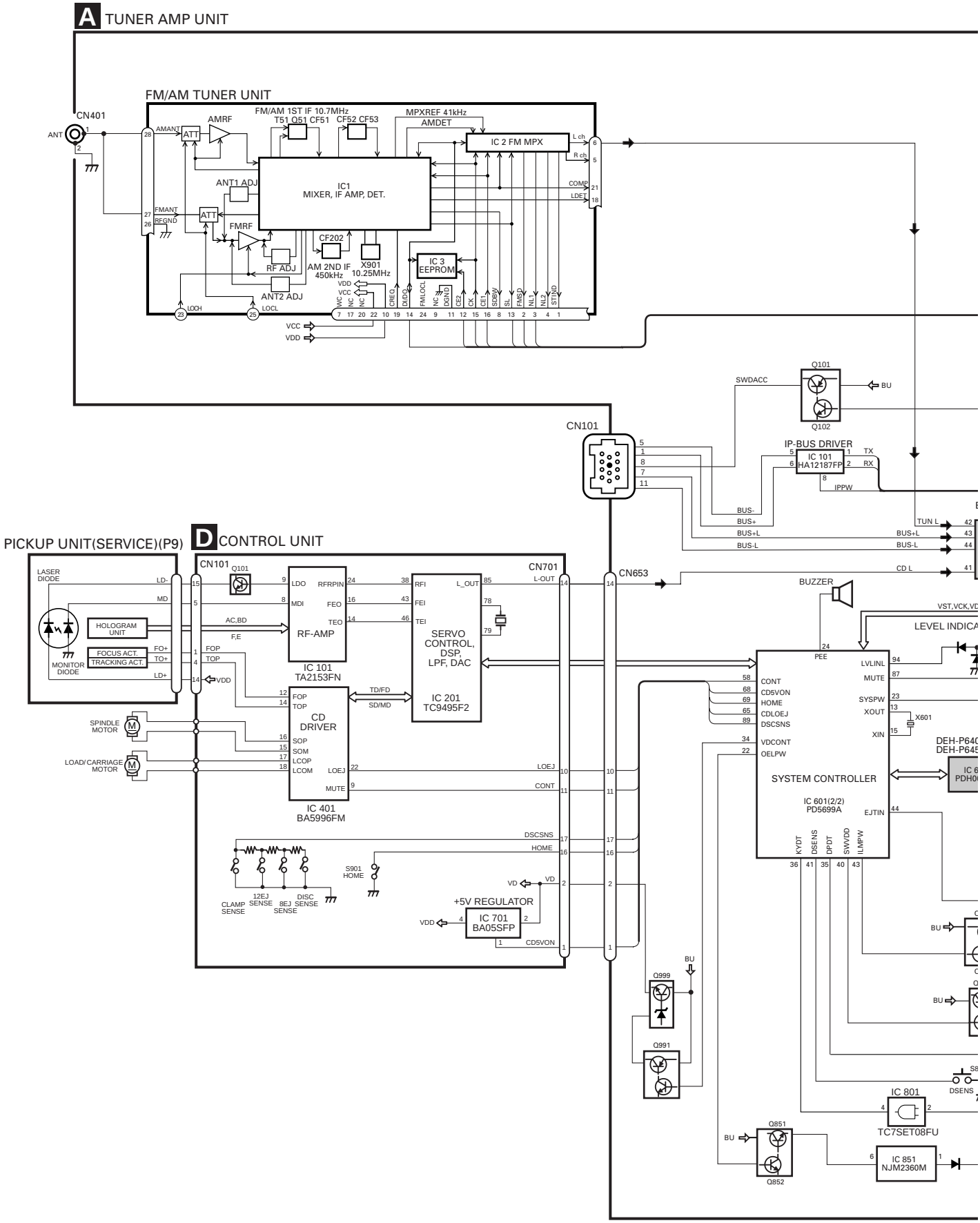

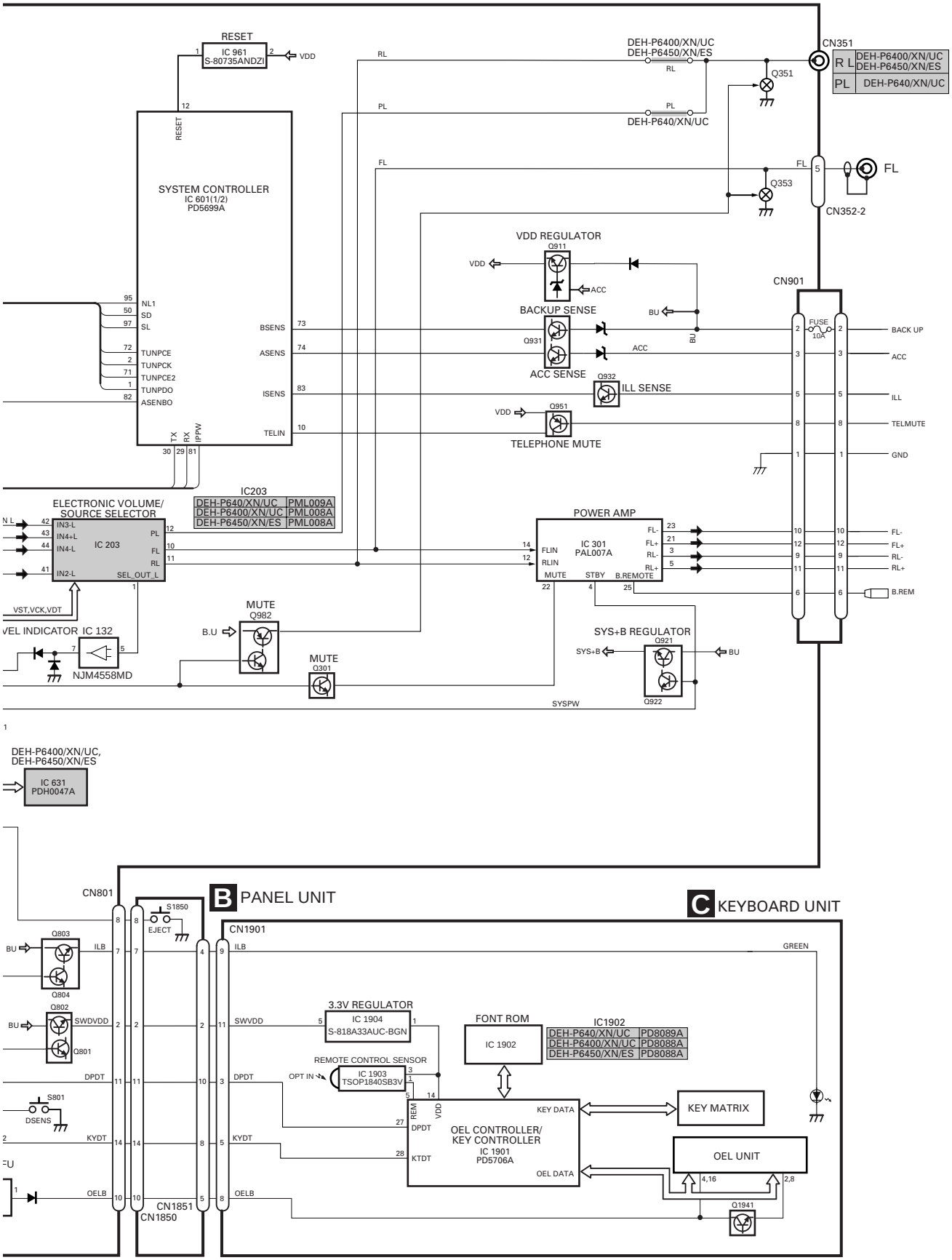
RESET
IC 961
S-80735ANDZI
VDD
SYSTEM CONTROLLER
IC 601(1/2)
PD5699A
NL1
SD
SL
TUNPCE
TUNPCK
TUNPCE2
TUNPDO
ASENBO
BSENS
ASENS
ISENS
TELIN
TX
RX
IPPW
DEH-P6400/XN/UC
DEH-P6450/XN/ES
DEH-P640/XN/UC
RL
PL
FL
Q351
Q353
CN351
R L
DEH-P6400/XN/UC
DEH-P6450/XN/ES
PL
DEH-P640/XN/UC
CN352-2
VDD REGULATOR
Q911
ACC
BACKUP SENSE
Q931
BU
ACC SENSE
Q932
ILL SENSE
Q951
TELEPHONE MUTE
CN901
FUSE
10A
BACK UP
ACC
ILL
TELMUTE
GND
IC203
DEH-P640/XN/UC PML009A
DEH-P6400/XN/UC PML008A
DEH-P6450/XN/ES PML008A
ELECTRONIC VOLUME/
SOURCE SELECTOR
IC 203
IN3-L
IN4+L
IN4-L
IN2-L
SEL_OUT_L
VST,VCK,VDT
POWER AMP
IC 301
PAL007A
FLIN
RLIN
MUTE
STBY
B.REMOTE
FL-
FL+
RL-
RL+
B.REM
MUTE
Q982
B.U
MUTE
Q301
SYS+B REGULATOR
Q921
SYS+B
Q922
SYSPW
VEL INDICATOR IC 132
NJM4558MD
DEH-P6400/XN/UC,
DEH-P6450/XN/ES
IC 631
PDH0047A
CN801
B PANEL UNIT
S1850
EJECT
Q803
Q804
Q802
Q801
SWDVDD
DPDT
S801
DSENS
KYDT
OELB
CN1851
CN1850
C KEYBOARD UNIT
CN1901
ILB
GREEN
SWVDD
3.3V REGULATOR
IC 1904
S-818A33AUC-BGN
FONT ROM
IC 1902
IC1902
DEH-P640/XN/UC PD8089A
DEH-P6400/XN/UC PD8088A
DEH-P6450/XN/ES PD8088A
REMOTE CONTROL SENSOR
OPT IN
IC 1903
TSOP1840SB3V
REM
VDD
KEY DATA
KEY MATRIX
OEL CONTROLLER/
KEY CONTROLLER
IC 1901
PD5706A
KTDT
OEL DATA
OEL UNIT
Q1941

3.2 OVERALL CONNECTION DIAGRAM(GUIDE PAGE)(DEH-P640)

Note: When ordering service parts, be sure to refer to "EXPLODED VIEWS AND PARTS LIST" or "ELECTRICAL PARTS LIST".

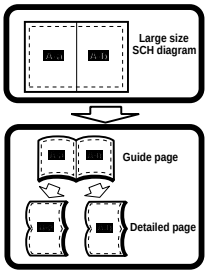

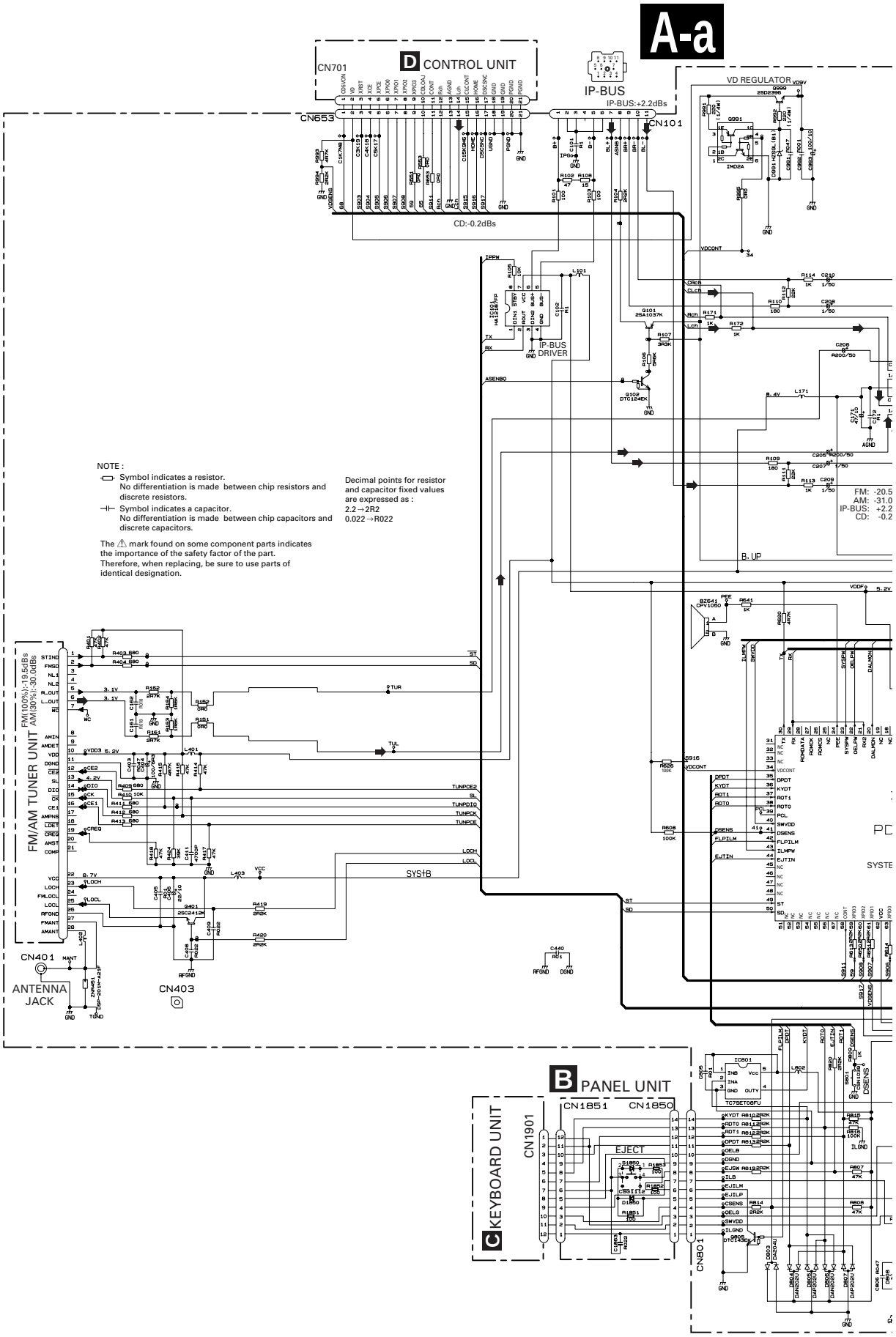

A-b

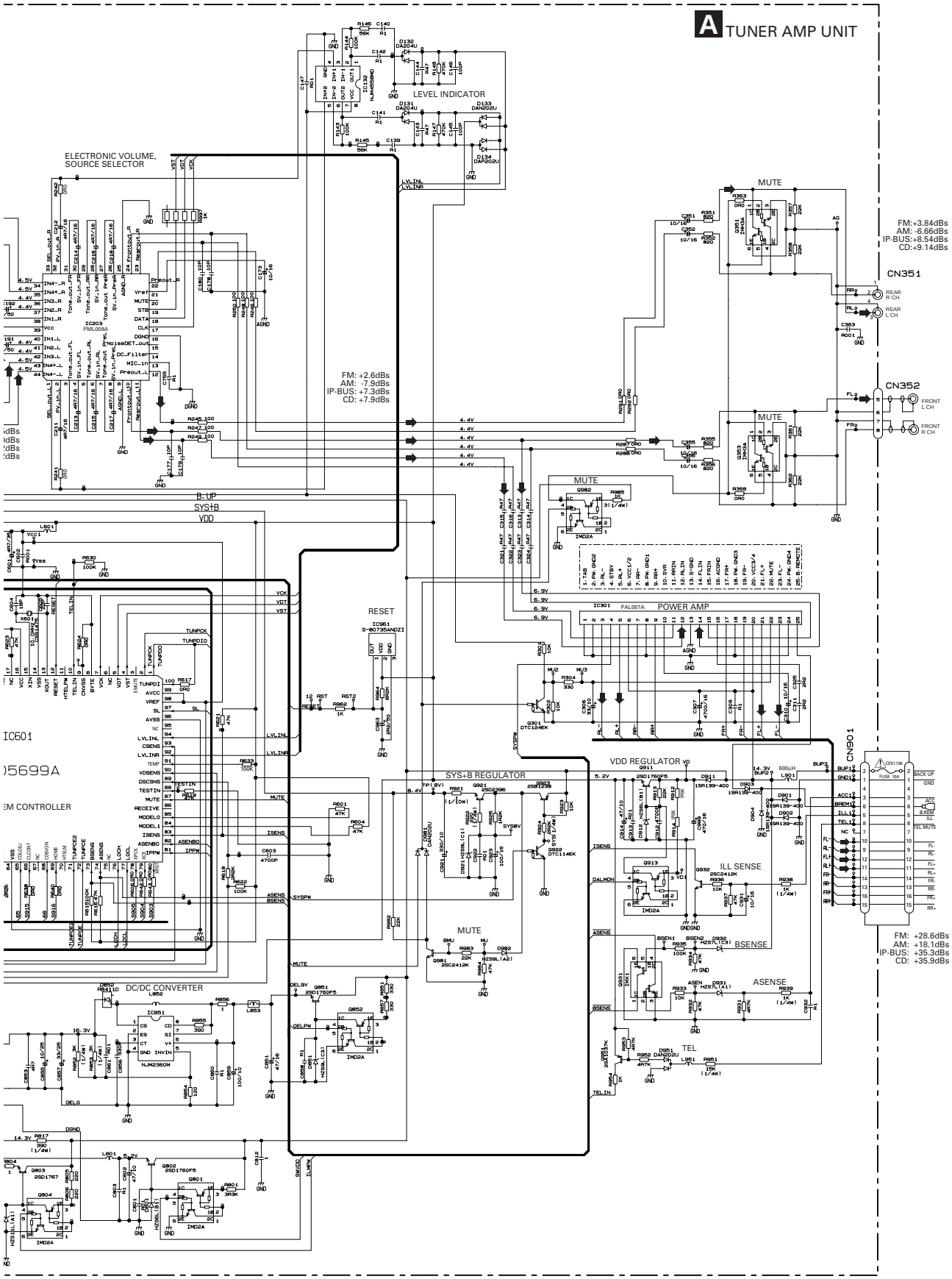
A TUNER AMP UNIT
LEVEL INDICATOR
ELECTRONIC VOLUME, SOURCE SELECTOR
MUTE
FM:+3.84dBs
AM: -6.66dBs
IP-BUS:+8.54dBs
CD:+9.14dBs
CN351
REAR R CH
REAR L CH
CN352
FRONT L CH
FRONT R CH
FM: +2.6dBs
AM: -7.9dBs
IP-BUS: +7.3dBs
CD: +7.9dBs
B-UP
SYS+B
VDD
RESET
POWER AMP
IC601
SYS+B REGULATOR
VDD REGULATOR
CN901
ILL SENSE
BSENSE
ASENSE
TEL
DC/DC CONVERTER
FM: +28.6dBs
AM: +18.1dBs
IP-BUS: +35.3dBs
CD: +35.9dBs

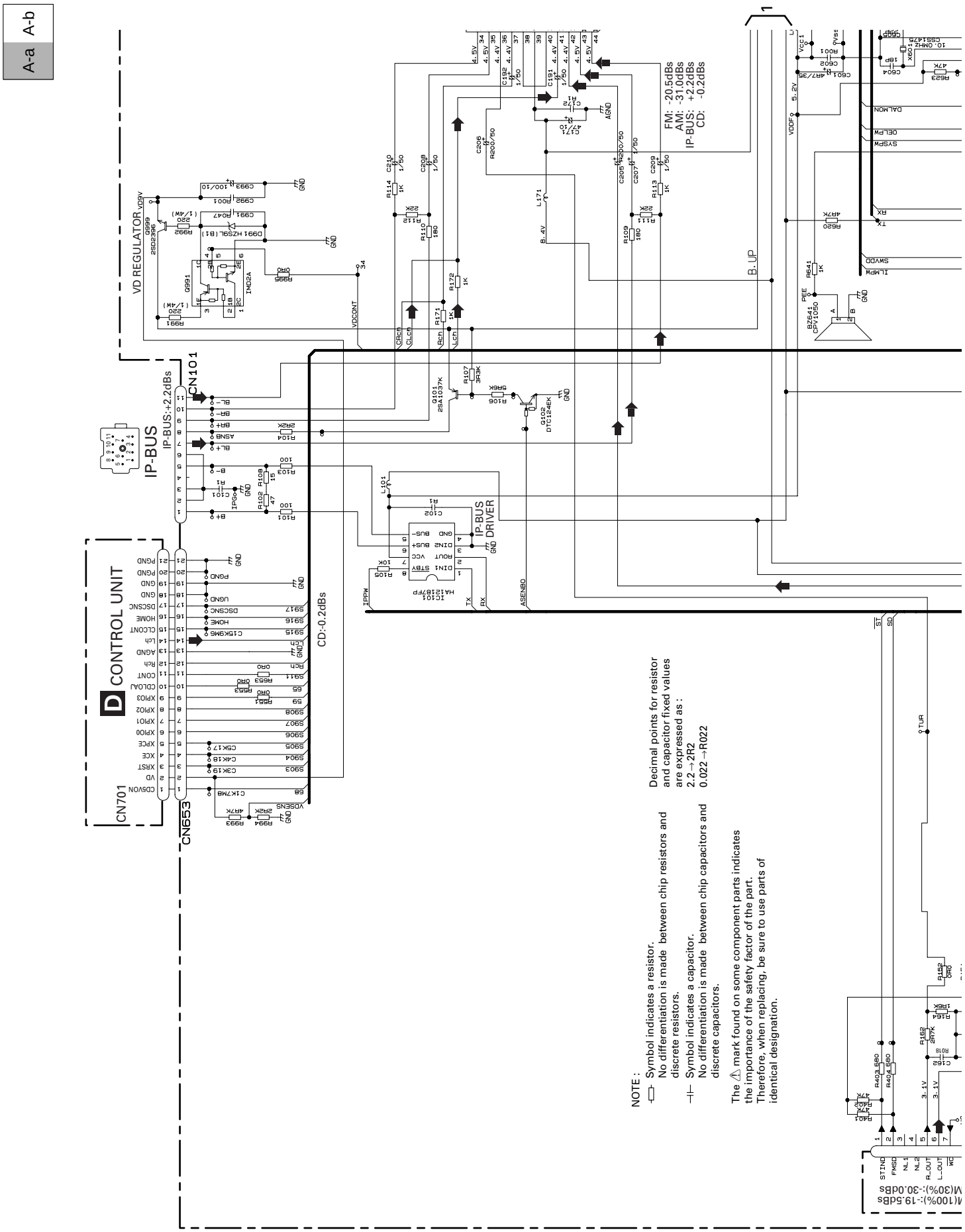
A-a
A-b
VD REGULATOR
IP-BUS
IP-BUS:+2.2dBs
CN101
CONTROL UNIT
CN701
CN653
CD:-0.2dBs
IP-BUS DRIVER
FM: -20.5dBs
AM: -31.0dBs
IP-BUS: +2.2dBs
CD: -0.2dBs
Decimal points for resistor and capacitor fixed values are expressed as :
2.2→2R2
0.022→R022
NOTE :
Symbol indicates a resistor. No differentiation is made between chip resistors and discrete resistors.
Symbol indicates a capacitor. No differentiation is made between chip capacitors and discrete capacitors.
The ⚠ mark found on some component parts indicates the importance of the safety factor of the part. Therefore, when replacing, be sure to use parts of identical designation.

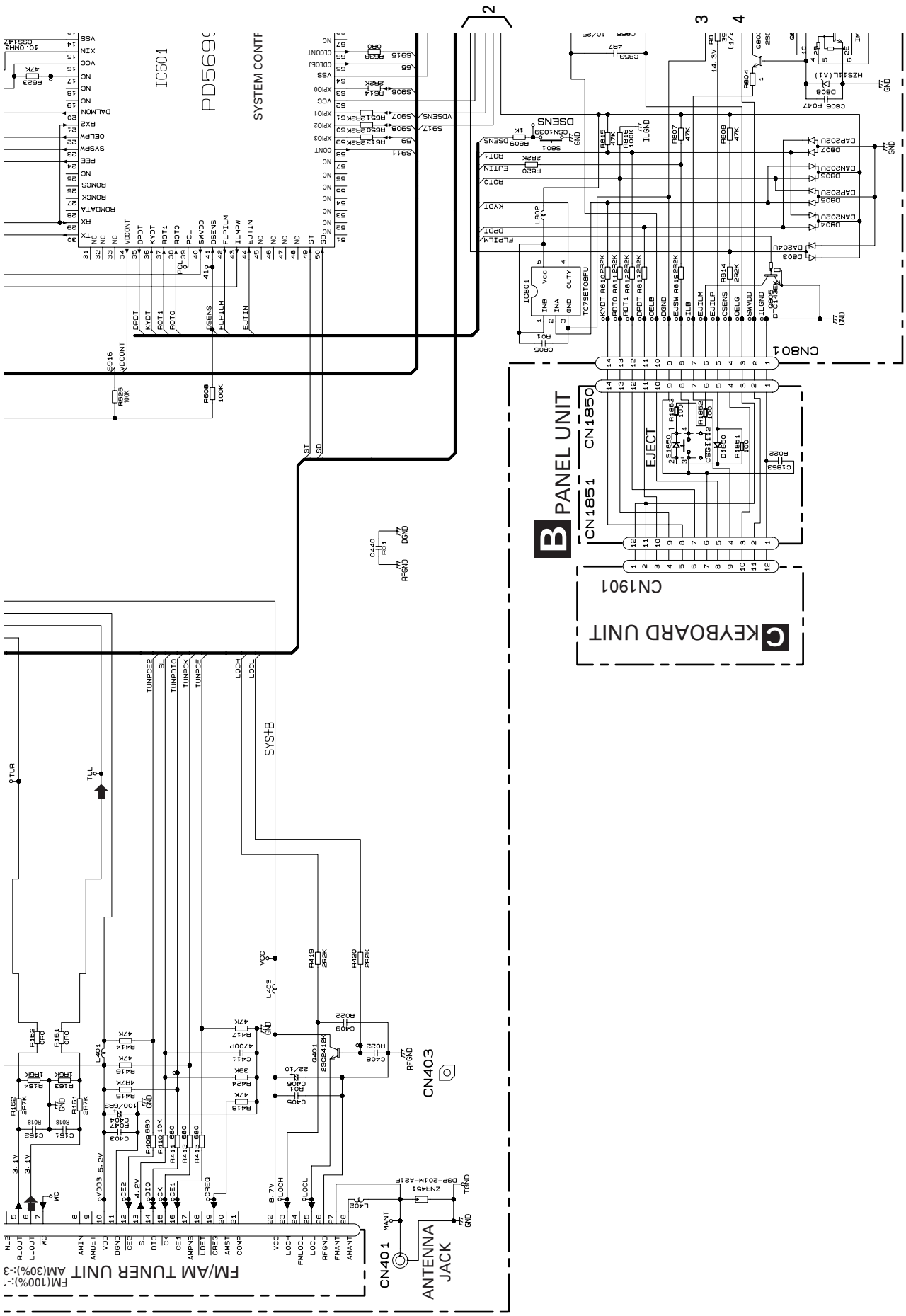
IC601
PD5690
SYSTEM CONTR
CN801
PANEL UNIT
CN1850
CN1851
EJECT
CN1901
KEYBOARD UNIT
SYSTB
CN403
CN401
ANTENNA JACK
FM/AM TUNER UNIT
A-a
A-b
B

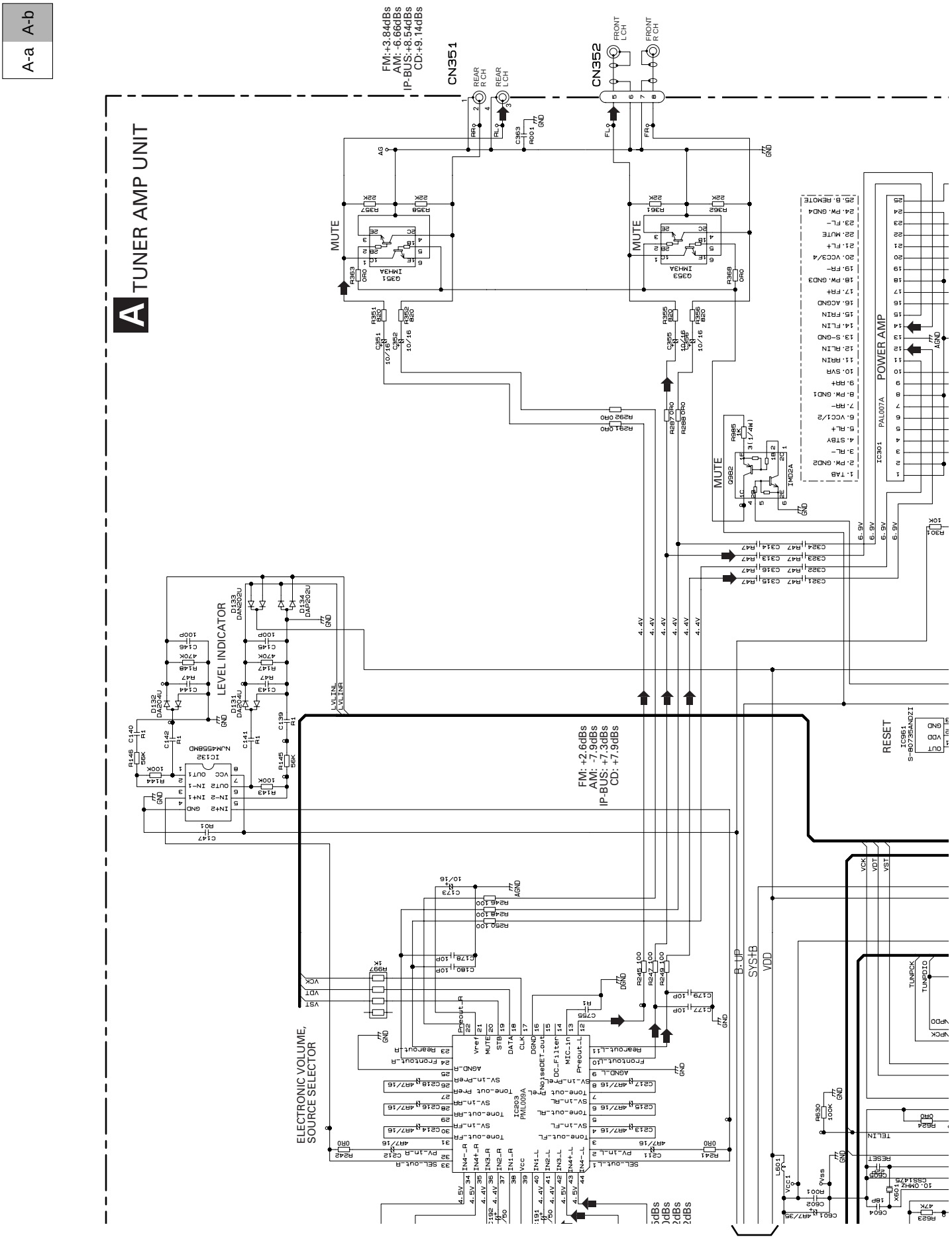
A-a
A-b
A TUNER AMP UNIT
CN351
CN352
FM:+3.84dBs
AM: -6.66dBs
IP-BUS:+8.54dBs
CD:+9.14dBs
REAR R CH
REAR L CH
FRONT L CH
FRONT R CH
MUTE
LEVEL INDICATOR
POWER AMP
PAL007A
IC301
RESET
IC961
S-80735ANDZI
FM: +2.6dBs
AM: -7.9dBs
IP-BUS: +7.3dBs
CD: +7.9dBs
ELECTRONIC VOLUME,
SOURCE SELECTOR
IC203
PML009A
IC132
NJM4558MD
B-UP
SYS+B
VDD
GND
AGND
DGND
TUNPCK
TUNPDIO
TEL IN
RESET
VCK
VDT
VST

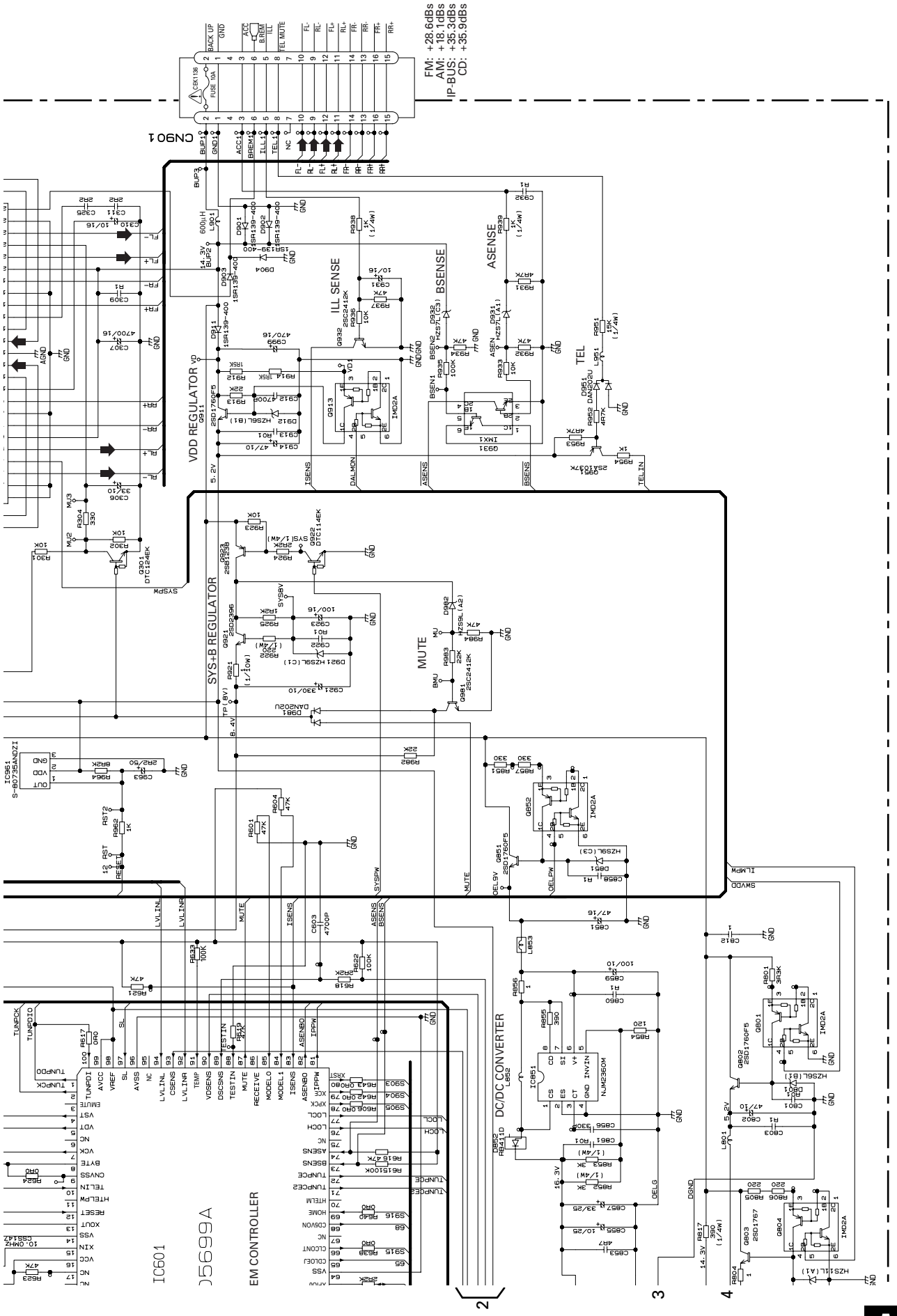
FM: +28.6dBs
AM: + 18.1dBs
IP-BUS: +35.3dBs
CD: +35.9dBs
CN901
VDD REGULATOR
ILL SENSE
BSENSE
ASENSE
TEL
SYS+B REGULATOR
MUTE
DC/DC CONVERTER
IC601
EM CONTROLLER

3.3 OVERALL CONNECTION DIAGRAM(GUIDE PAGE)(DEH-P6400, P6450)

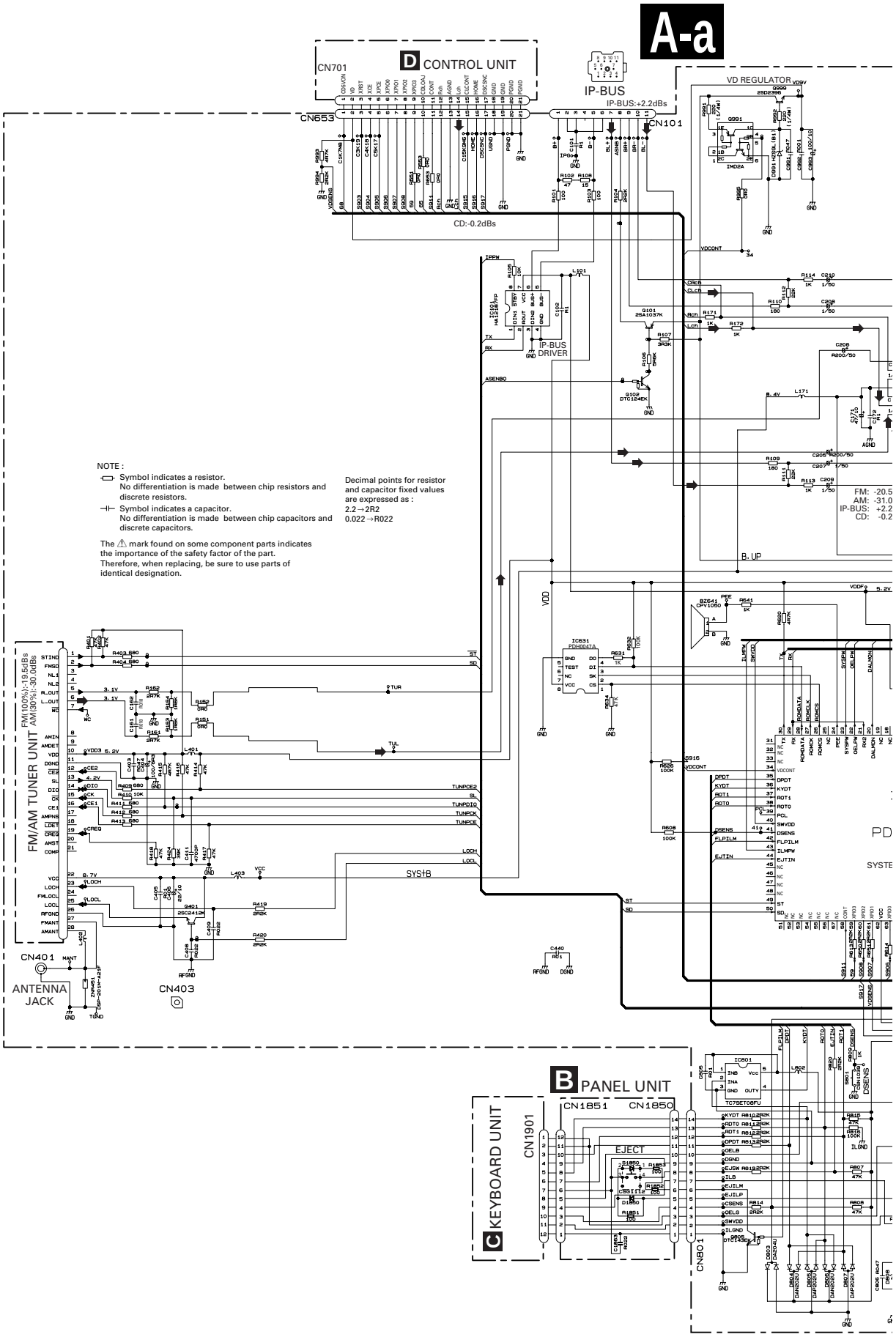

A-b

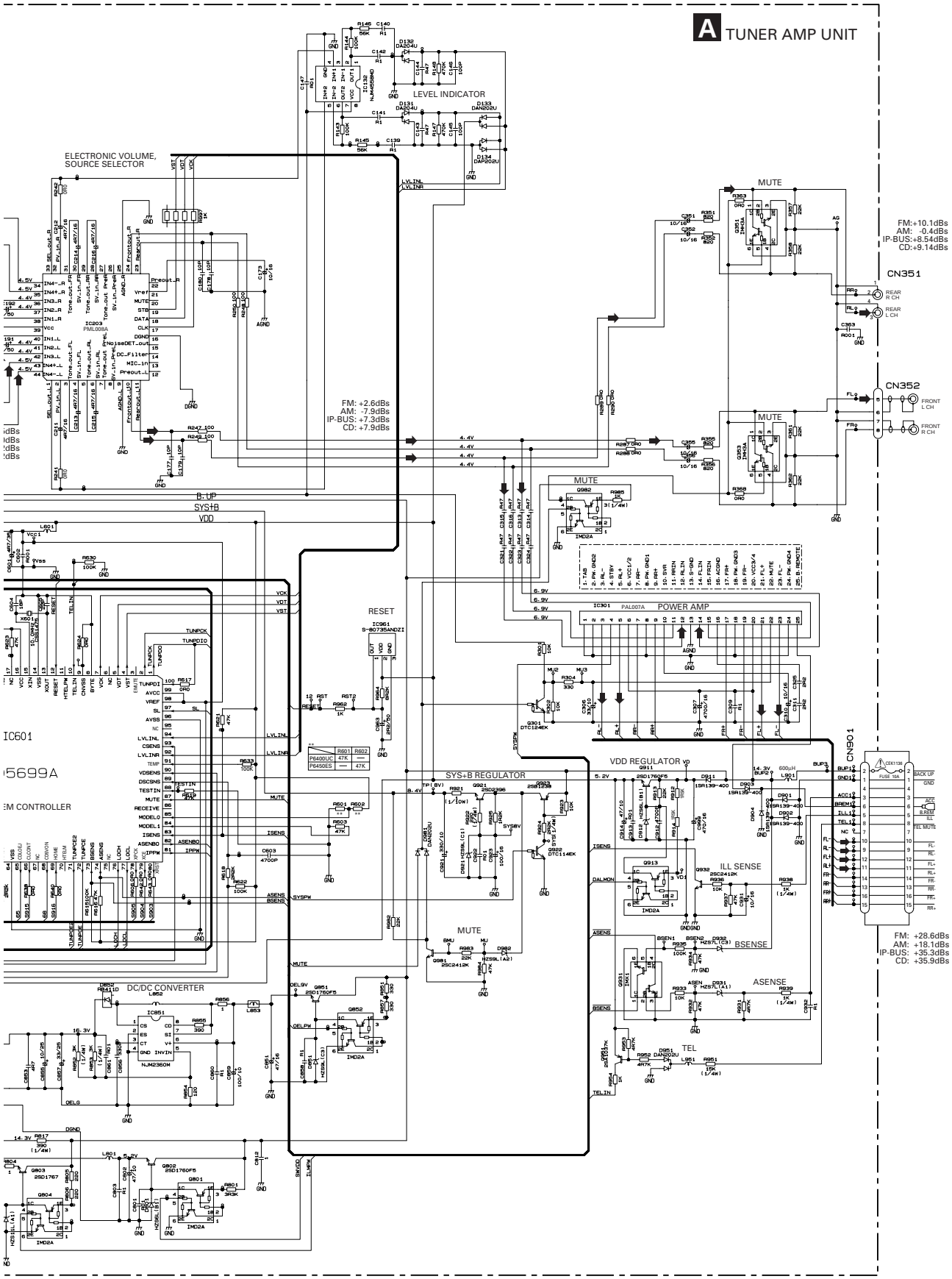
A TUNER AMP UNIT
LEVEL INDICATOR
ELECTRONIC VOLUME, SOURCE SELECTOR
MUTE
FM:+10.1dBs
AM: -0.4dBs
IP-BUS:+8.54dBs
CD:+9.14dBs
CN351
REAR R CH
REAR L CH
CN352
FRONT L CH
FRONT R CH
FM: +2.6dBs
AM: -7.9dBs
IP-BUS: +7.3dBs
CD: +7.9dBs
B_UP
SYS+B
VDD
RESET
POWER AMP
IC601
5699A
EM CONTROLLER
SYS+B REGULATOR
VDD REGULATOR
ILL SENSE
BSENSE
ASENSE
TEL
DC/DC CONVERTER
CN901
FM: +28.6dBs
AM: +18.1dBs
IP-BUS: +35.3dBs
CD: +35.9dBs

A-a A-b

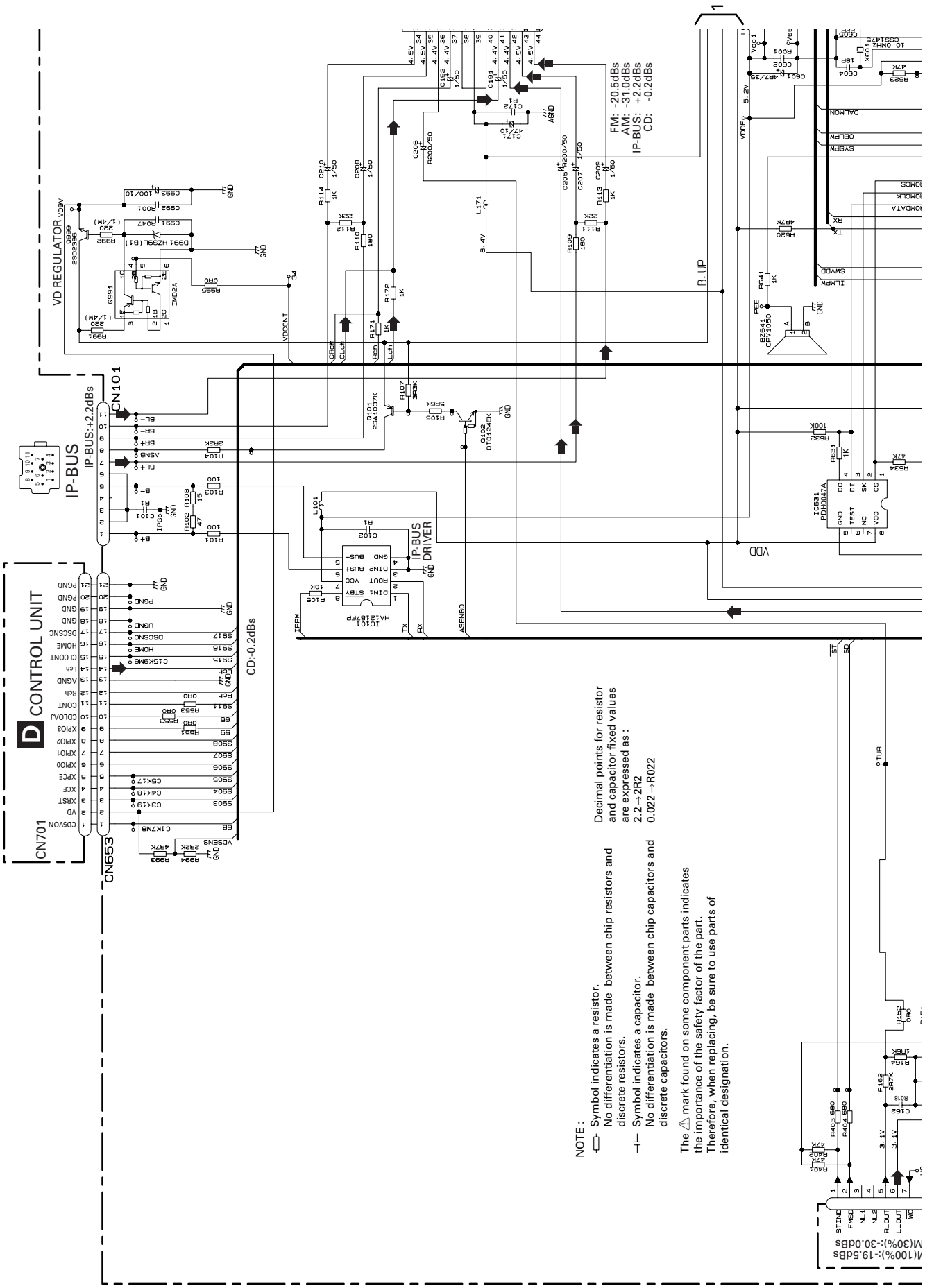
VD REGULATOR
IP-BUS
IP-BUS:+2.2dBs
CN101
CONTROL UNIT
CN701
CN653
CD:-0.2dBs
IP-BUS DRIVER
FM: -20.5dBs
AM: -31.0dBs
IP-BUS: +2.2dBs
CD: -0.2dBs
B. UP
VDD
Decimal points for resistor and capacitor fixed values are expressed as :
2.2→2R2
0.022→R022
NOTE :
Symbol indicates a resistor.
No differentiation is made between chip resistors and discrete resistors.
Symbol indicates a capacitor.
No differentiation is made between chip capacitors and discrete capacitors.
The ⚠ mark found on some component parts indicates the importance of the safety factor of the part.
Therefore, when replacing, be sure to use parts of identical designation.

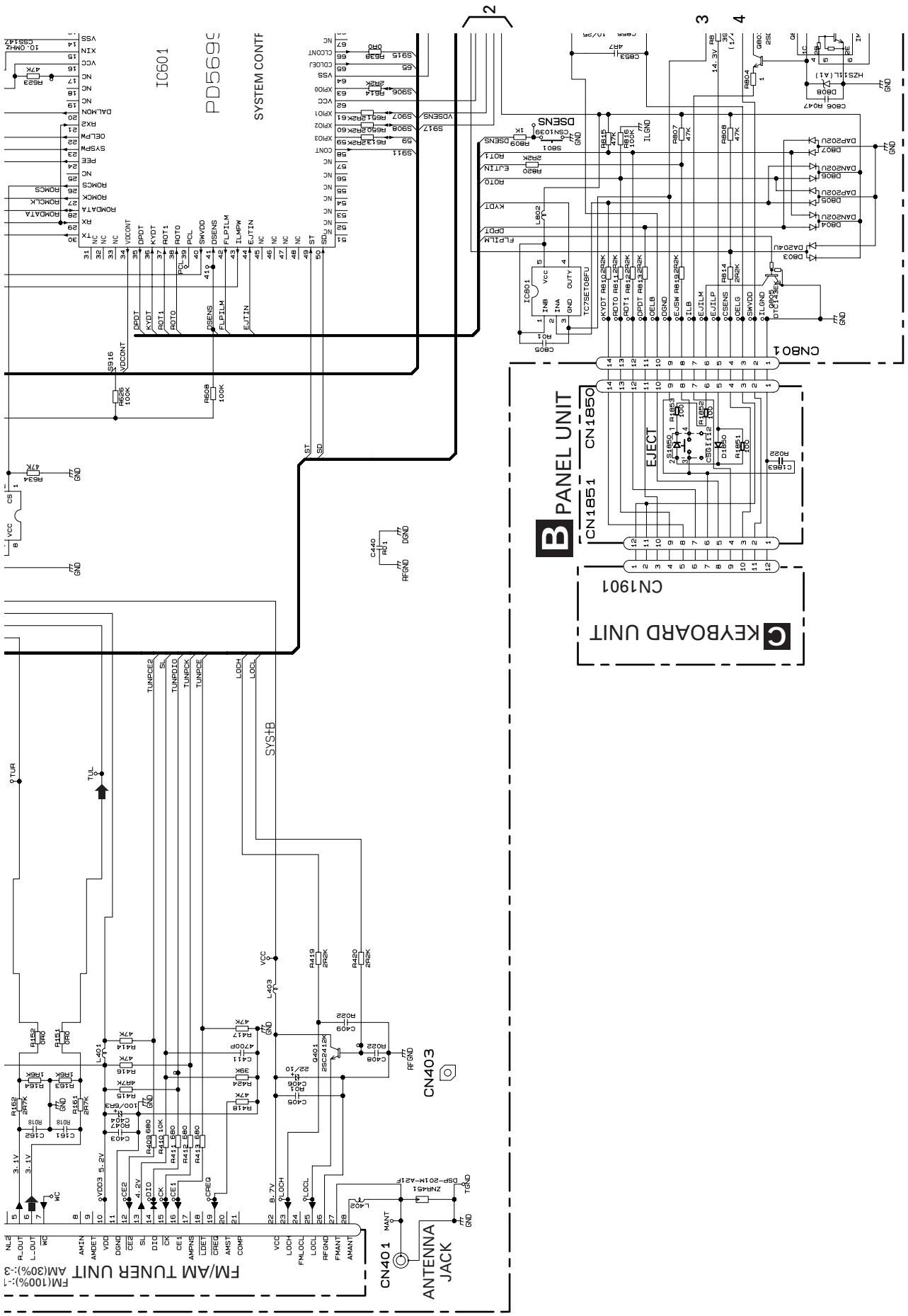
IC601
PD5690
SYSTEM CONTF
DSENS
CN801
TC75S10BFU
B PANEL UNIT
CN1850
CN1851
EJECT
C KEYBOARD UNIT
CN1901
SYSTB
CN403
CN401
ANTENNA JACK
FM/AM TUNER UNIT
FM(100%):-1
AM(30%):-3

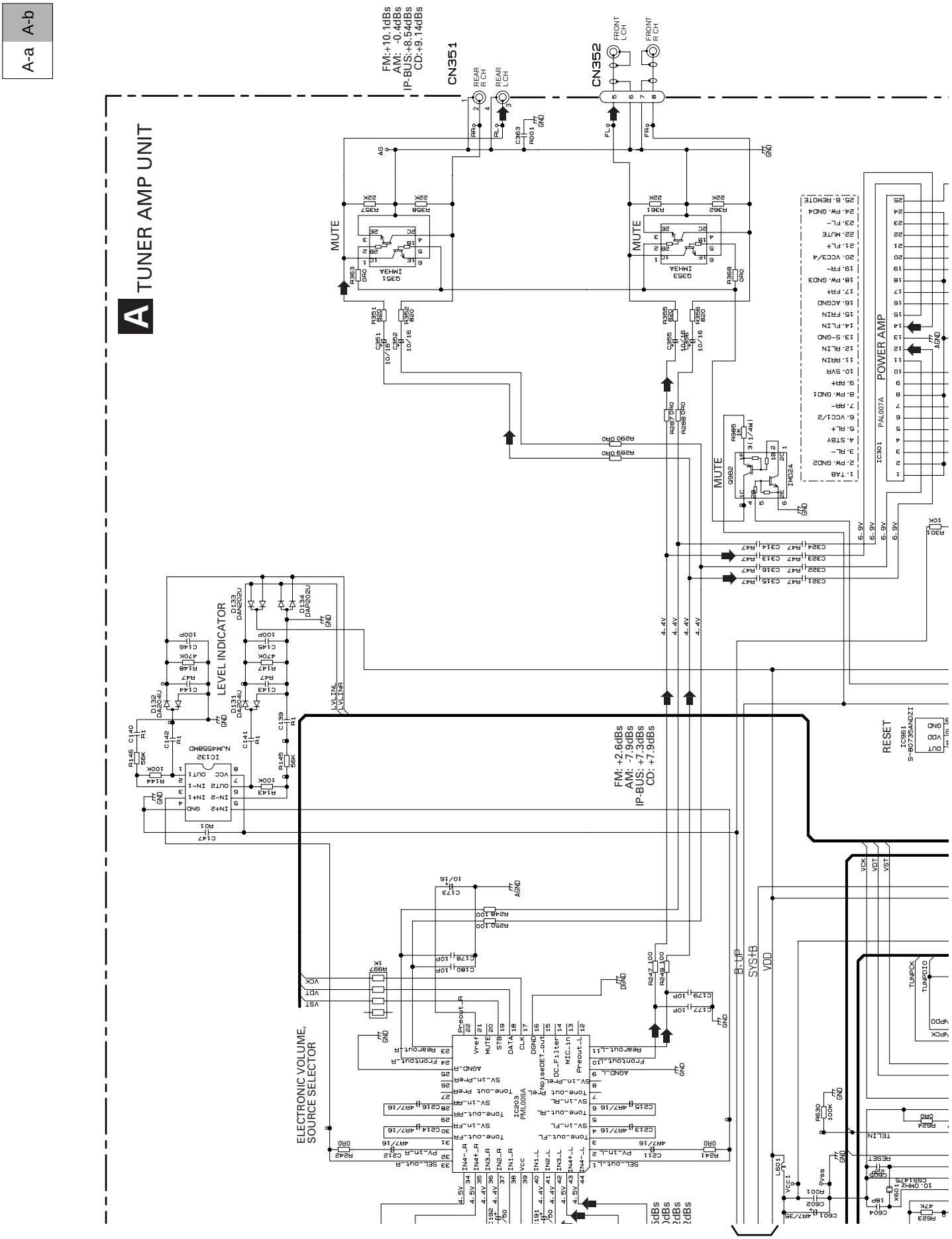
A-a A-b
A TUNER AMP UNIT
CN351
CN352
FM:+10.1dBs
AM: 0.4dBs
IP-BUS:+8.54dBs
CD:+9.14dBs
REAR R CH
REAR L CH
FRONT L CH
FRONT R CH
MUTE
POWER AMP
LEVEL INDICATOR
RESET
FM: +2.6dBs
AM: -7.9dBs
IP-BUS: +7.3dBs
CD: +7.9dBs
ELECTRONIC VOLUME, SOURCE SELECTOR
B-UP
SYS+B
VDD

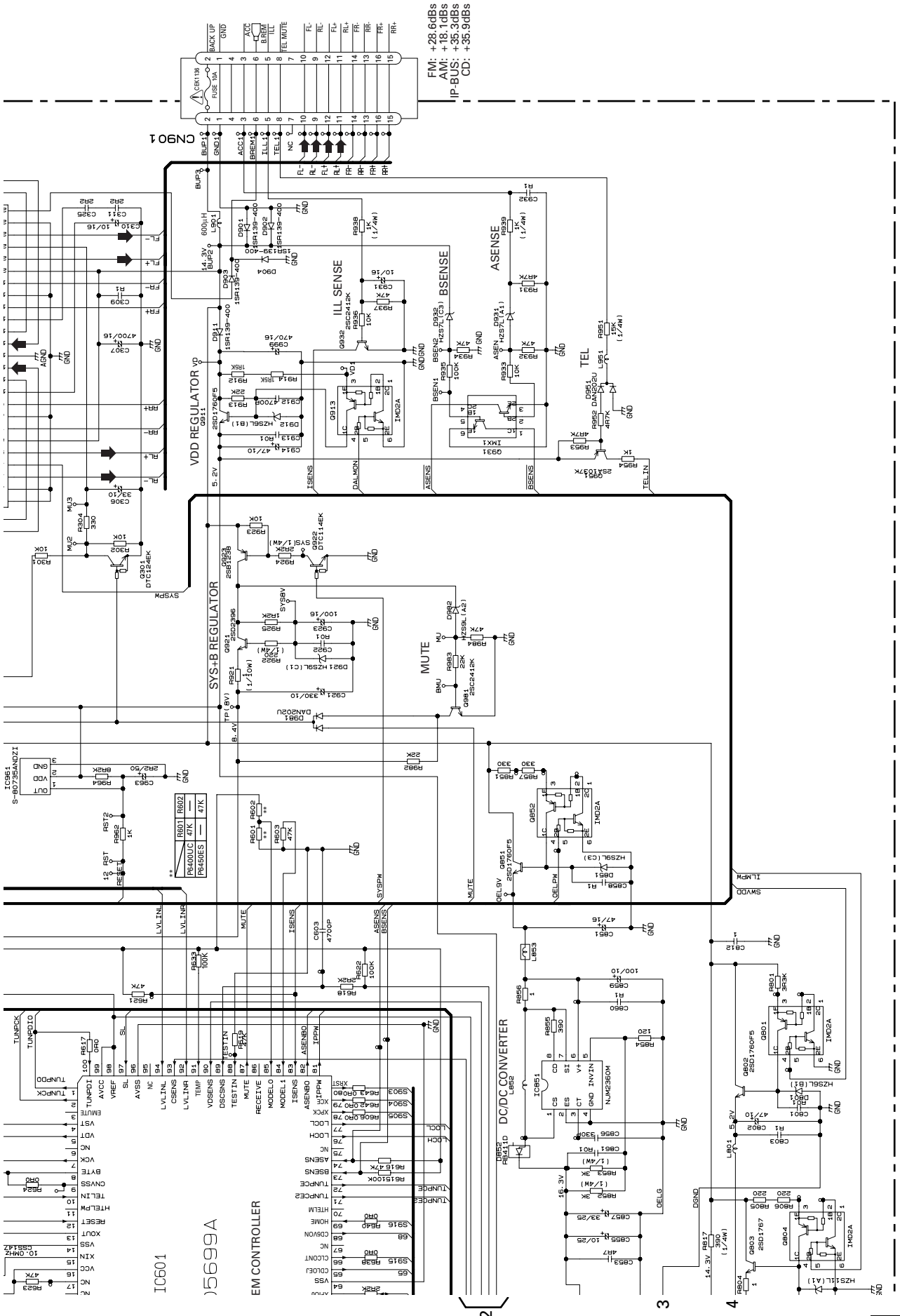
FM: +28.6dBs
AM: + 18.1dBs
IP-BUS: +35.3dBs
CD: +35.9dBs
CN901
VDD REGULATOR
SYS+B REGULATOR
ILL SENSE
BSENSE
ASENSE
TEL
MUTE
DC/DC CONVERTER
EM CONTROLLER
IC601
P6400UC
P6450ES

3.4 KEYBOARD UNIT

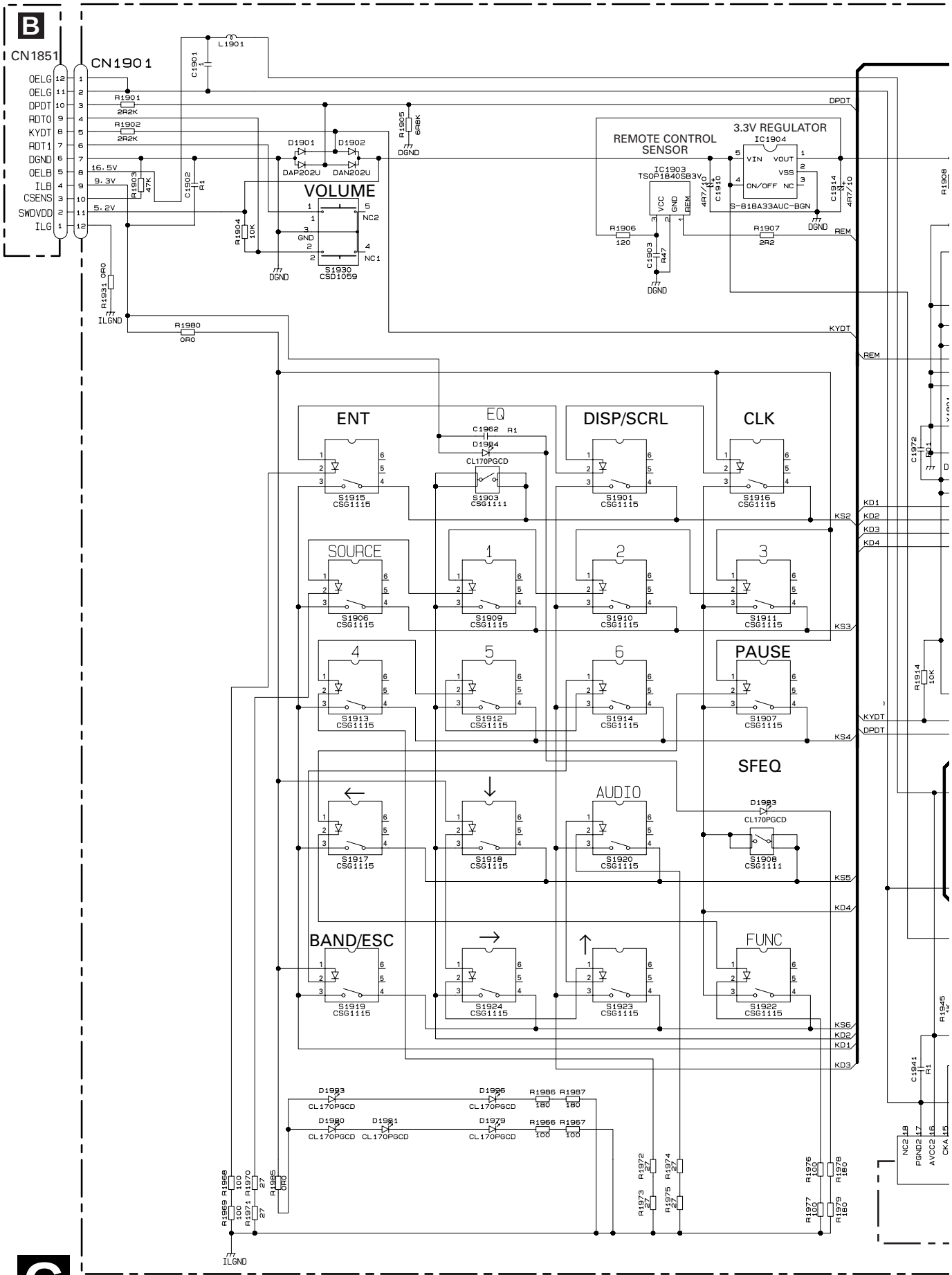

C

C KEYBOARD UNIT

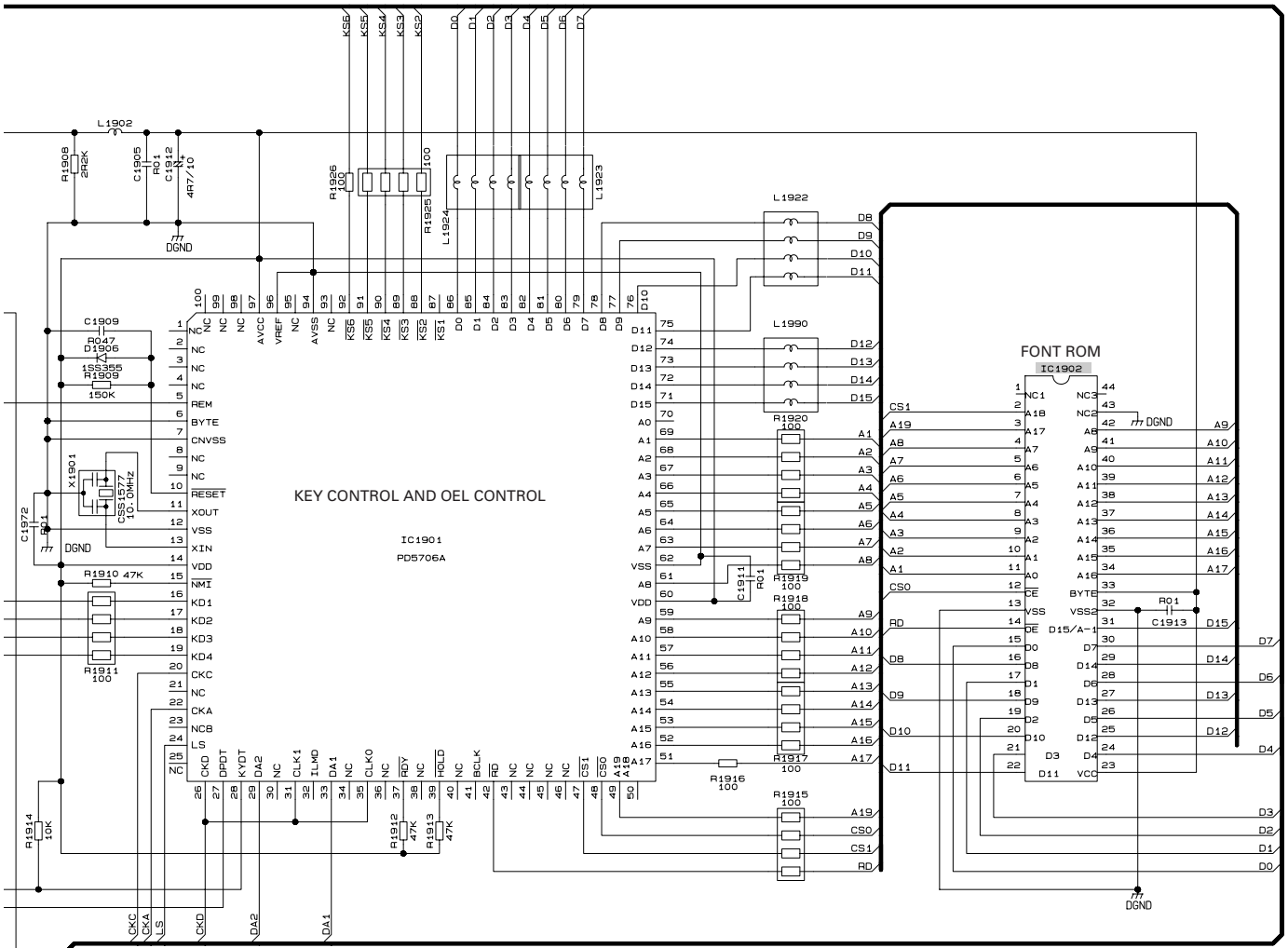

	DEH-P640/XN/UC	DEH-P6400/XN/UC	DEH-P6450/XN/ES
IC1902	PD8089A	PD8088A	PD8088A

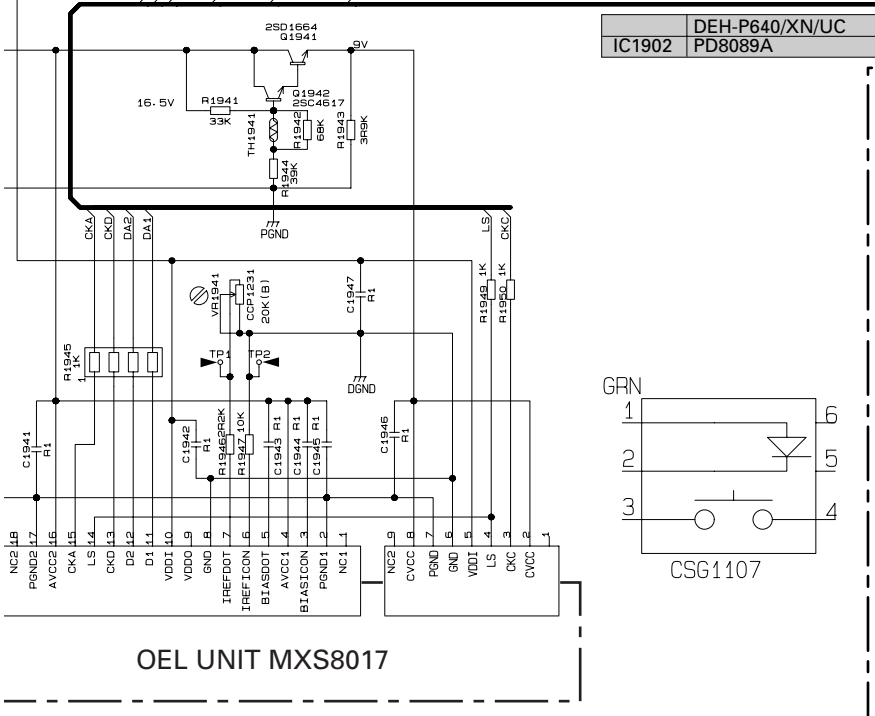

3.5 CD MECHANISM MODULE

D CONTROL UNIT

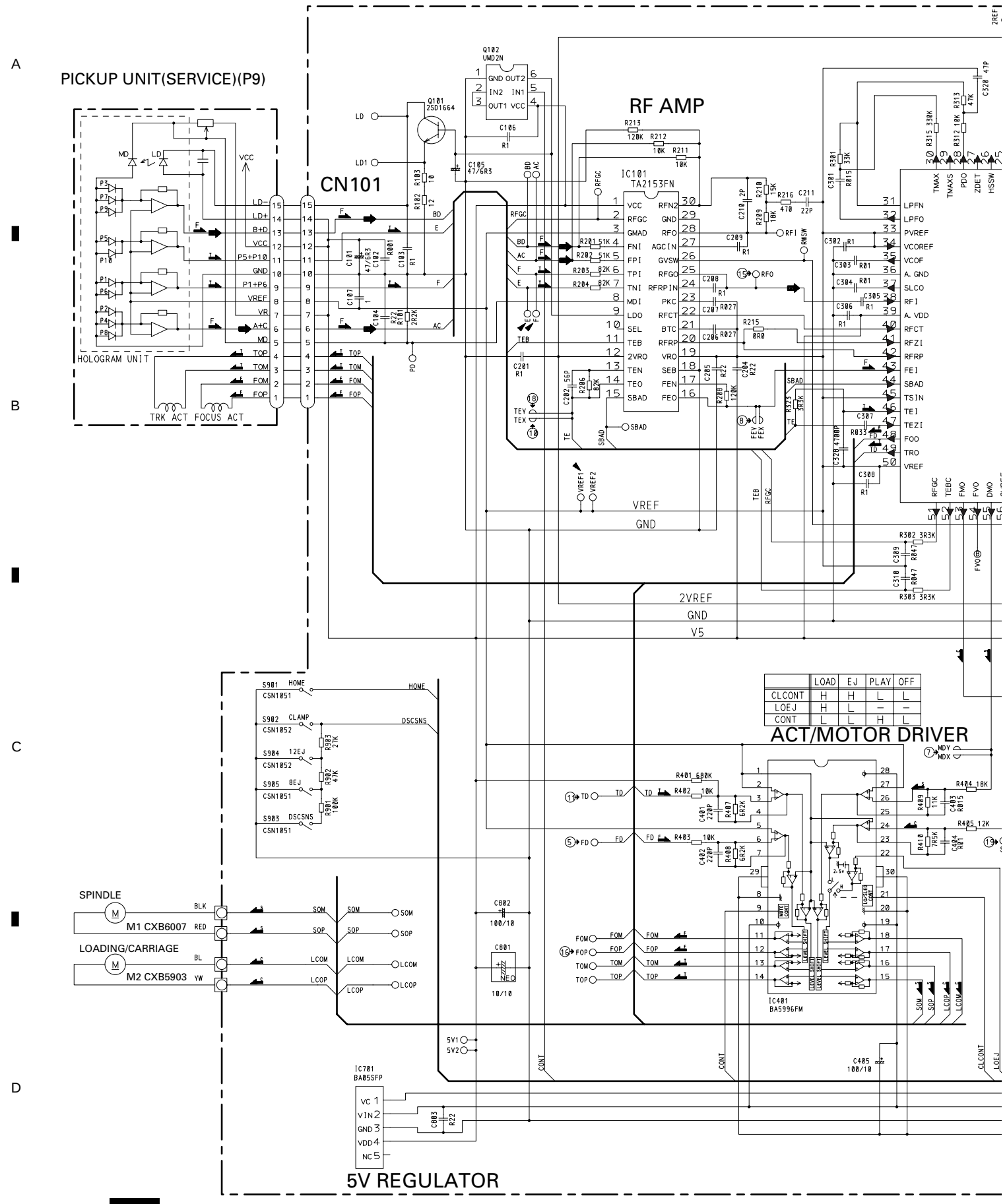

	LOAD	EJ	PLAY	OFF
CLCONT	H	H	L	L
LOEJ	H	L	–	–
CONT	L	L	H	L

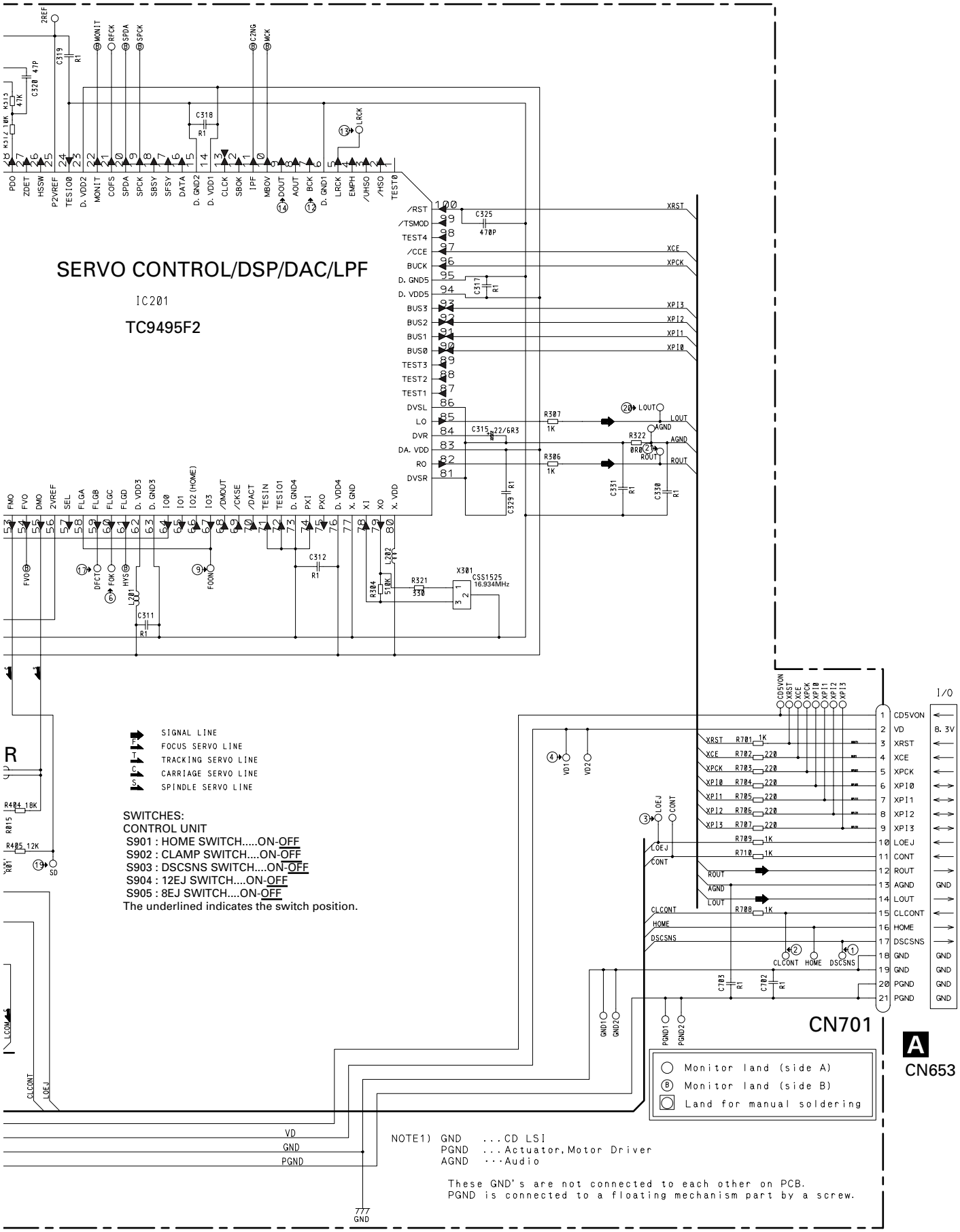
SERVO CONTROL/DSP/DAC/LPF
IC201
TC9495F2
SIGNAL LINE
FOCUS SERVO LINE
TRACKING SERVO LINE
CARRIAGE SERVO LINE
SPINDLE SERVO LINE
SWITCHES:
CONTROL UNIT
S901 : HOME SWITCH.....ON-OFF
S902 : CLAMP SWITCH....ON-OFF
S903 : DSCSNS SWITCH....ON-OFF
S904 : 12EJ SWITCH....ON-OFF
S905 : 8EJ SWITCH....ON-OFF
The underlined indicates the switch position.
CN701
CN653
Monitor land (side A)
Monitor land (side B)
Land for manual soldering
NOTE1) GND ...CD LSI
PGND ...Actuator, Motor Driver
AGND ...Audio
These GND's are not connected to each other on PCB.
PGND is connected to a floating mechanism part by a screw.

Note:1. The encircled numbers denote measuring pointes in the circuit diagram.
2. Reference voltage
VREF:2.1V

● Waveforms

① CH1:DSCSNS 5V/div.
② CH2:CLCONT 5V/div.
③ CH3:LOEJ 5V/div.
④ CH4:VD 10V/div.
500ms/div.
When loading (12 cm CD)

Ref. : GND
Mode : Normal

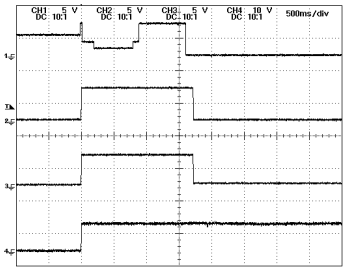

① CH1:DSCSNS 5V/div.
② CH2:CLCONT 5V/div.
③ CH3:LOEJ 5V/div.
④ CH4:VD 10V/div.
500ms/div.
When loading (8 cm CD)

Ref. : GND
Mode : Normal

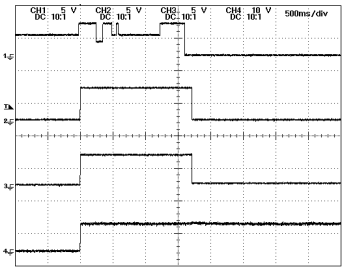

⑤ CH1:FD 500mV/div.
⑥ CH2:FOK 5V/div.
⑦ CH3:MD 5V/div.
500ms/div.
When setting up "Source On"

Ref. : VREF
Mode : Normal

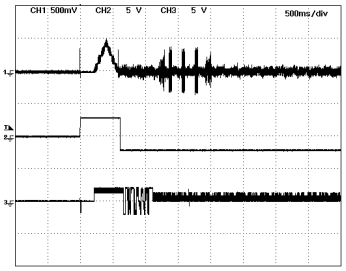

⑤ CH1:FD 500mV/div.
⑥ CH2:FOK 5V/div.
⑦ CH3:MD 5V/div.
100ms/div.
Magnified drawing for "time"

Ref. : VREF
Mode : Normal

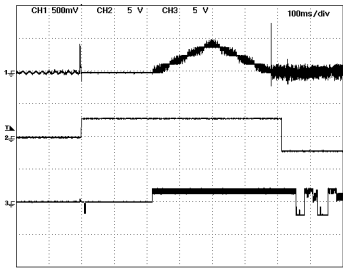

⑧ CH1:FE 500mV/div.
⑨ CH2:FOON 5V/div.
500ms/div.
When setting up "Source On"

Ref. : VREF
Mode : Normal

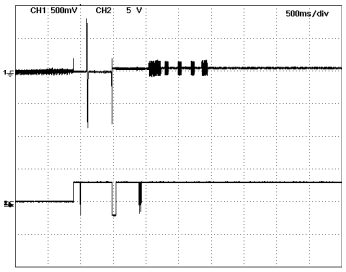

⑩ CH1:TE 500mV/div.
⑧ CH2:FE 500mV/div.
200ms/div.
When setting up "Source On"

Ref. : VREF
Mode : Normal

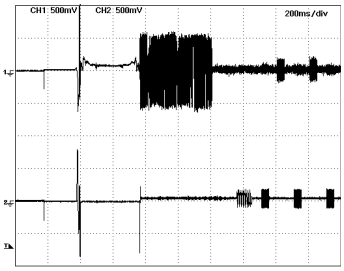

⑧ CH1:FE 500mV/div.
⑤ CH2:FD 500mV/div.
⑩ CH3:TE 500mV/div.
⑪ CH4:TD 500mV/div.
1ms/div.
During "Play"

Ref. : VREF
Mode : Normal

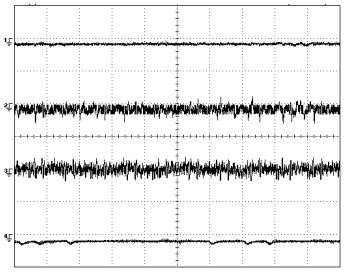

⑫ CH1:BCK 2V/div. 1μs/div.
During "Play"

Ref. : VREF
Mode : Normal

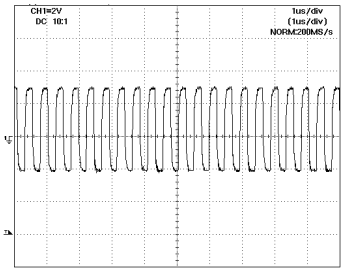

⑬ CH1:LRCK 2V/div.
⑭ CH2:DOUT 2V/div.
10μs/div.
During "Play"

Ref. : VREF
Mode : Normal

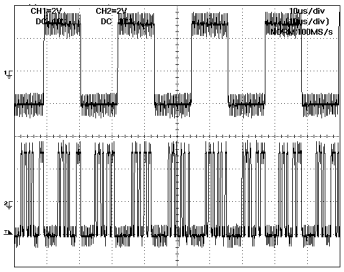

⑦ CH1:MD 500mV/div. 10μs/div.
During "Play"

Ref. : VREF
Mode : Normal

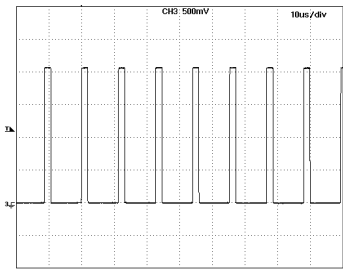

⑮ CH1:RFO 500mV/div. 0.5μs/div.
During "Play"

Ref. : VREF
Mode : Normal

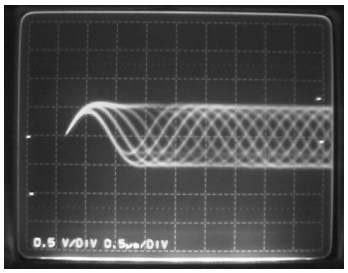

⑮ CH1:RFO 500mV/div.
⑩ CH2:TE 500mV/div.
2ms/div.
During "Tracking Open"

Ref. : VREF
Mode : Test

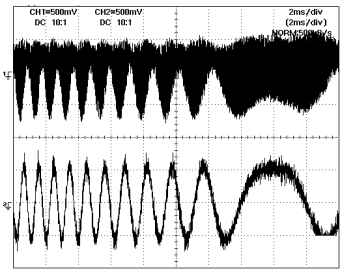

⑤ CH1:FD 1V/div.
⑯ CH2:FOP 2V/div.
200ms/div.

With no disk inserted
During "Focus Close"

Ref. : VREF
Mode : Test

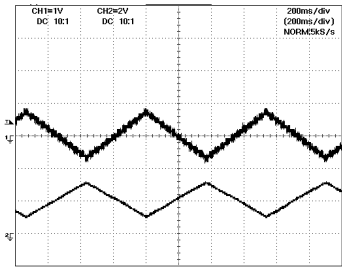

⑮ CH1:RFO 1V/div.
⑩ CH2:TE 500mV/div.
⑪ CH3:TD 1V/div.
500µs/div.

1 Track Jump

Ref. : VREF
Mode : Test

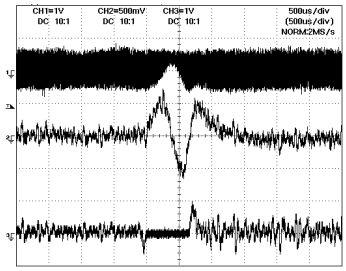

⑮ CH1:RFO 1V/div.
⑩ CH2:TE 1V/div.
⑪ CH3:TD 1V/div.
5ms/div.

32 Track Jump

Ref. : VREF
Mode : Test

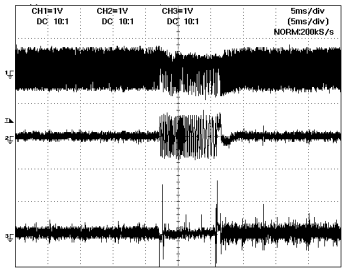

⑮ CH1:RFO 1V/div.
⑩ CH2:TE 1V/div.
⑪ CH3:TD 1V/div.
5ms/div.

100 Track Jump

Ref. : VREF
Mode : Test

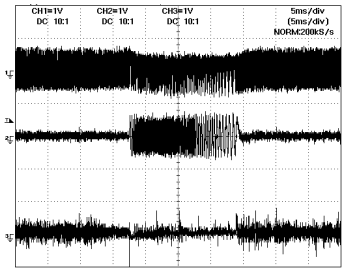

⑮ CH1:RFO 2V/div.
⑰ CH2:DFCT 5V/div.
⑤ CH3:FD 1V/div.
⑪ CH4:TD 2V/div.
500µs/div.

When reproducing black dots (800µm)

Ref. : VREF
Mode : Normal

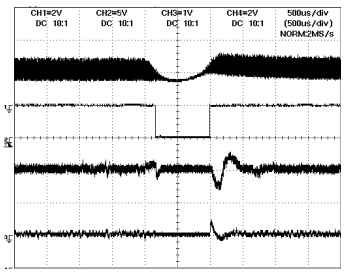

⑮ CH1:RFO 1V/div.
⑩ CH2:TE 500mV/div.
⑰ CH3:DFCT 5V/div.
200ms/div.

During inside/outside search

Ref. : VREF
Mode : Normal

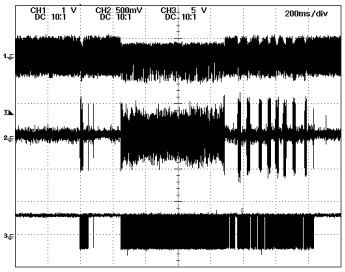

⑱ CH1:TEY 500mV/div.
⑲ CH2:SD 2V/div.
200ms/div.

During inside/outside search

Ref. : VREF
Mode : Normal

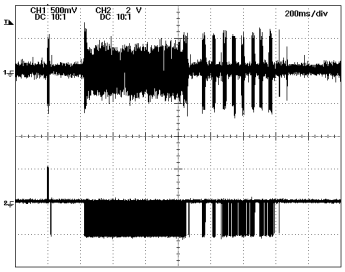

① CH1:DSCSNS 5V/div.
② CH2:CLCONT 5V/div.
③ CH3:LOEJ 5V/div.
200ms/div.

When "Eject" (12 cm CD)

Ref. : GND
Mode : Normal

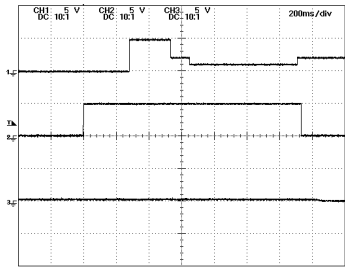

① CH1:DSCSNS 5V/div.
② CH2:CLCONT 5V/div.
③ CH3:LOEJ 5V/div.
200ms/div.

When "Eject" (8cm CD)

Ref. : GND
Mode : Normal

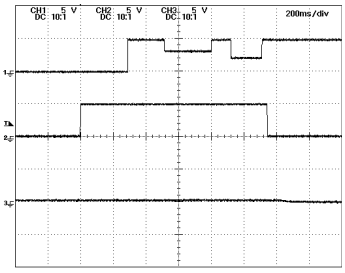

⑳ CH1:LOUT 2V/div.
㉑ CH2:ROUT 2V/div.
200µs/div.

"Play" in 1kHz, 0dB

Ref. : GND
Mode : Normal

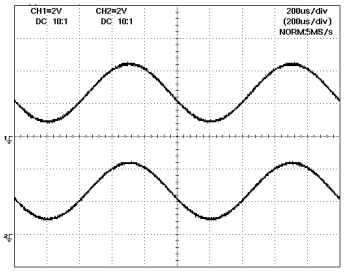

4. PCB CONNECTION DIAGRAM

4.1 TUNER AMP UNIT

A TUNER AMP UNIT

NOTE FOR PCB DIAGRAMS

1. The parts mounted on this PCB include all necessary parts for several destination.
   For further information for respective destinations, be sure to check with the schematic diagram.
2. Viewpoint of PCB diagrams

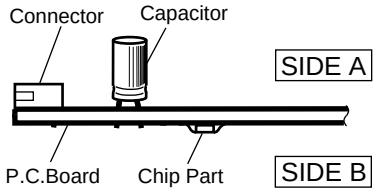

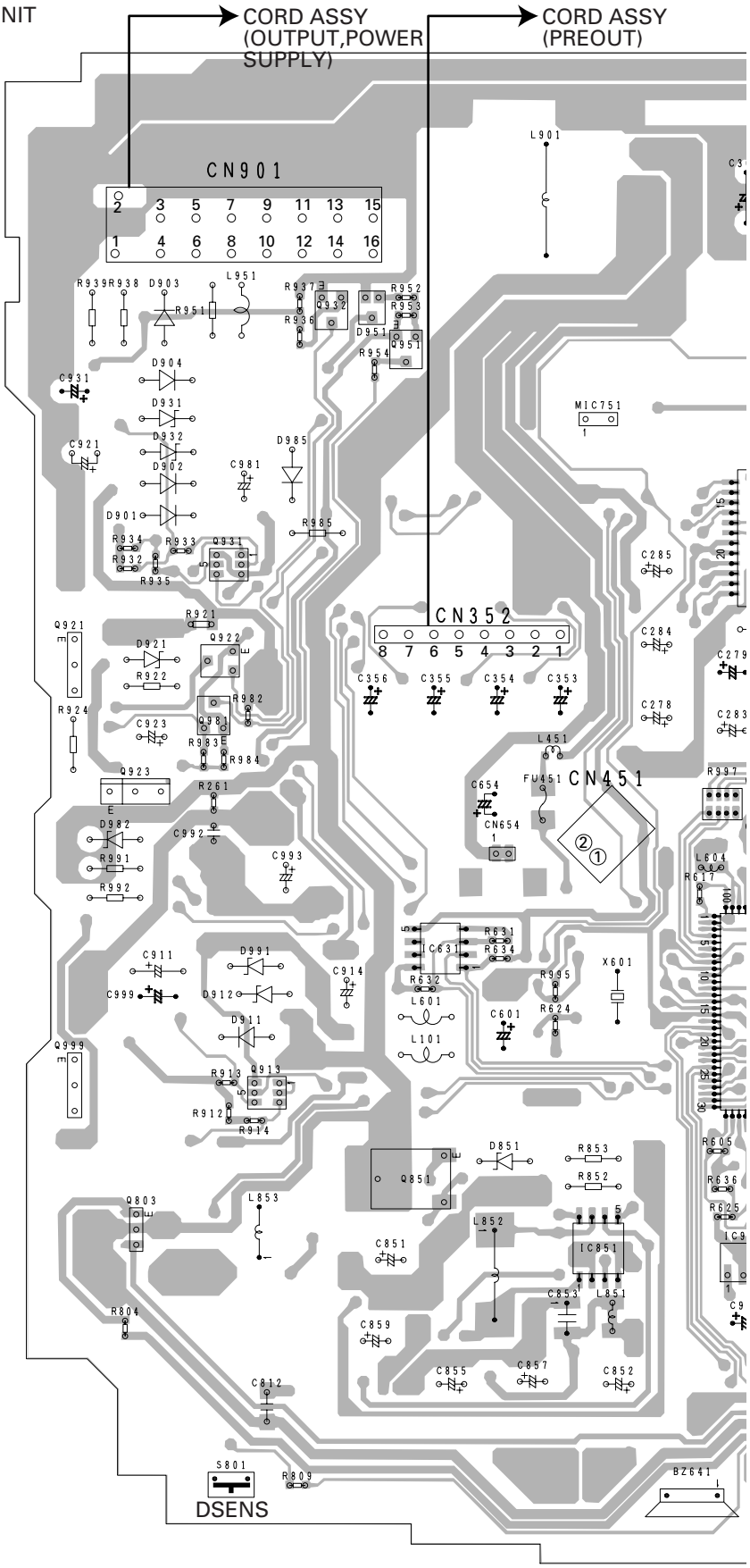

SIDE A

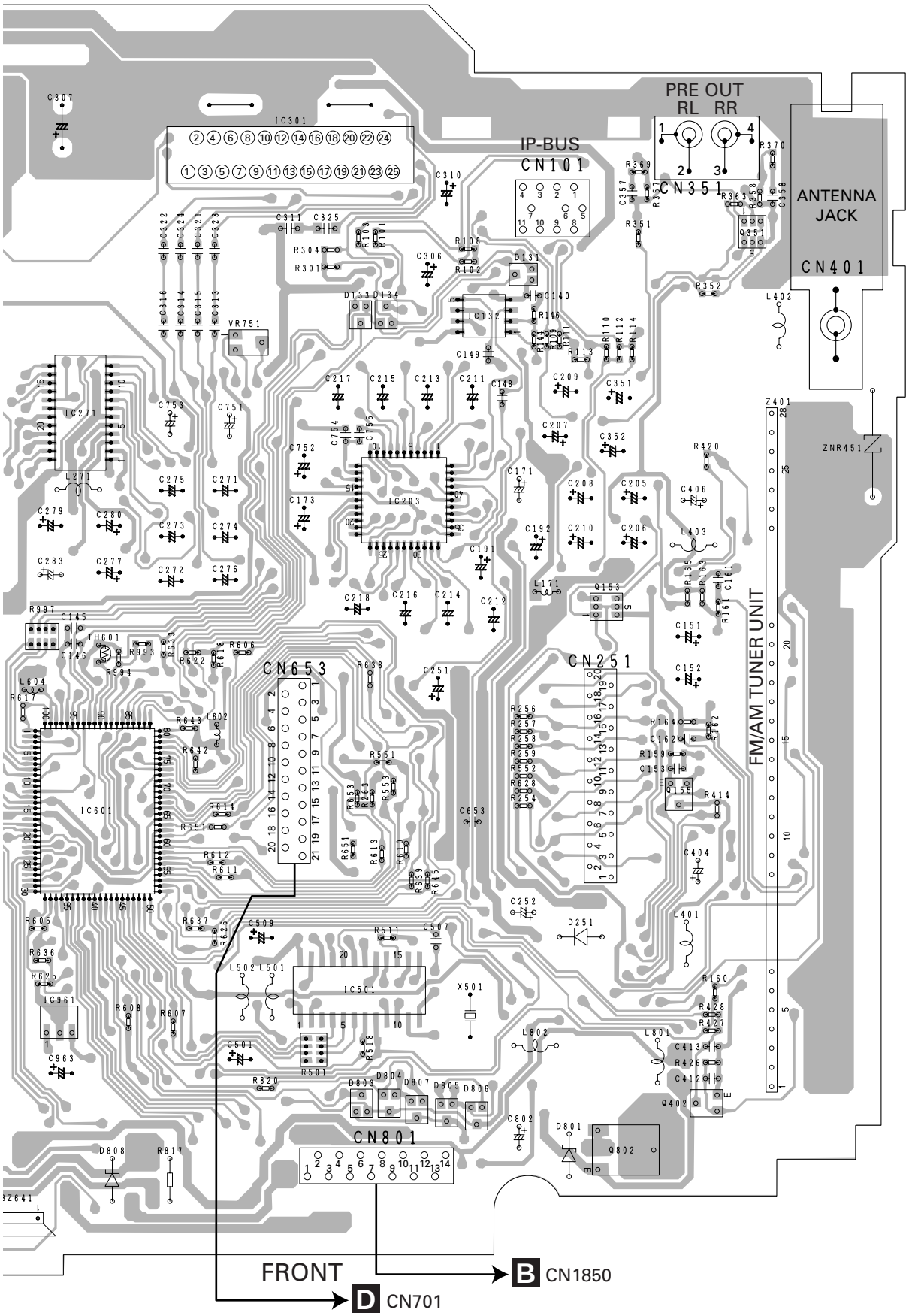

IC,Q

IC301

Q932
Q351
Q951

IC132
VR751

IC271 Q931

Q921
Q922 IC203

Q981
Q153
Q923

IC631
Q155
IC601
Q999
Q913

Q851
Q803
IC501 IC961
IC851

Q402

Q802

A TUNER AMP UNIT

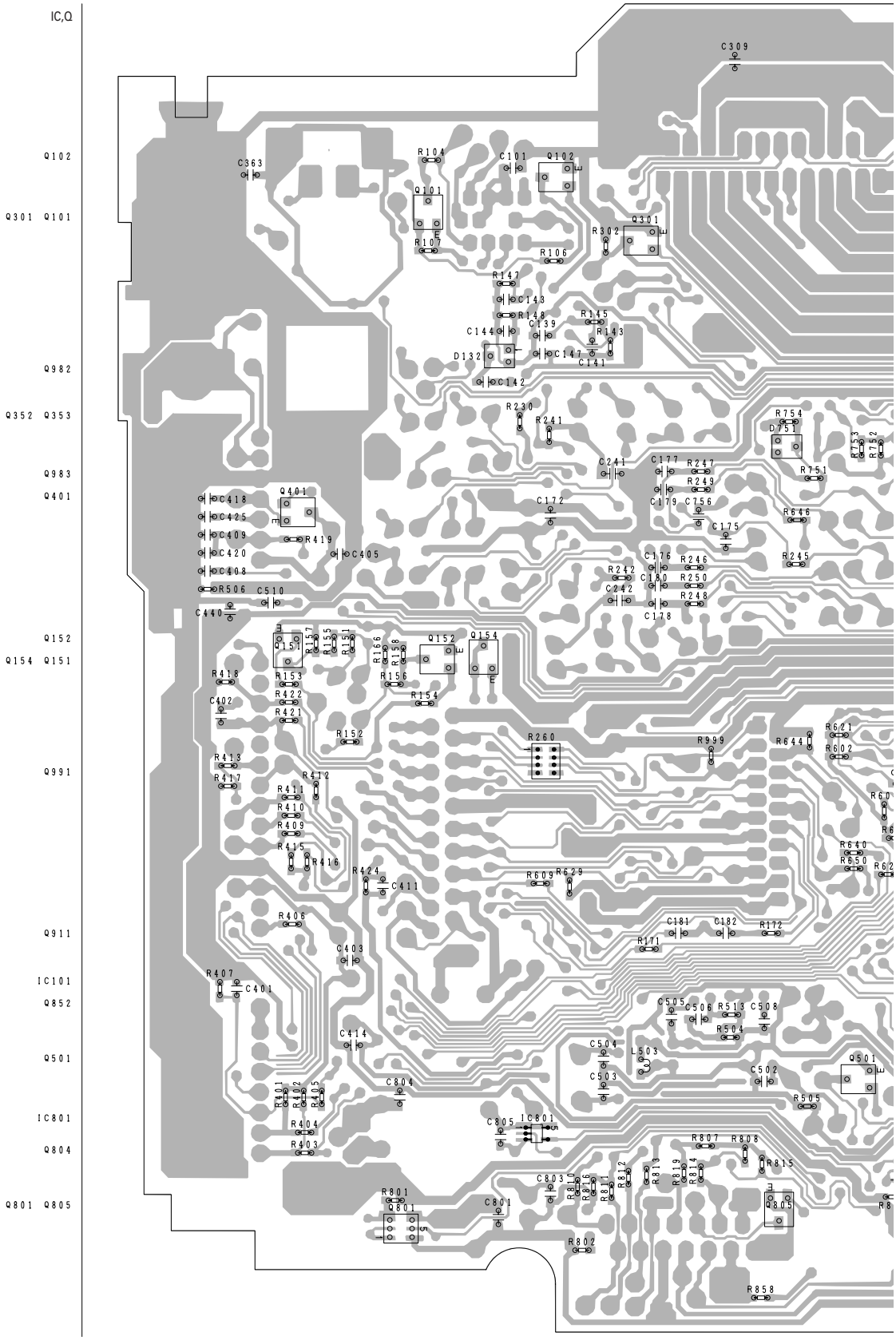

SIDE B

A

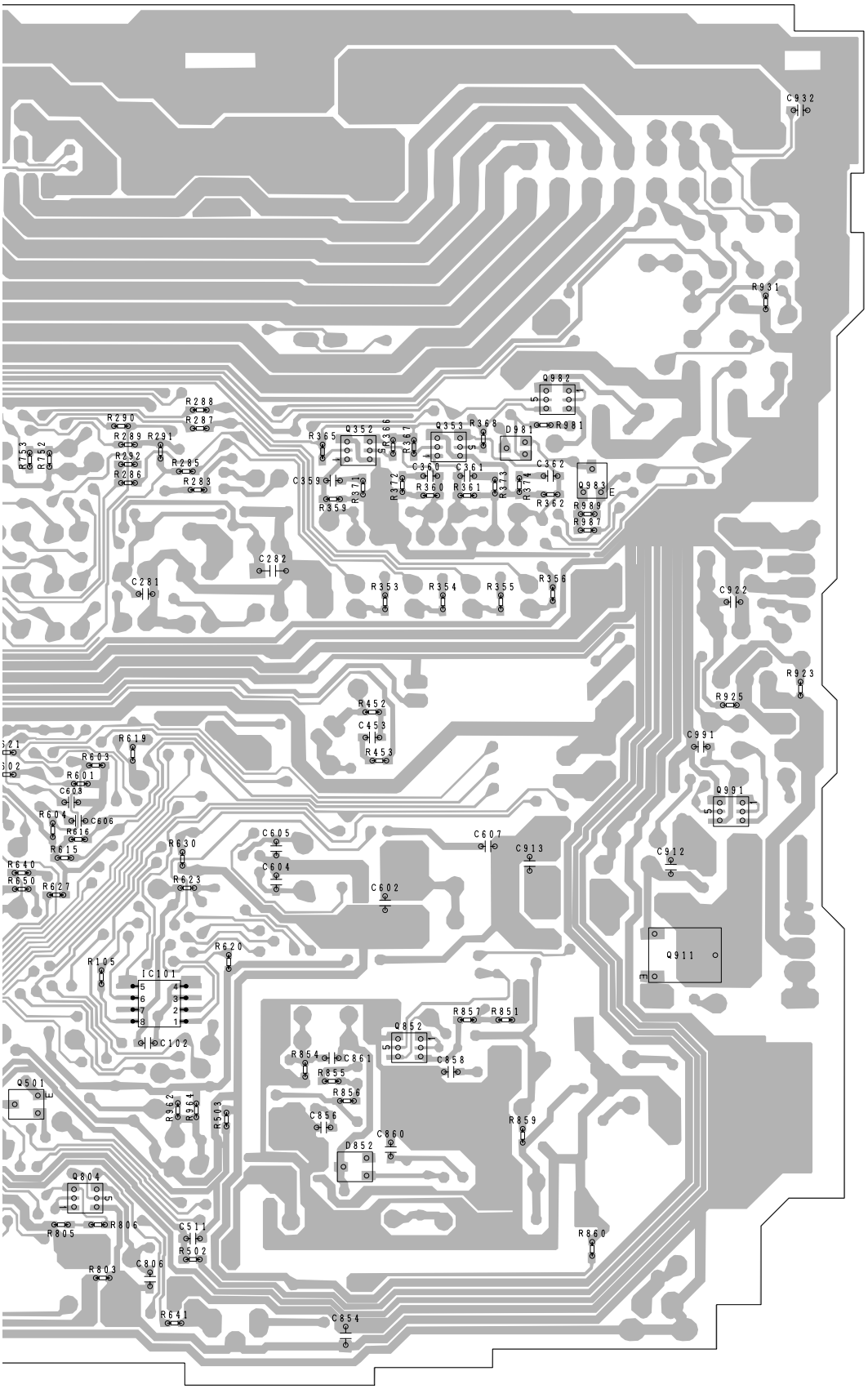
C932
R931
Q982
R981
R288
R287
R290
R289
R291
R292
R286
R285
R283
R753
R752
R365
Q352
R366
R367
Q353
R368
D981
C359
R371
R359
R377
R360
C360
C361
R361
R373
R374
R362
C362
Q983
R989
R987
C282
C281
R353
R354
R355
R356
C922
R923
R925
R452
C453
R453
R619
R603
R601
C603
R604
C606
R616
R615
R640
R650
R627
R630
R623
C605
C604
C607
C913
C912
C991
Q991
C602
Q911
R620
R105
IC101
C102
R857
R851
Q852
R854
C861
R855
R856
C858
Q501
R962
R964
R503
C856
R859
C860
D852
Q804
R805
R806
C511
R502
R860
R803
C806
R641
C854

B

C

D

4.2 PANEL UNIT

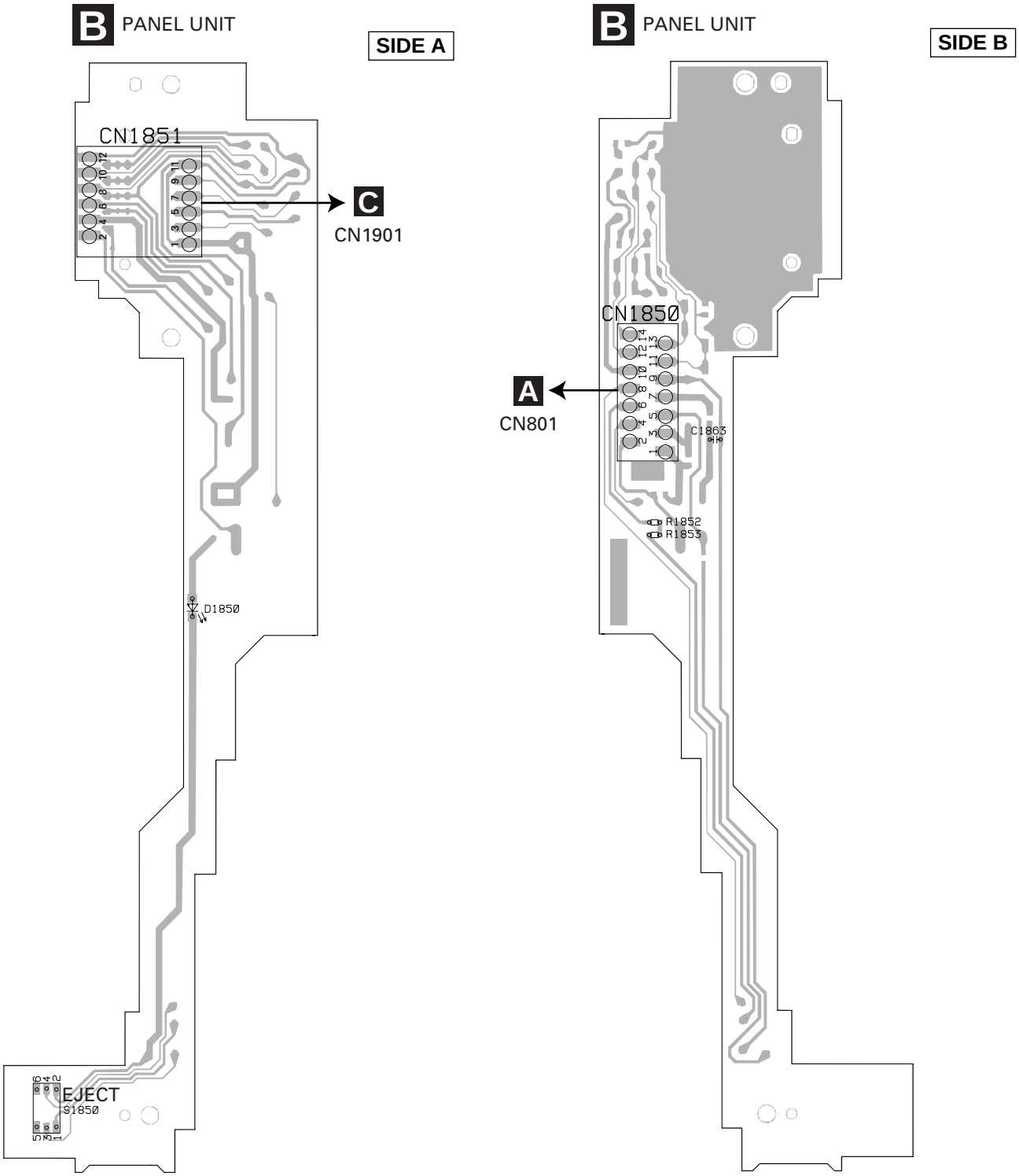

4.3 KEYBOARD UNIT

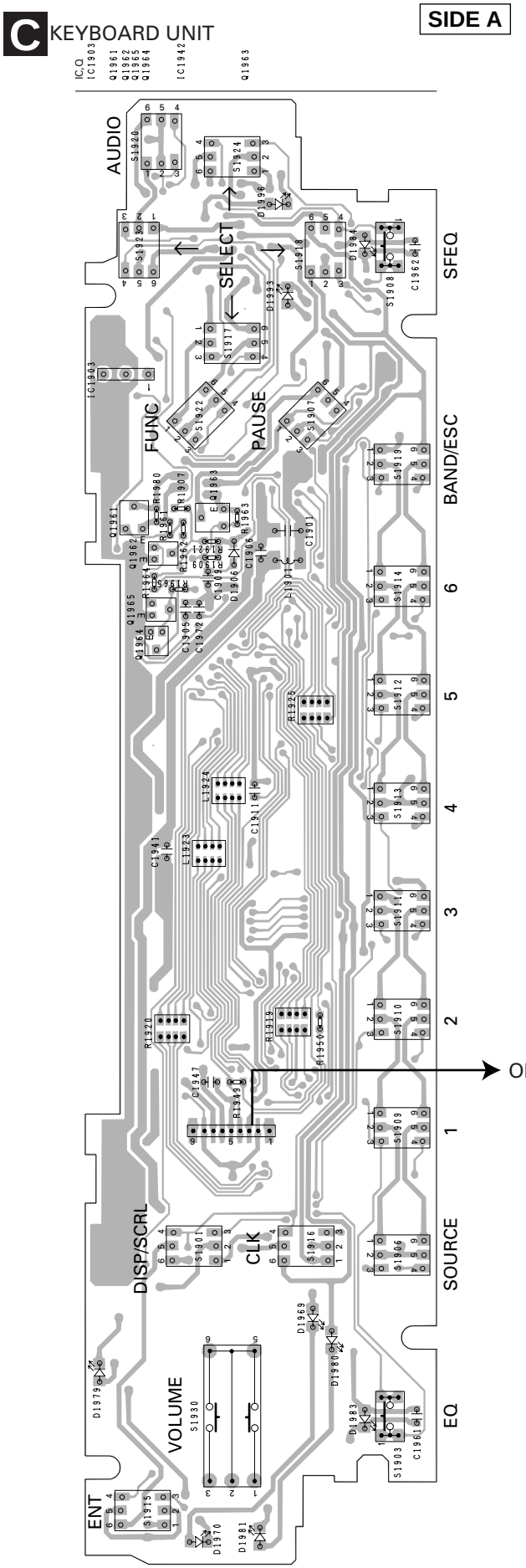

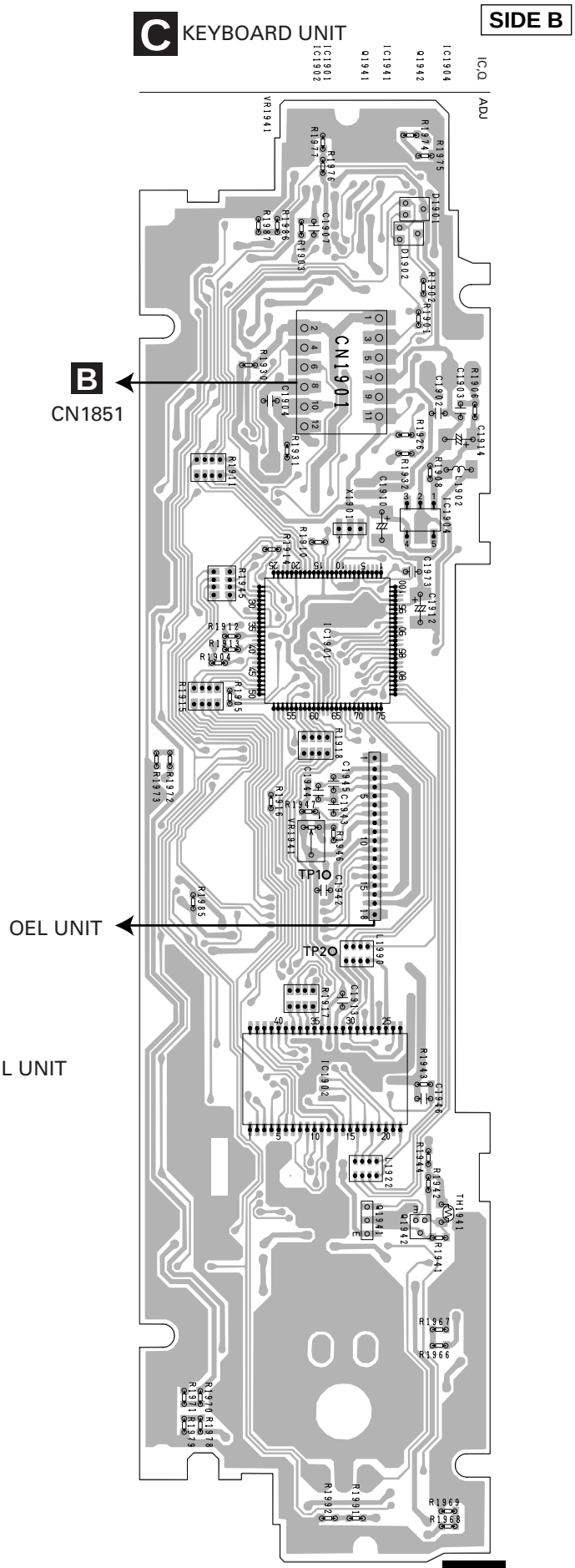

4.4 CD MECHANISM MODULE

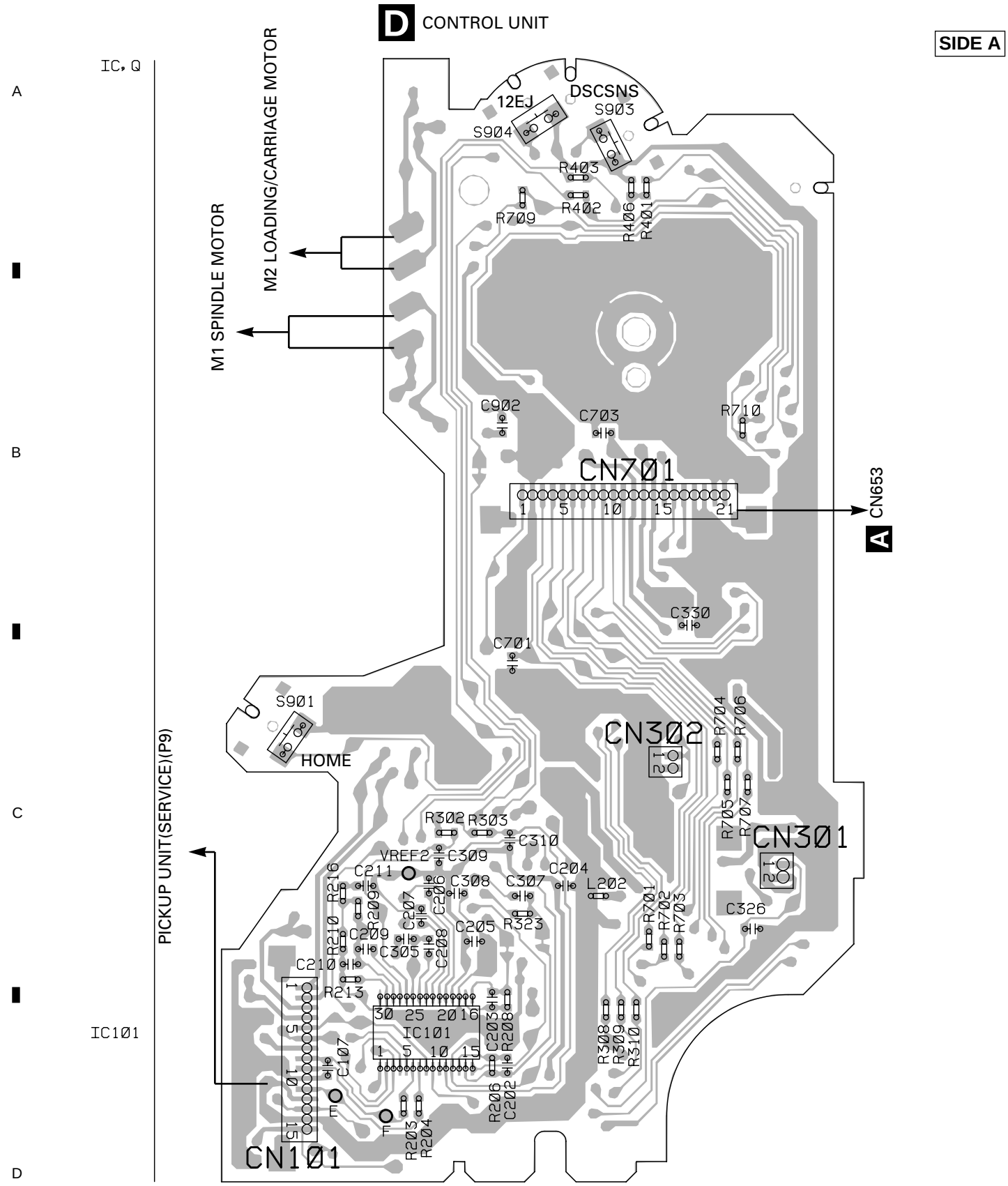

D CONTROL UNIT

SIDE B

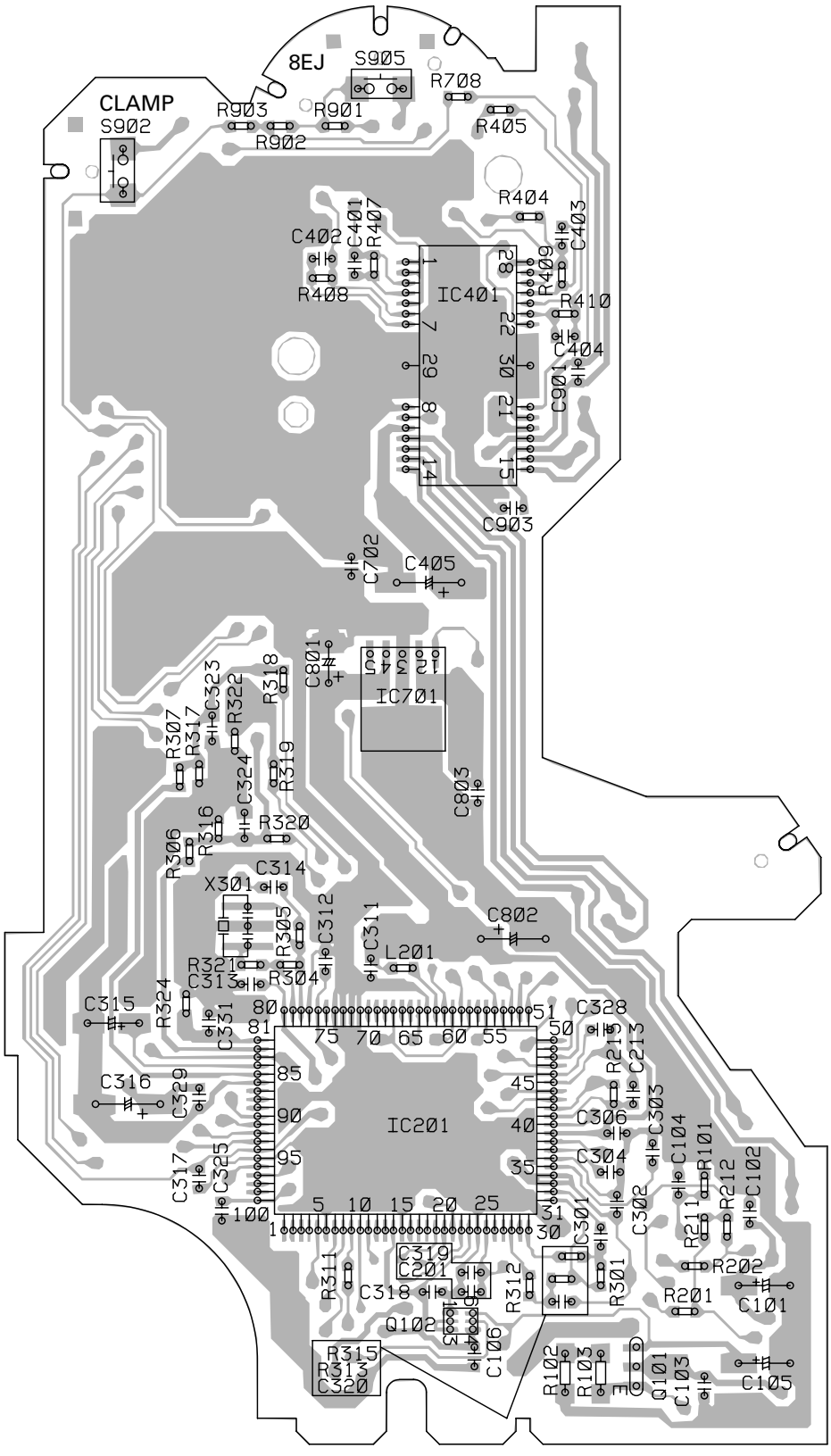

IC, Q

IC401

IC701

IC201

Q102

Q101

5. ELECTRICAL PARTS LIST

NOTES:

- Parts whose parts numbers are omitted are subject to being not supplied.
- The part numbers shown below indicate chip components.

Chip Resistor

RS1/○S○○○J,RS1/○○S○○○J

Chip Capacitor (except for CQS.....)

CKS....., CCS....., CSZS.....

A Unit Number : CWM8149(DEH-P640/XN/UC)
Unit Name : Tuner Amp Unit

MISCELLANEOUS

=====Circuit Symbol and No.===Part Name			Part No.
IC	101	IC	HA12187FP
IC	132	IC	NJM4558MD
IC	203	IC	PML009A
IC	301	IC	PAL007A
IC	601	IC	PD5699A
IC	801	IC	TC7SET08FU
IC	851	IC	NJM2360M
IC	961	IC	S-80735ANDZI
Q	101	Transistor	2SA1037K
Q	102	Transistor	DTC124EK
Q	301	Transistor	DTC124EK
Q	351	Transistor	IMH3A
Q	353	Transistor	IMH3A
Q	401	Transistor	2SC2412K
Q	801	Transistor	IMD2A
Q	802	Transistor	2SD1760F5
Q	803	Transistor	2SD1767
Q	804	Transistor	IMD2A
Q	805	Transistor	DTC143EK
Q	851	Transistor	2SD1760F5
Q	852	Transistor	IMD2A
Q	911	Transistor	2SD1760F5
Q	913	Transistor	IMD2A
Q	921	Transistor	2SD2396
Q	922	Transistor	DTC114EK
Q	923	Transistor	2SB1238
Q	931	Transistor	IMX1
Q	932	Transistor	2SC2412K
Q	951	Transistor	2SA1037K
Q	981	Transistor	2SC2412K
Q	982	Transistor	IMD2A
Q	991	Transistor	IMD2A
Q	999	Transistor	2SD2396
D	131	Diode Network	DA204U
D	132	Diode Network	DA204U
D	133	Diode	DAN202U
D	134	Diode	DAP202U
D	801	Diode	HZS6L(B1)
D	803	Diode Network	DA204U
D	804	Diode	DAN202U
D	805	Diode	DAP202U
D	806	Diode	DAN202U
D	807	Diode	DAP202U
D	808	Diode	HZS11L(A1)
D	851	Diode	HZS9L(C3)
D	852	Diode	RB411D
D	901	Diode	1SR139-400
D	902	Diode	1SR139-400
D	903	Diode	1SR139-400
D	904	Diode	1SR139-400
D	911	Diode	1SR139-400
D	912	Diode	HZS6L(B1)
D	921	Diode	HZS9L(C1)
D	931	Diode	HZS7L(A1)
D	932	Diode	HZS7L(C3)
D	951	Diode	DAN202U
D	981	Diode	DAN202U
D	982	Diode	HZS9L(A2)
D	991	Diode	HZS9L(B1)
ZNR	451	Surge Protector	DSP-201M-A21F
L	171	Inductor	CTF1530
L	401	Ferri-Inductor	LAU2R2K
L	402	Ferri-Inductor	LAU4R7K
L	403	Inductor	LAU1R0K
L	601	Ferri-Inductor	LAU2R2K
L	801	Inductor	LAU100K
L	802	Ferri-Inductor	LAU2R2K
L	852	Inductor	CTF1510
L	853	Inductor	CTF1489
L	901	Choke Coil 600μH	CTH1221
L	951	Ferri-Inductor	LAU2R2K
X	601	Radiator 10.00MHz	CSS1475
S	801	Switch(DSENS)	CSN1039
		FM/AM Tuner Unit	CWE1563
BZ	641	Buzzer	CPV1050

RESISTORS

R	101		RS1/16S101J
R	102		RS1/16S470J
R	103		RS1/16S101J
R	104		RS1/16S222J
R	105		RS1/16S103J
R	106		RS1/16S562J
R	107		RS1/16S332J
R	108		RS1/16S150J
R	109		RS1/16S181J
R	110		RS1/16S181J
R	111		RS1/16S223J
R	112		RS1/16S223J
R	113		RS1/16S102J
R	114		RS1/16S102J
R	143		RS1/16S104J
R	144		RS1/16S104J
R	145		RS1/16S563J
R	146		RS1/16S563J
R	147		RS1/16S474J
R	148		RS1/16S474J
R	151		RS1/16S0R0J
R	152		RS1/16S0R0J
R	161		RS1/16S272J
R	162		RS1/16S272J
R	163		RS1/16S162J

=====Circuit Symbol and No.===Part Name		Part No.
R	164	RS1/16S162J
R	171	RS1/16S0R0J
R	172	RS1/16S0R0J
R	241	RS1/16S0R0J
R	242	RS1/16S0R0J
R	245	RS1/16S101J
R	246	RS1/16S101J
R	247	RS1/16S101J
R	248	RS1/16S101J
R	249	RS1/16S101J
R	250	RS1/16S101J
R	287	RS1/16S0R0J
R	288	RS1/16S0R0J
R	291	RS1/16S0R0J
R	292	RS1/16S0R0J
R	301	RS1/16S103J
R	302	RS1/16S103J
R	304	RS1/16S331J
R	351	RS1/16S821J
R	352	RS1/16S821J
R	355	RS1/16S821J
R	356	RS1/16S821J
R	357	RS1/16S223J
R	358	RS1/16S223J
R	361	RS1/16S223J
R	362	RS1/16S223J
R	363	RS1/16S0R0J
R	368	RS1/16S0R0J
R	401	RS1/16S473J
R	402	RS1/16S473J
R	403	RS1/16S681J
R	404	RS1/16S681J
R	409	RS1/16S681J
R	410	RS1/16S103J
R	411	RS1/16S681J
R	412	RS1/16S681J
R	413	RS1/16S681J
R	414	RS1/16S473J
R	415	RS1/16S472J
R	416	RS1/16S473J
R	417	RS1/16S473J
R	418	RS1/16S473J
R	419	RS1/16S222J
R	420	RS1/16S222J
R	424	RS1/16S393J
R	551	RS1/16S0R0J
R	553	RS1/16S0R0J
R	601	RS1/16S473J
R	604	RS1/16S473J
R	606	RS1/16S0R0J
R	608	RS1/16S104J
R	613	RS1/16S222J
R	614	RS1/16S222J
R	615	RS1/16S104J
R	616	RS1/16S473J
R	617	RS1/16S0R0J
R	618	RS1/16S222J
R	619	RS1/16S473J
R	620	RS1/16S472J
R	621	RS1/16S473J
R	622	RS1/16S104J
R	623	RS1/16S473J
R	624	RS1/16S0R0J
R	626	RS1/16S104J
R	630	RS1/16S104J

=====Circuit Symbol and No.===Part Name		Part No.
R	633	RS1/16S104J
R	638	RS1/16S0R0J
R	640	RS1/16S0R0J
R	641	RS1/16S102J
R	642	RS1/16S0R0J
R	643	RS1/16S0R0J
R	650	RS1/16S222J
R	651	RS1/16S222J
R	653	RS1/16S0R0J
R	801	RS1/16S332J
R	804	RS1/16S1R0J
R	805	RS1/16S221J
R	806	RS1/16S221J
R	807	RS1/16S473J
R	808	RS1/16S473J
R	809	RS1/16S102J
R	810	RS1/16S222J
R	811	RS1/16S222J
R	812	RS1/16S222J
R	813	RS1/16S222J
R	814	RS1/16S222J
R	815	RS1/16S473J
R	816	RS1/16S104J
R	817	RD1/4PU391J
R	819	RS1/16S222J
R	820	RS1/16S222J
R	851	RS1/16S331J
R	852	RD1/4PU302J
R	853	RD1/4PU302J
R	854	RS1/16S121J
R	855	RS1/16S391J
R	856	RS1/16S1R0J
R	857	RS1/16S331J
R	912	RS1/16S152J
R	913	RS1/16S223J
R	914	RS1/16S152J
R	921	RS1/10S1R0J
R	922	RD1/4PU221J
R	923	RS1/16S103J
R	924	RD1/4PU222J
R	925	RS1/16S122J
R	931	RS1/16S472J
R	932	RS1/16S473J
R	933	RS1/16S103J
R	934	RS1/16S473J
R	935	RS1/16S104J
R	936	RS1/16S103J
R	937	RS1/16S473J
R	938	RD1/4PU102J
R	939	RD1/4PU102J
R	951	RD1/4PU153J
R	952	RS1/16S472J
R	953	RS1/16S472J
R	954	RS1/16S102J
R	962	RS1/16S102J
R	964	RS1/16S822J
R	982	RS1/16S223J
R	983	RS1/16S223J
R	984	RS1/16S473J
R	985	RD1/4PU102J
R	991	RD1/4PU221J
R	992	RD1/4PU221J
R	993	RS1/16S472J
R	994	RS1/16S222J
R	995	RS1/16S0R0J
R	997	RAB4C102J

=====Circuit Symbol and No.===Part Name			Part No.
CAPACITORS			
C	101		CKSRYB104K16
C	102		CKSRYB104K16
C	139		CKSRYB104K16
C	140		CKSRYB104K16
C	141		CKSRYB104K16
C	142		CKSRYB104K16
C	143		CKSRYB474K10
C	144		CKSRYB474K10
C	145		CCSRCH101J50
C	146		CCSRCH101J50
C	147		CKSRYB103K50
C	161		CKSRYB183K25
C	162		CKSRYB183K25
C	171		CEJQ470M10
C	172		CKSRYB104K16
C	173		CEJQ100M16
C	177		CCSRCH100D50
C	178		CCSRCH100D50
C	179		CCSRCH100D50
C	180		CCSRCH100D50
C	191		CEJQ1R0M50
C	192		CEJQ1R0M50
C	205		CEJQR22M50
C	206		CEJQR22M50
C	207		CEJQ1R0M50
C	208		CEJQ1R0M50
C	209		CEJQ1R0M50
C	210		CEJQ1R0M50
C	211		CEJQNP4R7M16
C	212		CEJQNP4R7M16
C	213		CEJQNP4R7M16
C	214		CEJQNP4R7M16
C	215		CEJQNP4R7M16
C	216		CEJQNP4R7M16
C	217		CEJQNP4R7M16
C	218		CEJQNP4R7M16
C	306		CEHAR330M10
C	307	4700μF/16V	CCH1367
C	309		CKSRYB104K16
C	310		CEHAR100M16
C	311		CKSQYB225K10
C	313		CKSRYB474K10
C	314		CKSRYB474K10
C	315		CKSRYB474K10
C	316		CKSRYB474K10
C	321		CKSRYB474K10
C	322		CKSRYB474K10
C	323		CKSRYB474K10
C	324		CKSRYB474K10
C	325		CKSQYB225K10
C	351		CEJQ100M16
C	352		CEJQ100M16
C	355		CEJQ100M16
C	356		CEJQ100M16
C	403		CKSRYB473K25
C	404		CEJQ101M6R3
C	405		CKSRYB103K50
C	406		CEJQ220M10
C	408		CKSRYB223K50
C	409		CKSRYB223K50
C	411		CKSRYB472K50
C	440		CKSRYB103K50
C	601		CEJQ4R7M35
C	602		CKSRYB102K50
C	603		CKSRYB472K50

=====Circuit Symbol and No.===Part Name			Part No.
C	604		CCSRCH180J50
C	605		CCSRCH220J50
C	755		CKSRYB104K16
C	801		CKSRYB103K50
C	802		CEJQ470M10
C	803		CKSRYB104K16
C	805		CKSRYB103K25
C	806		CKSRYB473K25
C	812		CKSYB105K25
C	851		CEJQ470M16
C	853	4.7μF	CCG1111
C	855		CEJQ100M25
C	856		CCSRCH331J50
C	857		CEJQ330M25
C	858		CKSRYB104K16
C	859		CEJQ101M10
C	860		CKSRYB104K16
C	861		CKSRYB103K50
C	912		CKSRYB472K50
C	913		CKSRYB103K50
C	914		CEJQ470M10
C	921	330μF/10V	CCH1181
C	922		CKSRYB103K50
C	923		CEJQ101M16
C	931		CEJQ100M16
C	932		CKSRYB104K16
C	963		CEJQ2R2M50
C	991		CKSRYB473K25
C	992		CKSRYB102K50
C	993		CEJQ101M10
C	999	470μF/16V	CCH1183

A Unit Number : CWM8316(DEH-P6400/XN/UC)
Unit Name : Tuner Amp Unit

MISCELLANEOUS

IC	101	IC	HA12187FP
IC	132	IC	NJM4558MD
IC	203	IC	PML008A
IC	301	IC	PAL007A
IC	631	IC	PDH0047A
IC	601	IC	PD5699A
IC	801	IC	TC7SET08FU
IC	851	IC	NJM2360M
IC	961	IC	S-80735ANDZI
Q	101	Transistor	2SA1037K
Q	102	Transistor	DTC124EK
Q	301	Transistor	DTC124EK
Q	351	Transistor	IMH3A
Q	353	Transistor	IMH3A
Q	401	Transistor	2SC2412K
Q	801	Transistor	IMD2A
Q	802	Transistor	2SD1760F5
Q	803	Transistor	2SD1767
Q	804	Transistor	IMD2A
Q	805	Transistor	DTC143EK
Q	851	Transistor	2SD1760F5
Q	852	Transistor	IMD2A
Q	911	Transistor	2SD1760F5
Q	913	Transistor	IMD2A
Q	921	Transistor	2SD2396
Q	922	Transistor	DTC114EK
Q	923	Transistor	2SB1238
Q	931	Transistor	IMX1
Q	932	Transistor	2SC2412K
Q	951	Transistor	2SA1037K

=====Circuit Symbol and No.===Part Name			Part No.
Q	981	Transistor	2SC2412K
Q	982	Transistor	IMD2A
Q	991	Transistor	IMD2A
Q	999	Transistor	2SD2396
D	131	Diode Network	DA204U
D	132	Diode Network	DA204U
D	133	Diode	DAN202U
D	134	Diode	DAP202U
D	801	Diode	HZS6L(B1)
D	803	Diode Network	DA204U
D	804	Diode	DAN202U
D	805	Diode	DAP202U
D	806	Diode	DAN202U
D	807	Diode	DAP202U
D	808	Diode	HZS11L(A1)
D	851	Diode	HZS9L(C3)
D	852	Diode	RB411D
D	901	Diode	1SR139-400
D	902	Diode	1SR139-400
D	903	Diode	1SR139-400
D	904	Diode	1SR139-400
D	911	Diode	1SR139-400
D	912	Diode	HZS6L(B1)
D	921	Diode	HZS9L(C1)
D	931	Diode	HZS7L(A1)
D	932	Diode	HZS7L(C3)
D	951	Diode	DAN202U
D	981	Diode	DAN202U
D	982	Diode	HZS9L(A2)
D	991	Diode	HZS9L(B1)
ZNR	451	Surge Protector	DSP-201M-A21F
L	171	Inductor	CTF1530
L	401	Ferri-Inductor	LAU2R2K
L	402	Ferri-Inductor	LAU4R7K
L	403	Inductor	LAU1R0K
L	601	Ferri-Inductor	LAU2R2K
L	801	Inductor	LAU100K
L	802	Ferri-Inductor	LAU2R2K
L	852	Inductor	CTF1510
L	853	Inductor	CTF1489
L	901	Choke Coil 600μH	CTH1221
L	951	Ferri-Inductor	LAU2R2K
X	601	Radiator 10.00MHz	CSS1475
S	801	Switch(DSENS)	CSN1039
		FM/AM Tuner Unit	CWE1563
BZ	641	Buzzer	CPV1050

RESISTORS

=====Circuit Symbol and No.===Part Name		Part No.
R	101	RS1/16S101J
R	102	RS1/16S470J
R	103	RS1/16S101J
R	104	RS1/16S222J
R	105	RS1/16S103J
R	106	RS1/16S562J
R	107	RS1/16S332J
R	108	RS1/16S150J
R	109	RS1/16S181J
R	110	RS1/16S181J
R	111	RS1/16S223J
R	112	RS1/16S223J
R	113	RS1/16S102J
R	114	RS1/16S102J
R	143	RS1/16S104J
R	144	RS1/16S104J
R	145	RS1/16S563J
R	146	RS1/16S563J
R	147	RS1/16S474J
R	148	RS1/16S474J
R	151	RS1/16S0R0J
R	152	RS1/16S0R0J
R	161	RS1/16S272J
R	162	RS1/16S272J
R	163	RS1/16S162J
R	164	RS1/16S162J
R	171	RS1/16S0R0J
R	172	RS1/16S0R0J
R	241	RS1/16S0R0J
R	242	RS1/16S0R0J
R	247	RS1/16S101J
R	248	RS1/16S101J
R	249	RS1/16S101J
R	250	RS1/16S101J
R	287	RS1/16S0R0J
R	288	RS1/16S0R0J
R	289	RS1/16S0R0J
R	290	RS1/16S0R0J
R	301	RS1/16S103J
R	302	RS1/16S103J
R	304	RS1/16S331J
R	351	RS1/16S821J
R	352	RS1/16S821J
R	355	RS1/16S821J
R	356	RS1/16S821J
R	357	RS1/16S223J
R	358	RS1/16S223J
R	361	RS1/16S223J
R	362	RS1/16S223J
R	363	RS1/16S0R0J
R	368	RS1/16S0R0J
R	401	RS1/16S473J
R	402	RS1/16S473J
R	403	RS1/16S681J
R	404	RS1/16S681J
R	409	RS1/16S681J
R	410	RS1/16S103J
R	411	RS1/16S681J
R	412	RS1/16S681J
R	413	RS1/16S681J
R	414	RS1/16S473J
R	415	RS1/16S472J
R	416	RS1/16S473J
R	417	RS1/16S473J
R	418	RS1/16S473J
R	419	RS1/16S222J
R	420	RS1/16S222J
R	424	RS1/16S393J
R	551	RS1/16S0R0J
R	553	RS1/16S0R0J
R	601	RS1/16S473J
R	603	RS1/16S473J
R	606	RS1/16S0R0J
R	608	RS1/16S104J
R	613	RS1/16S222J
R	614	RS1/16S222J
R	615	RS1/16S104J
R	616	RS1/16S473J
R	617	RS1/16S0R0J
R	618	RS1/16S222J
R	619	RS1/16S473J
R	620	RS1/16S472J
R	621	RS1/16S473J
R	622	RS1/16S104J
R	623	RS1/16S473J

=====Circuit Symbol and No.===Part Name			Part No.
R	624		RS1/16S0R0J
R	626		RS1/16S104J
R	630		RS1/16S104J
R	631		RS1/16S102J
R	632		RS1/16S104J
R	633		RS1/16S104J
R	634		RS1/16S473J
R	638		RS1/16S0R0J
R	640		RS1/16S0R0J
R	641		RS1/16S102J
R	642		RS1/16S0R0J
R	643		RS1/16S0R0J
R	650		RS1/16S222J
R	651		RS1/16S222J
R	653		RS1/16S0R0J
R	801		RS1/16S332J
R	804		RS1/16S1R0J
R	805		RS1/16S221J
R	806		RS1/16S221J
R	807		RS1/16S473J
R	808		RS1/16S473J
R	809		RS1/16S102J
R	810		RS1/16S222J
R	811		RS1/16S222J
R	812		RS1/16S222J
R	813		RS1/16S222J
R	814		RS1/16S222J
R	815		RS1/16S473J
R	816		RS1/16S104J
R	817		RD1/4PU391J
R	819		RS1/16S222J
R	820		RS1/16S222J
R	851		RS1/16S331J
R	852		RD1/4PU302J
R	853		RD1/4PU302J
R	854		RS1/16S121J
R	855		RS1/16S391J
R	856		RS1/16S1R0J
R	857		RS1/16S331J
R	912		RS1/16S152J
R	913		RS1/16S223J
R	914		RS1/16S152J
R	921		RS1/10S1R0J
R	922		RD1/4PU221J
R	923		RS1/16S103J
R	924		RD1/4PU222J
R	925		RS1/16S122J
R	931		RS1/16S472J
R	932		RS1/16S473J
R	933		RS1/16S103J
R	934		RS1/16S473J
R	935		RS1/16S104J
R	936		RS1/16S103J
R	937		RS1/16S473J
R	938		RD1/4PU102J
R	939		RD1/4PU102J
R	951		RD1/4PU153J
R	952		RS1/16S472J
R	953		RS1/16S472J
R	954		RS1/16S102J
R	962		RS1/16S102J
R	964		RS1/16S822J
R	982		RS1/16S223J
R	983		RS1/16S223J
R	984		RS1/16S473J

=====Circuit Symbol and No.===Part Name			Part No.
R	985		RD1/4PU102J
R	991		RD1/4PU221J
R	992		RD1/4PU221J
R	993		RS1/16S472J
R	994		RS1/16S222J
R	995		RS1/16S0R0J
R	997		RAB4C102J

CAPACITORS

C	101		CKSRYB104K16
C	102		CKSRYB104K16
C	139		CKSRYB104K16
C	140		CKSRYB104K16
C	141		CKSRYB104K16
C	142		CKSRYB104K16
C	143		CKSRYB474K10
C	144		CKSRYB474K10
C	145		CCSRCH101J50
C	146		CCSRCH101J50
C	147		CKSRYB103K50
C	161		CKSRYB183K25
C	162		CKSRYB183K25
C	171		CEJQ470M10
C	172		CKSRYB104K16
C	173		CEJQ100M16
C	177		CCSRCH100D50
C	178		CCSRCH100D50
C	179		CCSRCH100D50
C	180		CCSRCH100D50
C	191		CEJQ1R0M50
C	192		CEJQ1R0M50
C	205		CEJQR22M50
C	206		CEJQR22M50
C	207		CEJQ1R0M50
C	208		CEJQ1R0M50
C	209		CEJQ1R0M50
C	210		CEJQ1R0M50
C	211		CEJQNP4R7M16
C	212		CEJQNP4R7M16
C	213		CEJQNP4R7M16
C	214		CEJQNP4R7M16
C	215		CEJQNP4R7M16
C	216		CEJQNP4R7M16
C	306		CEHAR330M10
C	307	4700μF/16V	CCH1367
C	309		CKSRYB104K16
C	310		CEHAR100M16
C	311		CKSQYB225K10
C	313		CKSRYB474K10
C	314		CKSRYB474K10
C	315		CKSRYB474K10
C	316		CKSRYB474K10
C	321		CKSRYB474K10
C	322		CKSRYB474K10
C	323		CKSRYB474K10
C	324		CKSRYB474K10
C	325		CKSQYB225K10
C	351		CEJQ100M16
C	352		CEJQ100M16
C	355		CEJQ100M16
C	356		CEJQ100M16
C	403		CKSRYB473K25
C	404		CEJQ101M6R3
C	405		CKSRYB103K50

=====Circuit Symbol and No.===Part Name			Part No.
C	406		CEJQ220M10
C	408		CKSRYB223K50
C	409		CKSRYB223K50
C	411		CKSRYB472K50
C	440		CKSRYB103K50
C	601		CEJQ4R7M35
C	602		CKSRYB102K50
C	603		CKSRYB472K50
C	604		CCSRCH180J50
C	605		CCSRCH220J50
C	801		CKSRYB103K50
C	802		CEJQ470M10
C	803		CKSRYB104K16
C	805		CKSRYB103K25
C	806		CKSRYB473K25
C	812		CKSYB105K25
C	851		CEJQ470M16
C	853	4.7μF	CCG1111
C	855		CEJQ100M25
C	856		CCSRCH331J50
C	857		CEJQ330M25
C	858		CKSRYB104K16
C	859		CEJQ101M10
C	860		CKSRYB104K16
C	861		CKSRYB103K50
C	912		CKSRYB472K50
C	913		CKSRYB103K50
C	914		CEJQ470M10
C	921	330μF/10V	CCH1181
C	922		CKSRYB103K50
C	923		CEJQ101M16
C	931		CEJQ100M16
C	932		CKSRYB104K16
C	963		CEJQ2R2M50
C	991		CKSRYB473K25
C	992		CKSRYB102K50
C	993		CEJQ101M10
C	999	470μF/16V	CCH1183

A Unit Number : CWM8097(DEH-P6450/XN/ES)
Unit Name : Tuner Amp Unit

MISCELLANEOUS

IC	101	IC	HA12187FP
IC	132	IC	NJM4558MD
IC	203	IC	PML008A
IC	301	IC	PAL007A
IC	601	IC	PD5699A
IC	631	IC	PDH0047A
IC	801	IC	TC7SET08FU
IC	851	IC	NJM2360M
IC	961	IC	S-80735ANDZI
Q	101	Transistor	2SA1037K
Q	102	Transistor	DTC124EK
Q	301	Transistor	DTC124EK
Q	351	Transistor	IMH3A
Q	353	Transistor	IMH3A
Q	401	Transistor	2SC2412K
Q	801	Transistor	IMD2A
Q	802	Transistor	2SD1760F5
Q	803	Transistor	2SD1767
Q	804	Transistor	IMD2A
Q	805	Transistor	DTC143EK
Q	851	Transistor	2SD1760F5
Q	852	Transistor	IMD2A
Q	911	Transistor	2SD1760F5
Q	913	Transistor	IMD2A
Q	921	Transistor	2SD2396

=====Circuit Symbol and No.===Part Name			Part No.
Q	922	Transistor	DTC114EK
Q	923	Transistor	2SB1238
Q	931	Transistor	IMX1
Q	932	Transistor	2SC2412K
Q	951	Transistor	2SA1037K
Q	981	Transistor	2SC2412K
Q	982	Transistor	IMD2A
Q	991	Transistor	IMD2A
Q	999	Transistor	2SD2396
D	131	Diode Network	DA204U
D	132	Diode Network	DA204U
D	133	Diode	DAN202U
D	134	Diode	DAP202U
D	801	Diode	HZS6L(B1)
D	803	Diode Network	DA204U
D	804	Diode	DAN202U
D	805	Diode	DAP202U
D	806	Diode	DAN202U
D	807	Diode	DAP202U
D	808	Diode	HZS11L(A1)
D	851	Diode	HZS9L(C3)
D	852	Diode	RB411D
D	901	Diode	1SR139-400
D	902	Diode	1SR139-400
D	903	Diode	1SR139-400
D	904	Diode	1SR139-400
D	911	Diode	1SR139-400
D	912	Diode	HZS6L(B1)
D	921	Diode	HZS9L(C1)
D	931	Diode	HZS7L(A1)
D	932	Diode	HZS7L(C3)
D	951	Diode	DAN202U
D	981	Diode	DAN202U
D	982	Diode	HZS9L(A2)
D	991	Diode	HZS9L(B1)
ZNR	451	Surge Protector	DSP-201M-A21F
L	171	Inductor	CTF1530
L	401	Ferri-Inductor	LAU2R2K
L	402	Ferri-Inductor	LAU4R7K
L	403	Inductor	LAU1R0K
L	601	Ferri-Inductor	LAU2R2K
L	801	Inductor	LAU100K
L	802	Ferri-Inductor	LAU2R2K
L	852	Inductor	CTF1510
L	853	Inductor	CTF1489
L	901	Choke Coil 600μH	CTH1221
L	951	Ferri-Inductor	LAU2R2K
X	601	Radiator 10.00MHz	CSS1475
S	801	Switch(DSENS)	CSN1039
		FM/AM Tuner Unit	CWE1563
BZ	641	Buzzer	CPV1050

RESISTORS

R	101	RS1/16S101J
R	102	RS1/16S470J
R	103	RS1/16S101J
R	104	RS1/16S222J
R	105	RS1/16S103J
R	106	RS1/16S562J
R	107	RS1/16S332J
R	108	RS1/16S150J
R	109	RS1/16S181J
R	110	RS1/16S181J
R	111	RS1/16S223J
R	112	RS1/16S223J
R	113	RS1/16S102J
R	114	RS1/16S102J
R	143	RS1/16S104J

=====Circuit Symbol and No.===Part Name		Part No.
R	144	RS1/16S104J
R	145	RS1/16S563J
R	146	RS1/16S563J
R	147	RS1/16S474J
R	148	RS1/16S474J
R	151	RS1/16S0R0J
R	152	RS1/16S0R0J
R	161	RS1/16S272J
R	162	RS1/16S272J
R	163	RS1/16S162J
R	164	RS1/16S162J
R	171	RS1/16S0R0J
R	172	RS1/16S0R0J
R	241	RS1/16S0R0J
R	242	RS1/16S0R0J
R	247	RS1/16S101J
R	248	RS1/16S101J
R	249	RS1/16S101J
R	250	RS1/16S101J
R	287	RS1/16S0R0J
R	288	RS1/16S0R0J
R	289	RS1/16S0R0J
R	290	RS1/16S0R0J
R	301	RS1/16S103J
R	302	RS1/16S103J
R	304	RS1/16S331J
R	351	RS1/16S821J
R	352	RS1/16S821J
R	355	RS1/16S821J
R	356	RS1/16S821J
R	357	RS1/16S223J
R	358	RS1/16S223J
R	361	RS1/16S223J
R	362	RS1/16S223J
R	363	RS1/16S0R0J
R	368	RS1/16S0R0J
R	401	RS1/16S473J
R	402	RS1/16S473J
R	403	RS1/16S681J
R	404	RS1/16S681J
R	409	RS1/16S681J
R	410	RS1/16S103J
R	411	RS1/16S681J
R	412	RS1/16S681J
R	413	RS1/16S681J
R	414	RS1/16S473J
R	415	RS1/16S472J
R	416	RS1/16S473J
R	417	RS1/16S473J
R	418	RS1/16S473J
R	419	RS1/16S222J
R	420	RS1/16S222J
R	424	RS1/16S393J
R	551	RS1/16S0R0J
R	553	RS1/16S0R0J
R	602	RS1/16S473J
R	603	RS1/16S473J
R	606	RS1/16S0R0J
R	608	RS1/16S104J
R	613	RS1/16S222J
R	614	RS1/16S222J
R	615	RS1/16S104J
R	616	RS1/16S473J
R	617	RS1/16S0R0J
R	618	RS1/16S222J

=====Circuit Symbol and No.===Part Name		Part No.
R	619	RS1/16S473J
R	620	RS1/16S472J
R	621	RS1/16S473J
R	622	RS1/16S104J
R	623	RS1/16S473J
R	624	RS1/16S0R0J
R	626	RS1/16S104J
R	630	RS1/16S104J
R	631	RS1/16S102J
R	632	RS1/16S104J
R	633	RS1/16S104J
R	634	RS1/16S473J
R	638	RS1/16S0R0J
R	640	RS1/16S0R0J
R	641	RS1/16S102J
R	642	RS1/16S0R0J
R	643	RS1/16S0R0J
R	650	RS1/16S222J
R	651	RS1/16S222J
R	653	RS1/16S0R0J
R	801	RS1/16S332J
R	804	RS1/16S1R0J
R	805	RS1/16S221J
R	806	RS1/16S221J
R	807	RS1/16S473J
R	808	RS1/16S473J
R	809	RS1/16S102J
R	810	RS1/16S222J
R	811	RS1/16S222J
R	812	RS1/16S222J
R	813	RS1/16S222J
R	814	RS1/16S222J
R	815	RS1/16S473J
R	816	RS1/16S104J
R	817	RD1/4PU391J
R	819	RS1/16S222J
R	820	RS1/16S222J
R	851	RS1/16S331J
R	852	RD1/4PU302J
R	853	RD1/4PU302J
R	854	RS1/16S121J
R	855	RS1/16S391J
R	856	RS1/16S1R0J
R	857	RS1/16S331J
R	912	RS1/16S152J
R	913	RS1/16S223J
R	914	RS1/16S152J
R	921	RS1/10S1R0J
R	922	RD1/4PU221J
R	923	RS1/16S103J
R	924	RD1/4PU222J
R	925	RS1/16S122J
R	931	RS1/16S472J
R	932	RS1/16S473J
R	933	RS1/16S103J
R	934	RS1/16S473J
R	935	RS1/16S104J
R	936	RS1/16S103J
R	937	RS1/16S473J
R	938	RD1/4PU102J
R	939	RD1/4PU102J
R	951	RD1/4PU153J
R	952	RS1/16S472J
R	953	RS1/16S472J
R	954	RS1/16S102J

=====Circuit Symbol and No.===Part Name			Part No.
R	962		RS1/16S102J
R	964		RS1/16S822J
R	982		RS1/16S223J
R	983		RS1/16S223J
R	984		RS1/16S473J
R	985		RD1/4PU102J
R	991		RD1/4PU221J
R	992		RD1/4PU221J
R	993		RS1/16S472J
R	994		RS1/16S222J
R	995		RS1/16S0R0J
R	997		RAB4C102J

CAPACITORS

C	101		CKSRYB104K16
C	102		CKSRYB104K16
C	139		CKSRYB104K16
C	140		CKSRYB104K16
C	141		CKSRYB104K16
C	142		CKSRYB104K16
C	143		CKSRYB474K10
C	144		CKSRYB474K10
C	145		CCSRCH101J50
C	146		CCSRCH101J50
C	147		CKSRYB103K50
C	161		CKSRYB183K25
C	162		CKSRYB183K25
C	171		CEJQ470M10
C	172		CKSRYB104K16
C	173		CEJQ100M16
C	177		CCSRCH100D50
C	178		CCSRCH100D50
C	179		CCSRCH100D50
C	180		CCSRCH100D50
C	191		CEJQ1R0M50
C	192		CEJQ1R0M50
C	205		CEJQR22M50
C	206		CEJQR22M50
C	207		CEJQ1R0M50
C	208		CEJQ1R0M50
C	209		CEJQ1R0M50
C	210		CEJQ1R0M50
C	211		CEJQNP4R7M16
C	212		CEJQNP4R7M16
C	213		CEJQNP4R7M16
C	214		CEJQNP4R7M16
C	215		CEJQNP4R7M16
C	216		CEJQNP4R7M16
C	306		CEHAR330M10
C	307	4700μF/16V	CCH1367
C	309		CKSRYB104K16
C	310		CEHAR100M16
C	311		CKSQYB225K10
C	313		CKSRYB474K10
C	314		CKSRYB474K10
C	315		CKSRYB474K10
C	316		CKSRYB474K10
C	321		CKSRYB474K10
C	322		CKSRYB474K10
C	323		CKSRYB474K10
C	324		CKSRYB474K10
C	325		CKSQYB225K10
C	351		CEJQ100M16
C	352		CEJQ100M16
C	355		CEJQ100M16
C	356		CEJQ100M16
C	403		CKSRYB473K25
C	404		CEJQ101M6R3
C	405		CKSRYB103K50

=====Circuit Symbol and No.===Part Name			Part No.
C	406		CEJQ220M10
C	408		CKSRYB223K50
C	409		CKSRYB223K50
C	411		CKSRYB472K50
C	440		CKSRYB103K50
C	601		CEJQ4R7M35
C	602		CKSRYB102K50
C	603		CKSRYB472K50
C	604		CCSRCH180J50
C	605		CCSRCH220J50
C	801		CKSRYB103K50
C	802		CEJQ470M10
C	803		CKSRYB104K16
C	805		CKSRYB103K25
C	806		CKSRYB473K25
C	812		CKSYB105K25
C	851		CEJQ470M16
C	853	4.7μF	CCG1111
C	855		CEJQ100M25
C	856		CCSRCH331J50
C	857		CEJQ330M25
C	858		CKSRYB104K16
C	859		CEJQ101M10
C	860		CKSRYB104K16
C	861		CKSRYB103K50
C	912		CKSRYB472K50
C	913		CKSRYB103K50
C	914		CEJQ470M10
C	921	330μF/10V	CCH1181
C	922		CKSRYB103K50
C	923		CEJQ101M16
C	931		CEJQ100M16
C	932		CKSRYB104K16
C	963		CEJQ2R2M50
C	991		CKSRYB473K25
C	992		CKSRYB102K50
C	993		CEJQ101M10
C	999	470μF/16V	CCH1183

C Unit Number : CWM8098(DEH-P640/XN/UC)
Unit Name : Keyboard Unit

MISCELLANEOUS

IC	1901	IC	PD5706A
IC	1902	IC	PD8089A
IC	1903	IC	TSOP1840SB3V
IC	1904	IC	S-818A33AUC-BGN
Q	1941	Transistor	2SD1664
Q	1942	Transistor	2SC4617
D	1901	Diode	DAP202U
D	1902	Diode	DAN202U
D	1906	Diode	1SS355
D	1979	LED	CL170PGCD
D	1980	LED	CL170PGCD
D	1981	LED	CL170PGCD
D	1983	LED	CL170PGCD
D	1984	LED	CL170PGCD
D	1993	LED	CL170PGCD
D	1996	LED	CL170PGCD
L	1901	Inductor	CTF1530
L	1902	Inductor	CTF1530
L	1922	Inductor-Array	CTF1421
L	1923	Inductor-Array	CTF1421
L	1924	Inductor-Array	CTF1421
L	1990	Inductor-Array	CTF1421
TH	1941	Thermistor	CCX1037
X	1901	Radiator 10.0MHz	CSS1577
S	1901	Switch	CSG1107

=====Circuit Symbol and No.===Part Name			Part No.
S	1903	Push Switch	CSG1111
S	1906	Switch	CSG1107
S	1907	Switch	CSG1107
S	1908	Push Switch	CSG1111
S	1909	Switch	CSG1107
S	1910	Switch	CSG1107
S	1911	Switch	CSG1107
S	1912	Switch	CSG1107
S	1913	Switch	CSG1107
S	1914	Switch	CSG1107
S	1915	Switch	CSG1107
S	1916	Switch	CSG1107
S	1917	Switch	CSG1107
S	1918	Switch	CSG1107
S	1919	Switch	CSG1107
S	1920	Switch	CSG1107
S	1922	Switch	CSG1107
S	1923	Switch	CSG1107
S	1924	Switch	CSG1107
S	1930	Encoder(VOLUME)	CSD1059
VR	1941	Semi-fixed 20kΩ(B)	CCP1231
		OEL Unit	MXS8017

RESISTORS

R	1901		RS1/16S222J
R	1902		RS1/16S222J
R	1903		RS1/16S473J
R	1904		RS1/16S103J
R	1905		RS1/16S682J
R	1906		RS1/16S121J
R	1907		RS1/16S2R2J
R	1908		RS1/16S222J
R	1909		RS1/16S154J
R	1910		RS1/16S473J
R	1911		RAB4C101J
R	1912		RS1/16S473J
R	1913		RS1/16S473J
R	1914		RS1/16S103J
R	1915		RAB4C101J
R	1916		RS1/16S101J
R	1917		RAB4C101J
R	1918		RAB4C101J
R	1919		RAB4C101J
R	1920		RAB4C101J
R	1925		RAB4C101J
R	1926		RS1/16S101J
R	1931		RS1/16S0R0J
R	1941		RS1/16S333J
R	1942		RS1/16S683J
R	1943		RS1/16S392J
R	1944		RS1/16S393J
R	1945		RAB4C102J
R	1946		RS1/16S222J
R	1947		RS1/16S103J
R	1949		RS1/16S102J
R	1950		RS1/16S102J
R	1966		RS1/16S101J
R	1967		RS1/16S101J
R	1968		RS1/16S101J
R	1969		RS1/16S101J
R	1970		RS1/16S270J
R	1971		RS1/16S270J
R	1972		RS1/16S270J
R	1973		RS1/16S270J
R	1974		RS1/16S270J
R	1975		RS1/16S270J
R	1976		RS1/16S101J
R	1977		RS1/16S101J
R	1978		RS1/16S181J
R	1979		RS1/16S181J
R	1980		RS1/16S0R0J
R	1985		RS1/16S0R0J
R	1986		RS1/16S181J
R	1987		RS1/16S181J

CAPACITORS

C	1901		CKSYB105K25
C	1902		CKSRYB104K16
C	1903		CKSRYB474K10
C	1905		CKSRYB103K25
C	1909		CKSRYB473K16
C	1910		CSZSR4R7M10
C	1911		CKSRYB103K25
C	1912		CSZSR4R7M10
C	1913		CKSRYB103K50
C	1914		CSZSR4R7M10
C	1941		CKSRYB104K25
C	1942		CKSRYB104K16
C	1943		CKSRYB104K25
C	1944		CKSRYB104K25
C	1945		CKSRYB104K25
C	1946		CKSRYB104K16
C	1947		CKSRYB104K25
C	1972		CKSRYB103K25

C Unit Number : CWM7990(DEH-P6400/XN/UC, DEH-P6450/XN/ES)
Unit Name : Keyboard Unit

MISCELLANEOUS

IC	1901	IC	PD5706A
IC	1902	IC	PD8088A
IC	1903	IC	TSOP1840SB3V
IC	1904	IC	S-818A33AUC-BGN
Q	1941	Transistor	2SD1664
Q	1942	Transistor	2SC4617
D	1901	Diode	DAP202U
D	1902	Diode	DAN202U
D	1906	Diode	1SS355
D	1979	LED	CL170PGCD
D	1980	LED	CL170PGCD
D	1981	LED	CL170PGCD
D	1983	LED	CL170PGCD
D	1984	LED	CL170PGCD
D	1993	LED	CL170PGCD
D	1996	LED	CL170PGCD
L	1901	Inductor	CTF1530
L	1902	Inductor	CTF1530
L	1922	Inductor-Array	CTF1421
L	1923	Inductor-Array	CTF1421
L	1924	Inductor-Array	CTF1421
L	1990	Inductor-Array	CTF1421
TH	1941	Thermistor	CCX1037
X	1901	Radiator 10.0MHz	CSS1577
S	1901	Switch	CSG1107
S	1903	Push Switch	CSG1111
S	1906	Switch	CSG1107
S	1907	Switch	CSG1107
S	1908	Push Switch	CSG1111
S	1909	Switch	CSG1107

=====Circuit Symbol and No.===Part Name			Part No.
S	1910	Switch	CSG1107
S	1911	Switch	CSG1107
S	1912	Switch	CSG1107
S	1913	Switch	CSG1107
S	1914	Switch	CSG1107
S	1915	Switch	CSG1107
S	1916	Switch	CSG1107
S	1917	Switch	CSG1107
S	1918	Switch	CSG1107
S	1919	Switch	CSG1107
S	1920	Switch	CSG1107
S	1922	Switch	CSG1107
S	1923	Switch	CSG1107
S	1924	Switch	CSG1107
S	1930	Encoder(VOLUME)	CSD1059
VR	1941	Semi-fixed 20kΩ(B)	CCP1231
		OEL Unit	MXS8017

RESISTORS

R	1901		RS1/16S222J
R	1902		RS1/16S222J
R	1903		RS1/16S473J
R	1904		RS1/16S103J
R	1905		RS1/16S682J
R	1906		RS1/16S121J
R	1907		RS1/16S2R2J
R	1908		RS1/16S222J
R	1909		RS1/16S154J
R	1910		RS1/16S473J
R	1911		RAB4C101J
R	1912		RS1/16S473J
R	1913		RS1/16S473J
R	1914		RS1/16S103J
R	1915		RAB4C101J
R	1916		RS1/16S101J
R	1917		RAB4C101J
R	1918		RAB4C101J
R	1919		RAB4C101J
R	1920		RAB4C101J
R	1925		RAB4C101J
R	1926		RS1/16S101J
R	1931		RS1/16S0R0J
R	1941		RS1/16S333J
R	1942		RS1/16S683J
R	1943		RS1/16S392J
R	1944		RS1/16S393J
R	1945		RAB4C102J
R	1946		RS1/16S222J
R	1947		RS1/16S103J
R	1949		RS1/16S102J
R	1950		RS1/16S102J
R	1966		RS1/16S101J
R	1967		RS1/16S101J
R	1968		RS1/16S101J
R	1969		RS1/16S101J
R	1970		RS1/16S270J
R	1971		RS1/16S270J
R	1972		RS1/16S270J
R	1973		RS1/16S270J
R	1974		RS1/16S270J
R	1975		RS1/16S270J
R	1976		RS1/16S101J
R	1977		RS1/16S101J
R	1978		RS1/16S181J
R	1979		RS1/16S181J
R	1980		RS1/16S0R0J
R	1985		RS1/16S0R0J
R	1986		RS1/16S181J
R	1987		RS1/16S181J

=====Circuit Symbol and No.===Part Name			Part No.

CAPACITORS

C	1901		CKSYB105K25
C	1902		CKSRYB104K16
C	1903		CKSRYB474K10
C	1905		CKSRYB103K25
C	1909		CKSRYB473K16
C	1910		CSZSR4R7M10
C	1911		CKSRYB103K25
C	1912		CSZSR4R7M10
C	1913		CKSRYB103K50
C	1914		CSZSR4R7M10
C	1941		CKSRYB104K25
C	1942		CKSRYB104K16
C	1943		CKSRYB104K25
C	1944		CKSRYB104K25
C	1945		CKSRYB104K25
C	1946		CKSRYB104K16
C	1947		CKSRYB104K25
C	1972		CKSRYB103K25

B Unit Number : CWM7986
Unit Name : Panel Unit

D	1850	LED	CL220PGC
S	1850	Push Switch(EJECT)	CSG1112
R	1852		RS1/16S101J
R	1853		RS1/16S101J
C	1863		CKSRYB223K50

D Unit Number : CWX2481
Unit Name : Control Unit

MISCELLANEOUS

IC	101	IC	TA2153FN
IC	201	IC	TC9495F2
IC	401	IC	BA5996FM
IC	701	IC	BA05SFP
Q	101	Transistor	2SD1664
Q	102	Transistor	UMD2N
L	201	Inductor	CTF1546
L	202	Inductor	CTF1546
X	301	Ceramic Resonator 16.934MHz	CSS1525
S	901	Spring Switch(HOME)	CSN1051
S	902	Spring Switch(CLAMP)	CSN1052
S	903	Spring Switch(DSCSNS)	CSN1051
S	904	Spring Switch(12EJ)	CSN1052
S	905	Spring Switch(8EJ)	CSN1051

RESISTORS

R	101		RS1/16S222J
R	102		RS1/8S120J
R	103		RS1/8S100J
R	201		RS1/16S513J
R	202		RS1/16S513J
R	203		RS1/16S823J
R	204		RS1/16S823J
R	206		RS1/16S823J
R	208		RS1/16S124J
R	209		RS1/16S183J
R	210		RS1/16S153J
R	211		RS1/16S103J
R	212		RS1/16S103J
R	213		RS1/16S124J
R	215		RS1/16S0R0J
R	216		RS1/16S471J
R	301		RS1/16S333J
R	302		RS1/16S332J
R	303		RS1/16S332J
R	304		RS1/16S514J

=====Circuit Symbol and No.===Part Name			Part No.
R	306		RS1/16S102J
R	307		RS1/16S102J
R	312		RS1/16S103J
R	313		RS1/16S473J
R	315		RS1/16S334J
R	321		RS1/16S331J
R	322		RS1/16S0R0J
R	323		RS1/16S332J
R	401		RS1/16S684J
R	402		RS1/16S103J
R	403		RS1/16S103J
R	404		RS1/16S183J
R	405		RS1/16S123J
R	407		RS1/16S622J
R	408		RS1/16S622J
R	409		RS1/16S113J
R	410		RS1/16S752J
R	701		RS1/16S102J
R	702		RS1/16S221J
R	703		RS1/16S221J
R	704		RS1/16S221J
R	705		RS1/16S221J
R	706		RS1/16S221J
R	707		RS1/16S221J
R	708		RS1/16S102J
R	709		RS1/16S102J
R	710		RS1/16S102J
R	901		RS1/16S104J
R	902		RS1/16S473J
R	903		RS1/16S273J

CAPACITORS

C	101		CEV470M6R3
C	102		CKSRYB102K50
C	103		CKSRYB104K16
C	104		CKSRYB224K16
C	105		CEV470M6R3
C	106		CKSRYB104K16
C	107		CKSRYB105K6R3
C	201		CKSRYB104K16
C	202		CCSRCH560J50
C	204		CKSRYB224K16
C	205		CKSRYB224K16
C	206		CKSRYB273K25
C	207		CKSRYB273K25
C	208		CKSRYB104K16
C	209		CKSRYB104K16
C	210		CCSRCK2R0C50
C	211		CCSRCH220J50
C	301		CKSRYB153K25
C	302		CKSRYB104K16
C	303		CKSRYB103K50
C	304		CKSRYB103K50
C	305		CKSRYB104K16
C	306		CKSRYB104K16
C	307		CKSRYB333K16
C	308		CKSRYB104K16
C	309		CKSRYB473K16
C	310		CKSRYB473K16
C	311		CKSRYB104K16
C	312		CKSRYB104K16
C	315		CEV220M6R3
C	317		CKSRYB104K16
C	318		CKSRYB104K16
C	319		CKSRYB104K16
C	320		CCSRCH470J50
C	325		CKSRYB471K50

=====Circuit Symbol and No.===Part Name			Part No.
C	328		CKSRYB472K50
C	329		CKSRYB104K16
C	330		CKSRYB104K16
C	331		CKSRYB104K16
C	401		CKSRYB221K50
C	402		CKSRYB221K50
C	403		CKSRYB153K25
C	404		CKSRYB103K50
C	405		CEV101M10
C	702		CKSRYB104K16
C	703		CKSRYB104K16
C	801	10μF/10V	CCH1349
C	802		CEV101M10
C	803		CKSRYB224K16

Miscellaneous Parts List

		Pickup Unit(Service)(P9)	CXX1480
M	1	Motor Unit(SPINDLE)	CXB6007
M	2	Motor Unit(LOADING/CARRIAGE)	CXB5903

6. ADJUSTMENT

6.1 OEL UNIT ADJUSTMENT

● **Adjustment point**

KEYBOARD UNIT (SIDE B)

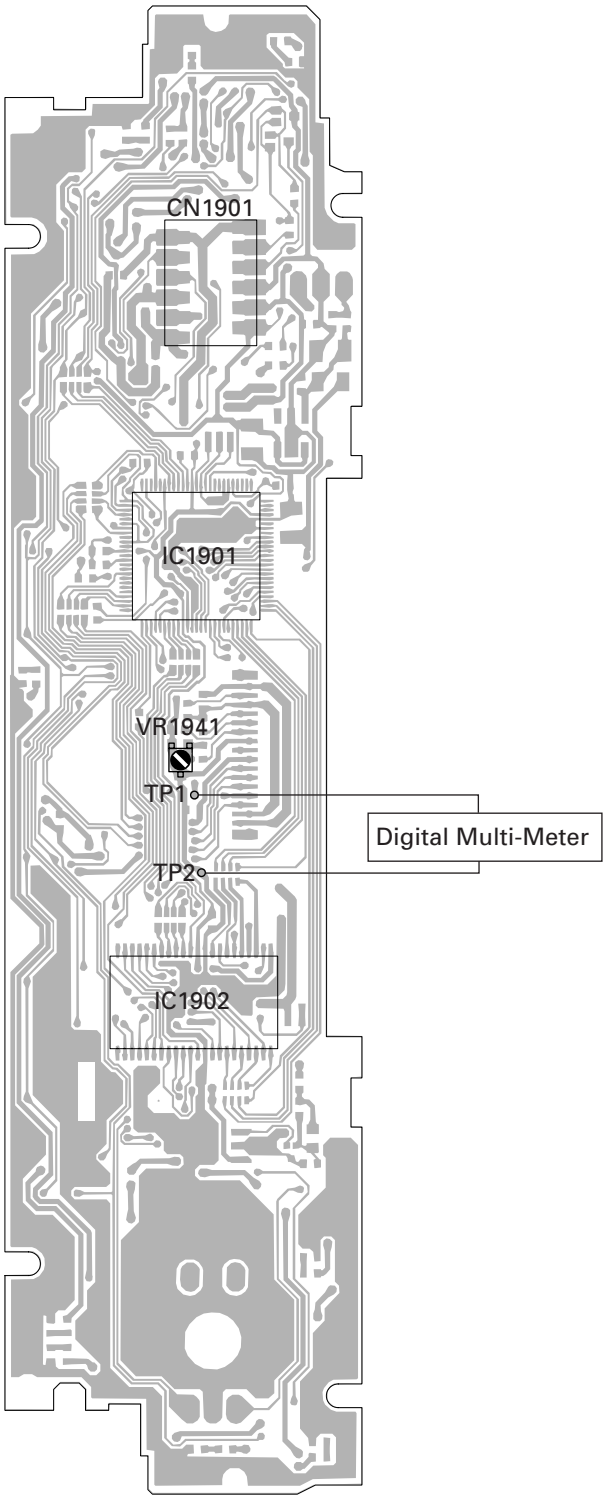

<When the OEL Unit has been replaced>

1. Use VR1941 to adjust the resistance between TP1 and TP2 to 6.60kΩ.

6.2 CD ADJUSTMENT

1) Precautions

- This unit uses a single power supply (+5V) for the regulator. The signal reference potential, therefore, is connected to VREF(approx. 2.1V) instead of GND.
  If VREF and GND are connected to each other by mistake during adjustments, not only will it be impossible to measure the potential correctly, but the servo will malfunction and a severe shock will be applied to the pick-up. To avoid this, take special note of the following.
  Do not connect the negative probe of the measuring equipment to VREF and GND together. It is especially important not to connect the channel 1 negative probe of the oscilloscope to VREF with the channel 2 negative probe connected to GND.
  Since the frame of the measuring instrument is usually at the same potential as the negative probe, change the frame of the measuring instrument to floating status.
  If by accident VREF comes in contact with GND, immediately switch the regulator or power OFF.

- Always make sure the regulator is OFF when connecting and disconnecting the various filters and wiring required for measurements.

- Before proceeding to further adjustments and measurements after switching regulator ON, let the player run for about one minute to allow the circuits to stabilize.

- Since the protective systems in the unit's software are rendered inoperative in test mode, be very careful to avoid mechanical and /or electrical shocks to the system when making adjustment.

- The RFI and RFO signals are easy to oscillate because of a wide band. When observing them, insert a resistor of about 1 kΩ to the series.

- This equipment will not guarantee the load ejection operation when the mechanical unit is turned upside down. In particular, if the ejection operation is incorrectly performed and recovery is disabled, the recovery is enabled by resetting a product or turning ACC off to on.

2) Test Mode

This mode is used for adjusting the CD mechanism module of the device.

- Test mode starting procedure
  Reset while pressing the **4** and **6** keys together.

- Test mode cancellation
  Switch ACC, back-up OFF.

- After pressing the EJECT key, do not press any other key until the disk is completely ejected.

- If the ► or ◄ key is pressed while focus search is in progress, immediately turn the power off (otherwise the actuator may be damaged due to adhesion of the lenses).

- Jump operation of TRs other than 100TR continues after releasing the key. CRG move and 100TR jump operations are brought into the “Tracking close” status when the key is released.

- Powering Off/On resets the jump mode to “Single TR(91)”, the RF AMP gain setting to 0 dB, and the automatic adjustment value to the initial value.

● Flow Chart

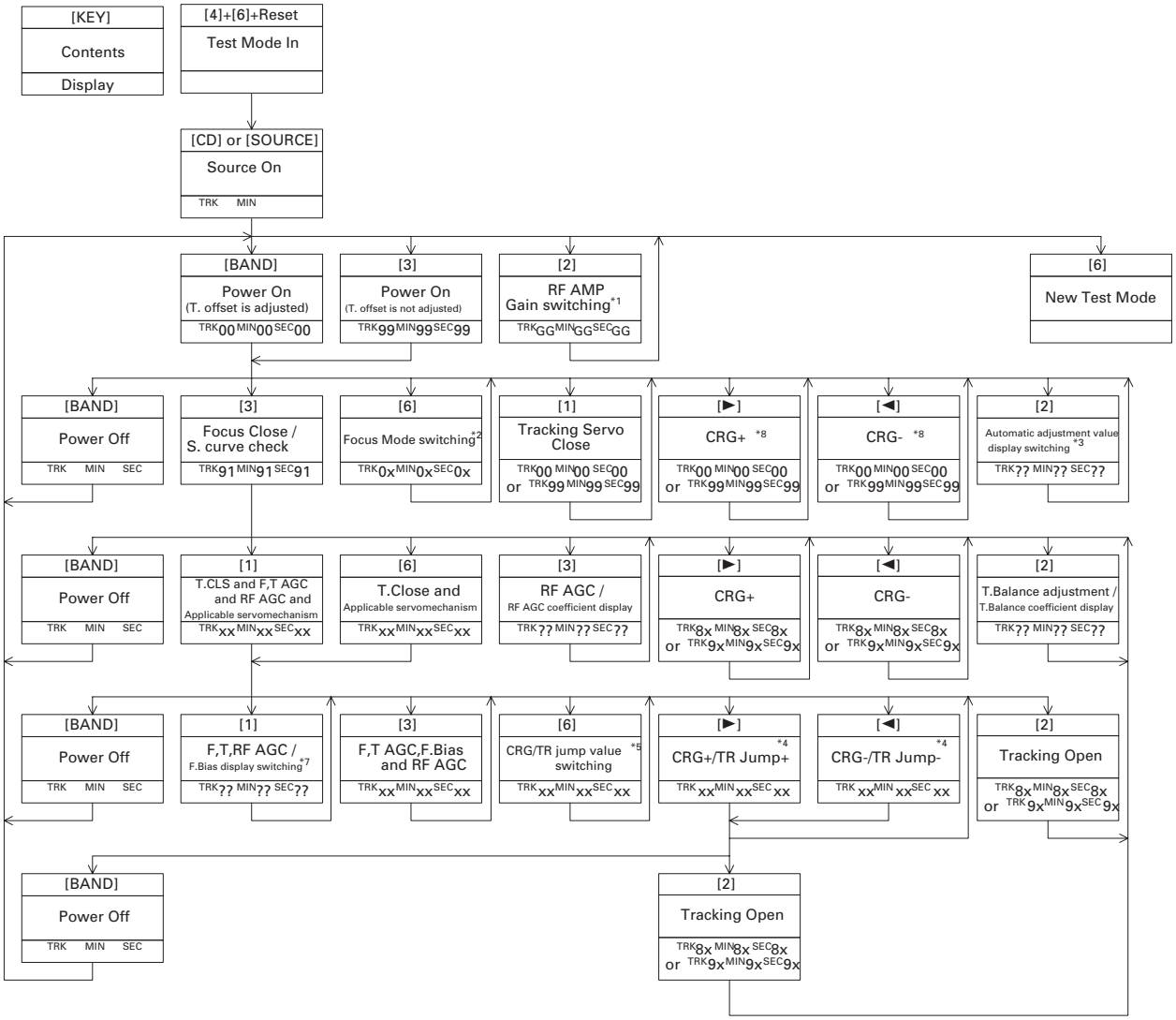

*1) TYP (TRK MIN SEC) → +12dB (TRK12MIN12SEC12)

*2) Focus Close setting (TRK00MIN00SEC00 or TRK99MIN99SEC99) → S. curve check setting (TRK01MIN01SEC01) → F. EQ measurement setting (TRK02MIN02SEC02)

*3) F.Offset Display → T.Offset Display → Switch to the order of the original display

*4) 1TR/32TR/100TR

*5 Single TR (TRK91MIN91SEC91 or TRK81MIN81SEC81) → 32TR (TRK92MIN92SEC92 or TRK82MIN82SEC82) → 100TR (TRK93MIN93SEC93 or TRK83MIN83SEC83) → CRG Move (TRK94MIN94SEC94 or TRK84MIN84SEC84)

*6) Only at the time of CRG move or 100TR jump

*7) TRK/MIN/SEC → F.AGC Gain → T.AGC Gain → F.Bias → RF AGC Gain

*8) CRG motor voltage = 2 [V]

[Key]	Operation	
	Test Mode	New Test Mode
[BAND]	Power On/Off	Error occurrence time/ cause display switching
[▶]	CRG +/TR Jump+ (Direction of the external surface)	TRK+/FF
[◀]	CRG -/TR Jump- (Direction of the internal surface)	TRK-/REV
[1]	T.CLS and AGC and Applicable servomechanism/ AGC,AGC display switching	SCAN
[2]	RF Gain switching/Offset adjustment display/ T.Balance adjustment/T.OPN	MODE
[3]	F.CLS,S.Curve/Rough Servo and RF AGC/ F,T,RF AGC	(ITP)
-	SPDL 1X/2X switching (Double-speed compatibility only)	-
-	Error rate measurement	-
[6]	F.Mode switching/T.CLS/CRG,TR Jump switching	Auto/Manual switching

6.3 CHECKING THE GRATING AFTER CHANGING THE PICKUP UNIT

• **Note :**
The grating angle of the PU unit cannot be adjusted after the PU unit is changed. The PU unit in the CD mechanism module is adjusted on the production line to match the CD mechanism module and is thus the best adjusted PU unit for the CD mechanism module. Changing the PU unit is thus best considered as a last resort. However, if the PU unit must be changed, the grating should be checked using the procedure below.

• **Purpose :**
To check that the grating is within an acceptable range when the PU unit is changed.

• **Symptoms of Mal-adjustment :**
If the grating is off by a large amount symptoms such as being unable to close tracking, being unable to perform track search operations, or taking a long time for track searching.

• **Method :**

• Measuring Equipment	• Oscilloscope, Two L.P.F.
• Measuring Points	• E, F, VREF
• Disc	• ABEX TCD-784
• Mode	• TEST MODE

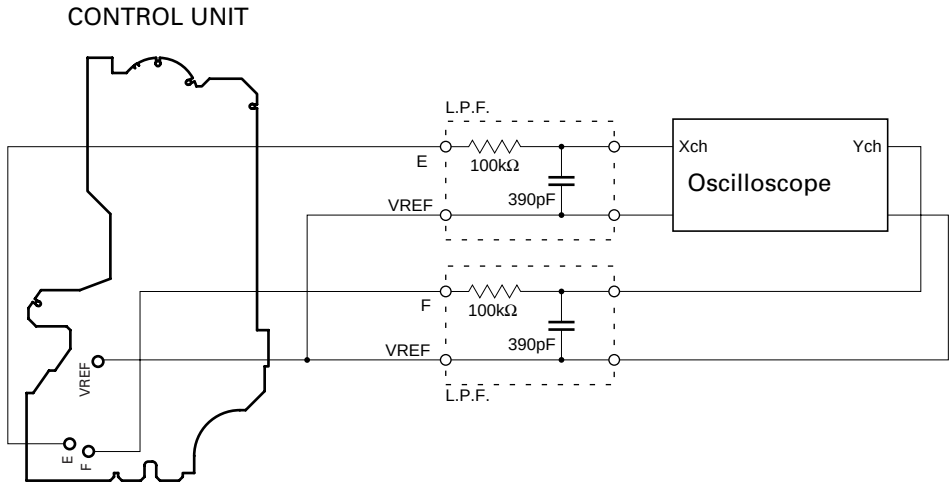

• **Checking Procedure**
1. In test mode, load the disc and switch the 5V regulator on.
2. Using the ► and ◄ buttons, move the PU unit to the innermost track.
3. Press key **3** to close focus, the display should read "91". Press key **2** to implement the tracking balance adjustment the display should now read "81". Press key **3**. The display will change, returning to "81" on the fourth press.
4. As shown in the diagram above, monitor the LPF outputs using the oscilloscope and check that the phase difference is within 75° . Refer to the photographs supplied to determine the phase angle.
5. If the phase difference is determined to be greater than 75° try changing the PU unit to see if there is any improvement. If, after trying this a number of times, the grating angle does not become less than 75° then the mechanism should be judged to be at fault.

• **Note**
Because of eccentricity in the disc and a slight misalignment of the clamping center the grating waveform may be seen to "wobble" (the phase difference changes as the disc rotates). The angle specified above indicates the average angle.

• **Hint**
Reloading the disc changes the clamp position and may decrease the "wobble".

Grating waveform

Ech → Xch 20mV/div, AC
Fch → Ych 20mV/div, AC

0°

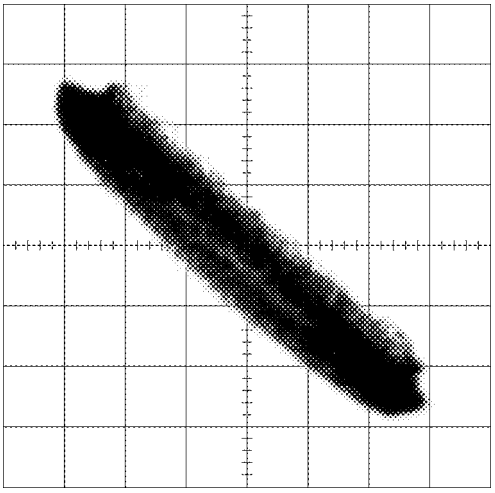

30°

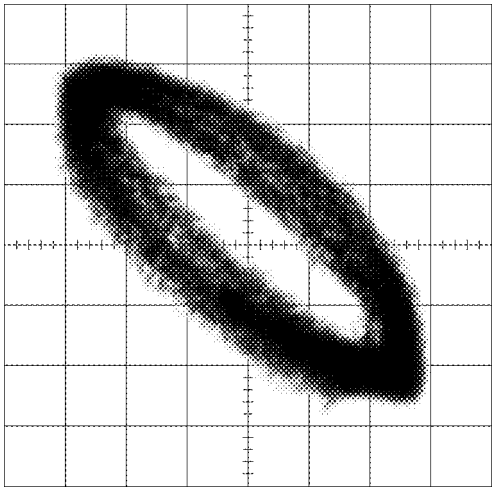

45°

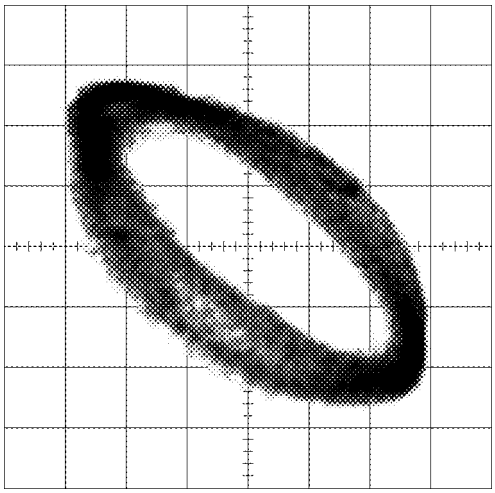

60°

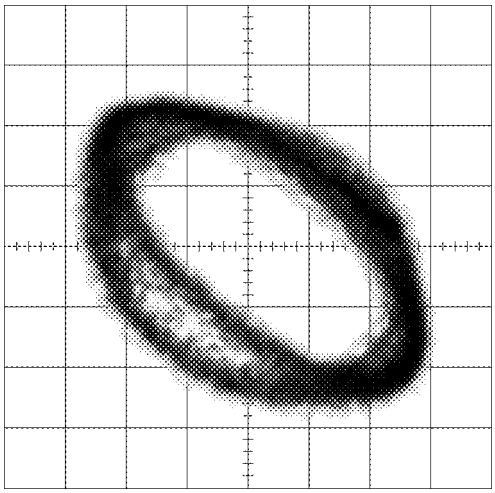

75°

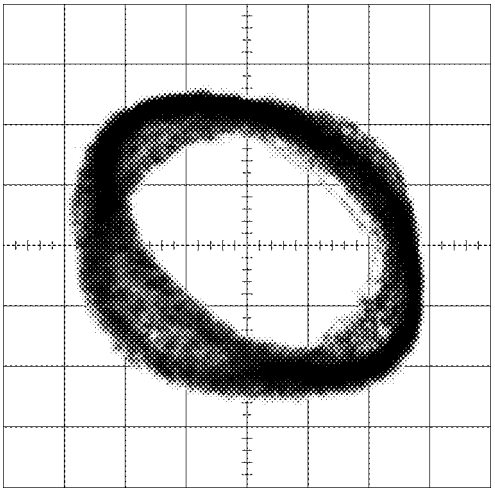

90°

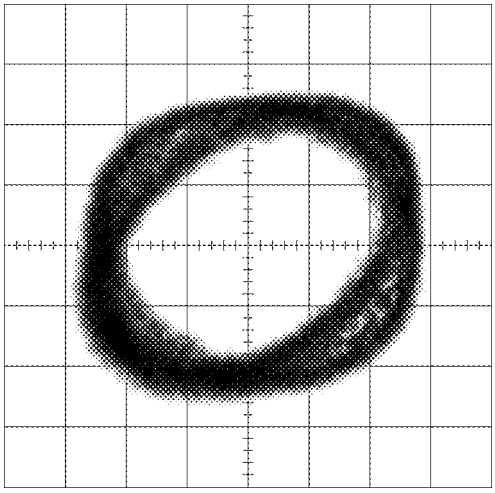

6.4 CD TEST MODE

● Error Messages

If a CD is not operative or stopped during operation due to an error, the error mode is turned on and cause(s) of the error is indicated with a corresponding number. This arrangement is intended at reducing nonsense calls from the users and also for facilitating trouble analysis and repair work in servicing.

(1) Basic Indication Method

1) When SERRORM is selected for the CSMOD (CD mode area for the system), error codes are written to DMIN (minutes display area) and DSEC (seconds display area). The same data is written to DMIN and DSEC. DTNO remains in blank as before.

2) Head unit display examples

Depending on display capability of LCD used, display will vary as shown below. xx contains the error number.

8-digit display	6-digit display	4-digit display
ERROR–xx	ERR–xx	E–xx

(2) Error Code List

Code	Class	Displayed error code	Description of the code and potential cause(s)
10	Electricity	Carriage Home NG SERVO LSI Communication Error	CRG can't be moved to inner diameter. CRG can't be moved from inner diameter. → Failure on home switch or CRG move mechanism. Communication error between microcomputer and SERVO LSI.
11	Electricity	Focus Servo NG	Focusing not available. → Stains on rear side of disc or excessive vibrations on REWRITABLE.
12	Electricity	Spindle Lock NG Subcode NG	Spindle not locked. Sub-code is strange (not readable). → Failure on spindle, stains or damages on disc, or excessive vibrations. A disc not containing CD-R data is found. Turned over disc are found, though rarely. CD signal error.
17	Electricity	Setup NG	AGC protection doesn't work. Focus can be easily lost. → Damages or stains on disc, or excessive vibrations on REWRITABLE.
30	Electricity	Search Time Out	Failed to reach target address. → CRG tracking error or damages on disc.
44	Electricity	ALL Skip	Skip setting for all track. (CD-R/RW)
50	Mechanism	CD On Mech Error	Mechanical error during CD ON. → Defective loading motor, mechanical lock and mechanical sensor.
A0	System	Power Supply NG	Power (VD) is ground faulted. → Failure on SW transistor or power supply (failure on connector).

Remarks: Mechanical errors are not displayed (because a CD is turned off in these errors).
Unreadable TOC does not constitute an error. An intended operation continues in this case.
Upper digits of an error code are subdivided as shown below:
1x: Setup relevant errors, 3x: Search relevant errors, Ax: Other errors.

● New Test Mode

S-CD plays the same way as before.

If an error such as off focus, spindle unlocking, unreadable sub-code, or sound skipping occurs after setup, its cause and time occurred (in absolute time) are displayed.

During setup, operational status of the control software is displayed.

These displays and functions are prepared for enhancing aging in the servicing and efficiency of trouble analysis.

(1) Shifting to the New Test Mode

① Turn on the current test mode by starting the reset from the key.

② Select S-CD for the source through the specified procedure including use of the [SOURCE] key, and inserting the disc. Then, press the [Jump Mode Selector] key while maintaining the regulator turned off.

③ After the above operations, the new test mode remains on irrespective of whether the S-CD is turned on or off. You can reset the new test mode by turning on the reset start.

(2) Key Correspondence

Key	Test mode		New test mode	
	Regulator Off	Regulator On	In-play	Error Production
BAND	To regulator on	To regulator off	–	Time/Err.No. switching
►	–	FWD-Kick	FF/TR+	–
◄	–	REV-Kick	REV/TR-	–
1	–	Tracking Close	Scan	–
2	–	Tracking Open	Mode	–
3	–	Focus Close	–	–
–	–	Focus Open	–	–
–	–	Jump Off	–	–
6	To new test mode	Jump mode switching	Auto/Manu	–

Note: Eject and CD on/off is performed in the same procedure as that for the normal mode.

(3) Cause of Error and Error Code

Code	Class	Contents	Description and cause
40	Electricity	Off focus detected.	FOK goes low. → Damages/stains on disc, vibrations or failure on servo.
41	Electricity	Spindle unlocked.	LOCK = Low continued for 150 msec. → Damages/stains on disc, vibrations or failure on servo.
42	Electricity	Sub-code unreadable.	Sub-code was unreadable for 500 msec. → Damages/stains on disc, vibrations or failure on servo.
43	Electricity	Sound skipping detected.	Last address memory function was activated. → Damages/stains on disc, vibrations or failure on servo.

Note: Mechanical errors during aging are not displayed.

(4) Display of Operational Status during Setup

Status No.	Contents	Protective action
21	Focus search start	Focus search timeout.
22	Focus search 2	Focus search timeout.
23	Focus search 3	Focus search timeout.
24	Focus search 4	Focus search timeout.
25	Focus search(Setup protection)	Focus slips off.
26	Focus search(Fast recovery)	Focus slips off.
27	RF detection	Focus slips off.
28	Spindle rough servocontrol	Focus slips off.
29	Tracking balance adjustment start	Focus slips off.
30	Tracking balance adjustment 2	Focus slips off.
31	Tracking balance adjustment 3	Focus slips off.
32	Tracking close start(Spindle stationary servocontrol setting)	Focus slips off.
33	Tracking close 2	Focus slips off.
34	Tracking close 3	Focus slips off.
35	Focus/Tracking AGC start	Focus slips off.
36	Focus/Tracking AGC 2	Focus slips off.
37	Focus/Tracking AGC 3	Focus slips off.
38	Focus/Tracking AGC 4	Focus slips off.
39	Focus/Tracking AGC 5	Focus slips off.
40	Focus/Tracking AGC 6	Focus slips off.
41	Focus/Tracking AGC 7	Focus slips off.
42	Focus/Tracking AGC 8	Focus slips off.
43	FE bias start	Focus slips off.
44	FE bias 2	Focus slips off.
45	RF AGC start	Focus slips off.
46	RF AGC 2	Focus slips off.
47	Lock check start	Focus slips off.
48	Lock is being checked	Focus slips off.
49	Subcode check start	Focus slips off, spindle lock is not performed.
50	Subcode is being checked	Focus slips off, no subcode can be read.

(5) Display Examples

1) During Setup

8-digit display, 6-digit display	4-digit display(Auto setting)	4-digit display(Manual setting)
TNO. Min Sec	TNO.	Min Sec
11 11' 11"	11	11' 11"

2) During Operation (TOC read, TRK search, Play, FF and REV)

The same as in the normal mode.

3) When a Protection Error Occurred

(A) Error display ((A)←→(B), (C) : BAND key)

8-digit display	6-digit display	4-digit display
ERROR-xx	ERR-xx	E-xx

(B) Error occurrence timing display in track no. ((B)←→(C) : Auto/Manual key)

8-digit display, 6-digit display	4-digit display(Auto setting)
TNO. Min Sec	TNO.
10 40' 05"	10

(C) Error occurrence timing display in absolute time. ((B)←→(C) : Auto/Manual key)

8-digit display, 6-digit display	4-digit display(Manual setting)
TNO. Min Sec	Min Sec
10 40' 05"	40' 05"

7. GENERAL INFORMATION

7.1 DIAGNOSIS

7.1.1 DISASSEMBLY

● Removing the Case (not shown)

1. Remove the Case.

● Removing the Grille Panel Assy (Fig.1)

1 Remove the two screws and then remove the Grille Panel Assy.

● Removing the CD Mechanism Module (Fig.1)

2 Remove the four screws and then remove the CD Mechanism Module.

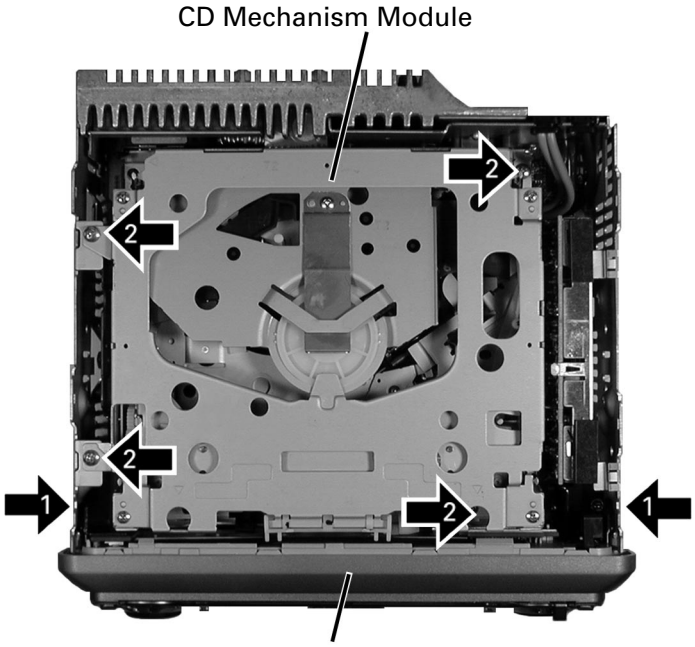

Fig.1

● Removing the Tuner Amp Unit (Fig.2)

1 Remove the two screws.

2 Remove the three screws.

3 Straight the tabs at three locations indicated.

4 Remove the screw and then remove the Tuner Amp Unit.

*) Tuner Amp Unit is different partially from this photo.

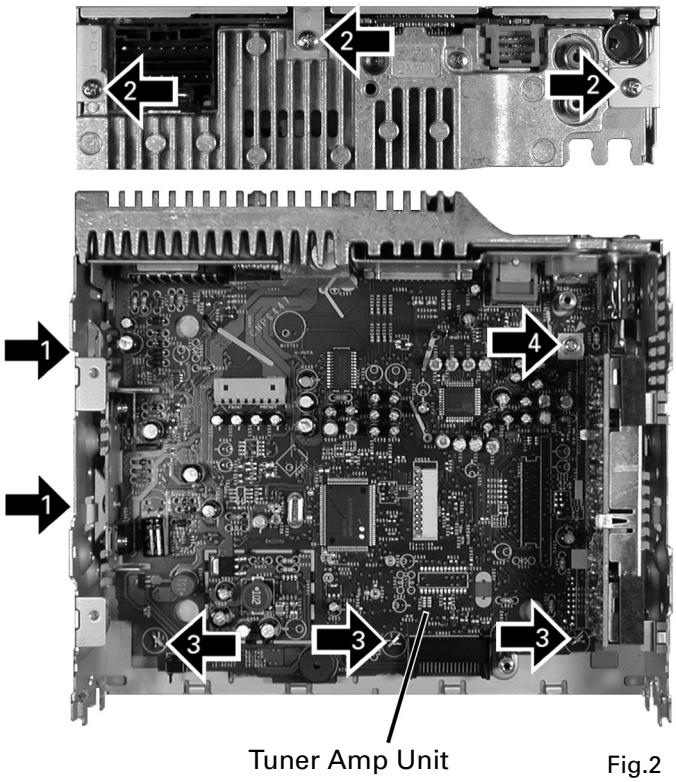

Fig.2

● Removing the OEL Unit

1. Apply hot air to the cable pins for the anode terminal using a blower used for removing a flat-packaged IC or something like that. When all the pins are peeling off from the PCB, pinch the cable with a pair of tweezers and remove it slowly from the PCB. (Fig.3)

* Be careful not to remove other electrical parts when you use a blower. Especially, when hot air is appropriated to the VR1902 too much, the volume will destroy.
* Flexible cable may not remove easily by transforming the Bosses by the hot air of the Blower.

2. Five tabs are extended until becoming straight in the direction of the arrow and then remove the Holder. (Fig.3)
3. Slowly set up the OEL Unit. At this time, the stress is prevented from hanging to flexible cable in the Cathode terminal. (Fig.4)
4. The Cathode terminal is removed according to the procedure same as the Anode terminal, and the OEL Unit is removed. (Fig.4)
5. Remove the Holder. (Remove after removing the Cathode terminal without fail.) (Fig.4)

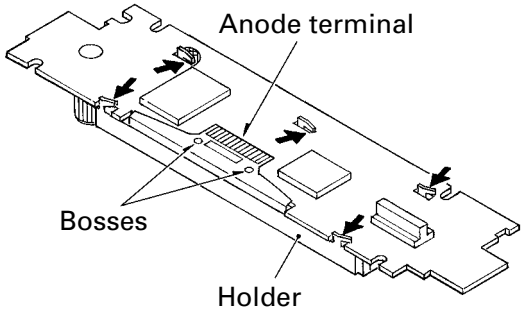

Fig.3

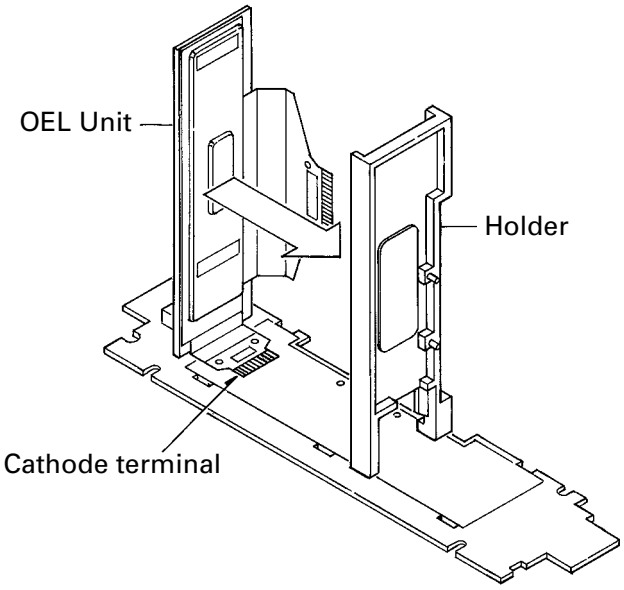

Fig.4

● Installing the OEL Unit

1. Install the Holder in the OEL Unit. (Fig.5)
2. When soldering the flexible cable for the Cathode terminal on the PCB, use a pair of tweezers. First, insert the tips of tweezers into 2 holes in the flexible cable, then into the 2 holes in the PCB. (Fig.5)
3. Position the flexible cable on the PCB so that their lands touch each other. (Fig.5)
4. Apply solder to each pin of the flexible cable. (Fig.5)

* Appropriate soldering iron lightly so that the stress should not hang to Flexible cable.

5. Lay down the OEL Unit. (Fig.5)
6. Install the Holder. (Fig.3)
7. When soldering the flexible cable for the Anode terminal on the PCB, first, insert the Bosses on the PCB into the 2 holes in the flexible cable. Then, take the same procedures 2 and 3 as that for the Cathode terminal to solder the cable pins. (Fig.3)

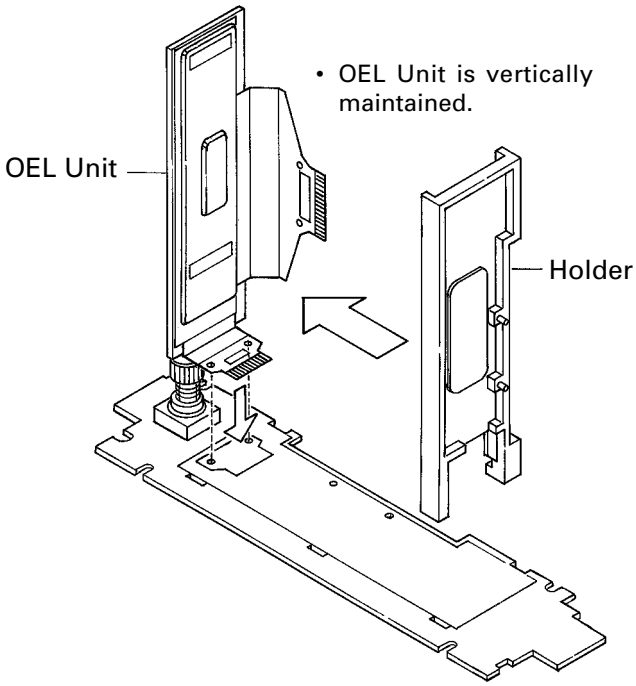

Fig.5

● How to hold the Mechanical Unit

1. Hold the top and bottom frame.
2. Do not squeeze top frame's front portion too tight, because it is fragile.

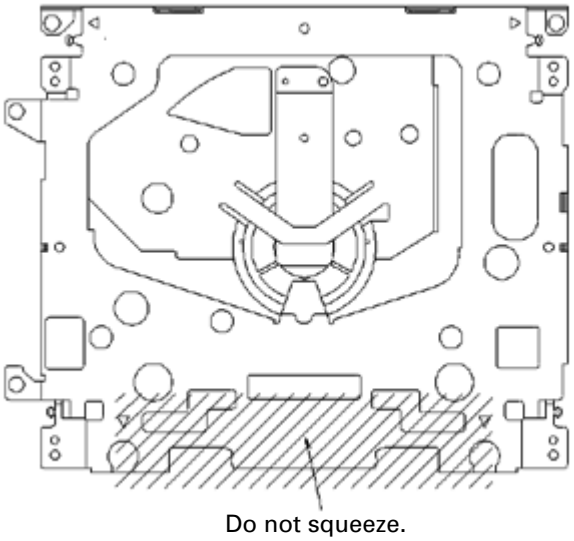

● How to remove the Top and Bottom Frame

1. When the disk is in "clamp" state, unlock Spring A (6 pieces) and Spring B (2 pieces), and unscrew screws (4 pieces).
2. Unlock each 1 of pawl at the both side of the frame, then remove the top frame.
3. Remove the Carriage Mechanical part in such way that; you remove the mechanical part from 3 pieces of Damper while slowly pulling up the part.
4. Now, the top frame has been removed, and under this state, fix the genuine Connector again, and eject the disk.
   (Caution)
   When you reassemble the Carriage Mechanical part, apply a bit of alcohol to Dampers.

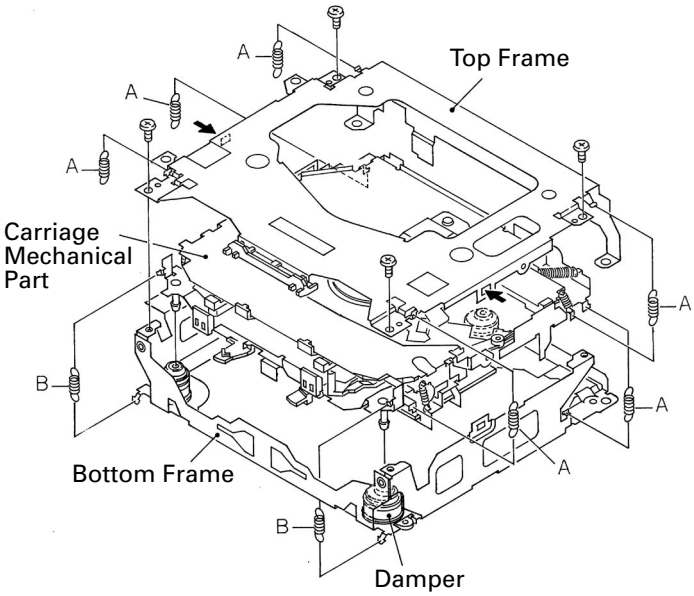

● How to remove the Guide Arm Assy

1. Unlock the spring (1 piece) at the right side of the assembly.
2. Unscrew screws (2 pieces), then remove the Screw Gear Bracket.
3. Shift the Guide Arm Assy to the left and slowly rotate it to the upper direction.
4. When the Guide Arm Assy rotates approximately 45 degree, shift the Assy to the right side direction and remove it.

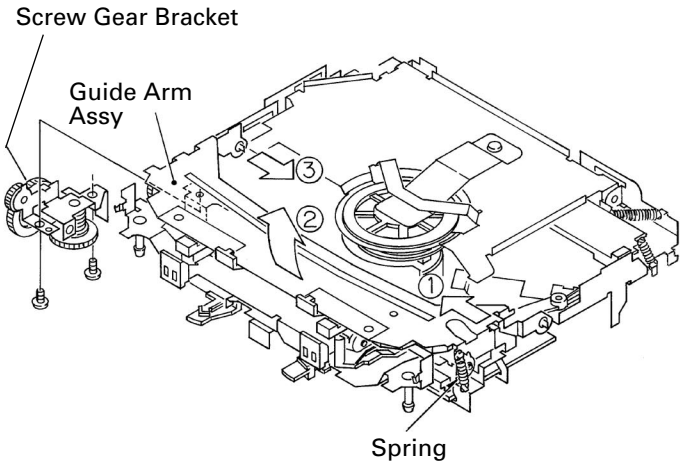

● How to remove the Control Unit

1. Give jumper-solder treatment to the Flexible Wire of the Pickup unit, then remove the wire from the Connector.
2. Remove all 4 points of solder-treatment on the Lead Wire. Also, unscrew the screw(1 piece).
3. Then, Remove the Control unit.
   (Caution)
   Be careful not to damage SW when you reassemble the Control Unit into the device.

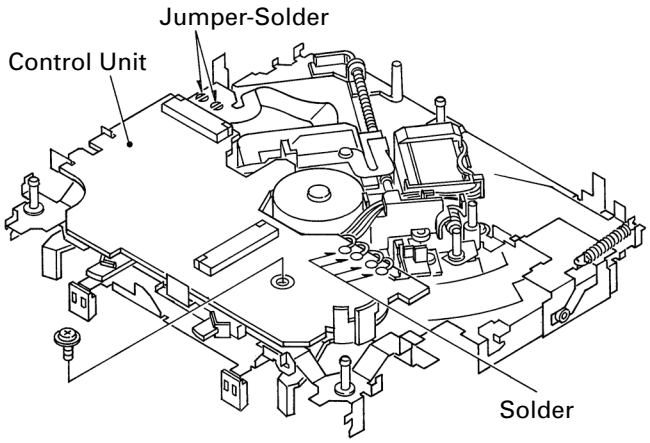

● How to remove the Loading Arm Assy

1. Unlock the spring (1 piece) and remove the E ring (1 piece) of the Fulcrum Shaft.
2. Shift the arm to the left side direction and unlock pins (2 pieces).

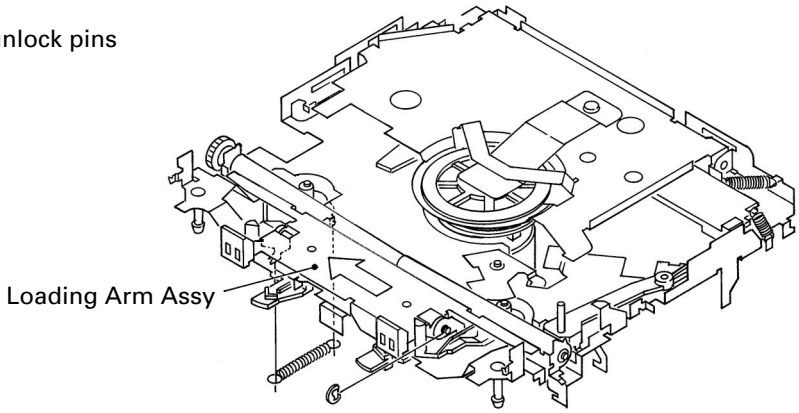

● How to remove the Pickup Unit

1. Unscrew 2 pieces of screws, then remove the Pulley Cover.
2. Remove the Feed Screw unit from the pawl of the Feed Screw Guide (The pawl is located inside the guide).
3. Remove the belt from the Pulley, then remove the Pickup unit.
   (Caution)
   Make sure not to stain the belt with grease when you fix the belt.

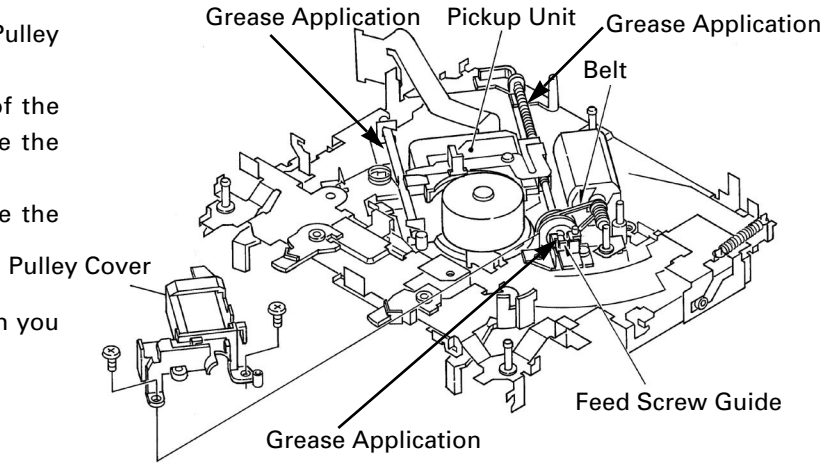

7.1.2 CONNECTOR FUNCTION DESCRIPTION

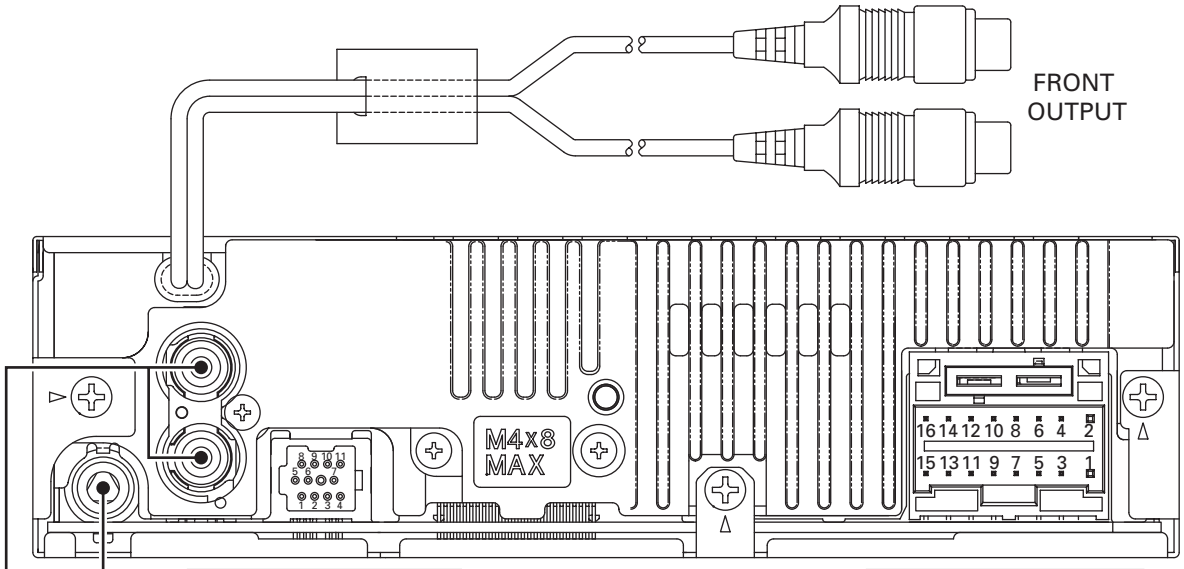

1. BUS+	7. BL+
2. GND	8. ASENB
3. GND	9. BR+
4. NC	10. BR-
5. BUS-	11. BL-
6. GND	

IP-BUS

1. GND	9. RL-
2. B.UP	10. FL-
3. ACC	11. RL+
4. NC	12. FL+
5. ILL	13. RR-
6. B.REM	14. FR-
7. NC	15. RR+
8. MUTE	16. FR+

POWER SUPPLY

7.2 IC

● **Pin Functions (PD5699A)**

Pin No.	Pin Name	I/O	Function and Operation
1	TUNPDO	O	TUNER:Data output(PLL)
2	TUNPCK	O	TUNER:Clock output(PLL)
3	EMUTE	O	EVOL:Mute output (Not used)
4	VST	O	EVOL:Strobe output
5	VDT	O	EVOL:Data output
6	NC		Not used
7	VCK	O	EVOL:Clock output
8	BYTE		Vss
9	CNVSS		Vss
10	TELIN	I	TEL:Telephone mute input
11	HTELPW	O	TEL:Microphone control output
12	RESET	I	Reset input(RESET)
13	XOUT		Clock output
14	VSS		Power supply input(Vss)
15	XIN		Clock input
16	VCC		Power supply input(Vcc)
17	NC		Not used(Vcc)(Pull up)
18,19	NC		Not used
20	DALMON	O	DFS alarm output
21	RX2	I	IPBUS:Input 2
22	OELPW	O	OEL power supply output
23	SYSPW	O	System power control output
24	PEE	O	Beep tone output
25	NC		Not used
26	ROMCS	O	External ROM:Chip select output
27	ROMCK	O	External ROM:Clock output
28	ROMDATA	I/O	External ROM:Data input / output
29	RX	I	IPBUS:Data input
30	TX	O	IPBUS:Data output
31-33	NC		Not used
34	VDCONT	O	CD:VD power supply control output
35	DPDT	O	GRILLE:Display data output
36	KYDT	I	GRILLE:Key data input
37, 38	ROT1, 0	I	Rotary encoder pulse input 1, 0
39	PCL	O	Clock adjustment output
40	SWVDD	O	GRILLE:Chip enable output
41	DSENS	I	Detach sense input
42	FLPILM	O	Inside of flap illumination output
43	ILMPW	O	Illumination output
44	EJTIN	I	EJECT key input
45-47	NC		Not used
48	AM/FM	O	TUNER:Decoder power supply control output
49	ST	I	TUNER:Stereo input
50	SD	I	TUNER:SD input
51-57	NC		Not used
58	CONT	O	CD:Servo driver control output
59-61	XPIO3-1	I/O	CD:LSI data input/output 3-1
62	VCC		Power supply input(Vcc)
63	XPIO0	I/O	CD:LSI data input/output 0
64	VSS		Power supply input(Vss)
65	CDLOEJ	O	CD:Load Motor Load/Eject output
66	CLCONT	O	CD:Driver input switch output
67	NC		Not used
68	CD5VON	O	CD:Power supply control output
69	HOME	I	CD:CRG HOME detection input
70	HTELM	O	TEL:Mute output for handsfree (Not used)
71	TUNPCE2	O	TUNER:Chip enable output(EEPROM)

Pin No.	Pin Name	I/O	Function and Operation
72	TUNPCE	O	TUNER:Chip enable output(PLL)
73	BSENS	I	Backup sense
74	ASENS	I	ACC sense
75	NC		Not used
76	LOCH	O	TUNER:Local H output
77	LOCL	O	TUNER:Local L output
78	XPCK	O	CD:LSI clock output
79	XCE	O	CD:LSI chip enable output
80	XRST	O	CD:LSI reset output
81	IPPW	O	IPBUS:Driver power supply control output
82	ASENBO	O	IPBUS:Slave ACC sense output
83	ISENS	I	Illumination sense input
84, 85	MODEL1, 0	I	Model input 1, 0
86	NC		Not used
87	MUTE	O	Mute output
88	TESTIN	I	Test program input
89	DSCSNS	I	CD:Disc position detection input
90	VDSENS	I	CD:VD power supply sense input
91	TEMP	I	CD:Temperature sense input
92	LVLINR	I	Level indicator R ch input
93	CSENS	I	Flap open/close sense input
94	LVLINL	I	Level indicator L ch input
95	NC		Not used
96	AVSS		AD converter power supply input(Vss)
97	SL	I	TUNER:Signal level input
98	VREF		AD converter reference voltage(Vref)
99	AVCC		AD converter power supply input(Vcc)
100	TUNPDI	I	TUNER:Data input

*PD5699A

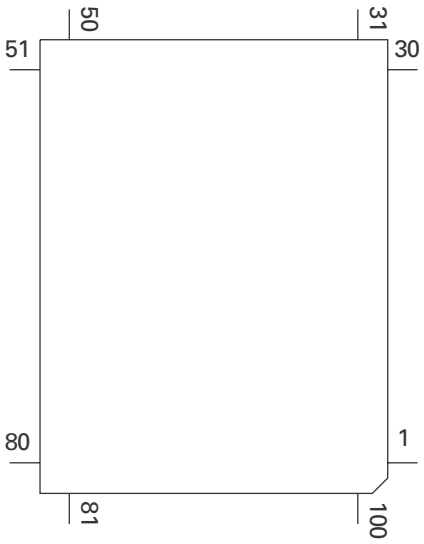

IC's marked by * are MOS type.
Be careful in handling them because they are very liable to be damaged by electrostatic induction.

PAL007A

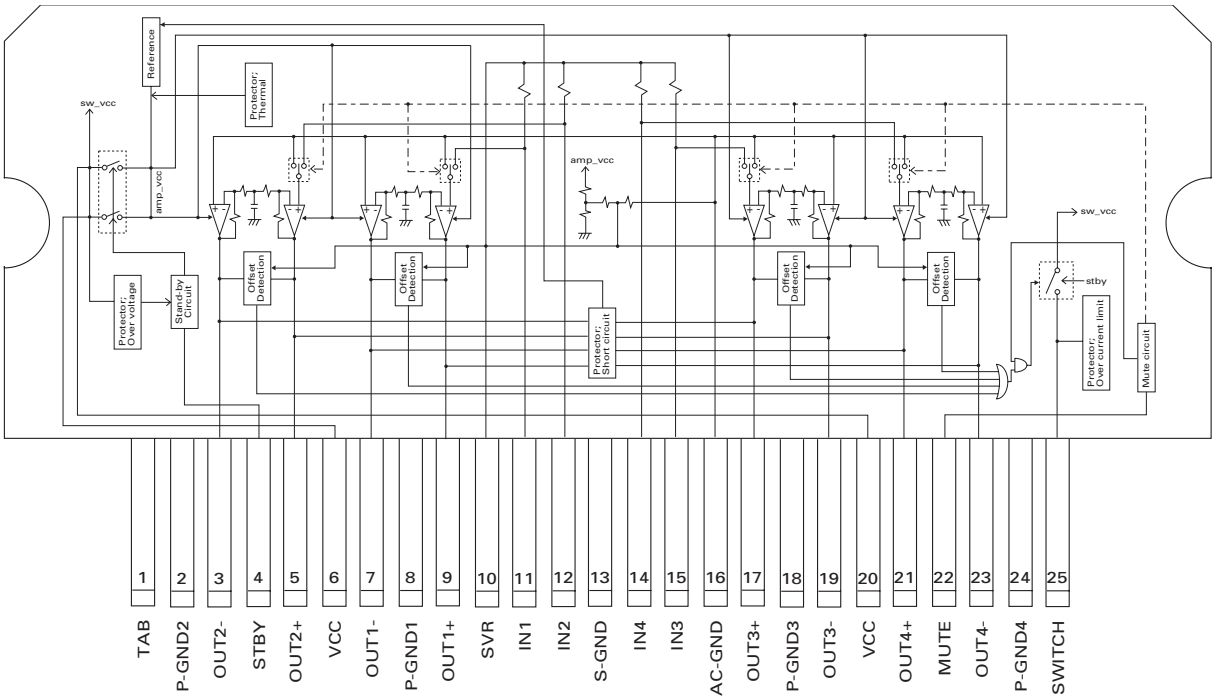

PML009A(DEH-P640/XN/UC)

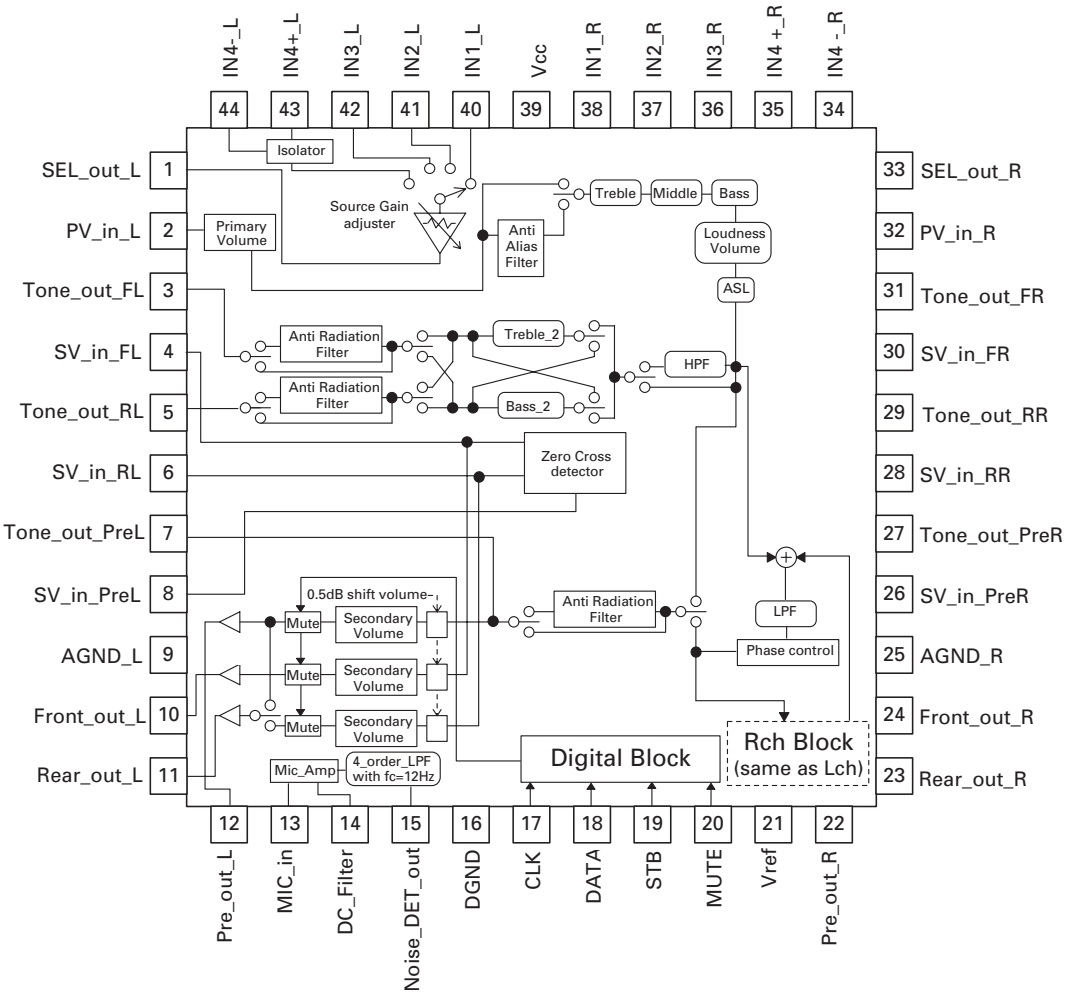

● **Pin Functions (PD5706A)**

Pin No.	Pin Name	I/O	Function and Operation
1-4	NC		Not used OPEN
5	REM	I	Remote control reception input
6	BYTE	I	GND connection
7	CNVSS	I	GND connection
8, 9	NC		Not used OPEN
10	$\overline{\text{RESET}}$		Pull up
11	XOUT	O	Crystal oscillating element connection pin
12	VSS		VSS connection
13	XIN	I	Crystal oscillating element connection pin
14	VCC		VCC connection
15	$\overline{\text{NMI}}$	I	NVI input (Not used)
16-19	$\overline{\text{KD1}}$-$\overline{\text{KD2}}$	I	Key data 1-4 input
20	CKC	O	Fixed pulse output for cathode driver
21	NC		Not used
22	CKA	O	Fixed pulse output for anode driver
23	NC		Not used
24	LS	O	Line sink signal output
25	NC		Not used
26	CKD	O	Data transport / driver clock output
27	DPDT	I	Display data input
28	KYDT	O	Key data output
29	DA2	O	Display data MSB output
30	NC		Not used
31	CLK1	I	Clock input for UART1
32	ILMD	O	Dual illumination select output
33	DA1	O	Display data LSB output
34	NC		Not used
35	CLK0	I	Clock input for UART0 input
36	NC		Not used
37	$\overline{\text{RDY}}$	I	Not used
38	NC		Not used
39	$\overline{\text{HOLD}}$	I	Not used
40,41	NC		Not used
42	$\overline{\text{RD}}$	O	Read strobe output
43-46	NC		Not used
47	$\overline{\text{CS1}}$	O	Bank address select output
48	$\overline{\text{CS0}}$	O	External ROM chip select output
49	A19	O	Address bus 19 output
50	A18	O	Address bus 18 output (Not used)
51-59	A17-A9	O	Address bus 17-9 output
60	VCC		VCC connection
61	A8	O	Address bus 8 output
62	VSS		GND connection
63-69	A7-A1	O	Address bus 7-1 output
70	A0	O	Address bus 0 output (Not used)
71-86	D15-D0	I/O	Data bus 15-0 input / output
87-92	$\overline{\text{KS1}}$-$\overline{\text{KS6}}$	I/O	Key strobe input / output
93	NC		Not used
94	AVSS		GND connection
95	NC		Not used OPEN
96	VREF		Not used VSS connection
97	AVCC		Not used VCC connection
98-100	NC		Not used OPEN

*PD5706A

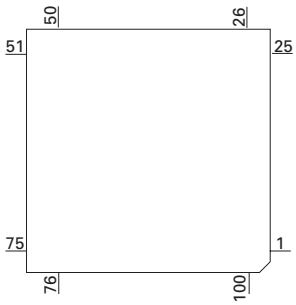

*S-818A33AUC-BGN

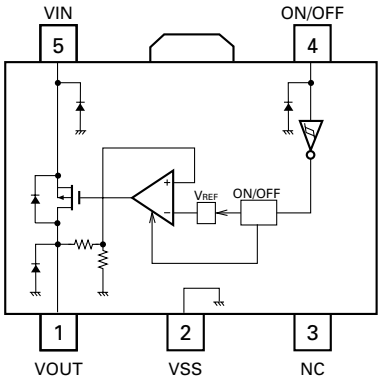

*PD8088A(DEH-P6400/XN/UC, P6450/XN/ES)
*PD8089A(DEH-P640/XN/UC)

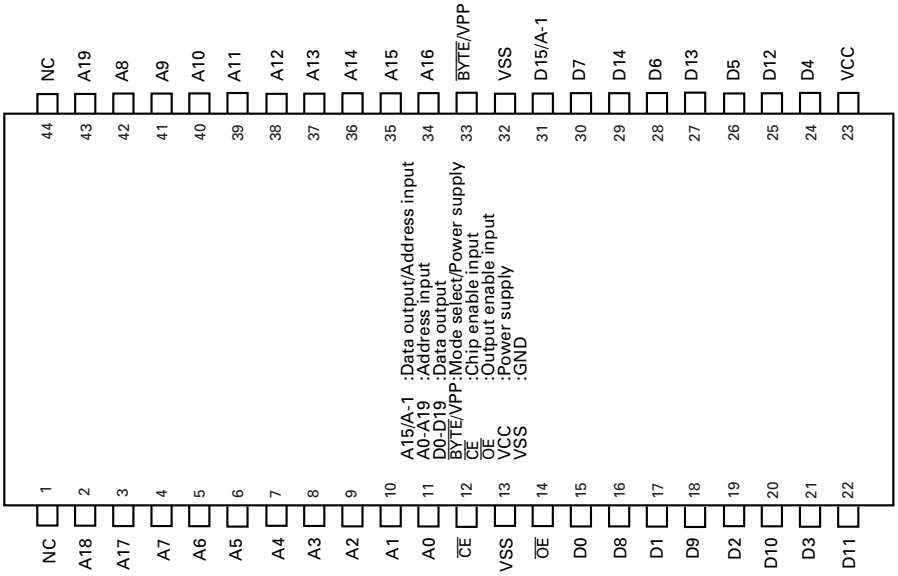

PML008A(DEH-P6400/XN/UC, P6450/XN/ES)

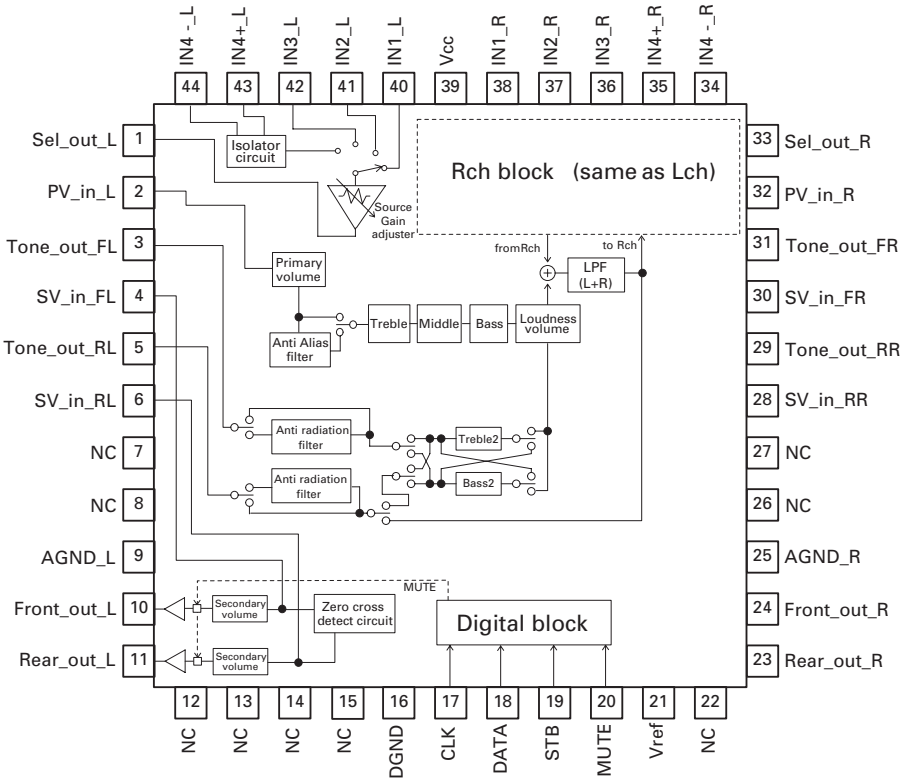

*TSOP1840SB3V

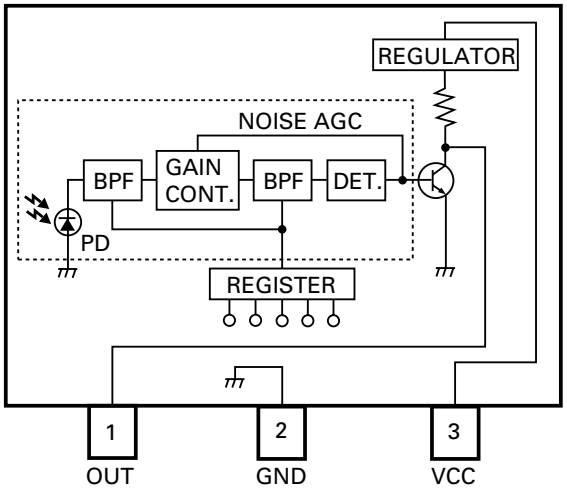

*PDH0047A(DEH-P6400/XN/UC, DEH-P6450/XN/ES)

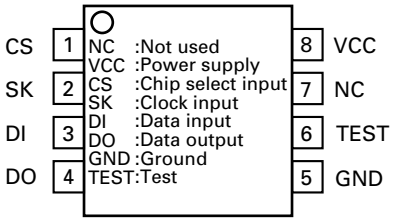

● **Pin Functions(TA2153FN)**

Pin No.	Pin Name	I/O	Function and Operation
1	VCC		Power supply voltage terminal
2	RFGC	I	RF amplitude adjustment control signal terminal
3	GMAD	I	AGC amplifier frequency characteristic adjustment terminal
4	FNI	I	Main beam amplifier input terminal
5	FPI	I	Main beam amplifier input terminal
6	TPI	I	Sub beam amplifier input terminal
7	TNI	I	Sub beam amplifier input terminal
8	MDI	O	Monitor photodiode amplifier input terminal
9	LDO	I	Laser diode amplifier output terminal
10	SEL	I	APC circuit ON/OFF signal, LDO terminal control input terminal and bottom and peak detection frequency switching terminals
11	TEB	I	Tracking error balance adjustment signal input terminal
12	2VRO	O	Reference voltage (2VRO) output terminal
13	TEN	I	Tracking error signal generation amplifier reverse phase input terminal
14	TEO	O	Tracking error signal generation amplifier output terminal
15	SBAD	O	Sub beam addition signal output terminal
16	FEO	O	Focus error signal generation amplifier output terminal
17	FEN	I	Focus error signal generation amplifier reverse phase input terminal
18	SEB	I	RFRP generation circuit mode switching terminal
19	VRO	O	Reference voltage (VREF) output terminal
20	RFRP	O	Signal generation amplifier output terminal for track count
21	BTC	I	Bottom detection time constant adjustment terminal for RFCT signal generation
22	RFCT	O	RFRP signal center level output terminal
23	PKC	I	Peak detection time constant adjustment signal for RFCT signal generation
24	RFRPIN	I	Signal generation amplifier input terminal for track count
25	RFGO	O	RF signal amplitude adjustment amplifier output terminal
26	GVSW	I	AGC, FE or TE amplifier gain switching terminal
27	AGCIN	I	RF signal amplitude adjustment amplifier input terminal
28	RFO	O	RF signal generation amplifier output terminal
29	GND	I	GND terminal
30	RFN2	I	RF signal generation amplifier input terminal

TA2153FN

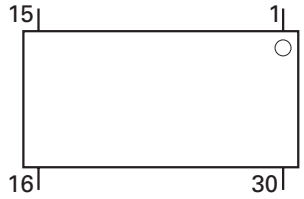

● **Pin Functions(TC9495F2)**

Pin No.	Pin Name	I/O	Function and Operation
1	TESTO		Test mode terminal
2	$\overline{\text{HSO}}$	O	Replay speed flag output terminal
3	$\overline{\text{UHSO}}$	O	Replay speed flag output terminal
4	EMPH	O	Emphasis flag output terminal for sub code Q data
5	LRCK	O	Channel clock (44.1 kHz) output terminal
6	VSS		Digital ground terminal
7	BCK	O	Bit clock output terminal
8	AOUT	O	Digital audio data output terminal
9	DOUT	O	Digital out output terminal
10	MBOV	O	Buffer memory over signal output terminal
11	IPF	O	Correction flag output terminal
12	SBOK	O	CRCC decision result output for sub code Q data
13	CLCK	I/O	Clock input/output terminal for sub code P-W data read
14	VDD		Digital + power supply terminal (5 V)
15	VSS		Digital ground terminal
16	DATA	O	Sub code P-W data output terminal
17	SFSY	O	Replay-system frame sync signal output terminal
18	SBSY	O	Sub code block sync output terminal
19	SPCK	O	Clock for processor status signal read
20	SPDA	O	Processor status signal output terminal
21	COFS	O	Correction-system frame clock (7.35 kHz) output terminal
22	MONIT	O	LSI internal signal output terminal
23	VDD		Digital + power supply terminal (5 V)
24	TESIO0	I	Test input/output terminal
25	P2VREF		PLL-system only 2VREF terminal
26	HSSW	O	The VREF voltage is reached for double or quad speed.
27	ZDET	O	One-bit DAC zero detection flag output terminal
28	PDO	O	Phase error signal issue between the EFM and PLCK signals
29	TMAXS	O	TMAX detection result output terminal
30	TAMX	O	TMAX detection result output terminal
31	LPFN	I	Reverse input terminal of amplifier for lowpass filter
32	LPFO	O	Output terminal of amplifier for lowpass filter
33	PVREF		PLL-system only VREF terminal
34	VCOREF	I	VCO center frequency reference level terminal
35	VCOF	O	Filter terminal for VCO
36	AVSS		Analog-system ground terminal
37	SLCO	O	Output terminal of DAC for data slice level generation
38	RFI	I	RF signal input terminal
39	AVDD		Analog-system power supply terminal (5 V)
40	RFCT	I	RFRP signal center level input terminal
41	RFZI	I	Input terminal for RFRP signal zero cross
42	RFRP	I	RF ripple signal input terminal
43	FEI	I	Focus error signal input terminal
44	SBAD	I	Sub beam addition signal input terminal
45	TSIN	I	Test input terminal
46	TEI	I	Tracking error input terminal
47	TEZI	I	Input terminal for tracking error or zero cross
48	FOO	O	Focus equalizer output terminal
49	TRO	O	Tracking equalizer output terminal
50	VREF		Analog reference power supply terminal
51	RFGC	O	RF amplitude adjustment control signal output terminal
52	TEBC	O	Tracking balance control signal output terminal
53	FMO	O	Feed equalizer output terminal
54	FVO	O	Speed error signal or feed search EQ output
55	DMO	O	Disc equalizer output terminal
56	2VREF		Analog reference power supply terminal
57	SEL	O	APC circuit ON/OFF signal output terminal

Pin No.	Pin Name	I/O	Function and Operation
58-61	FLGA-D	O	External flag output terminal for internal signal monitor
62	VDD		Digital + power supply terminal (5 V)
63	VSS		Digital ground terminal
64	IO0	O	RF amplifier gain switching terminal
65	IO1	O	Not used
66	IO2	I	HOME detection switch input terminal
67	IO3	O	FocusDrv and signal output terminal
68	$\overline{\text{DMOUT}}$	I	Field equalizer PWM output terminal for IO0 and IO1 Disc equalizer PWM output terminal for IO2 and IO3
69	$\overline{\text{CKSE}}$	I	Usually open
70	$\overline{\text{DACT}}$	I	DAC test mode terminal
71	TESIN	I	Test input terminal
72	TESIO1	I	Test input/output terminal
73	VSS		Digital ground terminal
74	PXI	I	DPS-system clock oscillator circuit input terminal
75	PXO	O	DPS-system clock oscillator circuit output terminal
76	VDD		Digital + power supply terminal (5 V)
77	XVSS		Ground terminal for system clock oscillator circuit
78	XI	I	System clock oscillator circuit input terminal
79	XO	O	System clock oscillator circuit output terminal
80	XVDD		For system clock oscillator circuit + power supply terminal
81	DVSR		R channel D/A converting unit power supply terminal
82	RO	O	R channel data forward rotation output terminal
83	DVDD		D/A converting unit power supply terminal (5 V)
84	DVR		Reference voltage terminal
85	LO	O	L channel forward rotation output terminal
86	DVSL		L channel D/A converting unit power supply terminal
87-89	TEST1-3	I	Test mode terminal
90-93	BUS0-3	I/O	Data input/output terminal for microcomputer interface
94	VDD		Digital + power supply terminal (5 V)
95	VSS		Digital ground terminal
96	BUCK	I	Clock terminal for microcomputer interface
97	$\overline{\text{CEE}}$	I	Chip enable signal for microcomputer interface
98	TEST4	I	Test mode terminal
99	$\overline{\text{TSMOD}}$	I	Test mode terminal
100	$\overline{\text{RST}}$	I	Reset signal input terminal

*TC9495F2

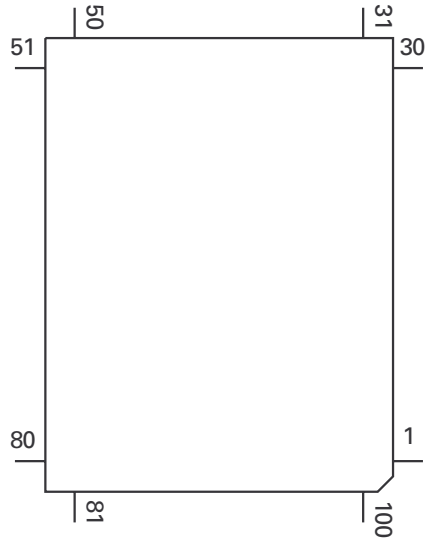

● Pin Functions(BA5996FM)

Pin No.	Pin Name	Function and Operation
1	VR	Input pin for reference voltage
2	OPIN2(+)	Input pin for non-inverting input for CH2 preamplifier
3	OPIN2(-)	Input pin for inverting input for CH2 preamplifier
4	OPOUT2	Output pin for CH2 preamplifier
5	OPIN1(+)	Input pin for non-inverting input for CH1 preamplifier
6	OPIN1(-)	Input pin for inverting input from CH1 preamplifier
7	OPOUT1	Output pin for CH1 preamplifier
8	GND	Ground pin
9	MUTE	Mute control pin
10	POWVCC1	Power supply pin for CH1, CH2, and CH3 at "Power" stage
11	VO1(-)	Driver CH1 - Negative output
12	VO1(+)	Driver CH2 - Positive output
13	VO2(-)	Driver CH2 - Negative output
14	VO2(+)	Driver CH2 - Positive output
15	VO3(+)	Driver CH2 - Positive output
16	VO3(-)	Driver CH2 - Negative output
17	VO4(+)	Driver CH4 - Positive output
18	VO4(-)	Driver CH4 - Negative output
19	POWVCC2	Power supply pin for CH4 at "Power" stage
20	GND	Ground pin
21	CNT	Control pin
22	LDIN	Loading input
23	OPOUTSL	Output pin for preamplifier for thread
24	OPINSL	Input pin for preamplifier for thread
25	OPOUT3	CH3 preamplifier output pin
26	OPIN3(-)	Input pin for inverting input for CH3 preamplifier
27	OPIN3(+)	Input pin for non-inverting input for CH3 preamplifier
28	PREVCC	PreVcc

BA5996FM

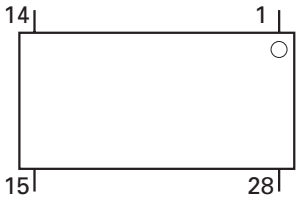

● FM/AM Tuner Unit

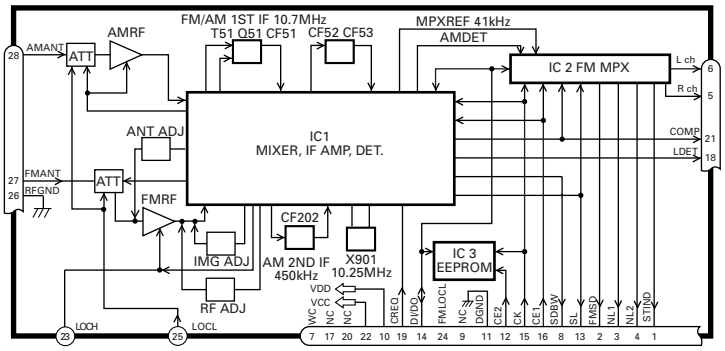

No.	Symbol	I/O	Explain	
1	STIND	O	stereo indicator	"Low" when the FM stereo signals are received. To be pulled up to the "VDD" at 47kΩ.
2	FMSD	O	FM station detector	"High" when signals are received. To be pulled up to the "VDD" at 47kΩ Meanwhile, 10kΩ should be used when taking diver FIX trigger from here and "High: 0.9VDD or more" and "Low: 250mV or less". (Should satisfy the diver IC specifications)
3	NL1	O	noise level-1	"High" when noise is received. Output for the RDS. GND at 47kΩ //1,800pF.
4	NL2	O	noise level-2	"High" when noise is received. Output for the RDS. GND at 36kΩ //330pF.
5	Rch	O	R channel output	FM stereo "R-ch" signal output or AM audio output. Add the specified de-emphasis constant.
6	Lch	O	L channel output	FM stereo "L-ch" signal output or AM audio output. Add the specified de-emphasis constant.
7	WC		write control	EEPROM write control. Writing permissible at "Low". Normally open.
8	SDBW	O	SD bandwidth	SD bandwidth signal output. For detection of detuning data for the RDS.
9	NC			Not used
10	VDD		power supply	Power supply pin for the digital section. DC 5V +/- 0.25V. Be careful about overlapping noise in the logic section.
11	DGND		digital ground	Grounding for the digital section.
12	CE2	I	chip enable-2	EEPROM chip enable. Active a "Low" To be pulled up to the "VDD" at 47kΩ
13	SL	I/O	signal level	Received FM/AM signal level (strength) output. Connect the specified load resistor and capacitor (10k Ω + 39k Ω //4,700pF)
14	DI/DO	I/O	data input/ data output	Data input/Data output To be pulled up to the "VDD" at 47kΩ
15	CK	I	clock	Clock input To be pulled up to the "VDD" at 47kΩ
16	CE1	I	chip enable-1	AF·RF chip enable. Active at "High" To be grounded at 47kΩ
17	NC			Not used
18	LDET	O	lock detector	Active at "Low". To be pulled up to the "VDD" at 47kΩ
19	CREQ	I	current request	Active at "Low". To be grounded at 47kΩ
20	NC			Not used
21	COMP	O	composite signal	FM composite signal output. r out < 100Ω
22	VCC		power supply	Analog section power supply pin.DC 8.4V +/- 0.3V
23	LOCH	I	local high	FM local high pin. When seeking local high, apply 5V together with "LOCL".
24	FMLOCL	I	FM local low	FM local low pin. When seeking local low, apply 5V to the base of the NPN transistor with which the specified resistor is being connected to the emitter. Keep it open in case of ordinary marketed models.
25	LOCL	I	local low	FM/AM local low pin. When seeking local low, apply 5V to the base of the NPN transistor. Since this pin is exclusive for AM when the FMLOCL is in use, do not drive it under FM.
26	RFGND		RF ground	Grounding for the antenna section.
27	FMANT	I	FM antenna input	FM antenna input. 75Ω. Surge absorber (DSP-201M-S00B) is necessary.
28	AMANT	I	AM antenna input	AM antenna input. High impedance. Connect to the antenna through an L (LAU type) of 4.7μH.To cope with the power transmission line hums, insert a series circuit consisting of an L (a coil of about 100mH) + R (a resistor of 470 Ω to 2.2kΩ) between the GND.

7.3 OPERATIONAL FLOW CHART

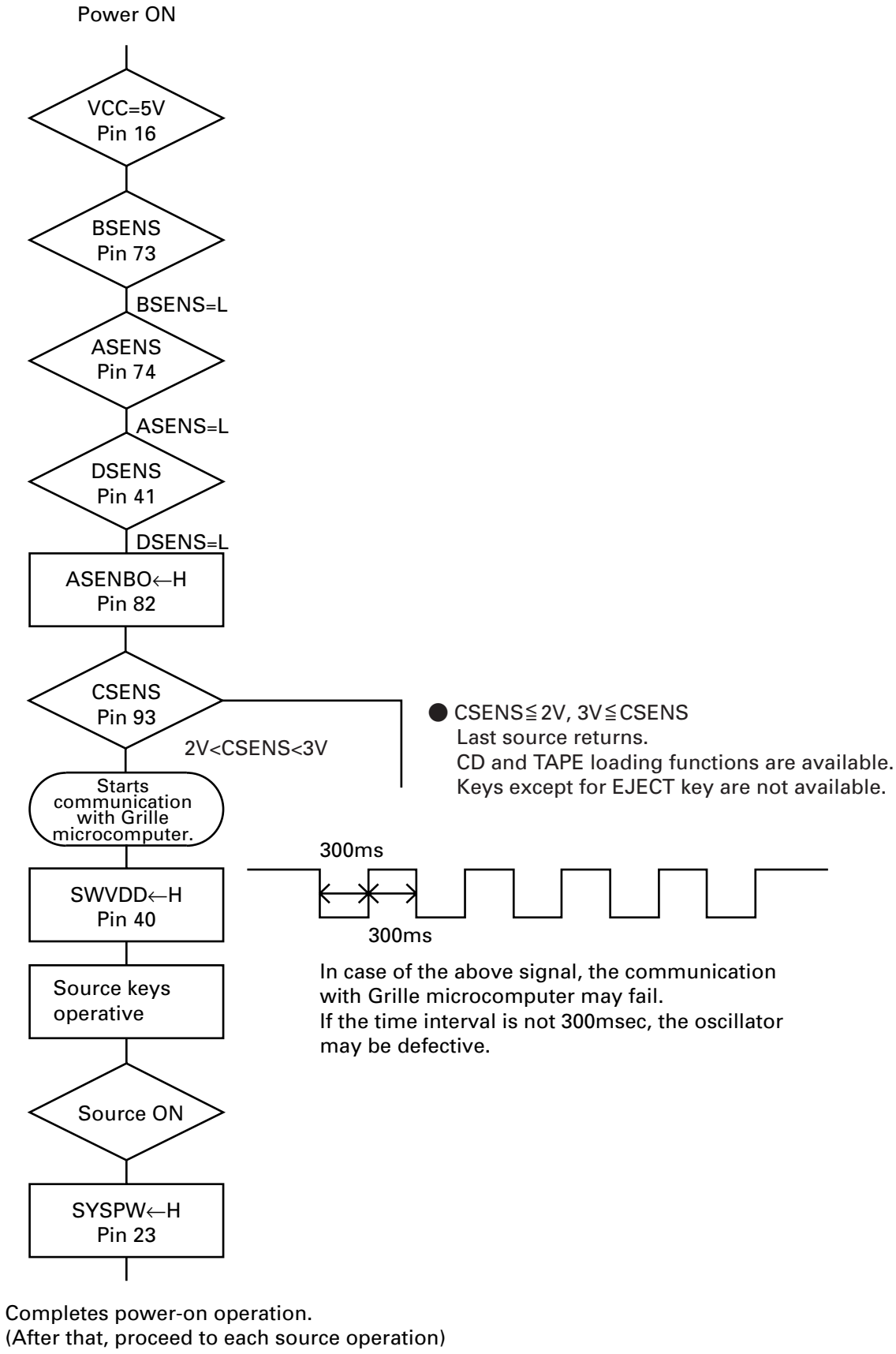

Completes power-on operation.
(After that, proceed to each source operation)

7.4 CLEANING

Before shipping out the product, be sure to clean the following portions by using the prescribed cleaning tools:

Portions to be cleaned	Cleaning tools
CD pickup lenses	Cleaning liquid : GEM1004 Cleaning paper : GED-008

8. OPERATIONS AND SPECIFICATIONS

8.1 OPERATIONS

HEAD UNIT

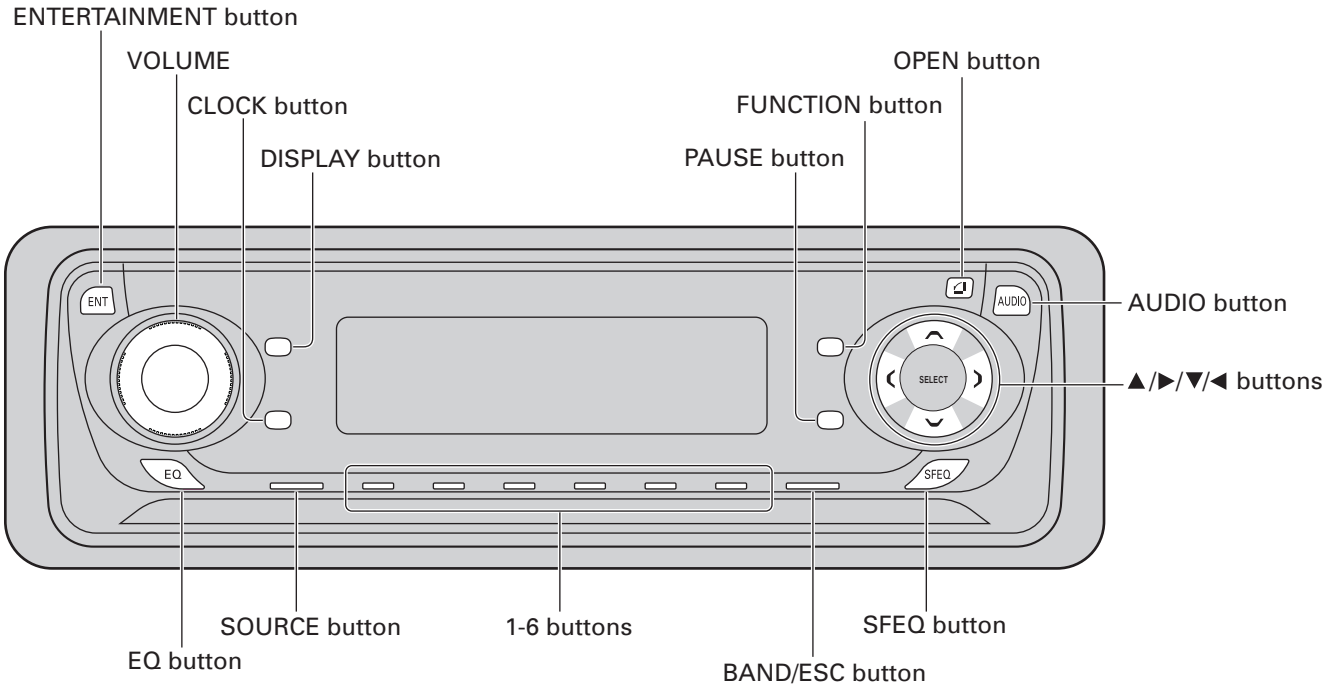

REMOTE CONTROL UNIT

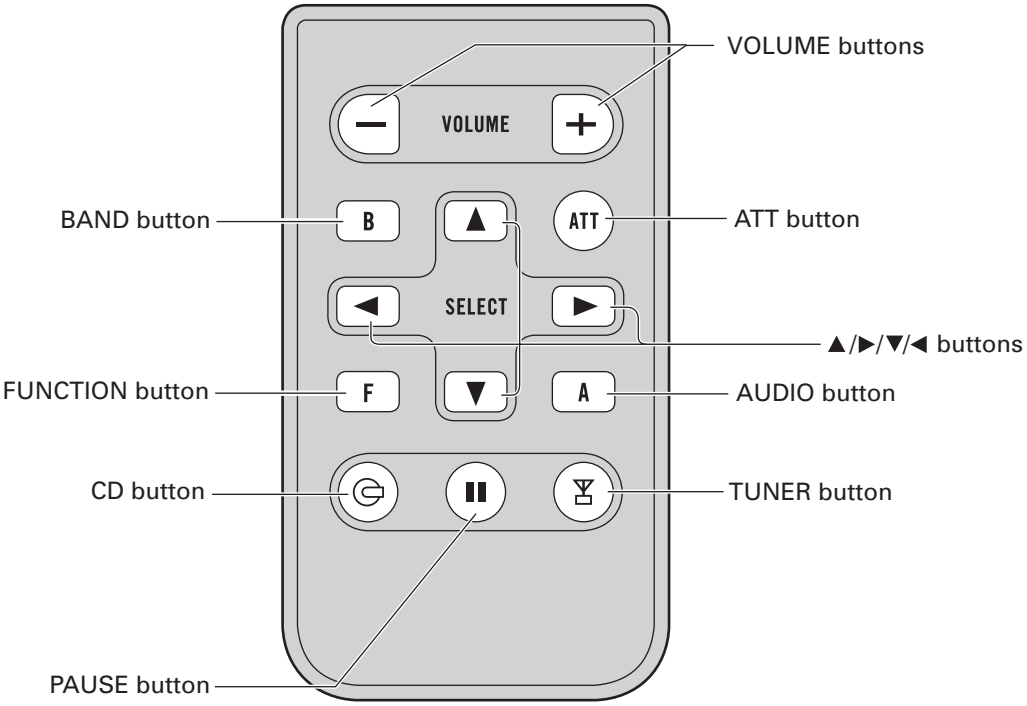

● CONNECTION DIAGRAM

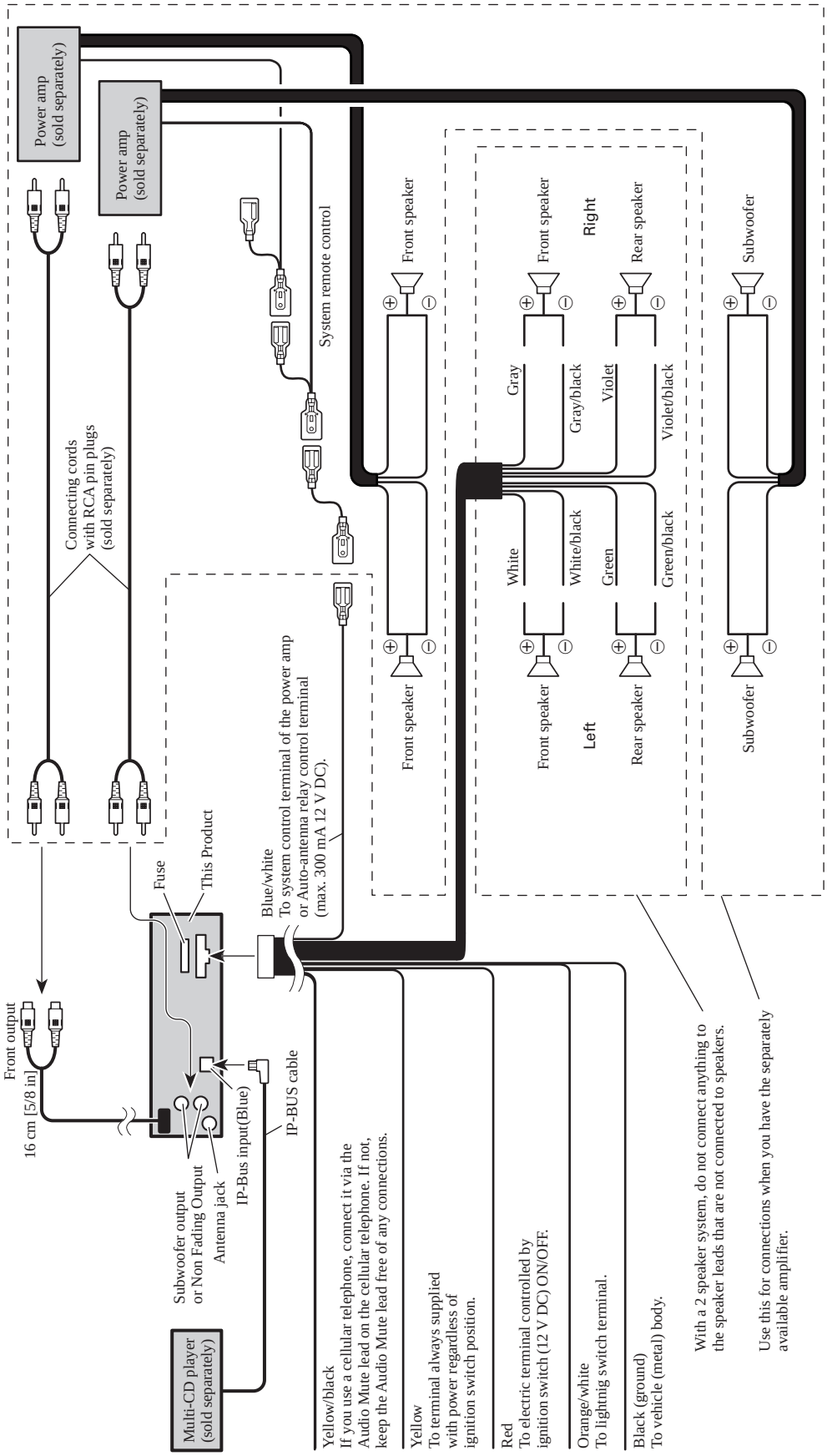

8.2 SPECIFICATIONS

● DEH-P640/XN/UC, P6400/XN/UC

General

Power source ..... 14.4 V DC
(10.8 – 15.1 V allowable)
Grounding system ..... Negative type
Max. current consumption
..... 10.0 A
Backup current ..... 5 mA or less
Dimensions (W x H x D):
(DIN).....Chassis 178 x 50 x 157 mm
[7 x 2 x 6-1/8 in]
Nose ..... 188 x 58 x 19 mm
[7-3/8 x 2-1/4 x 3/4 in]
(D) Chassis ..... 178 x 50 x 162 mm
[7 x 2 x 6-3/8 in]
Nose ..... 170 x 46 x 14 mm
[6-3/4 x 1-3/4 x 1/2 in]
Weight ..... 1.4 kg

Audio

Continuous power output is 22 W per channel min. into 4 ohms, both channels driven 50 to 15,000 Hz with no more than 5% THD.
Maximum power output 50 W x 4
for subwoofer (70 W x 1 ch/2 Ω)
Load impedance ..... 4 Ω (4 – 8 Ω [2 Ω for 1 ch] allowable)
Preout max output level/output impedance
..... 2.2 V/1 kΩ
Equalizer (3-Band Parametric Equalizer):
(Low)
Frequency ..... 40/80/100/160 Hz
Q Factor 0.35/0.59/0.95/1.15
(+6 dB when boosted)
Gain ..... ±12 dB
(Mid)
Frequency ..... 200/500/1 k/2 k Hz
Q Factor 0.35/0.59/0.95/1.15
(+6 dB when boosted)
Gain ..... ±12 dB
(High)
Frequency ..... 3.15 k/8 k/10 k/12.5 k Hz
Q Factor 0.35/0.59/0.95/1.15
(+6 dB when boosted)
Gain ..... ±12 dB
Loudness contour:
(Low) ..... +3.5 dB (100 Hz)
+3 dB (10 kHz)
(Mid) ..... +10 dB (100 Hz)
+6.5 dB (10 kHz)
(High) ..... +11 dB (100 Hz)
+11 dB (10 kHz)
(Volume: –30 dB)

Tone controls:
(Bass)
Frequency ..... 40/63/100/160 Hz
Gain ..... ±12 dB
(Treble)
Frequency ..... 2.5 k/4 k/6.3 k/10 k Hz
Gain ..... ±12 dB
HPF(DEH-P640/XN/UC):
Frequency ..... 50/80/125 Hz
Slope ..... –12 dB/oct
Subwoofer:
Frequency ..... 50/80/125 Hz
Slope ..... –18 dB/oct
Gain ..... ±12 dB
Phase ..... Normal/Reverse(DEH-P640/XN/UC)

CD player

System ..... Compact disc audio system
Usable discs ..... Compact disc
Signal format:
Sampling frequency 44.1 kHz
Number of quantization bits
..... 16; linear
Frequency characteristics
..... 5 – 20,000 Hz (±1 dB)
Signal-to-noise ratio . 94 dB (1 kHz)
(IHF-A network)
Dynamic range ..... 92 dB (1 kHz)
Number of channels .. 2 (stereo)

FM tuner

Frequency range ..... 87.9 – 107.9 MHz
Usable sensitivity ..... 9 dBf (0.8 μV/75 Ω, mono, S/N:30 dB)
50 dB quieting sensitivity 15 dBf (1.5 μV/75 Ω, mono)
Signal-to-noise ratio . 70 dB (IHF-A network)
Distortion ..... 0.3% (at 65 dBf, 1 kHz, stereo)
Frequency response .. 30 – 15,000 Hz (± 3 dB)
Stereo separation ..... 40 dB (at 65 dBf, 1 kHz)
Selectivity ..... 70 dB
Three signal intermodulation
(Desire signal level) 30 dBf
(two undesire signal level: 100 dBf)

AM tuner

Frequency range ..... 530 – 1,710 kHz (10 kHz)
Usable sensitivity ..... 18 μV (S/N: 20 dB)
Selectivity ..... 50 dB (± 10 kHz)

Note

- Specifications and the design are subject to possible modifications without notice due to improvements.

● DEH-P6450/XN/ES

General

Power source ..... 14.4 V DC
(10.8 – 15.1 V allowable)
Grounding system ..... Negative type
Max. current consumption
..... 10.0 A
Backup current ..... 5 mA or less
Dimensions (W x H x D):
(DIN) Chassis ..... 178 x 50 x 157 mm
Nose ..... 188 x 58 x 19 mm
(D) Chassis ..... 178 x 50 x 162 mm
Nose ..... 170 x 46 x 14 mm
Weight ..... 1.4 kg

Audio

Continuous power output is 22 W per channnel min. into 4 ohms, both channels driven 50 to 15,000 Hz with no more than 5% THD.
Maximum power output 50 W x 4
for subwoofer (70 W x 1 ch/2 Ω)
Load impedance ..... 4 Ω (4 – 8 Ω [2 Ω for 1 ch] allowable)
Preout max output level/output impedance
..... 2.2 V/1 kΩ
Equalizer (3-Band Parametric Equalizer):
(Low)
Frequency ..... 40/80/100/160 Hz
Q Factor 0.35/0.59/0.95/1.15
(+6 dB when boosted)
Gain ..... ±12 dB
(Mid)
Frequency ..... 200/500/1 k/2 k Hz
Q Factor 0.35/0.59/0.95/1.15
(+6 dB when boosted)
Gain ..... ±12 dB
(High)
Frequency ..... 3.15 k/8 k/10 k/12.5 k Hz
Q Factor 0.35/0.59/0.95/1.15
(+6 dB when boosted)
Gain ..... ±12 dB
Loudness contour:
(Low) ..... +3.5 dB (100 Hz)
+3 dB (10 kHz)
(Mid) ..... +10 dB (100 Hz)
+6.5 dB (10 kHz)
(High) ..... +11 dB (100 Hz)
+11 dB (10 kHz)
(Volume: –30 dB)

Tone controls:
(Bass)
Frequency ..... 40/63/100/160 Hz
Gain ..... ±12 dB
(Treble)
Frequency ..... 2.5 k/4 k/6.3 k/10 k Hz
Gain ..... ±12 dB
Subwoofer:
Frequency ..... 50/80/125 Hz
Slope ..... –12 dB/oct
Gain ..... ±12 dB

CD player

System ..... Compact disc audio system
Usable discs ..... Compact disc
Signal format:
Sampling frequency 44.1 kHz
Number of quantization bits
..... 16; linear
Frequency characteristics
..... 5 – 20,000 Hz (±1 dB)
Signal-to-noise ratio . 94 dB (1 kHz)
(IEC-A network)
Dynamic range ..... 92 dB (1 kHz)
Number of channels .. 2 (stereo)

FM tuner

Frequency range ..... 87.5 – 108 MHz
Usable sensitivity ..... 9 dBf (0.8 μV/75 Ω, mono, S/N:30 dB)
50 dB quieting sensitivity 15 dBf (1.5 μV/75 Ω, mono)
Signal-to-noise ratio . 70 dB (IEC-A network)
Distortion ..... 0.3% (at 65 dBf, 1 kHz, stereo)
Frequency response .. 30 – 15,000 Hz (± 3 dB)
Stereo separation ..... 40 dB (at 65 dBf, 1 kHz)

AM tuner

Frequency range ..... 530 – 1,640 kHz (10 kHz)
531 – 1,602 kHz (9 kHz)
Usable sensitivity ..... 18 μV (S/N: 20 dB)
Selectivity ..... 50 dB (± 10 kHz)
50 dB (± 9 kHz)

Infrared remote control
Wavelength ..... 940 nm ± 50 nm
Output..... typ; 12 mw/sr per infrared LED

Note

- Specifications and the design are subject to possible modifications without notice due to improvements.