OWNERS MANUAL

CENTURY HEATING
G400
VENTED GAS FIREPLACE HEATER

WARNING: If the information in this manual is not followed exactly, a fire or explosion may result causing property damage, personal injury or loss of life

— ***Do not store or use gasoline or other flammable vapors and liquids in the vicinity of this or any other appliance.***

— **WHAT TO DO IF YOU SMELL GAS**

- **Do not try to light any appliance.**
- **Do not touch any electrical switch.**
- **Do not use any phone in your building.**
- **Immediately call your gas supplier from a neighbor's phone. Follow the gas supplier's instructions.**
- **If you cannot reach your gas supplier, call the fire department.**

— **INSTALLATION AND SERVICE MUST BE PERFORMED BY A QUALIFIED INSTALLER, SERVICE AGENCY OR THE GAS SUPPLIER**

*"**WARNING:**" IMPROPER INSTALLATION, ADJUSTMENT, ALTERATION, SERVICE OR MAINTENANCE CAN CAUSE INJURY OR PROPERTY DAMAGE. REFER TO THE OWNER'S INFORMATION MANUAL PROVIDED WITH THIS APPLIANCE FOR ASSISTANCE OR FOR ADDITIONAL INFORMATION CONSULT A QUALIFIED INSTALLER, SERVICE AGENCY, OR GAS SUPPLIER.*

made in CANADA

fabriqué au CANADA

NOTES: THIS IS A SEALED APPLIANCE AND THE GLASS RETAINER MUST ALWAYS BE INSTALLED DURING OPERATION. NEVER OPERATE THE APPLIANCE WITH BROKEN GLASS OR WITH THE GLASS RETAINER OFF. ANY LEAKAGE MAY CAUSE DANGEROUS AIR POLLUTION.

SAVE THIS MANUAL FOR FUTURE REFERENCE

Part No. S19402 Rev. 3 08/99

PRINTED IN CANADA

CENTURY
HEATING

INSTALLATION AND OPERATION INSTRUCTIONS

PLEASE READ THIS MANUAL BEFORE INSTALLING AND USING YOUR VENTED GAS FIREPLACE HEATER

FOR YOUR SAFETY

Do not store or use gasoline or other flammable vapors and liquids in the vicinity of this or any other appliance.

FOR YOUR SAFETY

If you smell gas:

1. Do not try to light any appliance.
2. Do not touch any electrical switch; do not use any phone in the building.
3. **IMMEDIATELY CALL YOUR GAS SUPPLIER** from neighbor's phone. Follow the gas supplier's instructions.
4. If you cannot reach your gas supplier, call the fire department.

DUE TO HIGH TEMPERATURES, THE APPLIANCE SHOULD BE LOCATED OUT OF TRAFFIC AND AWAY FROM FURNITURE AND DRAPERIES.

DO NOT PLACE CLOTHING OR OTHER FLAMMABLE MATERIAL ON OR NEAR THE APPLIANCE. CHILDREN AND ADULTS SHOULD BE ALERTED TO THE HAZARDS OF HIGH SURFACE TEMPERATURE AND SHOULD STAY AWAY TO AVOID BURNS OR CLOTHING IGNITION.

WARNING:
IMPROPER INSTALLATION, ADJUSTMENT, ALTERATION, SERVICE OR MAINTENANCE CAN CAUSE INJURY OR PROPERTY DAMAGE. REFER TO THIS MANUAL FOR ASSISTANCE OR ADDITIONAL INFORMATION CONSULT A QUALIFIED INSTALLER, SERVICE AGENCY OR THE GAS SUPPLIER.

IMPORTANT:
READ ALL INSTRUCTIONS CAREFULLY BEFORE STARTING INSTALLATION. FAILURE TO FOLLOW THESE INSTRUCTIONS MAY RESULT IN A POSSIBLE FIRE HAZARD AND WILL VOID THE WARRANTY.

PLEASE RETAIN THIS MANUAL FOR FUTURE REFERENCE.

STOP !

Questions With Assembly ?
Require Parts Information ?
Missing a Part ?
Product Under Manufacturer's Warranty.

NO NEED TO RETURN TO THE STORE !!

1 (800) 668-5323
Monday to Friday, 9am to 5pm Eastern Standard time

contents

Description	Page #
Gas Train Parts List	2
Technical Specifications	3
Stove Parts List	4
Door Lock Screw	5
Log Set Assembly	5
Minwool Placement	5
Fan Installation Instructions	6
Fan Wiring Diagram	6
Fan Parts List	6
Stove Installation Instructions	7
Stove Clearances	7
Gas Flow	8
Pressure Reading	8
Venting Installation Guidelines (Listed "B" Vent)	9
Checking Vent Capacity	10
Venting Installation Guidelines (Masonry Chimney)	11
Venting Installation Guidelines (Relining Systems)	11
Maintenance Instructions	12
Inspection	12
Stove Safety	13
Lighting Instructions	13
Trouble Shooting - G400	14/15
Trouble Shooting - Venting	16
Decorative Collar Installation	17
Warranty	18

Follow all instructions and guidelines in this manual. Failure to follow these instructions exactly may result in fire or explosion, property damage or loss of life.

gas train parts list

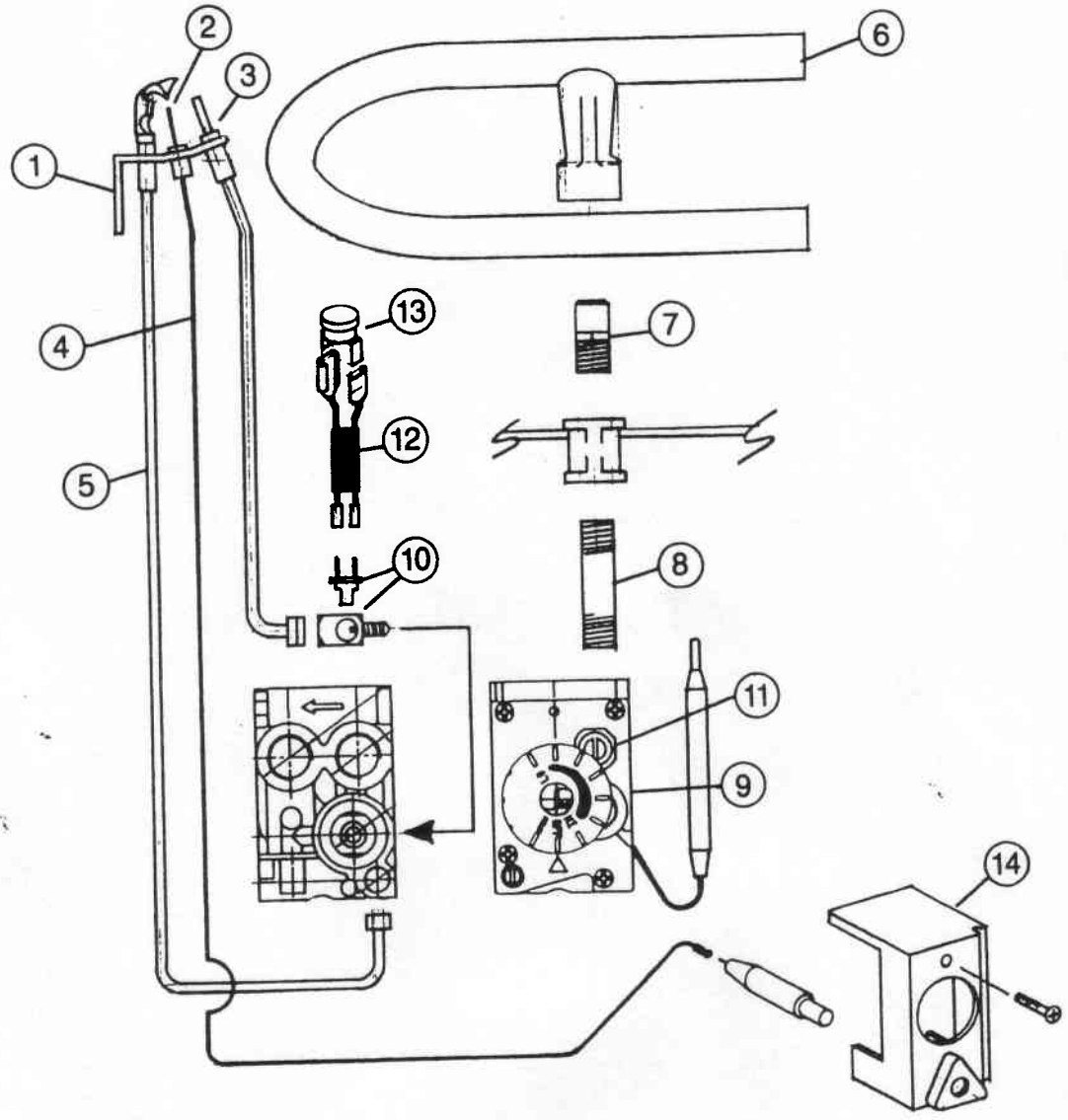

Key#	Part Number	Description	Qty.
1	S11273	Pilot (LP)	1
1	S11272	Pilot (NG)	1
2	S14074	Piezo Electrode	1
3	S11274	Thermocouple	1
4	S11275	Piezo Cable 16"	1
5	S11183	Pilot Tubing 16"	1
6	S41220	Burner (G400)	1
7	S14073	Orifice (LP)	1
7	S14072	Orifice (NG)	1

Key#	Part Number	Description	Qty.
8	S11265	3/8" x 3" Nipple Brass	1
9	~~S11268~~ S32488	Eurosit Valve (LP)	1
9	~~S11267~~ S32482	Eurosit Valve (NG)	1
10	S11271	Interuptor Block	1
11	S11288	Minrate Screw (LP)	1
11	S11287	Minrate Screw (NG)	1
12	S31258	Spill Switch Wire Assembly	1
13	S11276	Spill Switch	1
14	S14062	Eurosit Cover/Piezo	1

Replacement parts are available through your local dealer.

manual control with pressure regulator

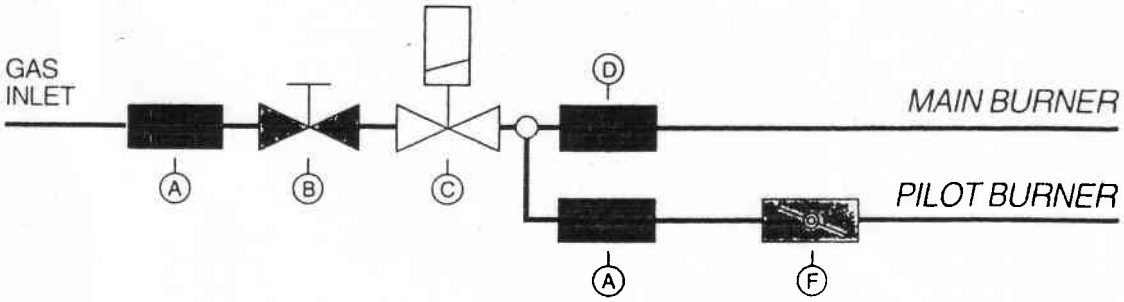

A = Filter
B = Manual shut-off
C = Flame Failure Device
D = Pressure Regulator
E = Thermostat
F = Pilot Adjustment

TECHNICAL SPECIFICATIONS (EUROSIT VALVE)

Inlets (2)	3/8 NPT Female
Outlets (2)	3/8 NPT Female
Maximum Working Pressure	1/2 PSIG
Working Temperature (°F)	32°F to 175°F
Thermostat Range (°F)	55°F to 100°F (Standard)
Calibration Temperature (°F)	100°F at HI Knob Position
Max. Regulated Capacity	N.G. 40,000 BTU/hr.(*)
Min. Regulated Capacity	10,000 BTU/hr.
Pilot Flow Rate	2.5 Ft^3/hr. at 0.5" Pressure Drop
Weight	1.2 lb.

(*) Based on 1,000 BTU/Ft^3:0.64 s.g.gas at 1.00"W.C. pressure drop.

HIGH ELEVATION INSTALLATION

A.G.A. Design certified units are tested and approved for elevations from 0-2000 feet. CGA approved units are certified for elevations from 0-4500 feet.

When installing this unit at an elevation above 2000 feet, (in United States) it is necessary to decrease the input rating by changing the existing burner orifice to a smaller size. Input should be reduced 4 percent for each 1000 feet above sea level. Check with the local gas utility for proper orifice size identification.

When installing this unit at an elevation between 2000-4500 feet (in Canada) the input rating must be reduced by 10 percent.

When installing this unit at an elevation above 4500 (in Canada), check with local authorities.

Consult your local gas company for assistance in determining the proper orifice for your location.

This unit features a thermostatically, modulating eurosit control valve which requires no electricity to operate. *(Valve shown on Page 8).* Once you have selected your desired temperature using the control knob, the temperature sensing bulb will control the amount of fuel consumed accordingly. For example if you set the control knob in the Hi position (110°F) the temperature sensing bulb will reduce the amount of fuel consumed as your rooms ambient temperature rises. If you have selected a lower setting and you rooms ambient temperature rises above that setting the valve will "shut off" the flow of gas to the burner until the rooms ambient temperature drops, at which time the valve will automatically re-light.

Due to the sensitivity of the thermostatic bulb, we recommend that it be placed in as cool a location as possible. One possible location is to place the bulb on your gas piping as far from the stove as possible. The cool gas entering your home will keep the temperature sensing bulb cool allowing maximum heat output.

stove parts list

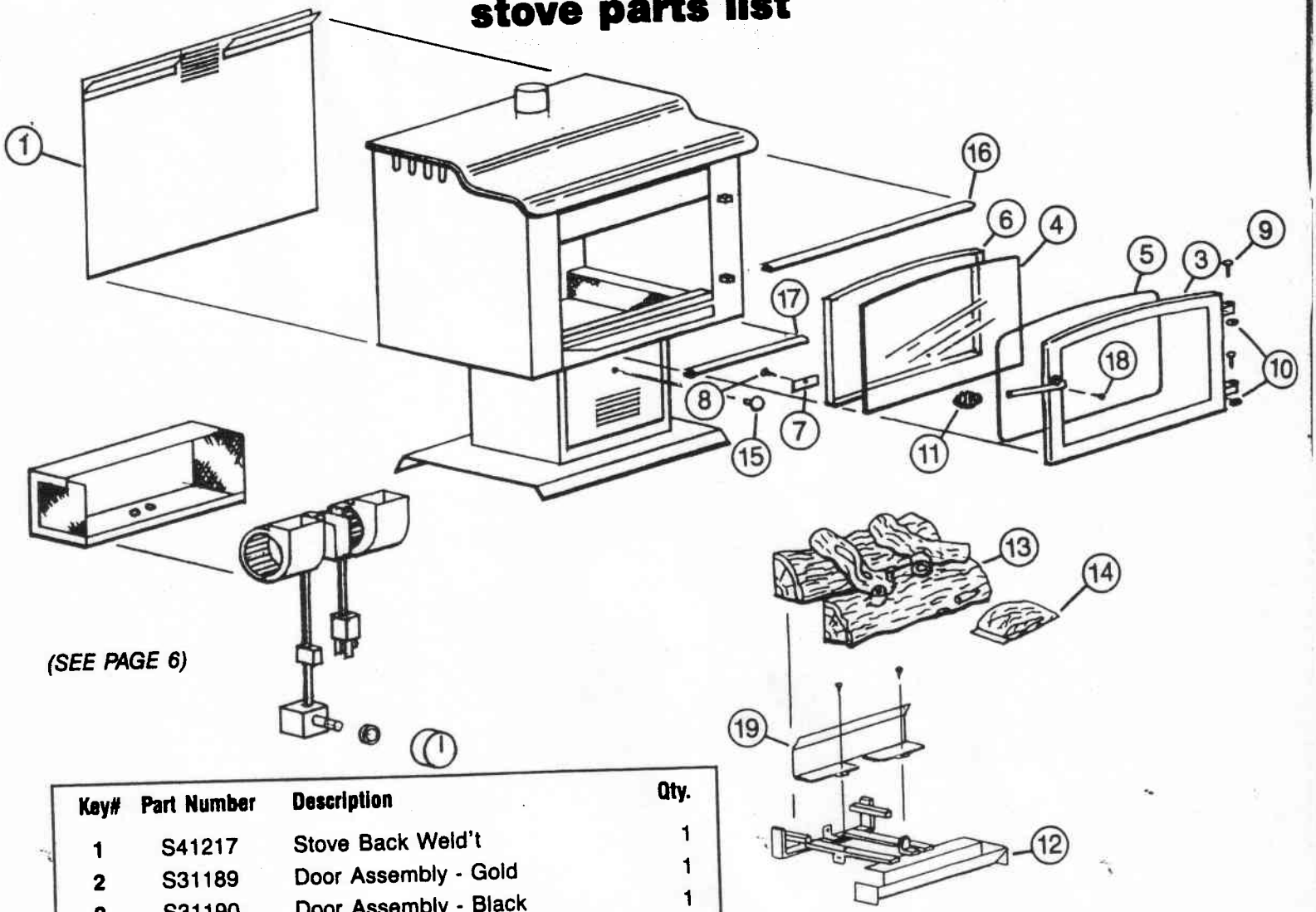

(SEE PAGE 6)

Key#	Part Number	Description	Qty.
1	S41217	Stove Back Weld't	1
2	S31189	Door Assembly - Gold	1
2	S31190	Door Assembly - Black	1
3	S41222	Door Weld't - Gold	1
3	S41224	Door Weld't - Black	2
4	S10014	Glass - Hi Temp	1
5	S15001	1/8'' Window Tape	3.8'
6	S15011	5/8'' Door Gasket	5.25'
7	S37026	Glass Clip	1
8	S11086	Screw Comb HO #10	3
9	S11066	Hinge Pin - Brass	2
9	S11005	Hinge Pin - Black	2
10	S11090	Push Nut - 3/8''	2
11	S11007	Spring Handle - 1/2''	1
12	S41219	Gas Grate	1
13	S16154	Gas Log Set	1
14	S16069	Glowing Ember	1
15	S11211	Access Door Handle c/w Screw	1
16	S32098	Brass Trim 24''	1
17	S32062	Brass Trim 17''	1
18	S11086	Screw Comb #10 HD	1
19	S32397	Burner Deflector Shield	1

Replacement parts are available through your local dealer.

ANY SAFETY SCREEN OR GUARD REMOVED FOR SERVICING AN APPLIANCE MUST BE REPLACED PRIOR TO OPERATING THE APPLIANCE.

"WARNING" DO NOT OPERATE THE APPLIANCE WITH THE GLASS FRONT REMOVED, CRACKED OR BROKEN. REPLACEMENT OF THE GLASS SHOULD BE DONE BY A LICENSED OR QUALIFIED SERVICE PERSON.

YOUNG CHILDREN SHOULD BE CAREFULLY SUPERVISED WHEN THEY ARE IN THE SAME ROOM AS THE APPLIANCE.

door lock screw

REMOVE DOOR LOCK SCREW BEFORE ATTEMPTING TO OPEN DOOR.
BE SURE TO REPLACE AFTER SERVICING TO AVOID ACCIDENTAL OPENING OF DOOR.

set assembly

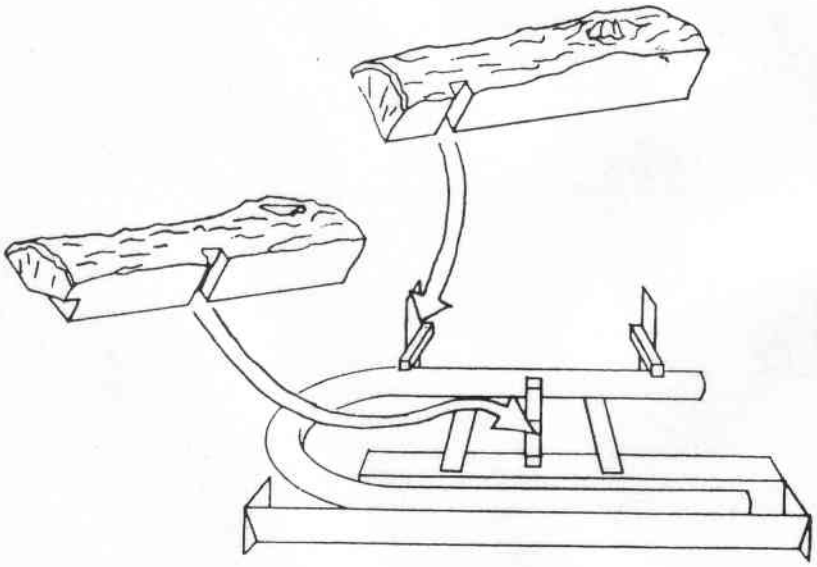

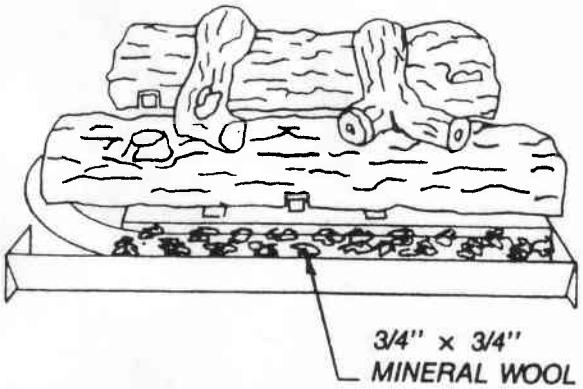

mineral wool placement

Remove a handful of mineral wool from bag supplied. Break into pieces roughly 3/4" x 3/4". Loosely and evenly place wool in front log tray of grate as shown above.

***CAUTION:* DO NOT PACK WOOL UNDER BURNER DO NOT USE "TOO MUCH" WOOL.**
USE ONLY IN LOCATION SPECIFIED.
RE-INSTALL DOOR LOCK SCREW BEFORE OPERATING UNIT.
CAUTION: ENSURE FRONT PORTION OF BURNER IGNITES AFTER INSTALLING WOOL.

FIG. A

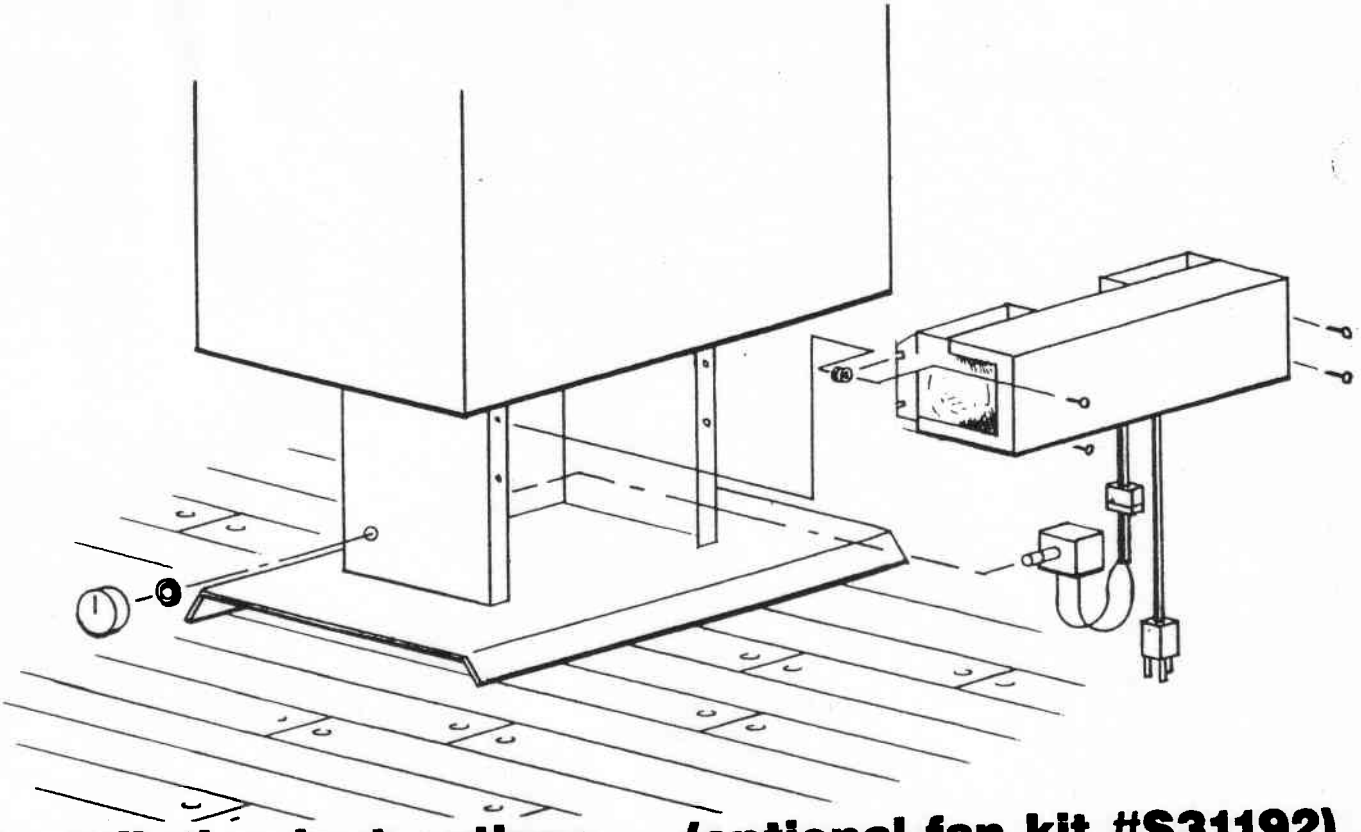

fan installation instructions (optional fan kit #S31192)

1. Remove fan from carton.
2. Using four screws provided attach fan to stove as shown above. Be sure to install rubber gromets as shown above.
3. Speed control switch is to be inserted into pedestal, as shown, and tighten until secure.
4. Snap variable speed control knob into place.
5. Plug fan in.

CAUTION — *"Label all wires prior to disconnection when servicing controls. Wiring errors can cause improper and dangerous operation."*
"Verify proper operation after servicing."

WARNING
Electrical Grounding Instructions

This appliance is equipped with a three-prong (grounding) plug for your protection against shock hazard and should be plugged directly into a properly grounded three-prong receptacle.
Do not cut or remove the grounding prong from this plug.

FAN WIRING DIAGRAM

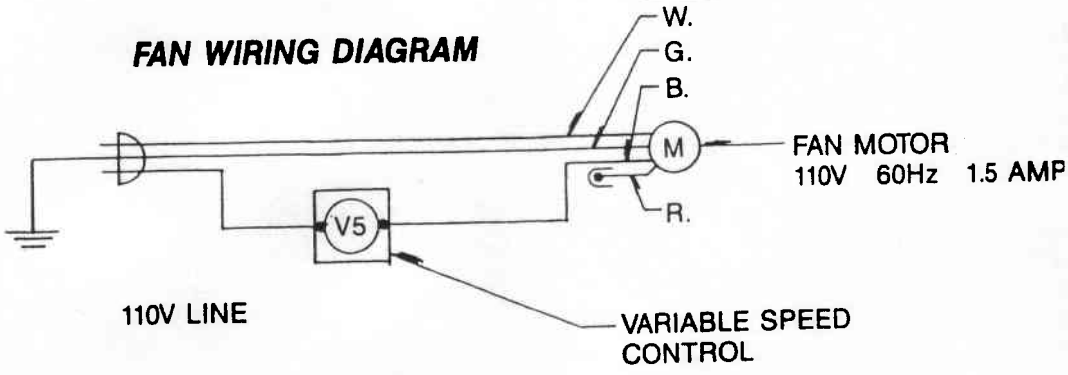

Original wiring that is replaced must be replaced with wire having at least a 105°C temperature rating.

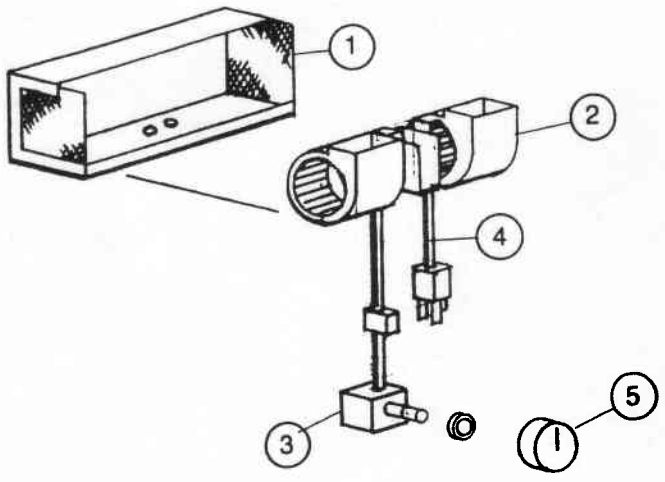

Key#	Part Number	Description	Qty.
1	S41225	Fan Case Weld't - G400	1
2	S41059	Motor Assy - G300	1
3	S14003	Speed Control Switch	1
4	S14005	Power Cord	1
5	S14009	Speed Control Knob	1

CLOTHING OR OTHER FLAMMABLE MATERIALS SHOULD NOT BE PLACED ON OR NEAR THE APPLIANCE.

installation instructions

1.

GAS SPECIFICATIONS		
	Natural Gas	**Propane/LP**
Manifold Pressure	3.5'' W.C.	10.0'' W.C.
Minimum Inlet Pressure*	5.0'' W.C.	11.0'' W.C.
Maximum Inlet Pressure	10.5'' W.C.	13.0'' W.C.
BTU Input Rating (Max.)	30,000	26,000
BTU Input Rating (Min.)	23,500	23,500
**For purpose of Input Adjustment.*		

2. Make gas connection to the valve assembly with:
   I) Black iron pipe or malleable iron fittings or . . .
   II) A corrugated metal connector (not to exceed 2 feet in length) or . . .
   III) Copper pipe or tubing (internally tinned) if acceptable to the authority having jurisdiction.
3. Turn gas supply on and check for leaks. DO NOT USE OPEN FLAME. Use soap and water solution.
4. For correct positioning of logs on the grate, refer to SET ASSEMBLY.
5. Installation and provision for combustion and ventilation air must conform with local codes or, in absence of local codes, with the National Fuel Gas Code, ANSI Z223.1 - latest edition - in the United States or, in Canada, with the current CAN/CGA - B149. Installation Code.
6. Keep operating area clear and free from combustible materials, gasoline, and other flammable liquids and vapours.
7. The appliance and its individual shut off valve must be disconnected from the gas supply piping system during any pressure testing of the system at test pressures in excess of 1/2 psig (3.5 kPa.)
8. The appliance must be isolated from the gas supply piping by closing its individual manual shut off valve during any pressure testing of the gas supply piping system at test pressure equal to or less than 1/2 psig (3.5 kPa.).
9. A 1/8'' inch N.P.T. plugged tapping, accessible for test gauge connection must be provided immediately upstream of the gas supply connection to the appliance.
10. A gas appliance must not be connected to a chimney flue serving a separate solid fuel burning appliance.

DUE TO HIGH TEMPERATURES, THE APPLIANCE SHOULD BE LOCATED OUT OF TRAFFIC AND AWAY FROM FURNITURE AND DRAPERIES.

The appliance, when installed must be electrically connected and grounded in accordance with local codes or, in the absence of local codes, with the current CSA C22-1 Canadian Electric Code (Canada) or the National Electrical Code ANSI/NFPA 70-latest edition

CHILDREN AND ADULTS SHOULD BE ALERTED TO THE HAZARDS OF HIGH SURFACE TEMPERATURE AND SHOULD STAY AWAY TO AVOID BURNS OR CLOTHING IGNITION.

CLEARANCE TO COMBUSTIBLES	
Ceiling Height	Minimum = 24''
Sides	Minimum = 8''
Front	Minimum = 36''
Back of Stove	Minimum = 9''

DO NOT USE This heater if any part has been under water. Immediately call a qualified service technician to inspect the heater and to replace any part of the control system and any gas control which has been under water.

please note

It is normal for your Century Heating fireplace to give off some odour the first time it is burned. This is due to the curing of the paint and any undetected oil from the manufacturing process.

Please ensure that your room is well ventilated - open all windows.

IT IS IMPERATIVE THAT THE CONTROL COMPARTMENT BURNER, AND CIRCULATING AIR PASSAGE WAYS BE KEPT CLEAN AND CLEAR. PROVIDE FOR ADEQUATE COMBUSTION AND VENTILATION AIR. PROVIDE ADEQUATE CLEARANCES AROUND AIR OPENINGS AND ADEQUATE ACCESSIBILITY CLEARANCE FOR SERVICE AND PROPER OPERATION. NEVER OBSTRUCT THE FRONT OPENING OF THE APPLIANCE OR THE DIRECT VENT TERMINATION ON THE EXTERIOR OF THE BUILDING.

temperature range

The thermostat (#1 see below drawing) is calibrated and set at the factory. (55-110°F)

gas flow

Maximum flow rate can be checked by cooling the thermostat bulb below room temperature and turning the knob (#4 see below drawing) counter clockwise to the HI position.
Minimum flow rate can be checked by cooling the thermostatic bulb below room temperature and turning the knob (#4 see below drawing) counter clockwise slowly and stopping when you hear the "snap". This flow rate is determined by the O.E.M. at the design stage and set with a pre-drilled screw (minimum rate screw).
This screw (#3 see below drawing) must be driven fully down to assure proper flow.

pressure readings

Inlet pressure can be checked by turning captured screw (#6 see drawing below) counter clockwise 2 or 3 turns and then placing tubing to gauge over test point.
Outlet pressure can be checked in the same manner above using captured screw (#7).

WARNING: **AFTER TAKING PRESSURE READINGS, BE SURE TO TURN CAPTURED SCREWS CLOCKWISE FIRMLY TO RESEAL. DO NOT OVER TORQUE.**

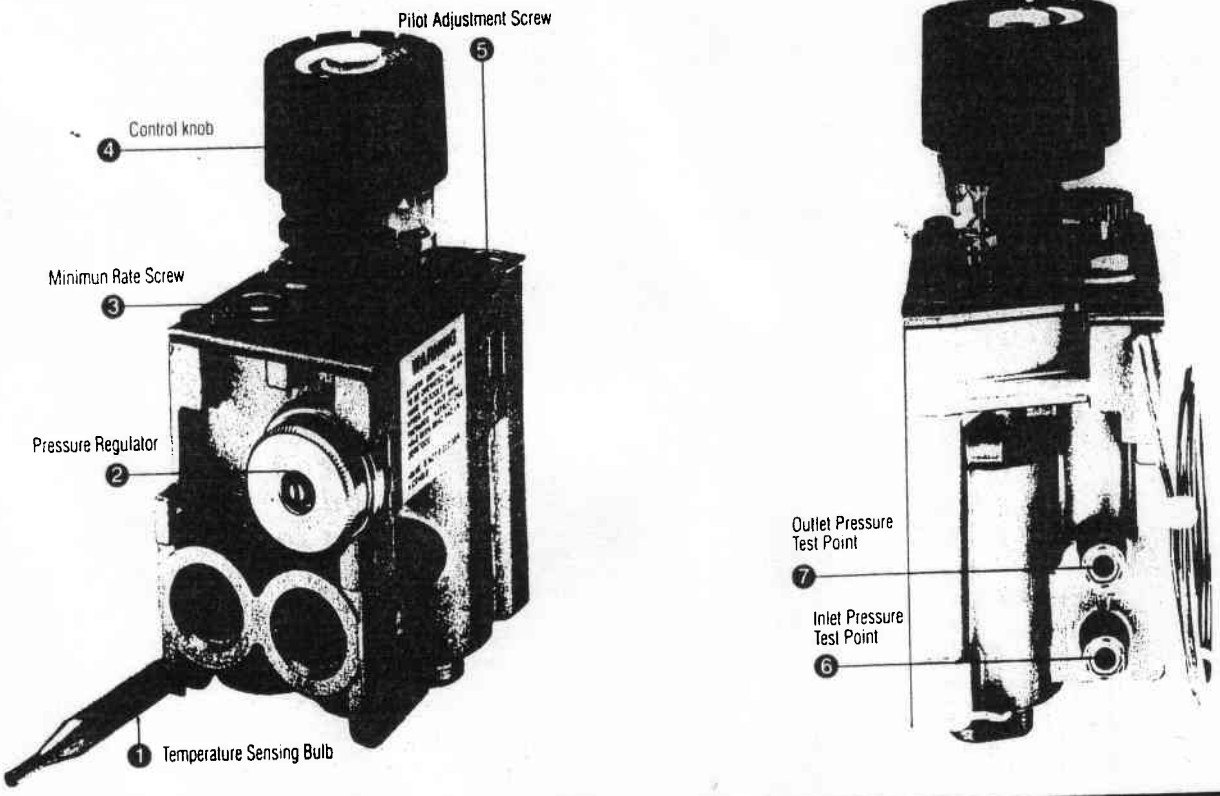

WARNING: **THE CONTROL HAS AN INTERLOCK DEVICE; AFTER SHUTTING OFF ALL GAS FLOW, THE PILOT BURNER CANNOT BE RELIT UNTIL THE THERMOCOUPLE HAS COOLED, ALLOWING THE ELECTROMAGNET TO BE RELEASED (approx. 60 sec.)**

THE GAS CONTROL KNOB IS DESIGNED TO BE OPERATED BY HAND. DO NOT USE ANY TOOLS DURING THIS OPERATING. DAMAGED KNOBS MAY RESULT IN SERIOUS INJURY.

venting installation guidelines

PROPER INSTALLATION OF GAS VENTING IS AN IMPORTANT SAFETY AND APPLIANCE PERFORMANCE CONCERN. IF YOU ARE NOT QUALIFIED, DO NOT ATTEMPT INSTALLATIONS OR REPAIRS OF GAS APPLIANCES, PIPING OR VENTING.

listed vents

A listed gas vent is a factory made and listed system designed, and installed exclusively for removing products of combustion, excess air, and dilution air resulting from burning fuel gas. metal vents, the most common type of vent, employ double wall construction enclosing an insulating air space. This air space both helps keep flue gases warm and reduce heat transferred to nearby combustibles.

type B vent installation (Listed B-0 or Greater)

Before beginning installation be sure that the overall height and Gas Vent size conform to building code requirements. Gas vents extending through pitched roofs can extend a minimum height of at least 600 mm (2') higher than any obstruction within 3m (10'). Gas Vents extending through flat roofs are required to extend at least 600 mm (2') above the roof and at least 600 mm (2') higher than any portion of the building or adjoining building within 3m (10') of the Gas Vent.

Venting instruction contained in this manual may or maynot apply to your area. Consult your local authority for requirement in your area.

Where the Gas vent extends through accessible spaces, it should be enclosed to avoid personal contact and damage. Enclosure walls should have a fire rating equal to or greater than the floors through which the Gas Vent passes except in single or two-family dwellings.

Situate the Gas Vent in the structure so that it can be installed without cutting joists, sills, plates or major load bearing partitions or members. It is also important to locate the base of the Gas Vent as near as possible to the heating appliance.

When the appliance is installed directly on carpeting, tile or other combustible material other than wood flooring, the appliance shall be installed on a metal or wood panel extending the full width and depth of the appliance.

This heater must be properly connected to a venting system. This heater is equipped with a vent safety shutoff system.

TYPICAL "B" VENT INSTALLATION

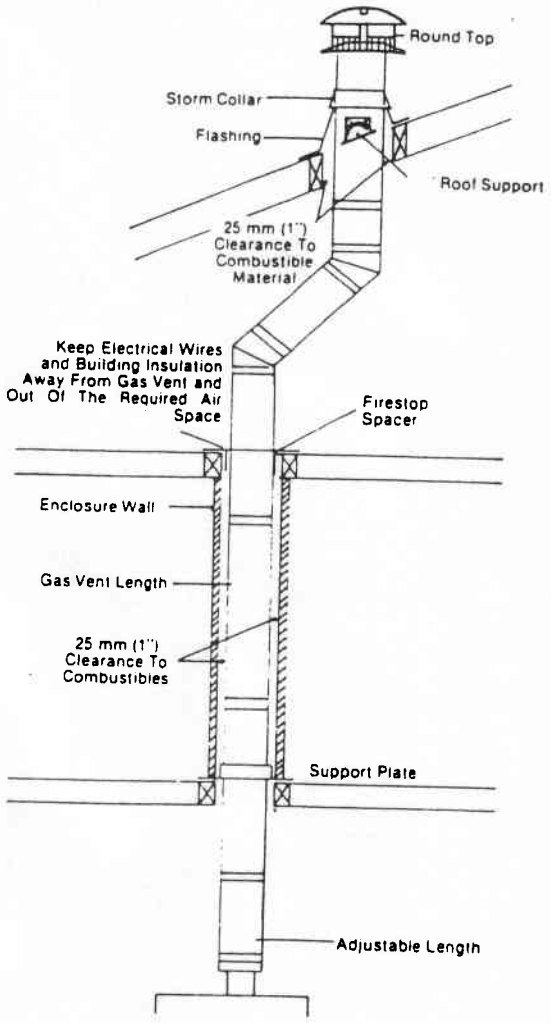

This appliance is equipped with a safety control system designed to protect against improper venting of combustion products.

THIS APPLIANCE MUST NOT BE CONNECTED TO A CHIMNEY FLUE SERVING A SEPARATE SOLID FUEL BURNING APPLIANCE

The authority having jurisdiction should be consulted before installing the Gas Vent.

Use only vents labelled "FOR EXTERIOR USE" above the roofline.

Consult the Authority having jurisdiction to select the correct Gas Vent diameter. Avoid using a larger than necessary vent diameter.

venting installation guidelines

WARNING!
Installations should only be made by qualified persons who are familiar with the safety procedures required for the installation of the product, who are equipped with the proper tools and testing instruments, and who have achieved proper certification of licensing. Installations made be unqualified persons can result in hazards subjecting the unqualified person to the risk of injury or electrical shock which can be serious or even fatal not only to the installer, but also to persons being served by the equipment.

installation (listed B-0 vent) continued

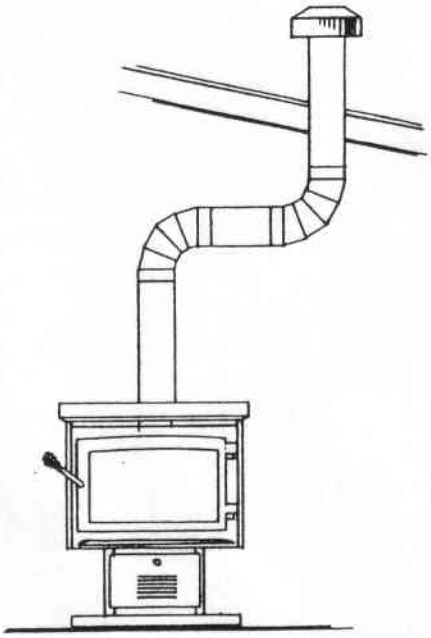

CHECKING VENT CAPACITY

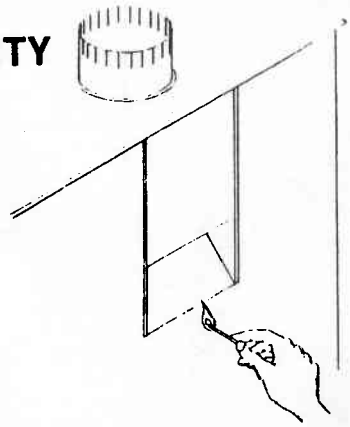

Complete all gas piping, electrical, and vent connections. After adjusting the appliance(s) and lighting the main burner(s), allow a couple of minutes for warm-up. Hold a lighted match just under the rim of the of the draft hood relief opening(s). Proper venting will draw the flame toward or into the draft hood. Improper venting, indicated by escape or spillage of burned gas, will cause match to flicker or go out. Smoke from a cigarette will also be pulled into the draft hood if the vent is drawing properly.

The draft hood must be installed so as to be in the same atmospheric pressure zone as the combustion air inlet to the appliance.

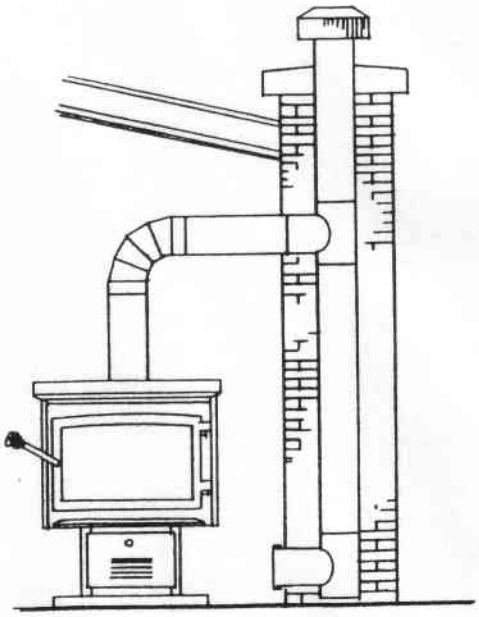

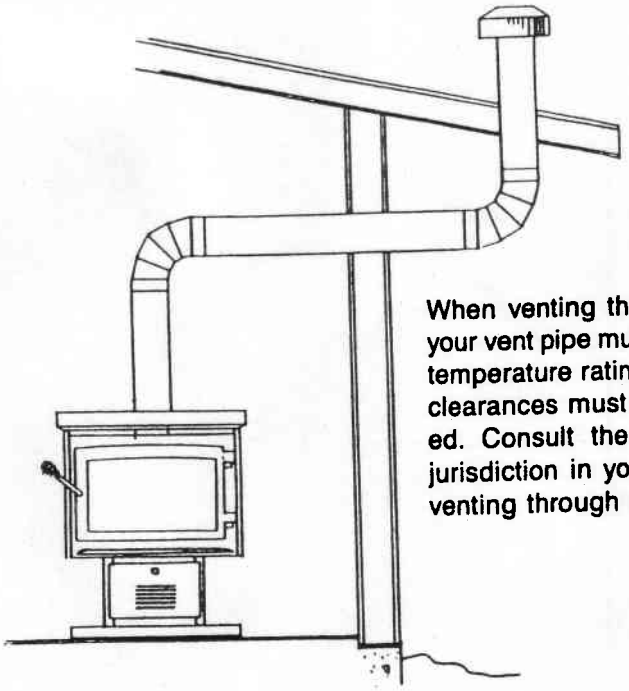

When venting through a side wall your vent pipe must have the proper temperature rating. Manufacturer's clearances must also be maintained. Consult the authority having jurisdiction in your area regarding venting through side wall.

venting installation guidelines

WARNING!
Installations should only be made by qualified persons who are familiar with the safety procedures required for the installation of the product, who are equipped with the proper tools and testing instruments, and who have achieved proper certification of licensing. Installations made be unqualified persons can result in hazards subjecting the unqualified person to the risk of injury or electrical shock which can be serious or even fatal not only to the installer, but also to persons being served by the equipment.

chimneys

- Complete familiarity with chimney condition, height, size, clearance to combustibles and other factors is essential.

Consult the authority having jurisdiction in your area regarding masonry chimney venting applications.

A complete chimney inspection made by qualified persons should be performed.

- Appliances using B vent connectors to vent into a masonry or factory-built chimney should not exceed 1-1/2 feet in length for every inch of connector diameter (3 inch vent connector has a maximum 4-1/2 foot length; 5 inch connector has maximum 7-1/2 foot length).
- Oversized chimneys should be relined with appropriate listed relining systems.
- Cleanout access may be required.

relining systems

- Suitability and approval of relining materials should be determined.
- Condition, size, height, termination of the chimney to be relined must be determined.
- No substitution of components should be made.
- Joints and connectors should be made according to manufacturer's instructions.

Consult the authority having jurisdiction in your area regarding listed chimney liner venting applications.

OPERATION OF IMPROPERLY INSTALLED AND MAINTAINED VENTING SYSTEM COULD RESULT IN SERIOUS INJURY, PROPERTY, DAMAGE OR LOSS OF LIFE.

installation

STRAIGHT INSTALLATION INTO MASONRY CHIMNEY

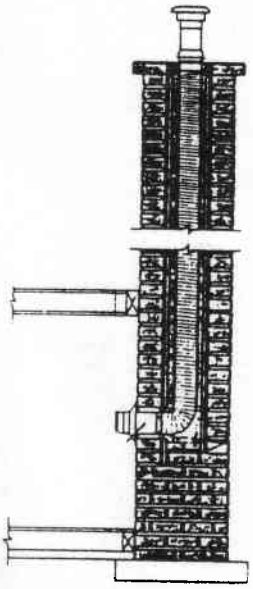

installation *(Listed Chimney Liner)*

TYPICAL STRAIGHT INSTALLATION

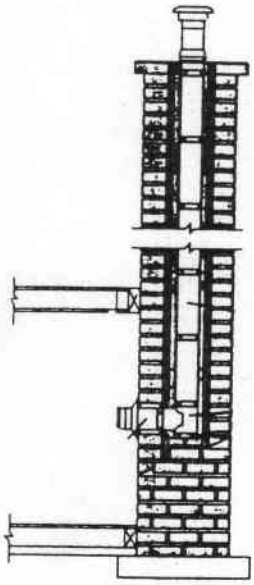

Follow all instructions and guidelines in this manual. Failure to follow these instructions exactly may result in fire or explosion, property damage or loss of life.

1. Periodic visual checks of the pilot should be conducted to ensure that the flame is present except when the valve control knob is in the "**OFF**" position.

2. Periodically remove the logs from the grate assembly and vacuum any loose particles from the grate and burner areas.

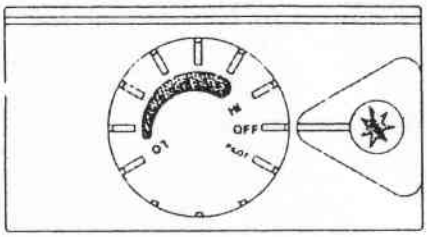

GAS CONTROL

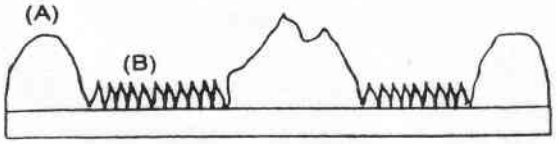

TYPICAL FLAME PATTERN SHOWING BURNER (A) AND CARRY DOWN PORTS (B)

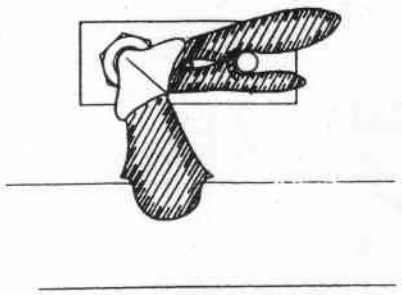

VIEW OF PILOT FLAME FROM ABOVE

3. All component parts are available directly through the manufacturer. Write or phone.
   Century Heating
   330 Humberline Drive, Etobicoke
   Ontario, Canada, M9W 1R5
   1-800-836-1210 United States Watts Line
   1-416-798-2800 Canada

4. **Installation and all repairs should be done by a qualified service person. The appliance should be inspected before use and at least annually by a qualified service person. It is imperative that control compartments, burners and circulating air passageways of the appliance be kept clean. More frequent cleaning may be required due to excessive lint from carpeting, bedding material etc.**

5. Disconnect all power to unit before servicing.

WARNING: DO NOT ADJUST THE GAS ORIFICE. KEEP AREA CLEAR AND FREE FROM COMBUSTIBLE MATERIALS, GASOLINE AND OTHER FLAMMABLE VAPOURS AND LIQUIDS.

inspection

— Pilot and main burner flames should be checked visually each month.
— Check and clean the main burner once a year.
— Venting should be checked once a year to assure proper functioning.

cleaning of main burner and orifice

(Disconnect all power and gas supply to the unit).

1. Remove burner hold down screws and remove burner and burner deflector shield.
2. Using a vacuum, clean bottom of firebox and orifice.
3. Clean burner parts using vacuum and any particals that may be lodged in ports are to be removed using a small wire or paperclip. Ensure that all parts are free from debris.
4. Re-install burner and burner deflector and put logs in their proper location.

FOR YOUR SAFETY
READ BEFORE LIGHTING

WARNING:
IF YOU DO NOT FOLLOW THESE INSTRUCTIONS EXACTLY A FIRE OR EXPLOSION MAY RESULT CAUSING PROPERTY DAMAGE, PERSONAL INJURY OR LOSS OF LIFE.

a. This appliance has a piezo ignition pilot. When lighting the pilot, follow these instructions exactly.

b. **BEFORE LIGHTING** smell all around the appliance area for gas. Be sure to smell next to the floor because some gas is heavier than air and will settle on the floor.

WHAT TO DO IF YOU SMELL GAS

- Do not try to light any appliance.
- Do not touch any electrical switch; do not use any phone in your building.
- Immediately call your gas supplier from a neighbour's phone.
  Follow the gas supplier's instructions.
- If you cannot reach your gas supplier, call the fire department.

c. Use only your hand to push in or turn the gas control knob. Never use tools. If the knob will not push in or turn by hand, don't try to repair it, call a qualified service technician. Force or attempted repair may result in a fire or explosion.

d. Do not use this appliance if any part has been under water. Immediately call a qualified service technician to inspect the appliance and to replace any part of the control system and any gas control which has been under water.

LIGHTING INSTRUCTIONS

1. **STOP!** Read the safety information.
2. Push in gas control knob slightly and turn clockwise to **"OFF"**.

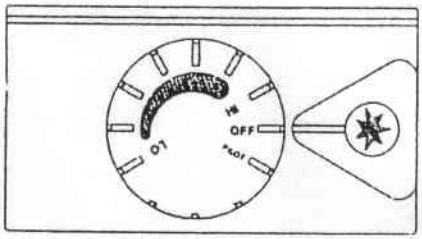

3. Wait five (5) minutes to clear out any gas. If you then smell gas, **STOP!** Follow "B" in the safety information. If you don't smell gas, go to next step.
4. Find pilot.
5. Turn knob on gas control counter-clockwise to "PILOT".
6. Push in control knob all the way and hold in. Immediately light the pilot with ignitor. Continue to hold the control knob in for approx. (2) minutes after the pilot is lit. Release knob and it will pop back up. Pilot should remain lit. If it goes out, repeat steps 5 through 8.
   - If knob does not pop up when released, stop and immediately call your service technician or gas supplier.
   - If the pilot will not stay lit after several tries, turn the gas control knob to **"OFF"** and call your service technician or gas supplier.
   - Disconect all power source to the unit.
7. Turn gas control knob counter-clockwise to **"ON"**.

TO TURN OFF GAS TO APPLIANCE

1. Push in gas control knob slightly and turn clockwise to **"OFF"**. ***Do not force.***

TROUBLE SHOOTING - G400

With proper installation and maintenance, your new Gas Fireplace should provide years of trouble-free service. If you do experience a problem, refer to the trouble shooting guide shown below. This guide will assist a **qualified service person in the diagnosis of problems and the corrective action to be taken.**

SYMPTOM	POSSIBLE CAUSE	CORRECTIVE ACTION
I. Spark Ignitor will not light after repeated triggering of red button.	A. Defective Ignitor (no spark at electrode).	1. Check for spark at electrode and pilot; if no spark and electrode wire is properly connected, replace ignitor.
	B. Defective pilot or misaligned electrode at pilot (spark at electrode).	1. Using a match, light pilot. If pilot lights, turn off pilot and trigger the red button again. If pilot lights, an improper gas/air mixture caused the improper lighting and a longer purge period is recommended. If pilot will not light - check gap at electrode and pilot - should be 1/8 inch to have a strong spark. If OK, replace pilot.
	C. No gas or low gas pressure.	1. Check remote shut off valves from fireplace. Usually there is a valve near the fireplace and sometimes there is a valve near the main. There can be more than one (1) valve between the fireplace and main.
		2. Low pressure can be caused by a variety of situations such as a bent line, too narrow diameter of pipe or even low line pressure. Check for kinked lines. If none, consult with plumber or gas supplier.
	D. No L.P. in tank.	1. Check L.P. (Propane) You may be out of fuel.
II. Pilot will not stay lit after carefully following lighting instructions.	A. Defective thermocouple.	1. Check pilot flame. Must impinge on thermocouple. Clean and or adjust pilot for maximum flame impingement on thermocouple.
	B Defective valve.	1. Replace valve - (It is not field serviceable).
	C. Plugged burner orifice.	1. Check burner orifice for stop-page and remove.

TROUBLE SHOOTING - G400

SYMPTOM	POSSIBLE CAUSE	CORRECTIVE ACTION
III. Frequent pilot outage problem.	A. Pilot flame may be too low or blowing (high), causing the pilot safety to drop out.	1. Clean and adjust pilot flame for maximum flame impingement on thermocouple.
IV. Pilot and main burner go out white being in operation.	A. High limit switch is defective or has reached it's maximum temperature.	1. Allow unit to cool. Then repeat lighting instructions.
		2. If 1. above does not allow for ignition, check high limit switch. Place jumper wires across high limit switch. If you can re-ignite the pilot, your high limit switch is defective. Do not use fireplace until the high limit switch is replaced, as this is an important safety feature. If the unit does not light with jumper wires in place, the wires may be defective or the connectors are bad.
	B. NO L.P. in tank.	1. Check L.P. (Propane) tank. You may be out of fuel.
	C. Bad thermocouple.	1. Replace if necessary.
V. Glass soots.	A. Flame impingement on logs.	1. Adjust the log set so that the flame does not impinge on it.
	B. Improper venturi setting.	1. Adjust the air shutter at the base of the burner.
	C. Minwool around base of burner or blocking bottom front grille.	1. Inspect the base of the burner. It is imperative that NO material be placed around the base of the burner or in bottom front grille air passage way.
VI. Flame burns blue and lifts off burner.	A. Insufficient oxygen being supplied.	1. Check to make sure that the minwool has not been improperly placed at the burner base or blocking bottom front grille.

VENTING PROBLEMS TROUBLE SHOOTING

Most venting problems are caused by incorrect vent sizing, improper installation, or inadequate air supply. A preliminary check for a field problem might include:

- Using a draft meter to determine if venting system draft meets manufacturer's specifications.
- Checking the vent sizing according to manufacturer's specifications, appliance input, and venting configuration.
- Examining the entire venting system for faults such as disconnected joints or damaged vent sections.
- Making sure vent and air openings are not obstructed.

If these procedures do not reveal the source of the problem, troubleshooting may include attention to common venting problems discussed below.

FLUE GAS SPILLAGE

Spillage occurs when flue gases cannot exit the vent system and back up into the dwelling. A primary symptom of appliances equipped with a Vent Safety Shutoff System (flue spill switch) is unexplained appliance shutoffs. Other symptoms of flue gas spillage at the draft hood include cendensation on walls and windows and/or noticeable odours. But spillage may also result in the release of carbon monoxide, a colourless, odourless, highly toxic gas. A simple spillage test can be conducted if spillage is suspected; see owners manual.

CAUSES OF SPILLAGE AND CORRECTIVE ACTION

Incorrect Vent Sizing (H)
If the vent is too small or too short, spillage may occur. If the vent is too large, excessive dilution air may cool flue gases and reduce draft, causing spillage. The vent cap size should also be checked. Check manufacturer's instructions, appliance input rating, and appropriate sizing tables.

Venting Condition
Loose joints can affect draft and cause spillage. Mashed-in vent sections and damaged vent caps can restrict flow and cause spillage. Examine and replace as needed.

Obstructions
Small animals or birds may get into and block the vent or draft hood outlet. Dust, lint, and foreign objects may obstruct air inlets. Remove obstructions and clean openings.

Lateral Run (L)
Lengthy horizontal or non-vertical runs cause resistance to flow and may reduce draft enough to cause spillage. The pitch of lateral runs can also be a problem; lateral runs should be pitched 1/4'' rise per foot of horizontal run from the appliance to the vent.

Elbows
Too many elbows cause excessive restriction of flow and may result in spillage. Usually, two 90 degree turns can be tolerated in a properly sized venting system. More than two may cause problems and necessitate changing the system.

Negative pressure in the Dwelling
An extremelly tight house may not supply adequate combustion and venting air. Use of mechanical exhaust such as a dryer vent or range vent may worsen the problem. An air exchange system must be installed in the dwelling to correct this problem.

Flue Gas Cooling
Venting exposed to extremely cold temperatures or venting of single wall construction lose heat needed to maintain draft; massive masonry chimneys absorb needed heat. If the flue gases cool excessively, draft is reduced and spillage may result. Use proper materials, insulate and protect properly, reline when necessary.

Down Drafts
In certain wind conditions and in certain relationships with nearby structures and objects, high pressure conditions may affect draft negatively. Relocate the vent cap, raise its height, or use an approved high wind cap.

DECORATIVE COLLAR INSTALLATION

Supplied with your **G400** gas unit is a decorative collar you may wish to use to enable you to give your unit that "**woodstove**" look by hiding your venting inside regular 6" stove pipe.

INSTALLATION INSTRUCTIONS

1. Center collar on vent opening and mark holes (3 places). Drill the 3 marks using 1/8" drill and install collar with 3 screws provided.
2. Install venting followed by black 6" pipe as you go.

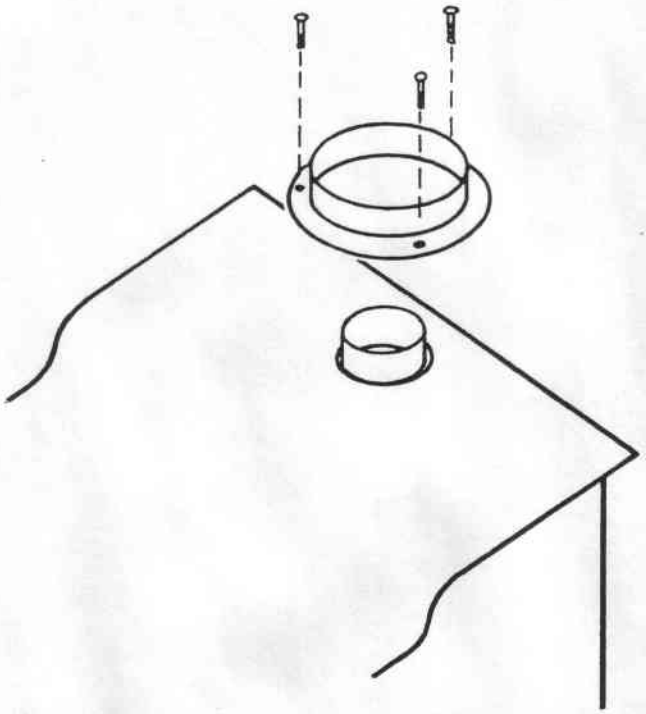

IMPORTANT
6" pipe is to be used for appearance only. It is ***NOT*** *approved for use as venting. See venting instructions.*

WARRANTY INFORMATION

KEEP THIS WARRANTY

MODEL # _____

SERIAL # _____

DATE PURCHASED _____

Always specify model and serial numbers when communicating with the factory. We reserve the right to amend these specifications at any time without notice. The only warranty applicable is our standard written warranty. We make no other warranty, expressed or implied.

TWO YEAR LIMITED WARRANTY

This Warranty gives you specific legal rights and you may also have other rights that vary in each State or Province.

1. The manufacturer warrants to the original consumer/purchaser that, subject to reasonable and necessary maintenance, your new gas appliance (exclusive of exterior paint, pipe and accessories) will be free from defects in materials and workmanship for two years from the date of purchase and while under original ownership.
   This warranty is extended only to the original retail purchaser.
   This warranty covers only the cost of part(s) required to restore this heater to proper operating condition. Warranty part(s) MUST be obtained through authorized dealers/distributors of the Century Heating who will provide original factory replacement parts. Failure to use original factory replacements parts voids this warranty. The heater MUST be installed by a qualified installer in accordance with all local codes and instructions furnished with the unit.
2. This warranty is effective only as to new gas appliances which have not been altered, changed, repaired or treated since shipment from the factory, unless such modifications have been authorized in writing by the manufacturer.
3. This warranty does not apply to parts that are not in original condition because of normal wear and tear or parts that fail or become damaged as a result of misuse, accidents, lack of proper maintenance or defects caused by improper installation. Travel, diagnostic cost, labor, transportation and any and all such other costs related to repairing a defective heater will be the responsibility of the owner.
4. To make claim under this warranty, the original consumer purchaser shall notify the dealer from whom the appliance was purchased, in writing, within ten (10) days of the discovery of the alleged defect and provide proof of purchase. If the dealer is unavailable, then notice must be delivered to Century Heating at : 330 Humberline Drive, Etobicoke, Ontario, Canada, M9W 1R5
5. The manufacturer shall, at its option, repair or replace the defective parts, after inspection and determination of the defect. The purchaser shall be liable for all costs and incidental expenses in respect of shipping, labour or transportation for warranty service. The manufacturer shall not be liable for any incidental, consequential, special or indirect damages arising out of a defect or a breach of this warranty.

Some States and Provinces do not allow the exclusion or limitation of incidental or consequential damages, so the above limitation or exclusion may not apply to you.

CFM

CFM Corporation

2695 Meadowvale Boulevard
Mississauga, Ontario L5N 8A3 Canada
(800) 668-5323

www.cfmcorp.com