INSTALLATION & OPERATING INSTRUCTIONS

Raytherm™ Commercial Swimming Pool Heater

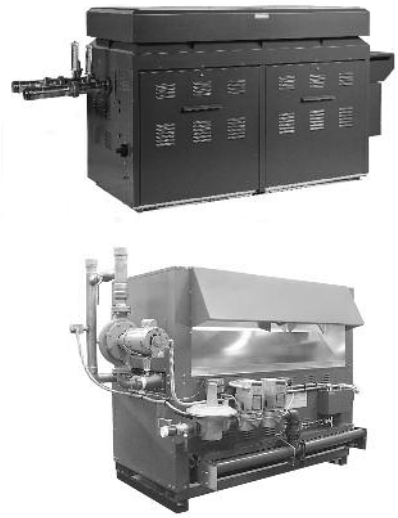

Models P-926 to P-1826 & P-2100 to P-4001

WARNING: If these instructions are not followed exactly, a fire or explosion may result causing property damage, personal injury or death.

FOR YOUR SAFETY: Do not store or use gasoline or other flammable vapors and liquids or other combustible materials in the vicinity of this or any other appliance. To do so may result in an explosion or fire.

WHAT TO DO IF YOU SMELL GAS:

- Do not try to light any appliance.
- Do not touch any electrical switch; do not use any phone in your building.
- Immediately call your gas supplier from a neighbor's phone. Follow the gas supplier's instructions.
- If you cannot reach your gas supplier, call the fire department.

Installation and service must be performed by a qualified installer, service agency or the gas supplier.

This manual should be maintained in legible condition and kept adjacent to the heater or in another safe place for future reference.

Raypak®
A Rheem® Company

CATALOG NO. 6200.51P Effective: 05-24-10 Replaces: 04-09-07 P/N 240251 Rev. 17

WATER CHEMISTRY
(Corrosive water voids all warranties)

For your health and the protection of your pool equipment, it is essential that your water be chemically balanced. The following levels must be used as a guide for balanced water.

Recommended Level(s)	Fiberglass Pools	Fiberglass Spas	Other Pool & Spa Types
Water Temp. (Deg. F)	68 to 88	89 to 104	68 to 104
pH	7.3 to 7.4	7.3 to 7.4	7.6 to 7.8
Total Alkalinity (PPM)	120 to 150	120 to 150	80 to 120
Calcium Hardness (PPM)	200 to 300	150 to 200	200 to 400
Salt (PPM)	**6000 MAXIMUM**	**6000 MAXIMUM**	**6000 MAXIMUM**
Free Chlorine (PPM)*	2 to 3	2 to 3	2 to 3
Total Dissolved Solids (PPM)	**3000 MAXIMUM**	**3000 MAXIMUM**	**3000 MAXIMUM**

*** Free Chlorine MUST NOT EXCEED 5 PPM!**

- Occasional chemical shock dosing of the pool or spa water should not damage the heater providing the water is balanced.
- Automatic chemical dosing devices and salt chlorinators are usually more efficient in heated water, unless controlled, they can lead to excessive chlorine level **which can damage your heater, and which is not covered under warranty**.
- Further advice should be obtained from your pool or spa builder, accredited pool shop, or chemical supplier for the correct levels for your water.

Rev. 17 reflects the following:
Changes to: General Specifications on page 5, Fig. 5 and Teflon tape caution on page 8, Fig. 6 on page 9, Water Pressure Switch and UG information on page 11, Table C on page 12, Fig. 20 on page 14, Low Water Cutoff information on page 19, wiring diagrams on pages 20, 21 and 23, pressure switch information on page 24, Warranty information on page 35
Additions: Water chemistry notes on page 2, Flow Switch description, Note, and Fig. 9 on page 10, Piping Configuration on page 15
Deletions: Figs. 39 and 40 on page 30, Illustrated Parts Lists, now available separately (Catalog No. 9100.65 for 926-1826 and 9100.70 for 2100-4001)

CONTENTS

WATER CHEMISTRY 2
WARNINGS 4
Pay Attention to These Terms 4
RECEIVING EQUIPMENT 5
GENERAL SPECIFICATIONS 5
INSTALLATION 5
Code Requirements 5
Base Installation 5
Clearances 6
Combustion Air (Indoor Units Only) 6
Venting Connections 7
Gas Supply Connections 8
Water Connections 10
CONTROLS 10
Flow Switch 10
Water Pressure Switch 11
Automatic Chlorinators and Chemical Feeders 11
Unitherm Governor Operation 11
Companion Flange Connections (Models 926-1223) 11
Mounting the Poolstat Control with Front-Mounted Loop Using Mounting Slots 12
Mounting Well into System Return Loop Pipe - Front-Mounted Loop 14
Piping Configurations for Raytherm Commercial Pool Heaters (926-1223) 15
Piping Configurations for Raytherm Commercial Pool Heaters (1287-1826) 16
Piping Configurations for Raytherm Commercial Pool Heaters (2100-4001) 17
Temperature Controls 18
External Auxiliary Bypass Valve (Where Required) Models 926-1223 Only 18
Auxiliary Bypass Valve Adjustment 18
Electrical Wiring 19
Wiring Diagram—Models 926–1223 20
Wiring Diagram—Models 1287–1826 21
Wiring Diagram—Models 2100–2500 22
Wiring Diagram—Models 3001–4001 23
SERVICING 24
General Location Of Controls 24
Temperature Control 24
Pressure Switch 24
Pressure Switch Adjustment 24
Two-Speed Pumps 25
Pilot Safety 25
START-UP PROCEDURES 25
Before Start-Up 25
Start-Up 25
After Start-Up 26
INSPECTION PROCEDURES 26
Burners 26
CONTROLS 26
SERVICING PROCEDURES 27
Tube Cleaning Procedure (Typical) 27
Heat Exchanger Reassembly 27
Burner Drawer Removal 27
Gas Valve Removal 27
Main Burner and Orifice Removal 28
Pilot Removal and Cleaning 28
Heat Exchanger Removal 28
Combustion Chamber Removal 29
Control Well Replacement 29
Tube Replacement Procedure 29
Procedure For Cleaning Flue Gas Passageways 29
Unitherm Governor Replacement 30
MAINTENANCE AND CARE 30
Winterizing Your Heater 31
TROUBLESHOOTING 32
WARRANTY 35

WARNINGS

Pay Attention to These Terms

DANGER:	Indicates the presence of immediate hazards which will cause severe personal injury, death or substantial property damage if ignored.
WARNING:	Indicates the presence of hazards or unsafe practices which could cause severe personal injury, death or substantial property damage if ignored.
CAUTION:	Indicates the presence of hazards or unsafe practices which could cause minor personal injury or product or property damage if ignored.
NOTE:	Indicates special instructions on installation, operation, or maintenance which are important but not related to personal injury hazards.

DANGER: Make sure the gas on which the heater will operate is the same type as that specified on the heater rating plate.

WARNING: Should overheating occur or the gas supply valve fail to shut, do not turn off or disconnect the electrical supply to the heater. Instead, shut off the gas supply at a location external to the heater.

WARNING - CALIFORNIA PROPOSITION 65: This product contains chemicals known to the State of California to cause cancer, birth defects or other reproductive harm.

WARNING: To minimize the possibility of improper operation, serious personal injury, fire, or damage to the heater:

- Always keep the area around the heater free of combustible materials, gasoline, and other flammable liquids and vapors.
- Heater should never be covered or have any blockage to the flow of fresh air to the heater.

WARNING: Do not use this heater if any part has been under water. Immediately call a qualified service technician to inspect the heater and to replace any part of the control system and any gas control which has been under water.

WARNING: Risk of electrical shock. More than one disconnect switch may be required to deenergize the equipment before servicing.

CAUTION: Operation of this heater in low-temperature systems requires special piping. Harmful internal condensation will occur if the inlet water temperature does not exceed 105°F. Warranty claims will be denied when condensation occurs.

CAUTION: If this heater is to be installed above radiation level, it must be provided with a low water cut-off device at the time of heater installation.

CAUTION: If this heater is to be installed in a negative or positive pressure equipment room, there are special installation requirements. Consult factory for details.

RECEIVING EQUIPMENT

On receipt of the equipment, visually check for external damage to the carton or the shipping crate. If the carton or shipping crate is damaged, make a note on the Bill of Lading and report the damage to the Carrier immediately. Remove the heater from the carton or shipping crate. Do NOT use the shipping base crate as an installation base.

On occasion, we ship some items loose. Be sure that you receive the number of packages indicated on the Bill of Lading. When ordering parts, you must specify Model and Serial Number of heater. When ordering under warranty conditions, you must also specify date of installation.

Raypak recommends that this manual be reviewed thoroughly before installing your Raypak Pool Heater. If there are any questions which this manual does not answer, please contact the factory or your local Raypak representative.

Claims for shortages and damages must be filed with carrier by consignee. Permission to return goods must be factory authorized and are subject to a stocking charge.

Purchased parts are subject to replacement only under the manufacturer's warranty. Debits for defective replacement parts will not be accepted and will be replaced in kind only per our standard warranties.

GENERAL SPECIFICATIONS

Models 962, 1125, 1223, 1336, 1468, 1631, 1826 & 2100 through 4001 are specifically designed for indoor installation ONLY. Models 926, 1083, 1178, 1287, 1414, 1571 & 1758 are specifically designed for outdoor installation ONLY. All heaters are standard with electronic ignition for both natural and propane applications. Heaters require 120V power supply. Control circuits operate at 24V, supplied by an internal 120V to 24V transformer.

These heaters are design certified and tested under the requirements of ANSI Z21.56 / CSA 4.7 American National Standard for Gas-Fired Pool Heaters. Rated inputs suitable for up to 2000 feet elevation. For elevations above 2000 feet, reduce input 4% for each 1000 feet above sea level, as high elevation reduces combustion performance.

INSTALLATION

These instructions are intended for the use of qualified personnel only, specifically trained and experienced in the installation of this type of heating equipment and related system components. Installation and service personnel may be required by some states to be licensed. If your state is such, be sure your contractor bears the appropriate license. Persons not qualified shall not attempt to fix this equipment nor attempt repairs according to these instructions.

WARNING: Improper installation, adjustment, alteration, service or maintenance may damage the equipment, create a hazard resulting in asphyxiation, explosion or fire, and will void the warranty.

Code Requirements

The heater should not be located in an area where possible water leakage will result in damage to the area adjacent to the appliance or to the structure. When such locations cannot be avoided, it is recommended that a suitable drain pan, adequately drained, be installed under the appliance. The pan must not restrict combustion air flow.

Installation must be in accordance with local codes, or, in the absence of local codes, with the latest editions of the National Fuel Gas Code, ANSI Z223.1/NFPA 54, and National Electrical Code, ANSI/NFPA 70.

Base Installation

Do NOT use the shipping base crate as an installation base. Heater must be mounted on a level base, such as cement slab, cement blocks or other non-combustible surface. An optional non-combustible base is available for Indoor Models 962 through 1826. An alternative method for providing a base for combustible floors as illustrated below. Heaters may not be installed on carpeting.

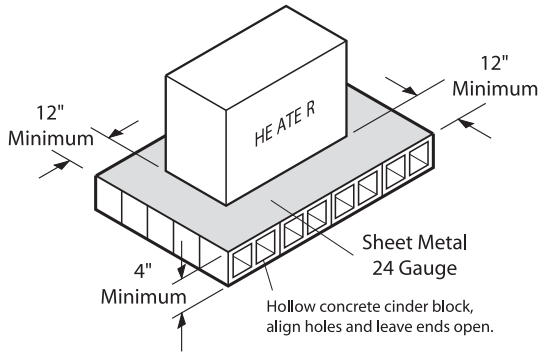

Fig. 1: Alternate Mounting Base

Clearances

All Heaters

For clearances from combustible surfaces, see Table A below. We require a minimal vertical clearance of three feet between the upper surface of the flue outlet to a noncombustible material.

Indoor Heaters		Outdoor Heaters (926–1758)	
Heater Side	**Clearance (Inches)**	**Heater Side**	**Clearance (Inches)**
Top	24	Top	24
Back	24	Back	24
Right Side	24	Right Side	24
Left Side	24	Left Side	24
Vent*	6		

*Vent includes factory supplied drafthood and does not include field supplied vent systems above the drafthood. On Models 2100-4001 drafthood is built into heater.
For servicing provide a front clearance as shown below:
Model 926/962-758/1826 - 24"
Model 2100-4001 - 48"

Table A: Minimum Clearances from Combustible Construction

For servicing, provide at least 24" in front of the heater on Models 926-1826 & 48" in front of the heater on Models 2100-4001 for burner tray removal, and at least 18" on the right side of the heater to inspect and delime the heat exchanger.

Outdoor Heaters (Models 926-1758)

These heaters are design certified for outdoor installation, when equipped with the approved top designated for outdoor use. Heaters must not be installed under an overhang of less than three (3) feet from the top of the heater. Three (3) sides must be open in the area under the overhang. Roof water drainage must be diverted away from heaters installed under overhangs with the use of gutters.

WARNING: The heater shall not be located in an area where water sprinklers, or other devices, may cause water to spray through the cabinet louvers and into the heater. This could cause heavy internal rusting or damage some electrical components, and this would void the warranty.

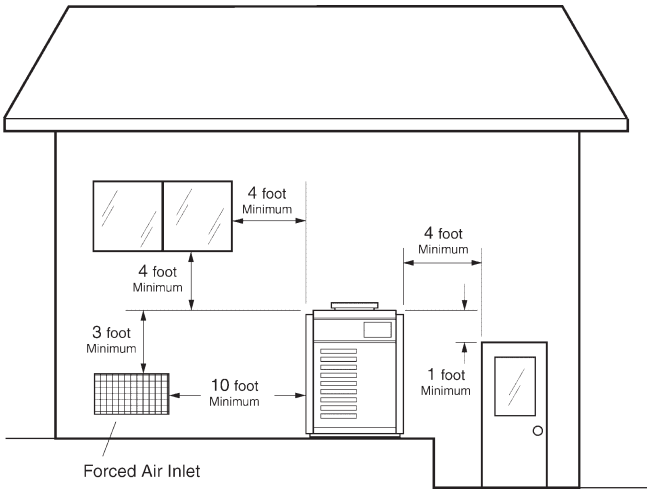

Fig. 2: Minimum Distance from Openings

The point from where the flue products exit the heater must be a minimum of four (4) feet below, four (4) feet horizontally from or one (1) foot above any door, window or gravity inlet to a building. The top surface of the heater shall be at least three (3) feet above any forced air inlet, or intake ducts located within ten (10) feet horizontally.

High Wind Conditions (Outdoor Units Only)

In areas where high winds are frequent, it may be necessary to locate the heater a minimum of 3' from high vertical walls, or install a wind break so the heater is not in direct wind current.

Indoor Heaters

The design is also certified for indoor installation when equipped with approved drafthood. Locate heater as close as practical to a chimney or gas vent.

Combustion Air (Indoor Units Only)

The heater must have both combustion and ventilation air. Openings must not be obstructed. Minimum requirements are as follows:

CAUTION: Combustion air must not be contaminated by corrosive chemical fumes which can damage the heater and void the warranty.

1. Free combustion air 1 sq. in. per 1000 BTU input within 12" of the **floor**.

2. Free ventilation air 1 sq. in. per 1000 BTU input within 12" of the **ceiling level**.

NOTE: If the room the heater is installed in is located against an outside wall and air openings communicate directly with the outdoors, the openings may be 1/4 the size specified above (ANSI Z223.1/NFPA 54, latest edition)

Venting Connections

Drafthood (Indoor) Models 962-1826

Locate and assemble as shown in Fig. 3. Secure with screws supplied in envelope in carton.

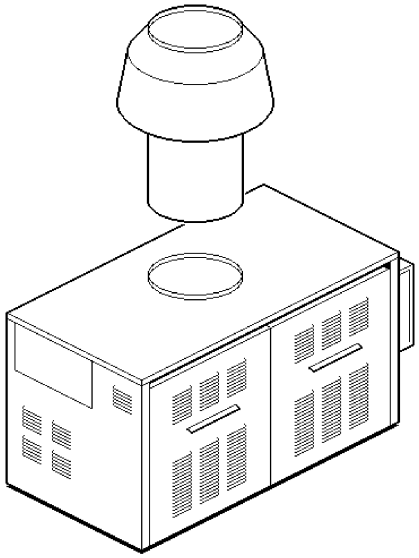

Fig. 3: Indoor Draft Hood

Models 2100-4001 have built-in drafthoods that must be properly vented to the outside.

Vent Piping

WARNING: Indoor heater requires a drafthood that must be connected to a vent pipe and properly vented to the outside. Failure to follow this procedure can cause fire or fatal carbon monoxide poisoning.

Vent piping the same size or larger than the draft hood outlet is recommended, however, when the total vent height is at least ten (10) feet (drafthood relief opening to vent terminal), the vent pipe size may be reduced as specified in the National Fuel Gas Code, ANSI Z223.1/NFPA 54 - latest edition. Avoid long horizontal runs of vent pipe and too many elbows. If installation requires horizontal or non-vertical runs, the vent pipe must have a minimum of 1/4 inch per foot rise and should be supported at not more than five foot intervals. Plumbers' tape, criss-crossed, will serve to space both horizontal and vertical piping.

Gas vents supported only by the flashing and extending above the roof more than five feet should be securely guyed or braced to withstand snow and wind loads. We recommend use of insulated vent pipe spacer through the roofs and walls.

For protection against rain or blockage by snow, the vent pipe must terminate with a vent cap which complies with the local codes or, in the absence of such codes, to the latest edition of the National Fuel Gas Code, ANSI Z223.1/NFPA 54.

The discharge opening must be a minimum of two feet vertically from the roof surface and at least two feet higher than any part of the building within ten feet. Vent stack shall be at least five feet in vertical height above the drafthood outlet. The vent cap location shall have a minimum clearance of 4 feet horizontally from, and in no case above or below, unless a 4-foot horizontal distance is maintained, from electric meters, gas meters regulators and relief equipment.

The weight of the vent stack or chimney must not rest on heater drafthood. Support must be provided in compliance with applicable codes. The heater top and draft hood must be readily removable for maintenance and inspection. Vent pipe should be adequately supported to maintain proper clearances from combustible construction.

Type "B" double wall or equivalent vent pipe is recommended. However, single wall metal vent pipe may be used as specified in the latest edition of the National Fuel Gas Code ANSI Z223.1/NFPA 54.

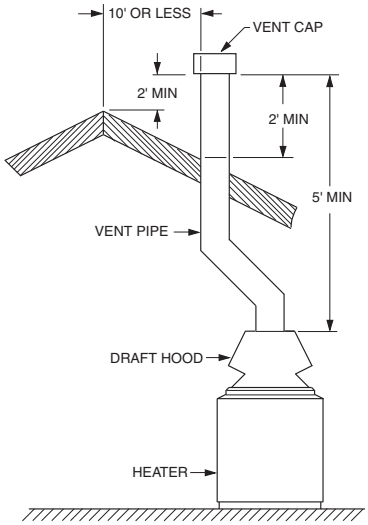

Fig. 4: Venting Clearances

At the time of removal of an existing heater, the following steps shall be followed with each appliance remaining connected to the common venting system placed in operation, while the other appliances remaining connected to the common venting system are not in operation.

(a) Seal any unused openings in the common venting system.

(b) Visually inspect the venting system for proper size and horizontal pitch and determine there is no blockage or restriction, leakage, corrosion and other deficiencies which could cause an unsafe condition.

(c) Insofar as is practical, close all building doors and windows and all doors between the space in which the appliances remaining connected to the common venting system are located and other spaces of the building. Turn on clothes dryers and any appliance not connected to the common venting system. Turn on any exhaust fans, such as range hoods and bathroom exhausts, so they will operate at maximum speed. Do not operate a summer exhaust fan. Close fireplace dampers.

(d) Place in operation the appliance being inspected. Follow the lighting instructions. Adjust thermostat so appliance will operate continuously.

(e) Test for spillage at the drafthood relief opening after 5 minutes of main burner operation. Use the flame of a match or candle, or smoke from a cigarette, cigar or pipe.

(f) After it has been determined that each appliance remaining connected to the common venting system properly vents when tested as outlined above, return doors, windows, exhaust fans, fireplace dampers and any other gas burning appliance to their previous conditions of use.

(g) Any improper operation of the common venting system should be corrected so the installation conforms with the latest edition of the National Fuel Gas Code, ANSI Z223.1/NFPA 54. When resizing any portion of the common venting system, the common venting system should be re-sized to approach the minimum size as determined using the appropriate tables in the National Fuel Gas Code, ANSI Z223.1/ NFPA 54.

For special venting applications that require reduced vent sizes and through the wall venting, the optional D Series Power Vent can be used. Consult the factory or your local Raypak representative.

Gas Supply Connections

Gas piping must have a sediment trap ahead of the heater gas controls, and a manual shut-off valve located outside the heater jacket. All gas piping should be tested after installation in accordance with local codes.

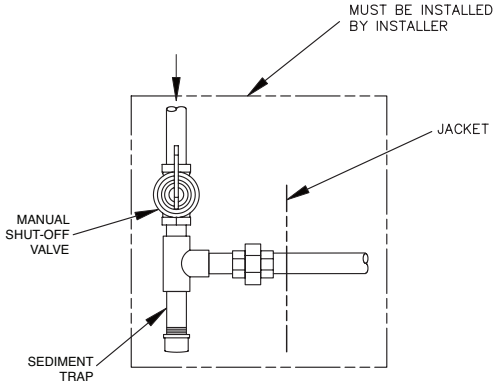

Fig. 5: Gas Piping

CAUTION: The heater and its manual shut-off valve must be disconnected from the gas supply during any pressure testing of that system at test pressures in excess of 1/2 psig (3.45 KPA). Dissipate test pressure in the gas supply line before reconnecting the heater and its manual shut-off valve to gas supply line. FAILURE TO FOLLOW THIS PROCEDURE MAY DAMAGE THE GAS VALVE. OVER PRESSURIZED GAS VALVES ARE NOT COVERED BY WARRANTY. The heater and its gas connections shall be leak tested before placing the appliance in operation. Use soapy water for leak test. DO NOT use open flame.

CAUTION: Do not use Teflon tape on gas line pipe thread. A pipe compound rated for use with natural and propane gases is recommended. Apply sparingly only on male pipe ends, leaving the two end threads bare.

A minimum of 7 in. WC and a maximum of 10.5 in. WC upstream pressure under load, and no load conditions must be provided for natural gas or a minimum of 11 in. WC and a maximum of 13 in. WC for propane gas.

Gas Pressure Regulator

The gas pressure regulator is preset and sealed at 4 in. WC for natural gas, and 11 in. WC for propane gas. Between the gas valve and the burners is a 1/8" pipe plug. The pressure at this point, taken with a manometer, should be about 3.7 in. WC natural gas and 10.5 in. WC propane gas. If an adjustment is needed, remove seal and turn adjustment screw clockwise ↻, to increase pressure or counter-clockwise ↺, to decrease pressure.

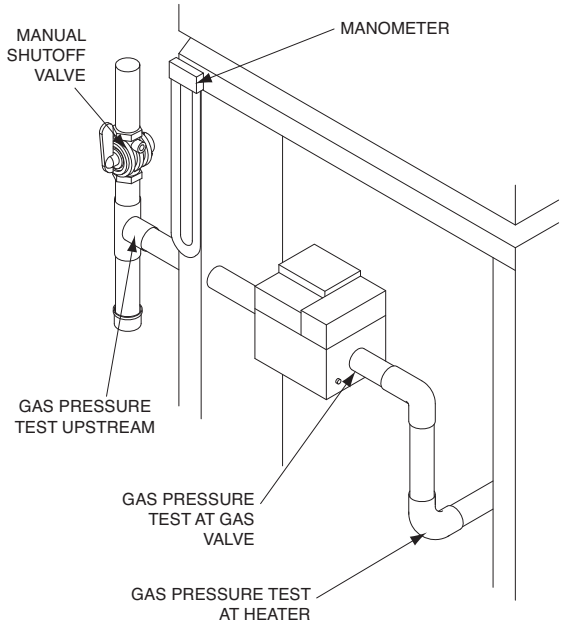

Fig. 6: Gas Pressure Test Points

Venting of Diaphragm Gas Components

Heaters with gas train components that have diaphragms in their construction are supplied with a bleed line connection that must be connected to the outside atmosphere as required by the National Fuel Gas Code. Under **NO** circumstances shall bleed lines terminate in the gas utilization equipment flue or exhaust system.

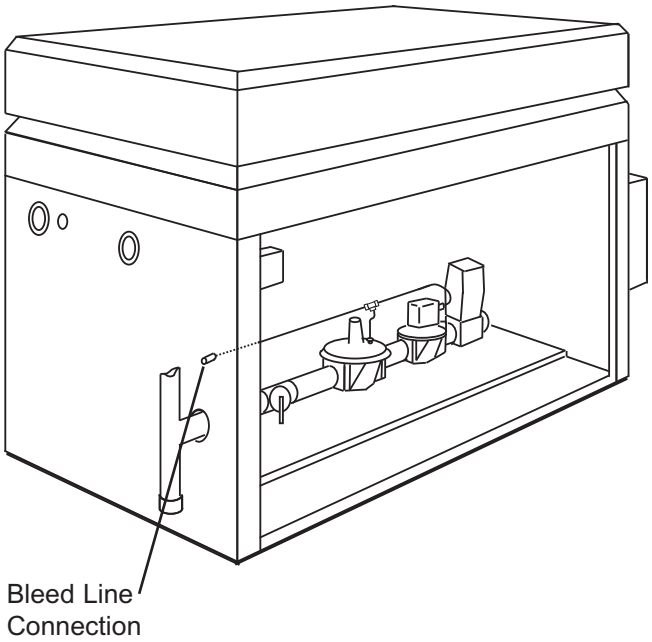

Fig. 7: Bleed Line Connection

Model No.	1”		1-1/4”		1-1/2”		2”		2-1/2”		3”		4”	
	N	P	N	P	N	P	N	P	N	P	N	P	N	P
926/962		15	20	45	45	110	150	360	400					
1083/1125		10	15	35	35	80	120	300	300					
1178/1223				25	25	60	85	220	200					
1287/1336				25	20	55	75	180	170	325	560			
1414/1468				20	15	45	65	150	165	300	500			
1571/1631				15	15	35	50	20	125	250	400			
1758/1826				15	10	30	40	100	100	225	340			
2100				10	10	25	30	80	75	175	260			
2500						15	20	55	55	135	160	400	600	
3001						10	15	35	40	85	120	250	500	
3500							10	30	30	45	80	200	400	600
4001							5	20	25	35	65	160	300	400

Natural Gas, 1000 BTU/FT^3 .60 Specific Gravity @ 0.5 in. WC Pressure Drop
Propane Gas, 2500 BTU/FT^3 1.53 Specific Gravity @ 0.6 in. WC Pressure Drop

Table B: Maximum Equivalent Pipe Length

Water Connections

Location

The heater requires water flow and positive pressure to fire and operate properly. It must therefore be installed downstream of the discharge side of the filter pump. A typical installation is plumbed as follows:

1. The inlet side of the filter is plumbed directly to the discharge side of the filter pump;

2. The outlet side of the filter is then plumbed to the inlet of the heater; and

3. The outlet of the heater is plumbed to the return line to the pool or spa. The pump, filter and heater are thus plumbed in series.

Heater must be located so that any water leaks will not damage the structure of adjacent area. High temperature plastic pipe (CPVC) may be connected directly into the heater Models 926-1223, if local codes permit and if controls operate the pump for at least fifteen minutes after the heater is turned off.

CAUTION (Models 926-1223): NEVER install PVC directly into heater. Four feet of copper or high temperature pipe and two elbows are required between the heater and the PVC connections. See Fig. 8 below.

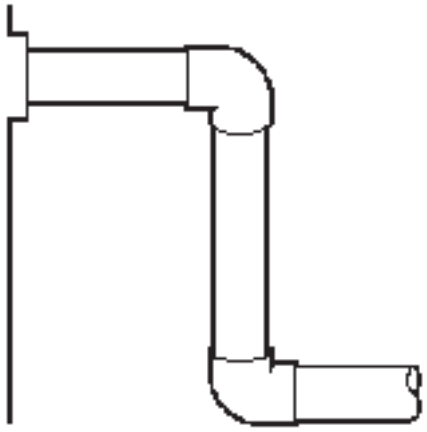

Fig. 8: Plumbing

When local codes permit the use of less than four feet high temperature piping or two elbows, provisions should be made to always shut the heater off a minimum of 15 minutes prior to pump shut down in order to carry away residual heat and prevent damage to the low temperature piping. A fireman switch included in the time clock may be used for this purpose with instructions not to override this sequence manually. See wiring diagram section for electrical hookup location of the fireman switch in the electrical circuit.

NOTE: (Models 926-1223): If piping is used into the heater, this piping (copper) must be anchored or screwed into the flange (metal) if operating pressures above 30 PSI are encountered.

CONTROLS

Flow Switch

This dual purpose control shuts off the boiler in the case of a pump failure or low water condition. It is mounted and wired in series to the main gas valve. Standard on all models.

NOTE: Flow switch will not operate if flow is less than:

Models 926-1223	60 gpm
Models 1287-1826	85 gpm
Models 2100-4001	180 gpm

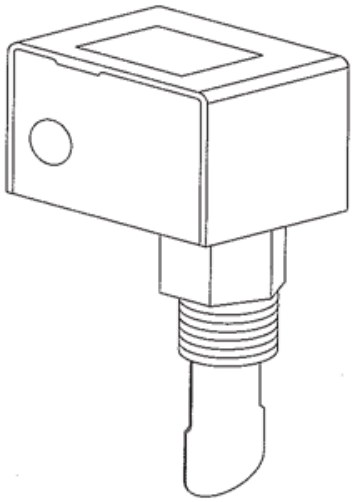

Fig. 9: Flow Switch

Water Pressure Switch

On Models 926-1223 built with a Unitherm Governor (UG), a water pressure switch is provided in the heater to shut down the gas valves in the event the water supply to the heater is interrupted. It is very important to verify that the switch electrically opens and shuts off the gas valve when water flow to the heater is interrupted.

Otherwise, rapid and severe damage to the heater will likely occur. (The water pressure switch should be checked and adjusted for proper operation by a qualified service person at the time of installation and periodically checked thereafter. Refer to pressure switch servicing instructions in this manual).

WARNING: Operation of the heater without water circulation will cause rapid and severe damage to the heater.

Automatic Chlorinators and Chemical Feeders

All chemicals must be introduced and completely diluted into the pool or spa water before being circulated through the heater. Do not place chlorine tablets or bromine sticks in the skimmer. High chemical concentrations will result when the pump is not running (eg, overnight).

Chlorinators must feed downstream of the heater and have an anti-siphoning device to prevent chemical backup into the heater when the pump is shut off.

NOTE: High chemical concentrates from feeders and chlorinators that are out of adjustment will cause very rapid corrosion to the heat exchanger in the heater. Such damage is not covered under the warranty.

Unitherm Governor Operation

The patented Unitherm Governor (UG) is a thermostatic mixing valve specifically designed to maintain constant heater internal temperature between 105° and 115°F despite continually changing flow rates from the filter and changing pool temperatures. This narrow range is needed to prevent damaging condensation on the burners which will occur if the heater runs for any length of time below 105°F. It is also needed to inhibit scale formation in the tubes by maintaining temperatures well below accelerated scaling temperatures.

The Unitherm Governor is an available option on models 926 through 1223. Where installed, it is built into the inlet/outlet header. The larger sizes, models 1287 through 4001, do not have a UG option. Instead, they have an externally mounted bypass pump that is designed to maintain the water entering the heater at the proper temperature to prevent condensation and scale. Thermometers are provided on the inlet and outlet to the heater.

Companion Flange Connections (Models 926-1223)

DO NOT use petroleum base assembly fluids (such as Petroleum Jelly or Lubricating Oil). If assembly lube is required use a silicone base such as Armoral etc.

The inlet/outlet header flange accepts a 2" copper tube as a slip connection directly into the header. The flange is also threaded for a 2" NPT copper male adapter.

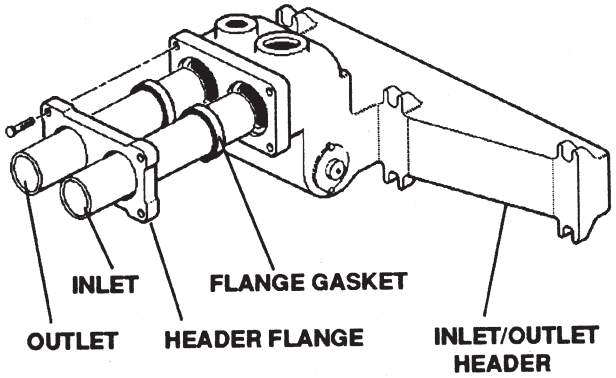

Fig. 10: Companion Flange Connections (Models 926–1223)

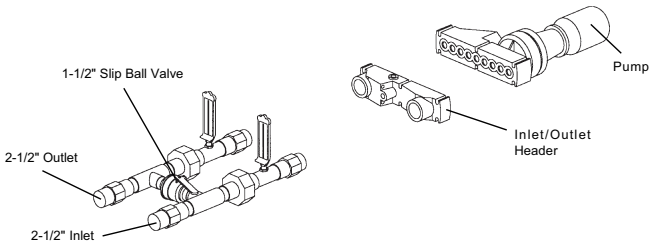

Fig. 11: Companion Flange Connections (Models 1287/1336–1758/1826)

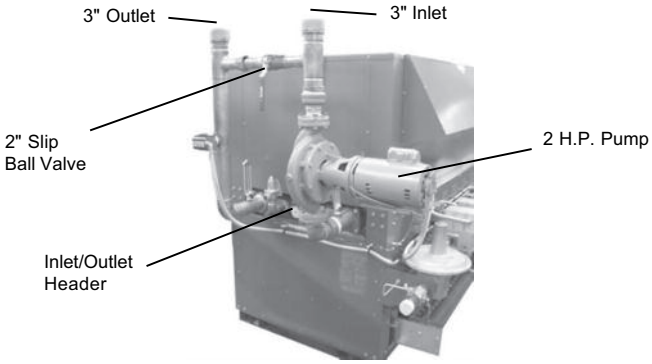

Fig. 12: Companion Flange Connections (Models 2100–4001)

Model No.	Connection Size	Minimum gpm	Maximum gpm
926–1223	2” FPT	60	120
1287–1826	2-1/2” FPT	Refer to Table D	
2100–4001	3” FPT		

Table C: Water Connections

Model No.	Loop* Flow Rates (gpm)	Heater Flow Rates (gpm)
1287/1336	30–50	85
1414/1468	35–55	85
1571/1631	40–65	85
1758/1826	45–70	85
2100	50–80	180
2500	60–95	180
3001	75–115	180
3500	90–135	180
4001	100–150	180

*Loop is secondary piping to heater from main system.

Table D: Flow Rates

Raypak recommends the installation of an air bleed vent at a suitable location (usually the highest point in the plumbing) to remove air from the piping system. These units should be available at your local wholesale supplier. Raypak does not provide this item.

CAUTION: Power to the heater should be interlocked with the main system pump to make sure the heater does not fire without the main system pump in operation. Improper flow control can damage the heater. Uncontrolled flow (too high) or restricted flow (too low) can seriously affect heater operation. Follow these instructions to make sure your heater is properly installed.

Models 1287 through 4001 are equipped with an external pump and bypass arrangement that blends outlet water with the inlet to increase the inlet water temperature, thereby reducing the likelihood of condensation forming on the heat exchanger. The pump also serves to circulate water through the heater from the main system piping.

To complete the installation of the pool heater, the pool thermostat needs to be installed in the main return water line. This will ensure that the heater will be energized at the right time. If the main water line is too far away from the heater and the capillary bulb will not reach it, locate the pool thermostat adjacent to the main line and run wires back to the heater. Follow the instructions listed below to install the poolstat.

Mounting the Poolstat Control with Front-Mounted Loop Using Mounting Slots

For heater models:
1287, 1336, 1414, 1468, 1571, 1631, 1758, 1826, 2100, 2500, 3001, 3500, 4001.

NOTE: For more detail on piping, refer to the diagrams on pages 15, 16 & 17.

1. Remove the poolstat control cover by removing the two cover screws at the top. See Fig. 13 & 14.

Fig. 13: Poolstat Control

Fig. 14: Control Cover

2. Lace metal strapping or clamps, (NOT PROVIDED) through the ¾" slots on the cover and fasten securely to pipe as shown in Fig. 15 & 16. Do not over-tighten clamps.

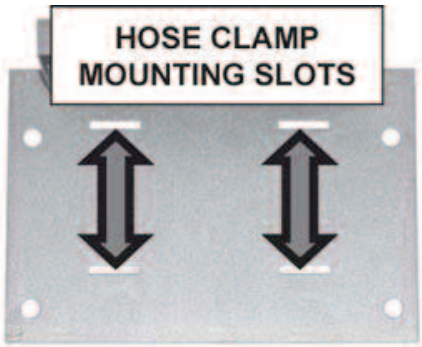

Fig. 15: Hose Clamp Slots

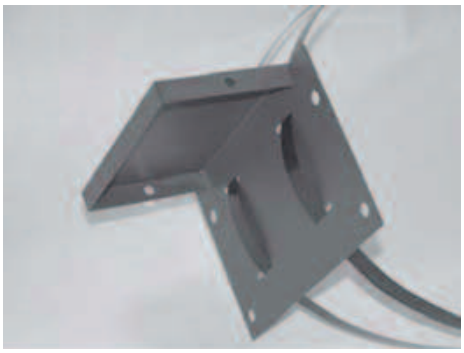

Fig. 16: Insert Clamps

3. Remove either the left or right "knock-out" for wiring on the poolstat control as shown in Fig. 17.

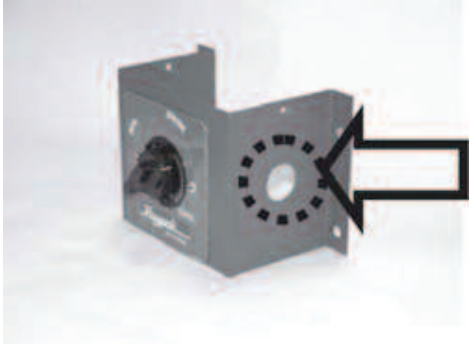

Fig. 17: Remove Knockout

4. Attach appropriate conduit and connectors to the poolstat control.

5. Attach wires to the poolstat wire terminals. See Fig. 18.

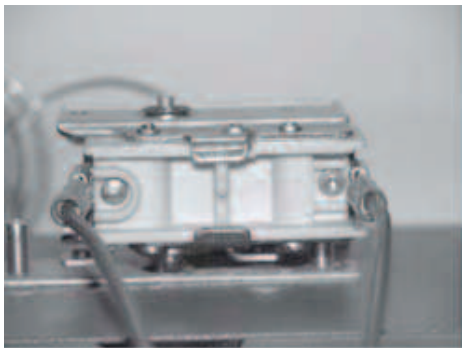

Fig. 18: Attach Wires

6. Install poolstat control to the cover and fasten cover screws.

7. Poolstat should be mounted level as shown in Fig. 19.

Fig. 19: Mount Level

Mounting Well into System Return Loop Pipe - Front-Mounted Loop

NOTE: For more detail on piping configurations for large systems, refer to the diagrams on pages 15, 16 & 17.

1. Locate and mark an area on the main system return loop pipe where the well is always exposed to the water circulating back from the pool. See Fig. 20.

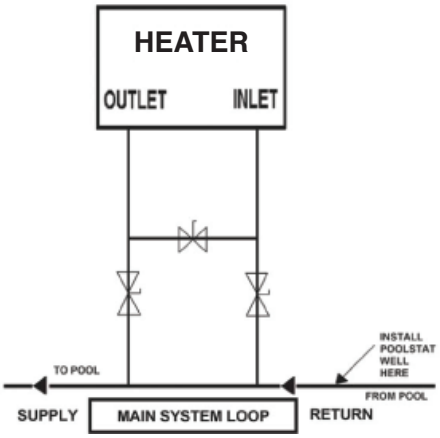

Fig. 20: Installation Location

2. Shut off water and drain any water from the pipe as necessary.

3. Drill a 23/32" diameter hole (½" NPT) into the pipe as shown in Fig. 21.

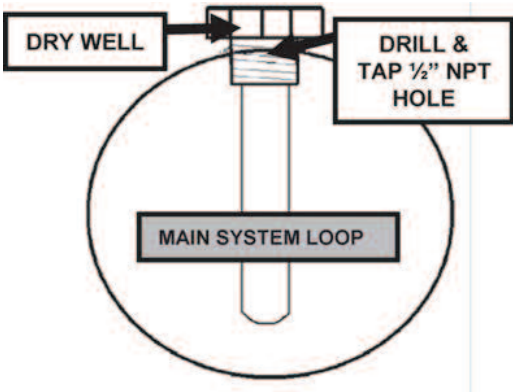

Fig. 21: Drill Hole in Pipe for Dry Well

4. Using a ½" NPT tap and appropriate handle, thread the tap into the pipe.

5. Apply pipe dope as necessary to male threads of well and insert into threaded hole. Do not over-tighten well.

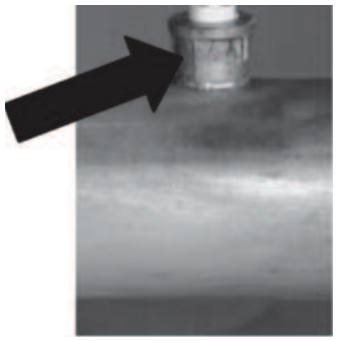

Fig. 22: Installation with Weld O Lets

NOTE: The drawings and instructions above show only one of several acceptable ways of installing the dry well into main system loop. The use of saddle clamps and "Weld O Lets" (shown in Fig. 22) are acceptable. Follow clamp manufacturer's instructions.

To adjust the temperature:

1. Both isolation valves must be fully open.

2. Adjust Bypass Valve "A" 1/2 open and Balancing Valve "B" fully open. (See piping configuration page 15, 16 & 17)

3. Fire your Raypak pool heater and adjust Bypass Valve "A" to obtain a heater inlet temperature approximately 105°F. Turning Valve A in the open direction will raise the heater inlet temperature and closing Valve "A" will lower the heater inlet temperature.

CAUTION: The inlet water temperature must be kept above 105°F. Changes in system flow or valve position may require re-adjustment of the flow settings. Check the heater bypass settings after making adjustments. Failure to maintain an inlet temperature above 105°F may result in damage to the heater. Failure to comply with this instruction voids the warranty.

4. If the heater inlet temperature remains less than 100°F and Valve "A" is fully open, leave Valve "A" fully open and throttle Valve "B" until the heater inlet temperature rises above 105°F.

5. The resultant heater outlet temperature should be in the range of 120-130°F.

6. As the pool temperature rises to the desired temperature as controlled by the Pool aquastat, small adjustments to valves "A" and "B" will be required for optimum performance. Heater temperatures should be checked regularly to prevent heater condensation. The heater inlet temperature can be higher than 105°F without heater damage but operating at less than 105°F inlet can cause damage from condensation.

NOTE: Consult factory if target temperatures cannot be achieved.

Piping Configurations for Raytherm Commercial Pool Heaters

MINIMUM PIPE SIZES		
	BRANCH	MAIN
926–1223	2–1/2"	3"

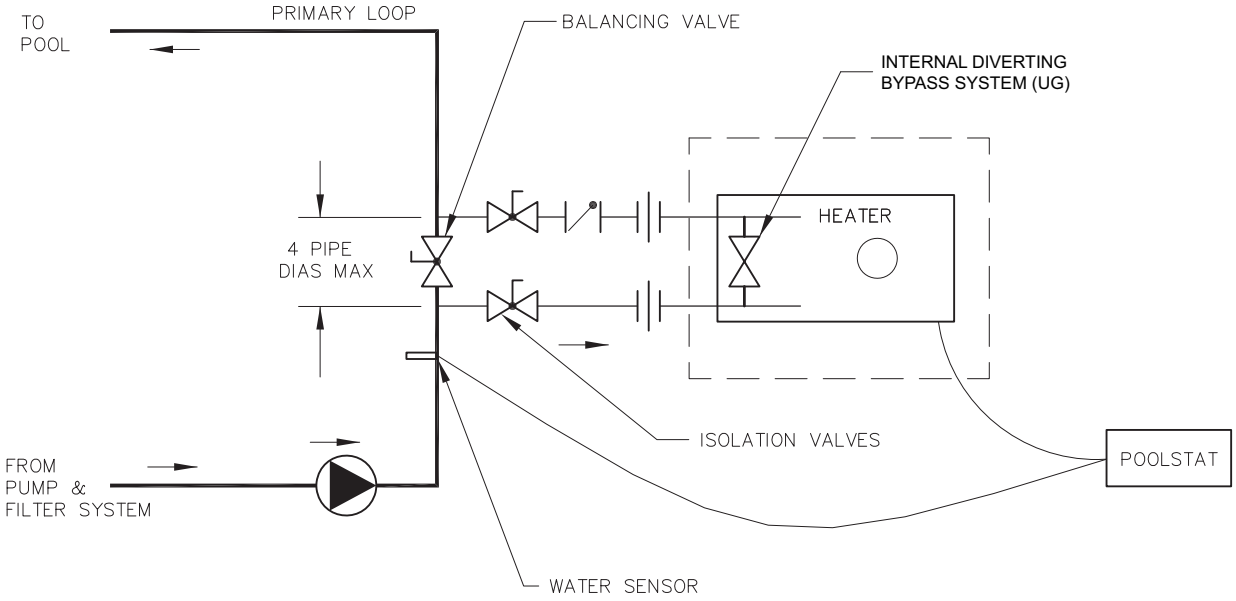

Models 0926 thru 1223 with UG

NOTES:

1. PLUMB SWING CHECK VALVE IN GRAVITY–CLOSED POSITION.
2. PIPE ALL RELIEF VALVES TO DRAIN, OR AS LOCAL CODES REQUIRE.
3. MINIMUM PIPE SIZE MUST BE EQUAL TO THE BOILER INLET/ OUTLET SIZE. SEE "MINIMUM PIPE SIZES" CHART ABOVE.

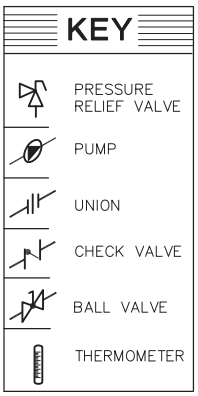

Piping Configurations for Raytherm Commercial Pool Heaters

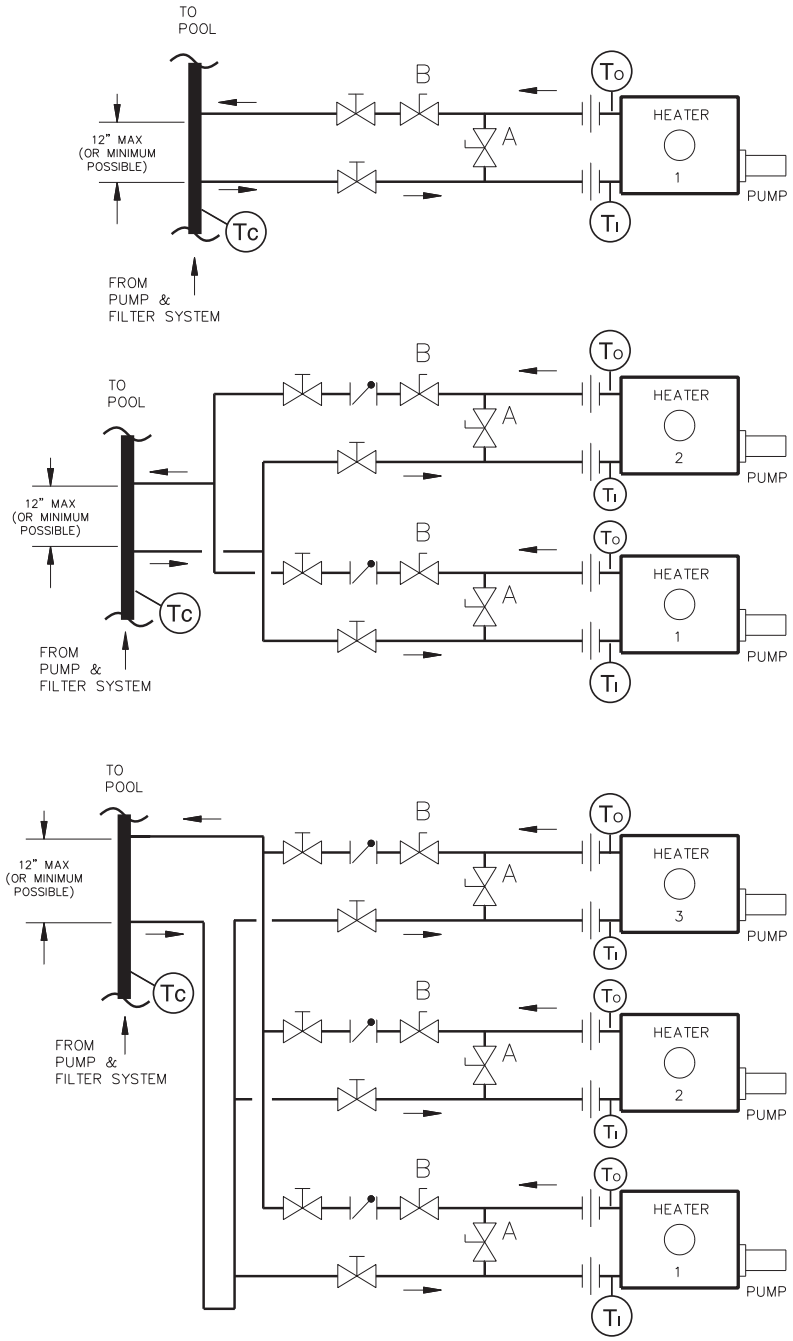

Models 1287 thru 1826

Ti BLENDED WATER TEMPERATURE (THERMOMETER AT HEATER INLET)

To HEATER OUTLET TEMPERATURE THERMOMETER

Tc HEATER THERMOSTAT

RECOMMENDED FIELD INSTALLED ISOLATION VALVES FOR SERVICE

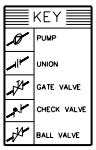

NOTES:

1. PLUMB SWING CHECK VALVE IN GRAVITY CLOSED POSITION.
2. PIPE ALL RELIEF VALVES TO DRAIN, OR AS LOCAL CODES REQUIRE.
3. MINIMUM PIPE SIZE MUST BE EQUAL TO THE HEATER INLET/ OUTLET SIZE EXCEPT WHERE PIPES HOLD FLOW FOR MORE THAN ONE HEATER. FOR TWO HEATERS INCREASE COMMON PIPE SIZE BY ONE, FOR THREE HEATERS, INCREASE COMMON PIPE SIZE BY TWO.

Piping Configurations for Raytherm Commercial Pool Heaters

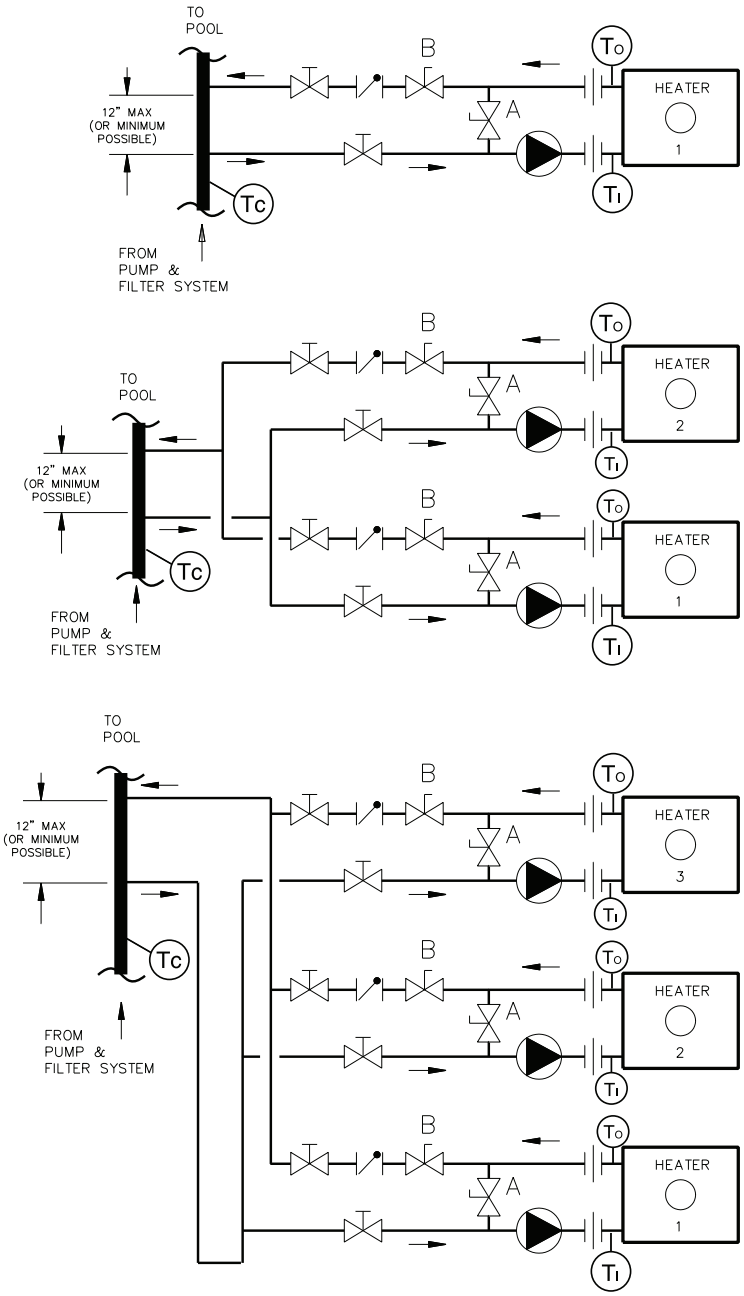

Models 2100 thru 4001

Ti BLENDED WATER TEMPERATURE (THERMOMETER AT HEATER INLET)

To HEATER OUTLET TEMPERATURE THERMOMETER

Tc HEATER THERMOSTAT

RECOMMENDED FIELD INSTALLED ISOLATION VALVES FOR SERVICE

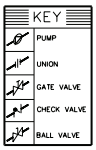

NOTES:

1. PLUMB SWING CHECK VALVE IN GRAVITY CLOSED POSITION.
2. PIPE ALL RELIEF VALVES TO DRAIN, OR AS LOCAL CODES REQUIRE.
3. MINIMUM PIPE SIZE MUST BE EQUAL TO THE HEATER INLET/ OUTLET SIZE EXCEPT WHERE PIPES HOLD FLOW FOR MORE THAN ONE HEATER. FOR TWO HEATERS INCREASE COMMON PIPE SIZE BY ONE, FOR THREE HEATERS, INCREASE COMMON PIPE SIZE BY TWO.

External Auxiliary Bypass Valve (Where Required) 926-1223 Models Only

An auxiliary bypass valve should be used when flow rates exceed 120 gpm (usually a high performance pump size larger than two HP will exceed this flow rate). This valve is required to complement the function of the automatic bypass valve, particularly when starting the heater in winter or early spring when the spa or pool temperature is below 55°F. It also serves to eliminate needless pressure drop through the heater and accompanying reduction in the flow rate to the spa jets, etc.

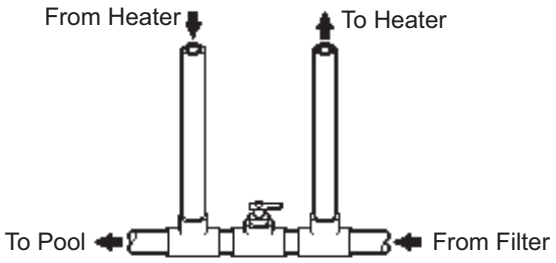

Fig. 23: Auxiliary Bypass Valve

Auxiliary Bypass Valve Adjustment

To set bypass: With clean filter, adjustment is made by feeling the inlet and outlet pipes at the heater. Outlet pipes should be slightly warmer than inlet and comfortable to the touch. If pipe is hot, close bypass; if cold, open bypass.

NOTE: Do not use a gate valve as an auxiliary bypass valve on any heaters.

Models 926-1223

The heater is also equipped with a manual bypass built into the header. This is in addition to the automatic bypass valve. This may be used with flow rates up to 120 gpm and adjusted as below.

NOTE: Sooting or liming caused by improper bypass adjustment voids the warranty.

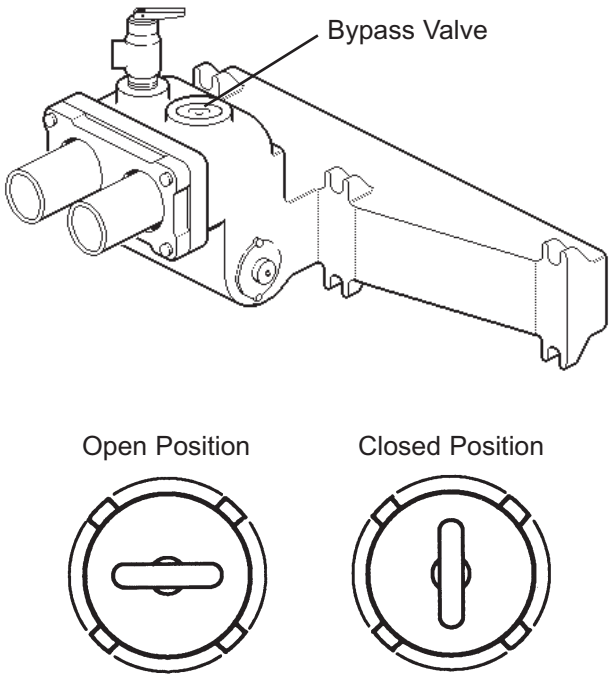

Fig. 24: Manual Bypass Valve

NOTE: To avoid water damage or scalding due to valve operation, drain pipe must be connected to valve outlet and run to a safe place of discharge. Drain pipe must be the same size as the valve discharge connection throughout its entire length and must pitch downward from the valve. No shut-off valve shall be installed between the relief valve and the drain line. Valve lever should be tripped at least once a year to ensure that waterways are clear.

Temperature Controls

High Limits

The pool heater is equipped with two high limits. Both high limits, the non-adjustable auto reset high limit and adjustable manual reset high limit are attached to the outlet side of the in/out header.

Pool Stat

The pool heater is equipped with a pool thermostat that is attached to the inlet side of the in/out header to control the pool temperature.

Low Water Cutoff

Automatically shuts down burner whenever water level drops below probe. A 3 to 5 second time delay prevents premature lockout due to temporary conditions such as power failure or air pockets. Standard on Cal Code heaters.

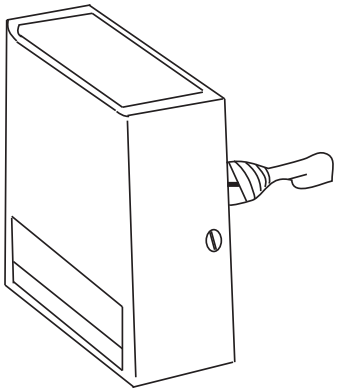

Fig. 25: Low Water Cutoff

High & Low Gas Pressure Switches

Pressure switches sense either high or low gas pressure and automatically shut down burners if abnormal pressures exist. Standard on Models 3001-4001.

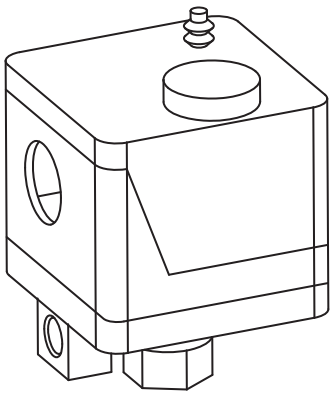

Fig. 26: High/Low Gas Pressure Switch

Electrical Wiring

DANGER - SHOCK HAZARD - Make sure electrical power to the heater is disconnected to avoid potential serious injury or damage to components.

CAUTION: Label all wires prior to disconnection when servicing controls. Wiring errors can cause improper and dangerous operation. Verify proper operation after servicing.

NOTE: If it is necessary to replace any of the original wiring, it must be replaced with 105° C wire or its equivalent.

Electronic Ignition

The intermittent ignition device conserves energy by automatically extinguishing the pilot when desired temperature is reached. When additional heat is needed, the pilot re-ignites electrically, eliminating the fuel costs of maintaining a constant pilot. To ensure safe operation, the gas valve cannot open until the pilot relights and is confirmed.

Model	Without Lockout		With Lockout	
	N	P	N	P
926–1826	Standard	N/A	Optional	Standard
2100–4001	N/A	N/A	Standard	Standard

Table E: Lockout Availability

Heater must be electrically grounded and bonded in accordance with local codes, or, in the absence of local codes, with the latest edition of the National Electrical Code, ANSI/NFPA 70.

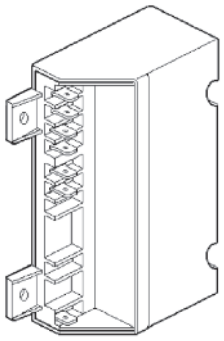

Fig. 27: Ignition Module

Wiring Diagram—Models 926–1223

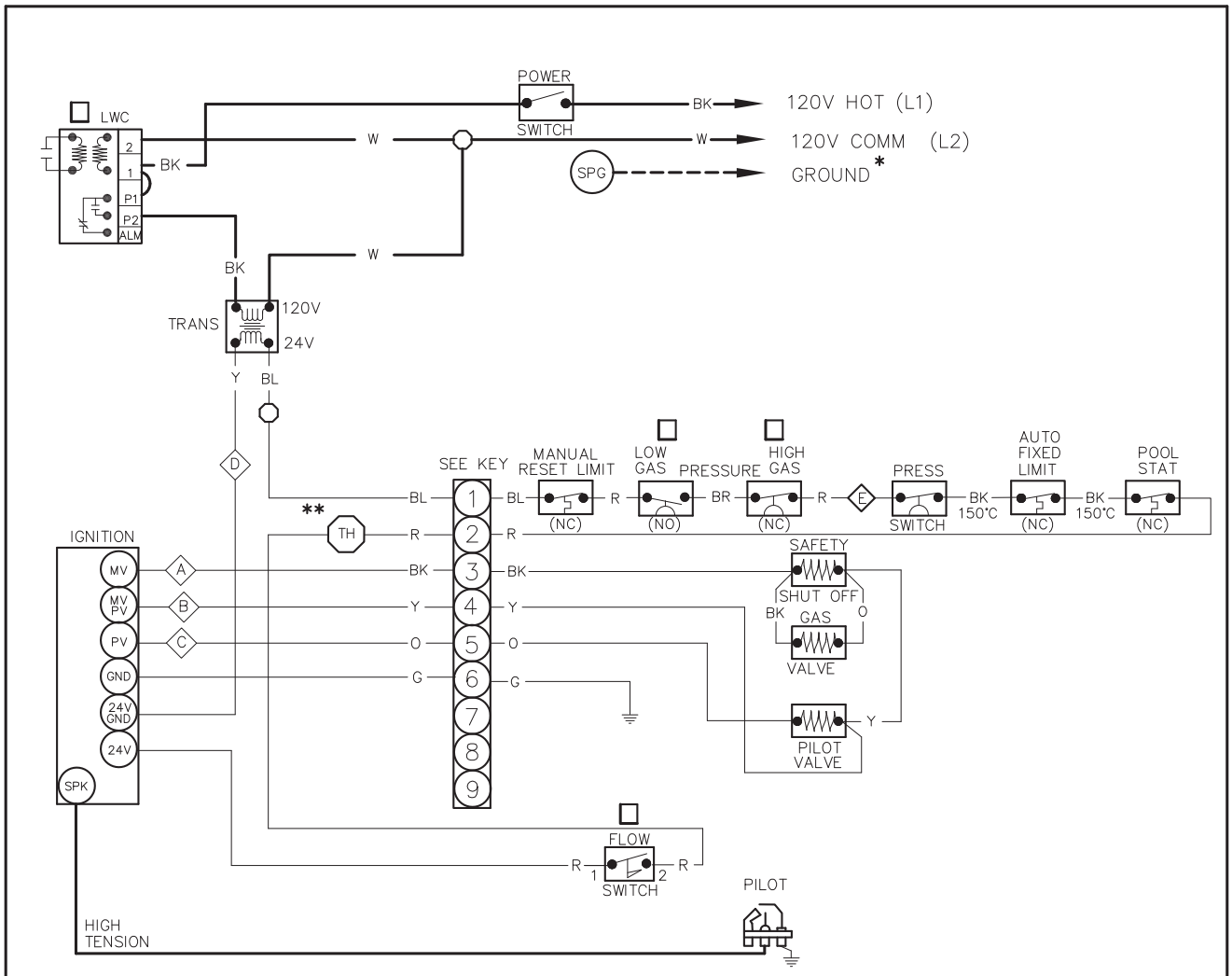

KEY

- LOW VOLTAGE
- FIELD INSTALL
- LINE VOLTAGE
- FIELD INSTALL
- WIRE NUT
- GROUND

BK – BLACK
BR – BROWN
R – RED
O – ORANGE
Y – YELLOW
G – GREEN
BL – BLUE
V – VIOLET
W – WHITE

- CONNECTION
- THERMOSTAT

PLUG (ACTUAL)

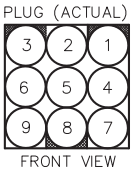

FRONT VIEW

NOTES: * **USE GROUND CONNECTION PROVIDED. FAILURE TO PROVIDE PROPER GROUND MAY RESULT IN LOCK–OUT ALL GROUND ⏚ TERMINATE AT (SPG).**

** USE (TH) CONNECTION FOR FIREMAN SWITCH HOOKUP

(A) — (E) CONNECTIONS FOR OPTIONAL E–4 ALARM PANEL.

☑ CHECK CONTROLS PROVIDED (WIRED AS SHOWN)
REPLACE WIRING WITH 105°C WIRE OR 150°C WIRE AS NOTED

APPROVED BY:	
CHECKED BY:	
ORIG E.O. 2101	
05/15/86	
CHG E.O. 4304	
08/06/08	
Raypak	

WIRING DIAGRAM IID
FIRING MODE – ON/OFF

INPUTS: 926,000 THRU 1,223,000 BTUH

SIZE: 926–1223 | TYPE: P

152103 | 10

Wiring Diagram—Models 1287–1826

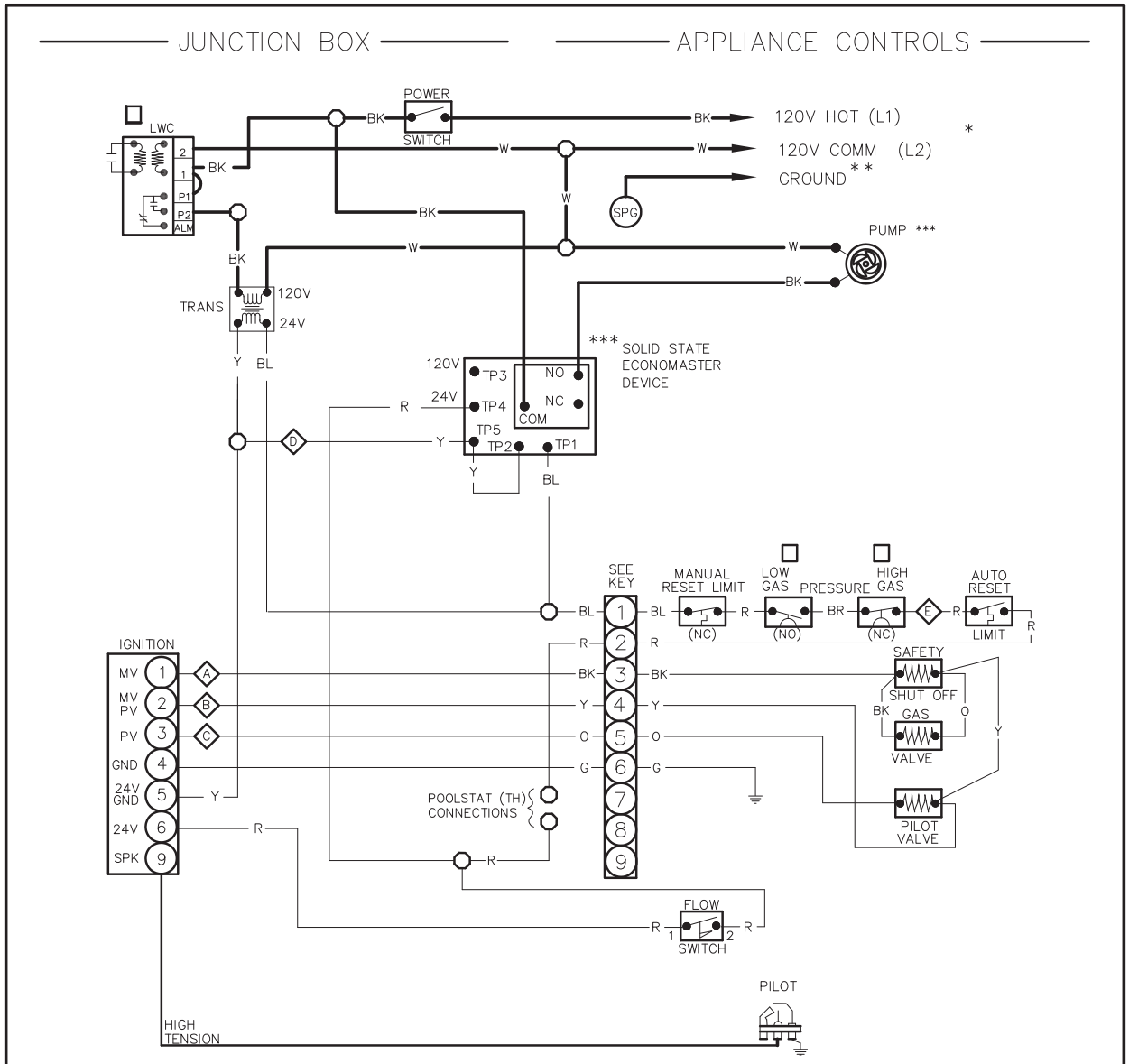

NOTES:

* POWER TO APPLIANCE MUST BE INTERLOCKED WITH MAIN SYSTEM FILTER PUMP.

** **USE GROUND CONNECTION PROVIDED. FAILURE TO PROVIDE PROPER GROUND MAY RESULT IN LOCK-OUT ALL GROUND ⏚ TERMINATE AT (SPG).**

*** PUMP USED MUST BE RATED AT 10 AMPS MAX OR 3/4 HP MAX. PUMP DELAY ADJUSTABLE BETWEEN 3–10 MINUTES.

(A)-(E) CONNECTIONS FOR OPTIONAL E–4 ALARM PANEL.

☑ CHECK CONTROLS PROVIDED (WIRED AS SHOWN)

IF ANY OF THE ORIGINAL WIRE AS SUPPLIED MUST BE REPLACED, IT MUST BE REPLACED WITH ITS EQUIVALENT, 105°C OR 150°C AS NOTED.

KEY

- LOW VOLTAGE
- FIELD INSTALL
- LINE VOLTAGE
- FIELD INSTALL
- WIRE NUT
- (SPG) GROUND
- BK – BLACK
- BR – BROWN
- R – RED
- O – ORANGE
- Y – YELLOW
- G – GREEN
- BL – BLUE
- V – VIOLET
- W – WHITE

PLUG (ACTUAL)

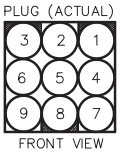

FRONT VIEW

CHECKED BY:			
APPROVED BY:			
ORIG E.O. 3171			
3/23/98			
CHG E.O. 4249	WIRING DIAGRAM IID/ECONOMASTER FIRING MODE – ON/OFF		
7/18/08			
Raypak	INPUTS: 926,000 THRU 1,826,000 BTUH		
	SIZE: 926–1826	TYPE: P	152403 4

Wiring Diagram—Models 2100–2500

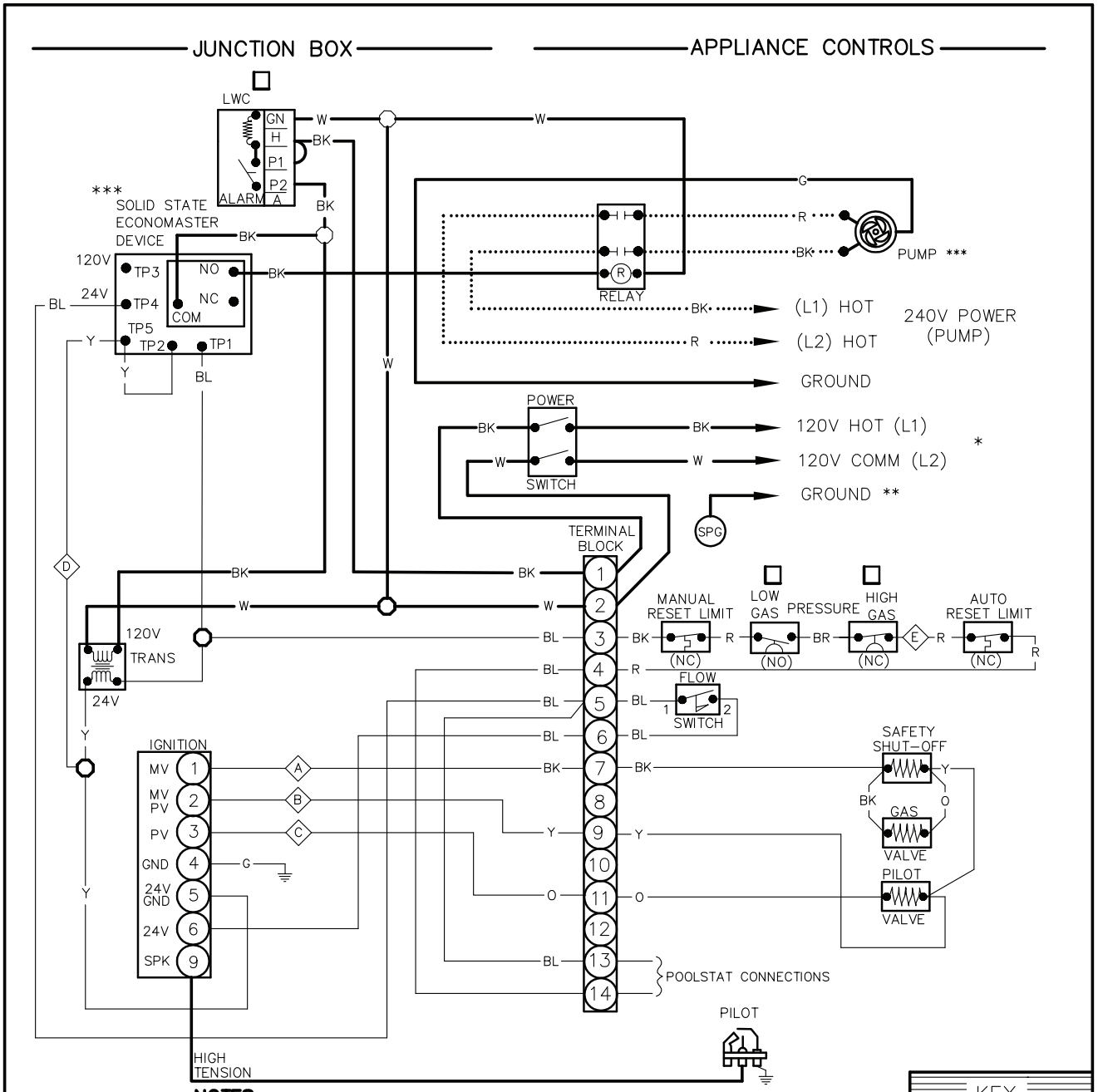

NOTES:

* POWER TO APPLIANCE MUST BE INTERLOCKED WITH MAIN SYSTEM FILTER PUMP.

** **USE GROUND CONNECTION PROVIDED. FAILURE TO PROVIDE PROPER GROUND GROUND MAY RESULT IN LOCK-OUT. ALL GROUND ⏚ TERMINATE AT (SPG).**

*** PUMP USED MUST BE RATED AT 10 AMPS MAX OR 3/4 HP MAX. PUMP DELAY ADJUSTABLE BETWEEN 3–10 MINUTES.

(A) - (E) CONNECTIONS FOR OPTIONAL E-4 ALARM PANEL.

☑ CHECK CONTROLS PROVIDED (WIRED AS SHOWN)

IF ANY OF THE ORIGINAL WIRE AS SUPPLIED MUST BE REPLACED, IT MUST BE REPLACED WITH ITS EQUIVALENT, 105°C OR 150°C AS NOTED.

KEY

- 24V 105°C
- 120V 105°C
- 120V 150°C
- 240V 105°C
- WIRE NUT
- (SPG) GROUND

BK – BLACK
BR – BROWN
R – RED
O – ORANGE
Y – YELLOW
G – GREEN
BL – BLUE
V – VIOLET
W – WHITE

CHECKED BY:	
APPROVED BY:	
ORIG E.O.	3180
	12/13/99
CHG E.O.	3560
	9/29/06

Raypak

WIRING DIAGRAM IID ECONOMASTER
FIRING MODE: ON/OFF

INPUTS: 2,100,000 THRU 2,499,000 BTUH

SIZE: 2100–2500 | TYPE: P | 152456 | 2

Wiring Diagram—Models 3001–4001

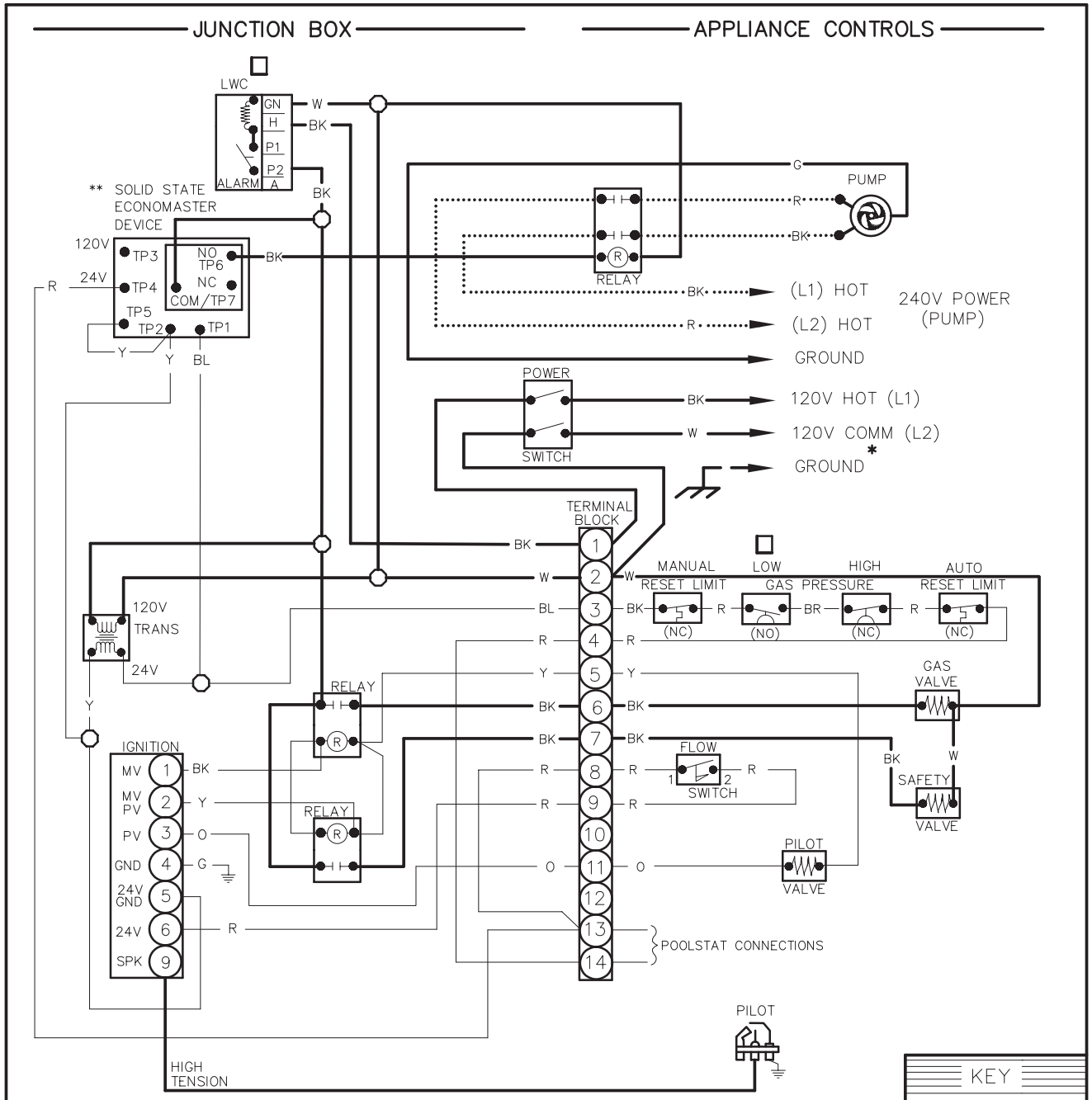

NOTES:

POWER TO APPLIANCE MUST BE INTERLOCKED WITH MAIN SYSTEM FILTER PUMP.

* **USE GROUND CLIP PROVIDED. FAILURE TO PROVIDE PROPER GROUND MAY RESULT IN LOCK-OUT**

** PUMP DELAY ADJUSTABLE BETWEEN 3–10 MINUTES.

☑ CHECK CONTROLS PROVIDED (WIRED AS SHOWN)

REPLACE WIRING WITH 105°C WIRE ONLY

KEY

- 24V
- 240V
- 120V
- 120V FIELD WIRE
- WIRE NUT

BK – BLACK
BR – BROWN
R – RED
O – ORANGE
Y – YELLOW
G – GREEN
BL – BLUE
V – VIOLET
W – WHITE

CHECKED BY:	
APPROVED BY:	
ORIG E.O. 3180	
12/27/99	
CHG E.O. 3335	
8/29/00	

WIRING DIAGRAM IID ECONOMASTER
FIRING MODE–ON/OFF

Raypak

INPUTS: 3,000,000 THRU 4,000,000 BTUH

SIZE: 3001–4001 | TYPE: P | 152457 | 1

SERVICING

General Location Of Controls

Models 926-1826

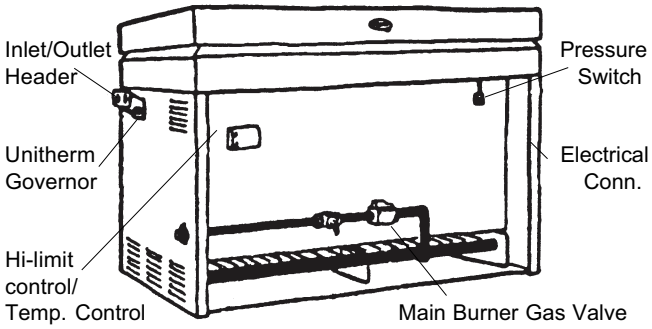

Fig. 28: General Location of Controls (Models 926-1826)

Models 2100-4001

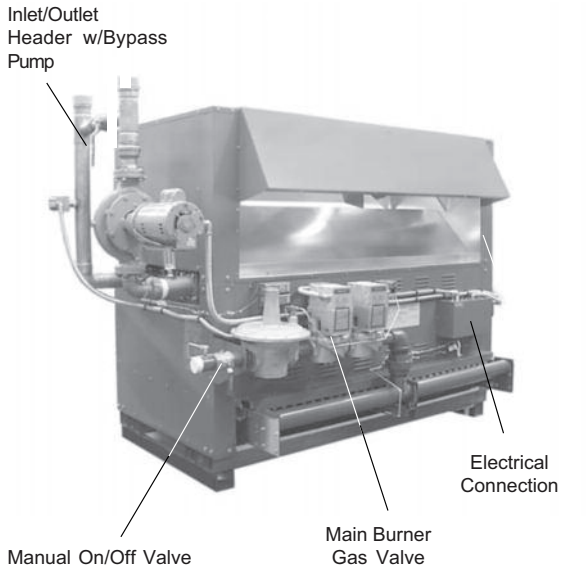

Fig. 29: General Location of Controls (Models 2100-4001)

Temperature Control

The pool water temperature is controlled by the pool thermostat. The heater water temperature high limit is controlled by the manual reset high limit.

Pressure Switch

The pressure switch, or heater actuator on Models 926-1223 equipped with a Unitherm Governor, ensures that the heater operates only when the filter pump is in operation. It is factory set at 1.75 PSI for deck level installations. When the heater is located below the level of the spa or pool, it may be necessary to reset the pressure switch to compensate for the no-flow static head. If it is necessary to reset the pressure switch, we recommend the following procedure.

Pressure Switch Adjustment

1. Make sure the pool filter is clean before adjusting the switch.

2. Set the heater control to the OFF mode.

3. Turn the filter pump on and confirm that the pressure switch is closed (use a multimeter to check). If the pressure switch fails to close, either the switch setting is too high or the filter pump is not supplying enough pressure.

4. Turn the heater ON.

5. Manually turn the pressure adjustment knob clockwise until the heater shuts off. (A flat screw driver may be necessary if knob is too tight).

6. Slowly turn the adjustment knob counter-clockwise until the heater calls for heat again.

7. Turn an additional 1/2 turn counter-clockwise.

8. While the heater is running, check the adjustment by turning the pump off and on several times. The burners should shut off immediately when the pump is turned off. If it does not, repeat the above steps until proper operation is observed.

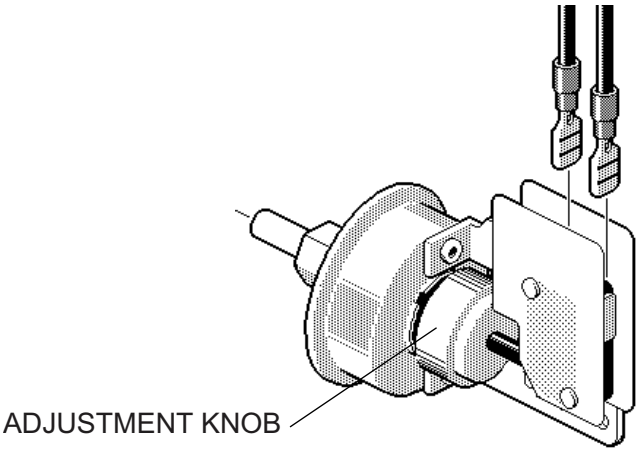

Fig. 30: Pressure Switch Adjustment Range

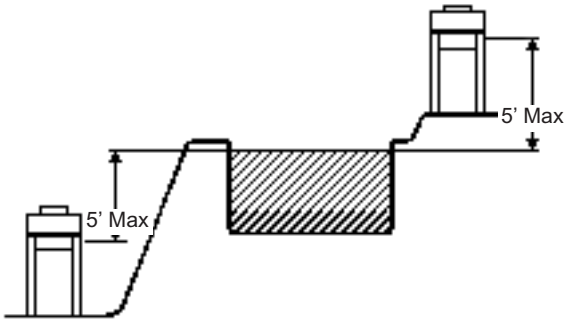

Fig. 31: Heat Exchanger Height Above/Below Pool

NOTE: If heater is installed outside of the limits shown, a flow switch must be used in place of the pressure switch when mounted and wired adjacent to the heater.

Two-Speed Pumps

In some cases, the flow on the low speed is insufficient to operate the heater. This is apparent when the pressure switch cannot be further adjusted or if the heater makes banging noises. In these cases, the pump must be run at high speed when heating the water.

CAUTION: Do not operate the heater without the function of a properly adjusted pressure switch.

Pilot Safety

The heater employs a pilot safety which closes the main gas valve within 8/10ths of a second whenever the pilot flame is interrupted. Pilot flame is automatically lit when the device is powered. Unit performs its own safety check and opens the main valve only after the pilot is proven to be lit.

START-UP PROCEDURES

Before Start-Up

Burners

Clean main burners and air louvers of dust, lint and debris. Keep heater area clear and free from combustibles, flammable liquids, and chemicals. Do not obstruct the flow of combustion and ventilating air.

Water

Water must be flowing through the heater.

Start-Up

CAUTION: Propane gas is heavier than air and sinks to the ground. Exercise extreme care in lighting heater in confined areas.

Lighting Instructions

1. Close all gas valves. Turn off electric power supply wait 5 minutes.
2. Open manual pilot valve. Turn on electric power, pilot is automatically lighted.
3. Open main gas valve.
4. Set temperature controls to desired temperature.

To Shut Down

Close all manual gas valves. Turn off electric power.

After Start-Up

Pilot System Checkout Procedure

1. Turn on power to the ignition systems and turn gas supply off.

2. Check ignition module as follows:

   a. Set the thermostat above pool water temperature to turn heater on.

   b. Watch for continuous spark at the pilot burner.

   c. Time the spark operation. Time must be within the lockout timing period (15 or 90 seconds).

   d. Turn thermostat down to turn off heater and wait 60 seconds on lockout models before beginning step 3.

3. Turn on gas supply.

4. Set thermostat above pool water temperature to turn on heater.

5. Systems should start as follows:

   a. Spark will turn on and pilot gas valve will open at once. Pilot burner should ignite after gas reaches the pilot burner.

   b. Spark ignition should cut off when pilot flame is established.

   c. Main gas valve should open and main burner should ignite after gas reaches the burner port.

INSPECTION PROCEDURES

Burners

Clean main burners and air louvers of dust, lint and debris. Keep heater area clear and free from combustibles and flammable liquids. Do not obstruct the flow of combustion and ventilating air. Make visual check of burner and pilot flame. Yellow flame indicates clogging of air openings. Lifting or blowing flame indicates high gas pressure. Low flame indicates low gas pressure.

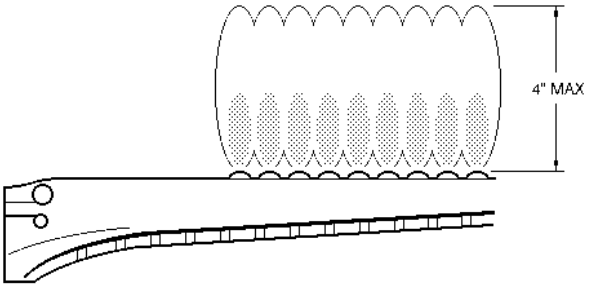

Fig. 32: Main Burner Flame

Fig. 33: Pilot Burner Flame

Feel inlet and outlet pipes. Outlet should be only slightly warmer than inlet. It should not be hot.

WARNING: Should overheating occur or the gas supply fails to shut off, turn off the manual gas control to the appliance.

CONTROLS

Check all controls to see that they are operational. To check electric safety turn off main burner. Observe pilot burner when shutting off pilot gas. Ignition spark should go on. Main gas valve will also drop out.

SERVICING PROCEDURES

Tube Cleaning Procedure (Typical)

Establish a regular inspection schedule, the frequency depending on the local water condition and severity of service. Do not let the tubes clog up solidly. Clean out deposits over 1/16" in thickness.

Although the illustration shows the mechanical cleaning procedure of a small heater, it is typical of all sizes. The heater may be cleaned from the return header side as shown, without breaking pipe connections. It is preferable, however, to remove both headers for better visibility through the tubes and to be sure the ground up lime dust does not get into the system.

Note that you do not remove the top pan or the heat exchanger, generally.

After reaming, mount the wire brush in lieu of the auger and clean out the debris remaining in the tubes. Another method is to remove the heat exchanger, ream tubes and immerse heat exchanger in non-inhibited de-scale solvent.

Burner Drawer Removal

1. Shut off power and gas supply to the pool heater. Disconnect union(s) and pilot tubing, then loosen and remove burner-hold down screws.

2. Disconnect wires at gas valve and slide burner drawer out.

Gas Valve Removal

1. Shut off gas supply to the pool heater. Remove gas piping to gas valve inlet.

2. Disconnect wires, pilot tubing and bleed line, if required.

3. Turn vertical gas pipe from manifold slightly and unscrew gas valve.

4. Reverse above procedure to re-install.

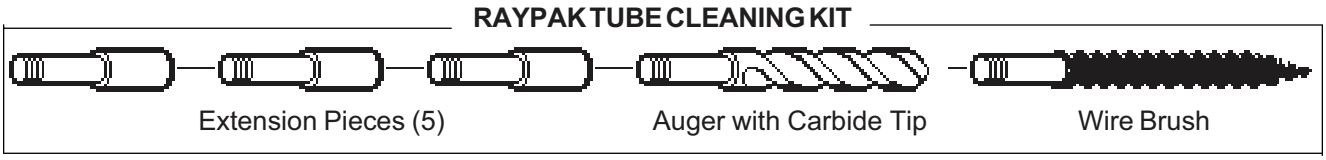

Fig. 34: Tube Cleaning Kit

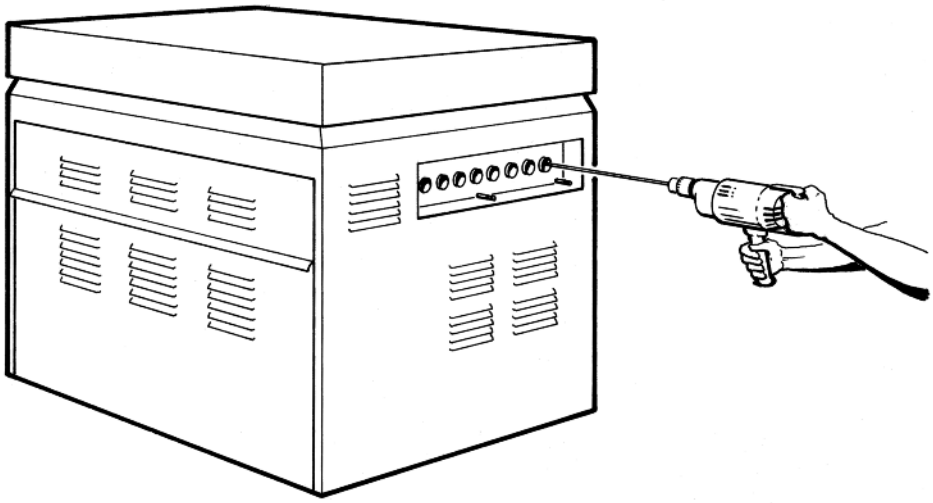

Fig. 35: Tube Cleaning Procedure

Main Burner and Orifice Removal

1. Remove screws and burner hold down bracket. NOTE: If the heat exchanger is sooted badly, the burner hold-down bracket and spacer can become distorted from direct flame impingement and this usually necessitates replacement of these parts.

2. Lift burners from slotted spacer and slide from orifices. Clean with a wire brush.

3. Orifices usually do not need to be replaced. To clean, run either copper wire or wood through orifice. Do not enlarge hole. To remove orifice, use a socket wrench and remove the manifold. DO NOT overtighten when reinstalling.

Pilot Removal and Cleaning

1. Disconnect pilot tubing at pilot and sensor/igniter wire. Remove screws holding pilot bracket to burner drawer.

2. Remove pilot and bracket, clean pilot of debris, small bugs, etc., with wire or small brush.

3. Replace pilot, pilot tubing, sensor ignition wires and check for leaks.

Heat Exchanger Removal

1. Shut water, gas and electricity off, close valves, relieve pressure and remove relief valve. Remove side inspection panels.

2. Remove top holding screws.

3. Remove draft diverter, lift and remove top and flue collector on stack type models. Remove inspection panels.

4. Loosen bolts and disconnect flange nuts on inlet/outlet header, loosen union(s) at gas pipe, and slide heater away from piping until studs clear the heater.

5. Remove heat exchanger corner brackets.

6. Remove combustion chamber clips at the four corners of the heat exchanger.

7. Lift heat exchanger straight up using caution not to damage refractory.

Heat Exchanger Reassembly

1. Heat exchanger header O-rings should be replaced with new ones.

2. Install inlet-outlet and return water headers and install header retainer nuts and torque nuts evenly.

3. Install the four (4) corner clips between tube sheets and refractory. Replace "V" baffles.

4. Install thermostat sensing bulbs in header wells and replace bulb retaining clips.

5. Install inlet and return pipes in water headers using pipe thread sealant.

6. Install water pressure relief valve, flow switch, and low water cutoff devices if so equipped.

7. Open water supply and return shutoff valves. Fill heater and water piping system with water. Check heater and piping system for leaks at full line pressure. Run system circulating pump for a minimum of 1/2 hour with heater shutoff.

8. Shut down entire system and vent all radiation units and high points in system piping. Check all strainers for debris.

9. Install flue collector, jacket top and inspection panels. Install top holding screws. Install draft diverter and vent piping if so equipped.

10. If gas piping was disconnected, reconnect gas piping system and check for leakage using a soap solution.

11. Double check electrical circuits, grounding connections and pump with wiring diagram supplied with heater.

12. Check for correct water pressure and water level in the system. Make sure that system pump operates immediately on the call for heat. The system is ready for operation.

Combustion Chamber Removal

To remove the combustion chamber you must first have removed the heat exchanger. Unbolt metal combustion chamber retainer from top and remove combustion chamber panels individually.

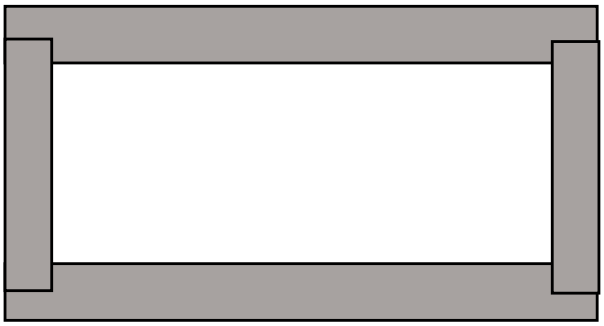

Fig. 36: Refractory Panels—Top View

Control Well Replacement

Remove top, sensing bulb and clip. Collapse well tube at the open end and with a chisel, push through into the header, and remove the well through header. Insert a new well and roll into place. If a roller is not available, solder the well in place with silver solder.

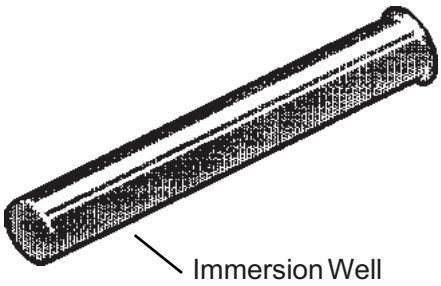

Fig. 37: Immersion Well

Tube Replacement Procedure

On Raypak tube replacement may be affected without rolling, as a temporary means of repair, provided there are two or more tubes rolled into act as stays on left and right sides. The "O" rings should provide a seal up to 125 PSI working pressure. Use a 3/8" heavy duty reversible drill motor or larger, to power the tube roller. If a reversible drill is not available, after rolling the tube in, remove the drill motor and wrench out the roller. A tube roller is available from the factory.

Shut gas and power off to the unit, close the system off and drain the pool heater. Remove draft diverter. Remove the access panels and jacket top. Lift the canopy and flue collector off (on models 926-1826, remove the canopy hold-down brackets). Remove "V" baffles over tube(s) to be replaced. If no pipe unions have been provided, use the header as a union, remove the flange nuts off the inlet-outlet header, break gas connection and slide heater away from piping, allowing room to work. Pull wedge clips out of control wells and remove sensing bulbs. Remove flange nuts from the return header and remove header. Lift heat exchanger straight up and out.

Heat exchanger header o-rings must be replaced with new ones. The tube may be cut out with a hack-saw or hammer and chisel adjacent to both tube sheets, leaving stubs in the tube sheets. Then proceed to collapse stubs in the tube sheets with a chisel or screwdriver. Use caution not to cut into the tube sheet. Replacement tubes will have the fins stripped off longer on one end. The long end is inserted into the opening of the tube sheet first; then the short end is fitted through the opposite tube sheet. If the tube ends become dented or bent, straighten at least four (4) inches back from the tube end by means of a tapered punch.

Insert tube roller into tube opening up to stop against tube, then push center rod in until roller is tight. Be careful to keep replacement tube squared up 1/8" outside each tube sheet. A loose tube will sometimes pull toward the roller. Attach drill motor to tube roller, holding it straight and level. Proceed to expand tube until the tool begins to grab. At this point, 1/2" to 1" should be exposed on the tool shank. Reverse drill motor or wrench out by hand. Care should be exercised to avoid applying excessive torque during rolling operation and to avoid thinning out any part of the tube wall excessively over .015". Use same procedure at the opposite end of the tube.

Apply line pressure test, and re-roll, if necessary, before replacing canopy.

Procedure For Cleaning Flue Gas Passageways

Soot can clog areas behind fins and cause eventual tube failure. Any sign of soot at base of burners or around outer jacket indicates a need for cleaning.

1. Lift off draft hood and flue collector by removing bolts and screws.

2. Remove "V" baffles from heat exchanger.

3. Remove burner tray.

4. Take garden hose and wash heat exchanger, making sure soot is removed from between fins. (Avoid excessive water against refractory).

5. Reassemble; when heater is fired, some steam will form from wet refractory. This is normal.

NOTE: In extreme cases it may be necessary to remove the heat exchanger completely for cleaning. The simplest method is steam cleaning at a local car wash. **DO NOT WIRE BRUSH!**

CAUTION: Soot is combustible, so exercise extreme care.

Unitherm Governor Replacement

1. Shut off water, gas and electricity, close valves, relieve pressure.

2. Drain heat exchanger.

3. Remove Unitherm Governor.

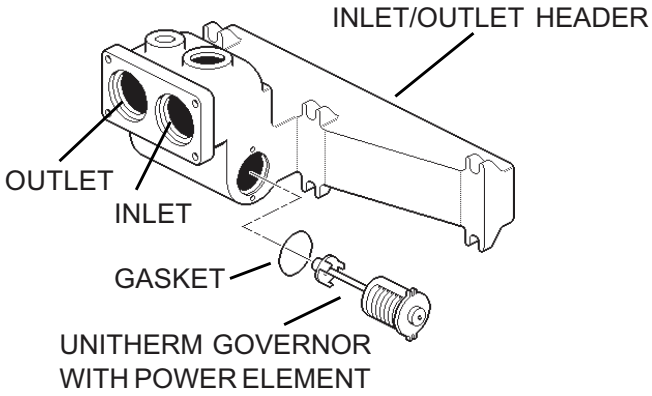

Fig. 38: Unitherm Governor—Models 926–1223

To test operation of Unitherm Governor, place in hot water (110°F or higher) and watch for movement against spring. If no movement, replace.

MAINTENANCE AND CARE

To be followed one month after initial start-up and then quarterly.

1. Inspect top of heater and draft-hood for soot, and open fuel gas passageways.

2. Clean main burners and pilot burner of dust and lint.

CAUTION: Soot may be combustible. Wet completely when cleaning.

3. Inspect and operate all controls and gas valve.

4. Make visual check of burner and pilot flame. Flame pattern on main burner and pilot is indicated on page 26. Yellow flame means restriction of air openings. Lifting or blowing flame indicates high gas pressure. Low flame means low gas pressure.

5. Clean room air intake openings to ensure adequate flow of combustion and ventilation air.

6. Remove header opposite inlet pipes when cleaning and inspect internal tubes for scale deposits. If scale does not form within first quarterly inspection, then inspect annually thereafter.

CAUTION: Combustion air must not be contaminated by corrosive chemical fumes which can damage the heater and void the warranty.

7. Keep heater air clear and free from combustible materials and other flammable and corrosive vapors and liquids.

8. Keep moving parts lubricated.

9. Manual operation of pressure/temperature relief valve at least once a year.

Winterizing Your Heater

When heaters installed outdoors in freezing climate areas are to be shut down for the winter, please observe the following step-by-step procedure:

1. Remove the drain plug or open the drain cock located on the inlet-outlet header. On larger heaters with external Unitherm Governor(s) and piping, locate plug at low point of Governor piping, or break connections and rotate inlet fittings 180 degrees to face downward. Turn off manual main gas and main gas shut off.

2. Disconnect compression fittings on both ends of the 1/8" copper tube and allow the tube to drain. Remove the "heat exchanger inspection panels" on the right side of the heater to gain access to the fitting on the return header. Remove return header.

TROUBLESHOOTING

IMPORTANT NOTICE

These instructions are primarily intended for the use of qualified personnel specifically trained and experienced in the installation of this type of heating equipment and related system components. Installation and service personnel may be required by some states to be licensed. Persons not qualified shall not attempt to install this equipment nor attempt repairs according to these instructions.

MECHANICAL (FOR QUALIFIED SERVICE PERSONNEL ONLY)

PROBLEM	CAUSE	SOLUTION
Harmonics, or whining noise	U.G. Inoperative……	Check movement by putting in hot water (110°F or higher). If no movement, replace.
	*Debris or restriction in system……	Locate the restriction and remove. Flush system and clean.
	*Debris in gas line……..	Remove debris or blow out gas line.
	Low flow……...	Scale forming in heat exchanger - clean heat exchanger and check pool pH and total alkalinity.
Heater going on and off continously	Dirty filter……	Backwash filter.
	Low water level in pool..……	Raise water level.
	External bypass setting out of adjustment……..	Adjust bypass
	*Pressure switch out of adjustment……..	Adjust pressure switch
Liming or scale forming on heat exchanger	Pool water……...	Recommended pH should be between 7.3 and 7.8 total alkalinity 100-150 PPM maximum. Hardness -150-400 PPM maximum. (see page 2)
Sooting	High flow rates…….....	Reduce by adding manual bypass valve and adjust by putting thermometer in header (1/4" NPT) drain opening. Set bypass so thermometer reads between 105° and 110°F.
	U.G. Inoperative……..	Check movement by putting in hot water (110°F or higher). If no movement, replace.
	*Air starvation……..	Refer to installation instructions.
	*Improper venting……...	Follow recommended installation instructions.
	*Insects or debris clogging burner intake ports……..	Clean burners
Pilot outage	Low gas pressure……...	Adjust gas pressure.
	Restricted pilot……...	Clean pilot.
	Weak pilot generator……..	Replace pilot.
Yellow lazy flame	Low gas pressure……...	Adjust gas pressure.
	*Insects or debris clogging burner intake ports……..	Clean burners.

*Usually occurs on initial start-up

Outer jacket very hot (paint blistered)	*Broken refractory caused by shipping damage or improper combustion……..	Replace refractory panels.
	Excessive sooting of heat exchanger……...	Determine cause of sooting & correct.
Takes long time to heat pool or spa	Calculate temperature in °F/hr……...	Heat rise (°F/hr.) = Htr.output / Pool gallonage x 8.33 or refer to heater sizing chart. This does not take into account heat loss due to weather.
	Filter not running long enough……...	Reset time clock.
	Dirty filter……..	Clean filter.
	Gas line or meter under-sized…….....	Refer to installation instructions.
Liming		
	Bypassing too much water……...	Inspect bypass for movement, if no movement, replace.
	U/G not functioning…….....	Replace if no movement when heated.
Leaking at well.	Overacid…….....	Replace well and maintain water chemistry properly.
Leaking at heat exchanger.	Overacid……...	Replace heat exchanger and maintain chemistry properly.
Gasket brittle and leaking-(overheated).	Heater running after pump shuts off……...	See pressure switch adjustment.
	Refractory damage…….	Replace refractory.
	Sooted heater……..	Determine cause of sooting and correct.

*Usually occurs on initial start-up

ELECTRICAL (ELECTRONIC IGNITION IID) IID

Intermittent Pilot System

TROUBLESHOOTING HONEYWELL S8600

WARNING: HIGH VOLTAGE. For qualified technicians **ONLY**.

NOTE: Some heaters may be equipped with an ignition module that shuts off pilot gas if the pilot fails to light. To reset, interrupt power to the heater.

START

NOTE: Before troubleshooting, familiarize yourself with the start-up and checkout procedure.

TURN GAS SUPPLY OFF. TURN THERMOSTAT (CONTROLLER) TO CALL FOR HEAT

POWER TO MODULE (24 V NOMINAL)

NO — Check line voltage power, low voltage transformer, limit controller, thermostat (controller) and wiring.

YES

SPARK ACROSS IGNITER/SENSOR GAP

NO — Pull ignition lead and check spark at module.

Spark Okay?

YES

- Check ignition cable, ground wiring, ceramic insulator and gap, and correct.
- Check boot of the ignition cable for signs of melting or buckling. Take protective action to shield cable and boot from excessive temperatures.

YES

TURN GAS SUPPLY ON

PILOT BURNER LIGHTS?

NO —
- Check that all manual gas valves are open, supply tubing and pressures are good, and pilot burner orifice is not blocked.
- Check electrical connections between module and pilot operator on gas control.
- Check for 24 Vac across PV-MV/PV terminals on module. If voltage is okay, replace gas control; if not, replace module.

YES

SPARK STOPS WHEN PILOT IS LIT?

NO —

NOTE: If S8600H goes into lockout, reset system by removing power for at least 60 seconds. Lockout is used on Pro. models.

- Check continuity of ignition cable and ground wire.
- Clean flame rod.
- Check electrical connections between flame rod and module.
- Check for cracked ceramic flame rod insulator.
- Check that pilot flame covers flame rod and is steady and blue.
- Adjust pilot flame.
- If problem persists, replace module.

YES

MAIN BURNER LIGHTS?

NO —
- Check for 24 Vac across MV-MV/PV terminals. If no voltage, replace module.
- Check electrical connections between module and gas control. If okay, replace gas valve or gas control operator, i.e. pilot gas valve, flow switch etc.

YES

SYSTEM RUNS UNTIL CALL FOR HEAT ENDS?

NO —

NOTE: IF S8600H goes into lockout, reset system.

- Check continuity of ignition cable and ground wire.

NOTE: If ground is poor or erratic, shutdowns may occur occasionally even though operation is normal at the time of checkout.

- Check that pilot flame covers flame rod and is steady and blue.
- If checks are okay, replace module.

YES

CALL FOR HEAT ENDS

SYSTEM SHUTS OFF?

NO —
- Check for proper thermostat (controller) operation.
- Remove MV lead at module; if valve closes, recheck temperature controller and wiring; if not, replace gas valve.

YES

TROUBLESHOOTING ENDS

Repeat procedure until trouble free operation is obtained.

RAYTHERM COMMERCIAL SWIMMING POOL HEATERS

LIMITED WARRANTY
RAYTHERM TYPE P
SIZES 0926-4001

SCOPE:

Raypak, Inc. ("Raypak") warrants to the original owner that all parts of this boiler which are actually manufactured by Raypak will be free from failure under normal use and service for the specified warranty periods and subject to the conditions set forth in this Warranty. Labor charges and other costs for parts removal or reinstallation, shipping and transportation are not covered by this Warranty but are the owner's responsibility.

HEAT EXCHANGER WARRANTY:

Five (5) years from date of boiler installation. Includes only cupro nickel heat exchanger with bronze waterways.

ANY OTHER PART MANUFACTURED OR FURNISHED BY RAYPAK:

One (1) Year warranty from date of boiler installation, or eighteen (18) months from date of factory shipment based on Raypak's records, whichever comes first.

SATISFACTORY PROOF OF INSTALLATION DATE, SUCH AS INSTALLER INVOICE, IS REQUIRED. THIS WARRANTY WILL BE VOID IF THE BOILER RATING PLATE IS ALTERED OR REMOVED.

ADDITIONAL WARRANTY EXCLUSIONS:

This warranty does not cover failures or malfunctions resulting from:

1. Failure to properly install, operate or maintain the boiler in accordance with our printed instructions provided;
2. Abuse, alteration, accident, fire, flood and the like;
3. Sediment or lime buildup, freezing, or other conditions causing inadequate water circulation;
4. High velocity flow exceeding boiler design rates;
5. Failure of connected systems devices, such as pump or controller;
6. Use of non-factory authorized accessories or other components in conjunction with the boiler system;
7. Chemical contamination of combustion air or use of chemical additives to water.
8. Misuse or neglect, including but not limited to freeze ups, and operating the heater with cabinet door off, having flow restrictions or obstructions between the heater outlet and pool/spa or not maintaining proper thermal balance. pH level must be between 7.3 and 7.8 and total alkalinity between 100 and 150 PPM. Total Dissolved Solids (TDS) must be no greater and 3000 PPM, depending on pool/spa construction. (See page 2 of the I&O Manual for water chemistry information.)

PARTS REPLACEMENT:

Under this Warranty, Raypak will furnish a replacement for any failed part. The failed part must first be returned to Raypak if requested, with transportation charges prepaid, and all applicable warranty conditions found satisfied. The replacement part will be warranted for only the unexpired portion of the original warranty. Raypak makes no warranty whatsoever on parts not manufactured by it, but Raypak will apply any such warranty as may be provided to it by the parts manufacturer.

TO MAKE WARRANTY CLAIM:

Promptly notify the original installer, supplying the model and serial numbers of the unit, date of installation and description of the problem. The installer must then notify his Raypak distributor for instructions regarding the claim. If either is not available, contact Service Manager, Raypak, Inc., 2151 Eastman Ave, Oxnard, CA 93030 or call (805) 278-5300. In all cases proper authorization must first be received from Raypak before replacement of any part.

EXCLUSIVE WARRANTY - LIMITATION OF LIABILITY:

This is the only warranty given by Raypak. No one is authorized to make any other warranties on Raypak's behalf. THIS WARRANTY IN LIEU OF ALL OTHER WARRANTIES, EXPRESS OR IMPLIED, INCLUDING BUT NOT LIMITED TO IMPLIED WARRANTIES OF MERCHANTABILITY AND FITNESS FOR A PARTICULAR PURPOSE. RAYPAK'S SOLE LIABILITY AND THE SOLE REMEDY AGAINST RAYPAK WITH RESPEC TO DEFECTIVE PARTS SHALL BE AS PROVIDED IN THIS WARRANTY. IT IS AGREED THAT RAYPAK SHALL HAVE NO LIABILITY, WHETHER UNDER THIS WARRANTY, OR IN CONTRACT, TORT, NEGLIGENCE OR OTHERWISE, FOR ANY SPECIAL, CONSEQUENTIAL, OR INCIDENTAL DAMAGE, INCLUDING DAMAGE FROM WATER LEAKAGE. Some states do not allow limitations on how long an implied warranty lasts, or for the exclusion of incidental or consequential damages. So the above limitation or exclusion may not apply to you.

This Limited Warranty gives you specific legal rights. You may also have other rights which may vary from state to state. We suggest that you complete the information below and retain this certificate in the event warranty service is needed. Reasonable proof of the effective date of the warranty (date of installation) must be presented, otherwise, the effective date will be based on the rate of manufacture plus thirty (30) days.

Effective: 04-15-2007
Replaces: 07-01-92

www.raypak.com

Raypak, Inc., 2151 Eastman Avenue, Oxnard, CA 93030 (805) 278-5300 Fax (805) 278-5468
Litho in U.S.A.