WIRING INSTRUCTIONS

TITLE NON-REV. "D" HANDLE DRILL

MILWAUKEE ELECTRIC TOOL CORP. 13135 WEST LISBON RD. BROOKFIELD, WIS

Date Feb. '72

BULLETIN 58-01-0170

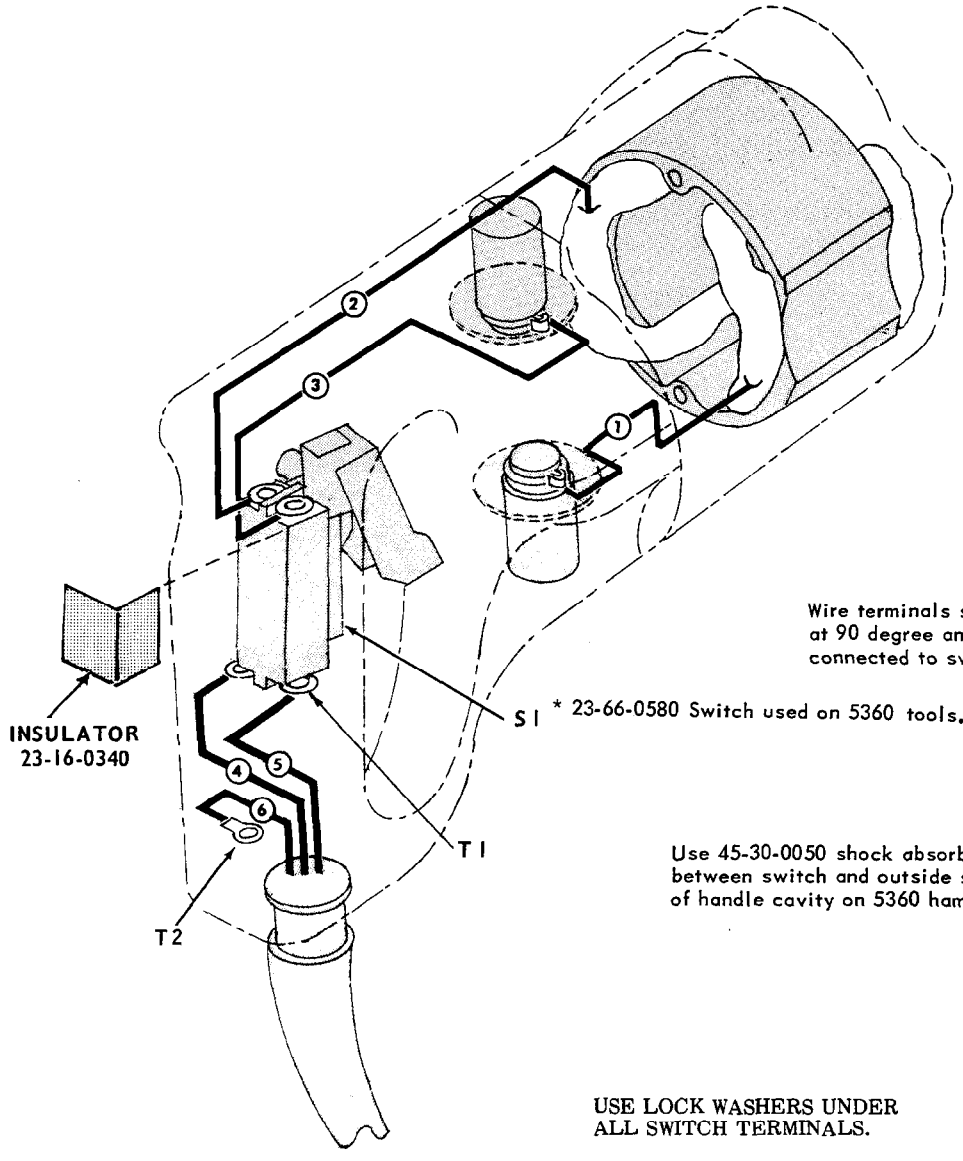

Field Lead No.2 Should Be Cut So That 1-3/8 Extends Past End of Handle.

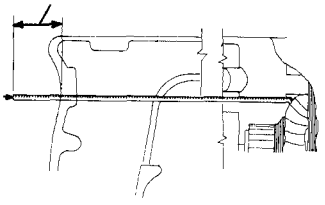

FOR ASSEMBLY PURPOSES ONLY

Field wire No.2 should run behind and over mounting boss and across brush-holder boss. Both field wire No.2 and brushholder wire No.3 should run across top of switch and in wire clamp.

Wire terminals should be bent at 90 degree angles after being connected to switch.

Use 45-30-0050 shock absorber slug between switch and outside surface of handle cavity on 5360 hammers.

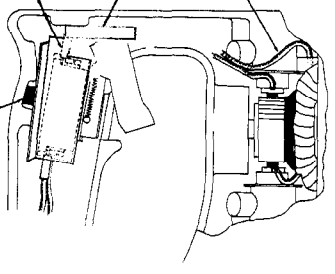

USE LOCK WASHERS UNDER ALL SWITCH TERMINALS.

NOTE:
ALL LEADS MUST BE HELD TO ± 1/8"
ALL FIELD LEADS TO BE MEASURED FROM AND PERPENDICULAR TO LAMINATIONS.
ALL LEAD LENTGHS ARE BEFORE STRIPPING

Where Terminal and Connector Combinations are Specified, See Parts Chart For Part No. and Quantity. See Dwg. For Actual Hookup.

WIRING SPECIFICATIONS

Wire Color	Wire No.	Ga.	Lgth in.	Terminal T1	Terminal T2	Terminal T3	Terminal T4	Connector C1	Connector C2	Connector C3	Connector C4	Wire Color	Wire No.	Ga.	Lgth in.	Terminal T1	Terminal T2	Terminal T3	Terminal T4	Connector C1	Connector C2	Connector C3	Connector C4
Red	1	Fld.	1-7/8									Green	6	Cord	3		X						
Brown	2	Fld.	8-1/2	X																			
White	3	18	5-1/2	X																			
Black	4	Cord	3	X																			
White	5	Cord	3	X																			

Electrical Parts

TERMINAL DESCRIPTION

Code	Part No.	Qnty.
T1	23-74-0330	4
T2	23-74-0050	1

CONNECTOR DESCRIPTION

Code	Part No.	Qnty.

SWITCH DESCRIPTION

Code	Part No.	Qnty.
S1	23-66-0230 *	1

Form OE-24