Parts Breakdown

DA403

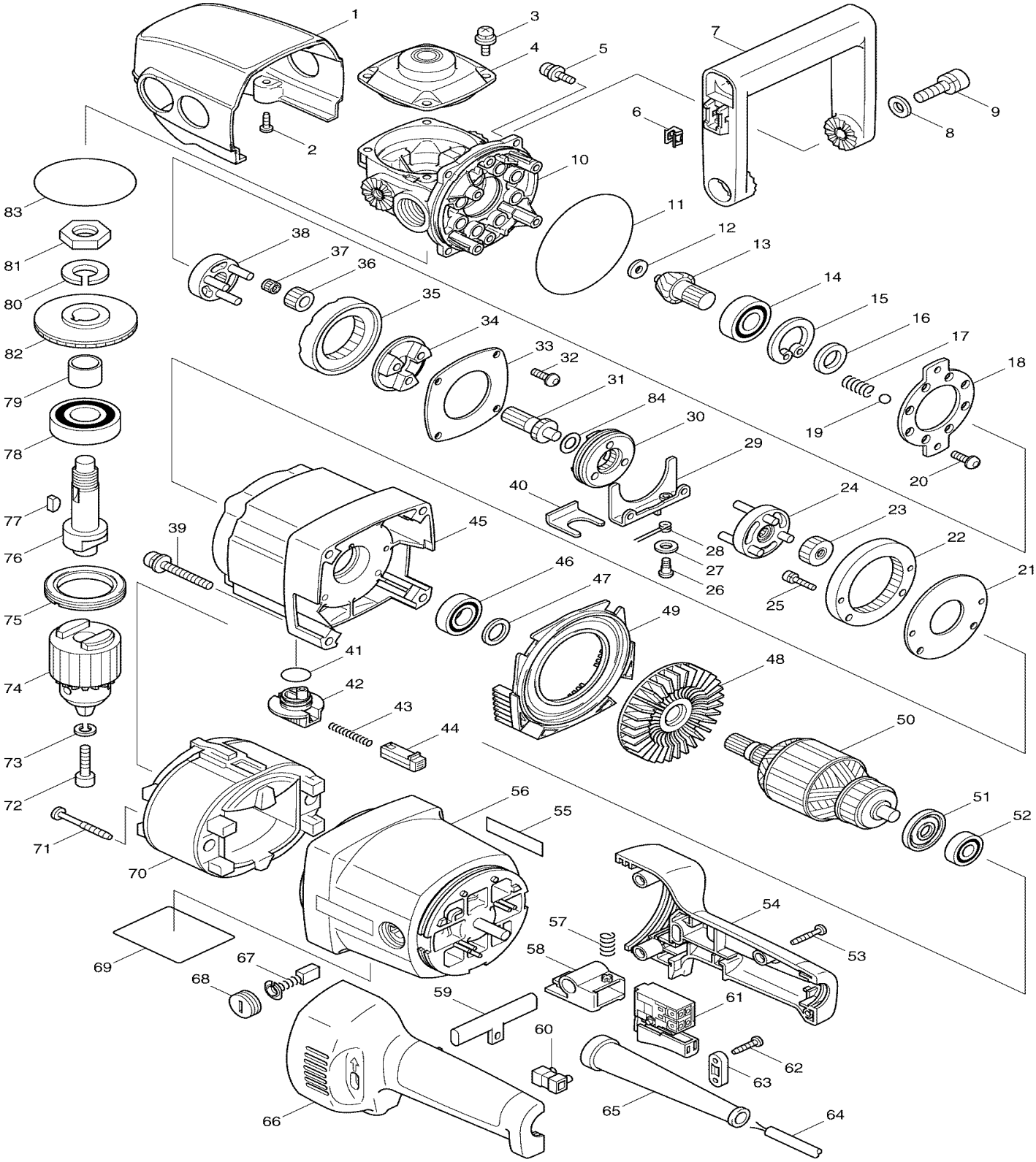

Parts Breakdown

DA403

Products with multiple versions are listed in subsiding order with the newest version on top not indented

Fig #	Part ID	Part Name	Quantity
1	417666-3	TOP COVER, DA4031	0
2	266026-4	TAPPING SCREW 4X12,9046	0
3	266086-6	H.S.H.BOLT M5X16,DA4031	0
3	911223-4	P.H. SCREW M5X16, 4301BV	0
4	152956-4	GEAR HOUSING COVER,DA4031	0
5	266086-6	H.S.H.BOLT M5X16,DA4031	0
5	911223-4	P.H. SCREW M5X16, 4301BV	0
6	344391-2	BIT HOLDER, 6233DWA	0
7	417665-5	FRONT GRIP, DA4031	0
8	941202-8	F. WASHER 8, 5037NB	0
9	922441-9	H.S.H. BOLT M8X25, SC190DWDE	0
10	152958-0	GEAR HOUSING CPL.	0
11	213803-5	O RING 85, DA4030	0
12	253804-1	F. WASHER 6, 6012HDW	0
13	227415-8	SPIRAL BEVEL GEAR 13, DA4030	0
14	211206-7	B. BEARING 6202LLB, NHP1310	0
15	962153-2	RETAINING RING R-35,HP2030	0
16	257212-8	RING 15, DA4030	0
17	233326-7	COMPRESSION SPRING 5, DA4031	0
18	345189-0	GUIDE PLATE, DA4031	0
19	216022-2	STEEL BALL 7.0, HR2400	0
20	265491-4	H.S.BUTTON HEAD BOLT M5X16, DA4031	0
21	345193-9	PLATE, DA4031	0
22	227021-9	INTERNAL GEAR 49, DA4030	0
23	152966-1	SPUR GEAR 19 CPL.	0
24	152965-3	CARRIER A CPL.	0
25	265493-0	H.S.H BOLT M4X20, DA4030	0
26	251306-1	P.H. SCREW M5, 9217SPC	0
27	941152-7	F. WASHER 6, HM1500	0
28	231657-8	TORSION SPRING 6, DA4031	0
29	345191-3	CHANGE GUIDE, DA4031	0
30	324201-9	CHANGE RING, DA4031	0
31	227025-1	SPUR GEAR 10, DA4031	0
32	265491-4	H.S.BUTTON HEAD BOLT M5X16, DA4031	0
33	345188-2	RETAINER PLATE, DA4031	0
34	223135-2	CAM DA40301	0
35	227022-7	INTERNAL GEAR 38, DA4031	0
36	227026-9	SPUR GEAR 14, DA4031	0
37	216420-0	NEEDLE CAGE 6910	0
38	152964-5	CARRIER CPL.	0
39	911373-5	P.H. SCREW M6X50, LS1013	0
40	961078-7	RETAINING RING S-18,BHR200SH	0
40	345190-5	LOCK PLATE, DA4031	0
41	213265-7	O RING 17, HR4002	0
42	417670-2	CHANGE LEVER, DA4031	0
43	233279-0	COMP.SPRING 4, BHR200SH	0
44	417298-6	LOCK BUTTON, DA4031	0
45	152960-3	GEAR CASE CPL.	0
46	211236-8	BALL BEARING 6002DDW,BO5001	0
47	253853-8	F. WASHER 15, LS1211	0
48	240003-4	FAN 80, 2012NB	0
49	417664-7	BAFFLE PLATE, DA4031	0
50	516856-6	ARMATURE ASS'Y 115V, DA4031	0
51	681649-1	INSULATION WASHER, 9921	0
52	211061-7	B. BEARING 6000LLB, 6222DWE	0
53	265999-8	TAPPING SCREW M4X25, HM1800	0
54	183392-3	HANDLE SET,DA4030	0
55	819063-3	MAKITA LABEL, 6992DWDE	0
56	183400-0	MOTOR HOUSING,DA4030	0
57	231402-1	COMP. SPRING 7, LS1045	0
58	416998-5	LOCK BUTTON,9077SL	0
59	417663-9	F/R CHANGE LEVER, DA4031	0
60	654532-5	TERMINAL BLOCK, 9523NB	0
61	650502-2	SWITCH,DA4031	0

62	265995-6	TAPPING SCREW 4X18, 4323K	0
63	687063-9	STRAIN RELIEF, 4323K	0
64	664265-4	CORD (2X16X8;SJ), 5007NBA	0
65	682564-2	CORD GUARD, 5007NLK	0
66	183392-3	HANDLE SET,DA4030	0
67	191963-2	CARBON BRUSH CB-303 SET, 9227C	0
68	643750-0	BRUSH HOLDER CAP, HM1100C	0
69	853218-0	NAME PLATE, DA4031	0
70	636226-4	FIELD 115V, DA4031	0
71	266056-5	T. SCREW FLANGE PT5X45,9046	0
72	266284-2	H.S.H. BOLT M6X25, DA4030	0
73	942151-2	SPRING WASHER 6, 5007NB	0
74	193520-2	DRILL CHUCK S13	0
75	285838-6	BEARING RETAINER 29-42, DA4000LR	0
76	324203-5	SPINDLE, DA4030	0
77	254032-1	WOODRUFF KEY 5, 5037NB	0
78	211278-2	BALL BEARING 6203DDW, 5077B (T2)	0
79	257715-2	SLEEVE 17, DA4030	0
80	942402-3	SPRING WASHER 16, DA4030	0
81	252182-6	HEX. NUT M16-22	0
81	252048-0	HEX NUT M16-22, 2710	0
82	227416-6	SPIRAL BEVEL GEAR 40, DA4030	0
83	213709-7	O RING 63,DA4030	0
84	253215-0	F. WASHER 8, 2030S	0
85	253771-0	F. WASHER 16, LS1011	0
1001	273654-8	GRIP 27, DA4030/4031	0
1002	410102-8	KEY HOLDER, 6013BR	0
1003	763434-5	CHUCK KEY 10, 6302H,6303H	0
1004	783204-6	HEX WRENCH, 3705, HR5000	0
1005	824647-4	PLASTIC CARRYING CASE, DA4030	0
5001	810134-9	CAUTION LABEL, 3709	0