VANGUARD®

UNVENTED (VENT-FREE) GAS FIREPLACE INSERT

OWNER'S OPERATION AND INSTALLATION MANUAL

For more information, visit www.desatech.com

VI33NRA
VI33PRA
REMOTE READY
GAS FIREPLACE
INSERT

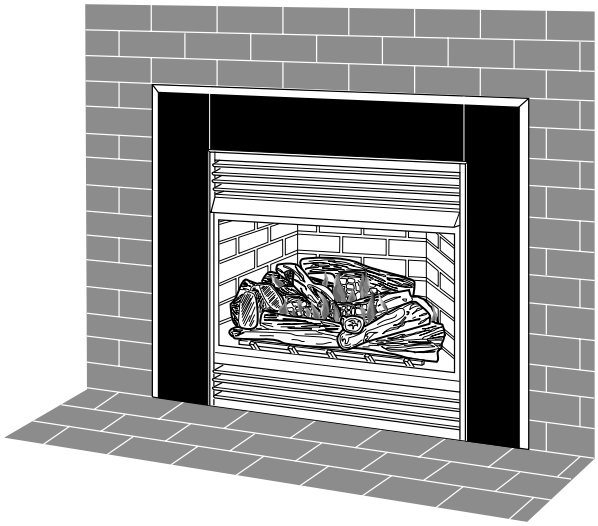

DESIGN CERTIFIED

Patent Pending

Shown with GS38 Surround Kit and G8010 Brick Liner Accessories

WARNING: If the information in this manual is not followed exactly, a fire or explosion may result causing property damage, personal injury, or loss of life.

— **Do not store or use gasoline or other flammable vapors and liquids in the vicinity of this or any other appliance.**

— **WHAT TO DO IF YOU SMELL GAS**

- **Do not try to light any appliance.**
- **Do not touch any electrical switch; do not use any phone in your building.**
- **Immediately call your gas supplier from a neighbor's phone. Follow the gas supplier's instructions.**
- **If you cannot reach your gas supplier, call the fire department.**

— **Installation and service must be performed by a qualified installer, service agency, or the gas supplier.**

WARNING: Improper installation, adjustment, alteration, service, or maintenance can cause injury or property damage. Refer to this manual for correct installation and operational procedures. For assistance or additional information consult a qualified installer, service agency, or the gas supplier.

WARNING: This is an unvented gas-fired heater. It uses air (oxygen) from the room in which it is installed. Provisions for adequate combustion and ventilation air must be provided. Refer to *Air for Combustion and Ventilation* section on page 4 of this manual.

This appliance may be installed in an aftermarket,* permanently located, manufactured (mobile) home, where not prohibited by local codes.

This appliance is only for use with type of gas indicated on the rating plate. This appliance is not convertible for use with other gases.

*** Aftermarket: Completion of sale, not for purpose of resale, from the manufacturer**

Save this manual for future reference.

DESA

TABLE OF CONTENTS

SAFETY INFORMATION 2
PRODUCT IDENTIFICATION 3
LOCAL CODES 4
UNPACKING 4
REMOTE CONTROL ACCESSORIES 4
PRODUCT FEATURES 4
AIR FOR COMBUSTION AND VENTILATION 4
INSTALLATION 7
OPERATING FIREPLACE INSERT 15
INSPECTING BURNERS 18
CLEANING AND MAINTENANCE 19
TROUBLESHOOTING 20
WIRING DIAGRAMS 23
SPECIFICATIONS 23
REPLACEMENT PARTS 23
SERVICE HINTS 23
TECHNICAL SERVICE 23
ILLUSTRATED PARTS BREAKDOWN AND PARTS LIST 24
ACCESSORIES 30
WARRANTY INFORMATION ..... Back Cover

SAFETY INFORMATION

⚠ WARNINGS

IMPORTANT: Read this owner's manual carefully and completely before trying to assemble, operate, or service this fireplace insert. Improper use of this fireplace insert can cause serious injury or death from burns, fire, explosion, electrical shock, and carbon monoxide poisoning.

⚠ DANGER: Carbon monoxide poisoning may lead to death!

Carbon Monoxide Poisoning: Early signs of carbon monoxide poisoning resemble the flu, with headaches, dizziness, or nausea. If you have these signs, the fireplace insert may not be working properly. **Get fresh air at once!** Have fireplace insert serviced. Some people are more affected by carbon monoxide than others. These include pregnant women, people with heart or lung disease or anemia, those under the influence of alcohol, and those at high altitudes.

Natural and Propane/LP Gas: Natural and propane/LP gases are odorless. An odor-making agent is added to the gas. The odor helps you detect a gas leak. However, the odor added to the gas can fade. Gas may be present even though no odor exists.

Make certain you read and understand all warnings. Keep this manual for reference. It is your guide to safe and proper operation of this fireplace insert.

⚠ WARNING: Any change to this heater or its controls can be dangerous.

⚠ WARNING: Do not allow fans to blow directly into the fireplace insert. Avoid any drafts that alter burner flame patterns. Ceiling fans can create drafts that alter burner flame patterns. Altered burner patterns can cause sooting.

⚠ WARNING: Do not use a blower insert, heat exchanger insert, fireplace hood, or other accessory not approved for use with this fireplace.

⚠ WARNING: Any outside air ducts and/or ash dumps in the fireplace must be permanently closed before installing fireplace insert.

⚠ WARNING: Before installing in a solid fuel burning fireplace, the chimney flue and fireplace must be cleaned of soot, creosote, ashes, and loose paint by a qualified chimney cleaner.

Due to high temperatures, the appliance should be located out of traffic and away from furniture and draperies.

Do not place clothing or other flammable material on or near the appliance. Never place any objects on the heater.

Fireplace insert front and screen becomes very hot when running fireplace insert. Keep children and adults away from hot surfaces to avoid burns or clothing ignition. Fireplace insert will remain hot for a time after shut-down. Allow surfaces to cool before touching.

Carefully supervise young children when they are in the room with fireplace. When using the hand-held remote accessory, keep selector switch in the OFF position to prevent children from turning on burners with remote.

You must operate this fireplace insert with the fireplace insert screen and hood in place. Make sure fireplace insert screen and hood are in place before running fireplace insert.

SAFETY INFORMATION
Continued

Keep the appliance area clear and free from combustible materials, gasoline, and other flammable vapors and liquids.

1. This appliance is only for use with the type of gas indicated on the rating plate. This appliance is not convertible for use with other gases.
2. Do not place propane/LP supply tank(s) inside any structure. Locate propane/LP supply tank(s) outdoors (propane/LP units only).
3. If you smell gas
   - shut off gas supply
   - do not try to light any appliance
   - do not touch any electrical switch; do not use any phone in your building
   - immediately call your gas supplier from a neighbor's phone. Follow the gas supplier's instructions
   - if you cannot reach your gas supplier, call the fire department
4. This fireplace insert shall not be installed in a bedroom or bathroom.
5. Do not use this fireplace insert as a wood-burning fireplace. Use only the logs provided with the fireplace insert.
6. Do not add extra logs or ornaments such as pine cones, vermiculite, or rock wool. Using these added items can cause sooting. Do not add lava rock around base. Rock and debris could fall into the control area of fireplace insert.
7. This fireplace insert is designed to be smokeless. If logs ever appear to smoke, turn off fireplace insert and call a qualified service person. *Note:* During initial operation, slight smoking could occur due to log curing and burning of manufacturing residues.
8. To prevent the creation of soot, follow the instructions in *Cleaning and Maintenance,* page 19.
9. Before using furniture polish, wax, carpet cleaner, or similar products, turn heater off. If heated, the vapors from these products may create a white powder residue within burner box or on adjacent walls or furniture.
10. This fireplace insert needs fresh air ventilation to run properly. This fireplace insert has an Oxygen Depletion Sensing (ODS) safety shutoff system. The ODS shuts down the fireplace if not enough fresh air is available. See *Air for Combustion and Ventilation,* pages 4 through 6. If fireplace insert keeps shutting off, see *Troubleshooting,* pages 20 through 22.
11. Do not run fireplace insert
    - where flammable liquids or vapors are used or stored
    - under dusty conditions
12. Do not use this fireplace insert to cook food or burn paper or other objects.
13. Do not use fireplace insert if any part has been exposed to or under water. Immediately call a qualified service technician to inspect the fireplace insert and to replace any part of the control system and any gas control which has been under water.
14. Do not operate fireplace insert if any log is broken. Do not operate fireplace insert if a log is chipped (dime-sized or larger).
15. Turn fireplace insert off and let cool before servicing. Only a qualified service person should service and repair fireplace insert.
16. Operating fireplace insert above elevations of 4,500 feet could cause pilot outage.
17. To prevent performance problems, do not use propane/LP fuel tanks of less than 100 lbs. capacity (propane/LP units only).
18. Provide adequate clearances around air openings.

PRODUCT IDENTIFICATION

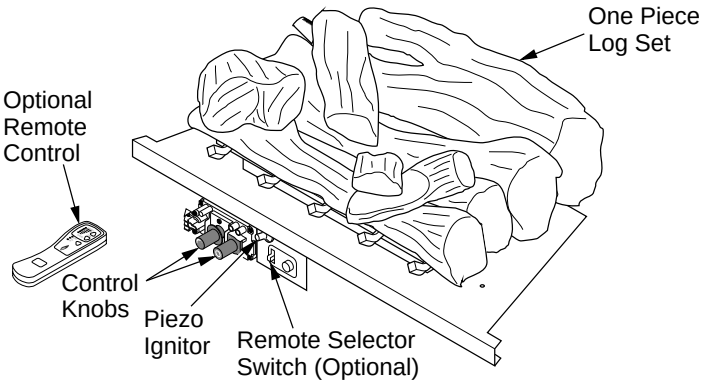

Figure 1 - Log Base Assembly

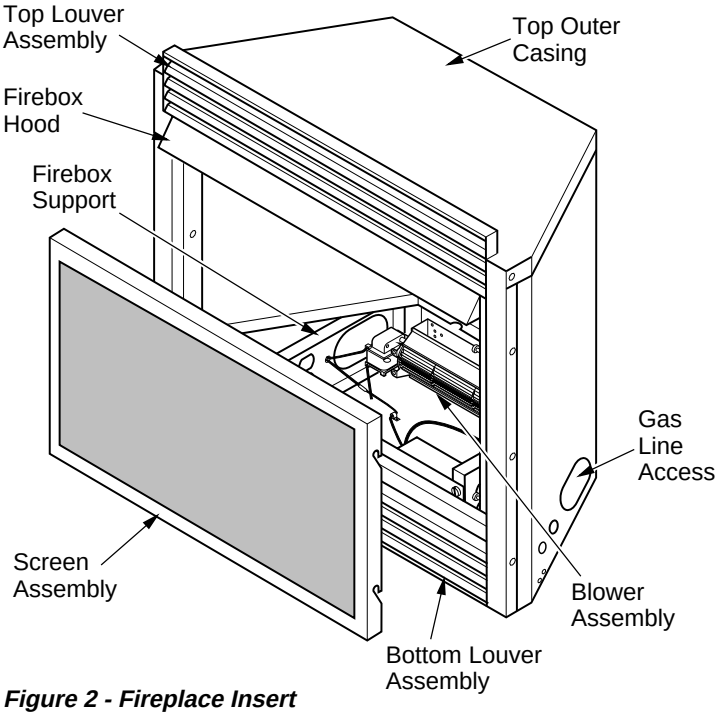

Figure 2 - Fireplace Insert

LOCAL CODES

Install and use fireplace insert with care. Follow all local codes. In the absence of local codes, use the latest edition of *The National Fuel Gas Code ANSI Z223.1/*NFPA 54*.

*Available from:

American National Standards Institute, Inc.
1430 Broadway
New York, NY 10018

National Fire Protection Association, Inc.
Batterymarch Park
Quincy, MA 02269

UNPACKING

⚠ CAUTION: Do not remove the warning and instruction labels attached to the heater base assembly. These markings contain important warranty and safety information.

1. With utility knife, cut the carton all the way around above the staples on the bottom tray. Lift the carton off the heater. Remove packing. *Note:* The hood is located in the packing on the right hand side of the heater front. Lift the heater off the bottom tray.
2. Locate two screws above top corners of the fireplace insert screen. Remove and discard these screws. Lift fireplace insert screen up and pull out to remove.
3. Remove protective packaging applied to logs, log base assembly, and fireplace insert.
4. Remove fireplace insert hood from carton insert.
5. Check all items for any shipping damage. If damaged, promptly inform dealer where you bought fireplace insert.

REMOTE CONTROL ACCESSORIES

There are four optional remote controls that can be purchased separately for this fireplace insert:

- wall switch
- wall thermostat
- hand-held ON/OFF remote
- hand-held thermostat remote

See *Accessories*, page 30.

PRODUCT FEATURES

OPERATION

This vent-free fireplace insert is clean burning. It requires no outside venting. There is no heat loss out a vent or up a chimney. Heat is generated by both realistic flames and glowing embers. When used without the blower, the fireplace insert requires no electricity making it ideal for emergency backup heat.

SAFETY DEVICE

This fireplace insert has a pilot with an Oxygen Depletion Sensing (ODS) safety shutoff system. The ODS/pilot is a required feature for vent-free room heaters. The ODS system shuts off the fireplace insert if there is not enough fresh air.

PIEZO IGNITION SYSTEM

This fireplace insert has a piezo ignitor. This system requires no matches, batteries, or other sources to light fireplace insert.

BLOWER ASSEMBLY

This fireplace insert is equipped with a blower assembly. The blower operates thermostatically and has a variable control. The blower circulates heated air from the fireplace insert into the room. Use of blower is optional.

AIR FOR COMBUSTION AND VENTILATION

⚠ WARNING: This heater shall not be installed in a confined space or unusually tight construction unless provisions are provided for adequate combustion and ventilation air. Read the following instructions to insure proper fresh air for this and other fuel-burning appliances in your home.

Today's homes are built more energy efficient than ever. New materials, increased insulation, and new construction methods help reduce heat loss in homes. Home owners weather strip and caulk around windows and doors to keep the cold air out and the warm air in. During heating months, home owners want their homes as airtight as possible.

While it is good to make your home energy efficient, your home needs to breathe. Fresh air must enter your home. All fuel-burning appliances need fresh air for proper combustion and ventilation.

Exhaust fans, fireplaces, clothes dryers, and fuel burning appliances draw air from the house to operate. You must provide adequate fresh air for these appliances. This will insure proper venting of vented fuel-burning appliances.

AIR FOR COMBUSTION AND VENTILATION
Continued

PROVIDING ADEQUATE VENTILATION

The following are excerpts from *National Fuel Gas Code ANSI Z223.1/NFPA 54, Section 5.3, Air for Combustion and Ventilation.*

All spaces in homes fall into one of the three following ventilation classifications:

1. Unusually Tight Construction
2. Unconfined Space
3. Confined Space

The information on pages 4 through 6 will help you classify your space and provide adequate ventilation.

Unusually Tight Construction

The air that leaks around doors and windows may provide enough fresh air for combustion and ventilation. However, in buildings of unusually tight construction, you must provide additional fresh air.

Unusually tight construction is defined as construction where:

a. walls and ceilings exposed to the outside atmosphere have a continuous water vapor retarder with a rating of one perm (6 x 10^{-11} kg per pa-sec-m^2) or less with openings gasketed or sealed *and*

b. weather stripping has been added on openable windows and doors *and*

c. caulking or sealants are applied to areas such as joints around window and door frames, between sole plates and floors, between wall-ceiling joints, between wall panels, at penetrations for plumbing, electrical, and gas lines, and at other openings.

If your home meets all of the three criteria above, you must provide additional fresh air. See *Ventilation Air From Outdoors*, page 6.

If your home does not meet all of the three criteria above, proceed to *Determining Fresh-Air Flow for Heater Location* in column 2.

Confined and Unconfined Space

The National Fuel Gas Code ANSI Z223.1/NFPA 54 defines a confined space as a space whose volume is less than 50 cubic feet per 1,000 Btu per hour (4.8 m^3 per kw) of the aggregate input rating of all appliances installed in that space and an unconfined space as a space whose volume is not less than 50 cubic feet per 1,000 Btu per hour (4.8 m^3 per kw) of the aggregate input rating of all appliances installed in that space. Rooms communicating directly with the space in which the appliances are installed*, through openings not furnished with doors, are considered a part of the unconfined space.

* Adjoining rooms are communicating only if there are doorless passageways or ventilation grills between them.

DETERMINING FRESH-AIR FLOW FOR HEATER LOCATION

Determining if You Have a Confined or Unconfined Space

Use this work sheet to determine if you have a confined or unconfined space.

Space: Includes the room in which you will install heater plus any adjoining rooms with doorless passageways or ventilation grills between the rooms.

1. Determine the volume of the space (length x width x height).

   Length x Width x Height = _____ cu. ft. (volume of space)

   Example: Space size 22 ft. (length) x 18 ft. (width) x 8 ft. (ceiling height) = 3168 cu. ft. (volume of space)

   If additional ventilation to adjoining room is supplied with grills or openings, add the volume of these rooms to the total volume of the space.

2. Multiply the space volume by 20 to determine the maximum Btu/Hr the space can support.

   _____ (volume of space) x 20 = (Maximum Btu/Hr the space can support)

   Example: 3168 cu. ft. (volume of space) x 20 = 63,360 (maximum Btu/Hr the space can support)

3. Add the Btu/Hr of all fuel burning appliances in the space.

Vent-free heater		_____	Btu/Hr
Gas water heater*		_____	Btu/Hr
Gas furnace		_____	Btu/Hr
Vented gas heater		_____	Btu/Hr
Gas fireplace logs		_____	Btu/Hr
Other gas appliances*	+	_____	Btu/Hr
Total	=	_____	Btu/Hr

   * Do not include direct-vent gas appliances. Direct-vent draws combustion air from the outdoors and vents to the outdoors.

   Example:

Gas water heater		40,000	Btu/Hr
Vent-free heater	+	33,000	Btu/Hr
Total	=	73,000	Btu/Hr

4. Compare the maximum Btu/Hr the space can support with the actual amount of Btu/Hr used.

   _____ Btu/Hr (maximum the space can support)

   _____ Btu/Hr (actual amount of Btu/Hr used)

   Example: 63,360 Btu/Hr (maximum the space can support)

   73,000 Btu/Hr (actual amount of Btu/Hr used)

AIR FOR COMBUSTION AND VENTILATION
Continued

The space in the example in column 2, page 5, is a confined space because the actual Btu/Hr used is more than the maximum Btu/Hr the space can support. You must provide additional fresh air. Your options are as follows:

A. Rework worksheet, adding the space of an adjoining room. If the extra space provides an unconfined space, remove door to adjoining room or add ventilation grills between rooms. See *Ventilation Air From Inside Building*.

B. Vent room directly to the outdoors. *See Ventilation Air From Outdoors*.

C. Install a lower Btu/Hr heater, if lower Btu/Hr size makes room unconfined.

If the actual Btu/Hr used is less than the maximum Btu/Hr the space can support, the space is an unconfined space. You will need no additional fresh air ventilation.

⚠ WARNING: If the area in which the heater may be operated is smaller than that defined as an unconfined space or if the building is of unusually tight construction, provide adequate combustion and ventilation air by one of the methods described in the *National Fuel Gas Code, ANSI Z223.1/NFPA 54, Section 5.3* or applicable local codes.

VENTILATION AIR

Ventilation Air From Inside Building

This fresh air would come from an adjoining unconfined space. When ventilating to an adjoining unconfined space, you must provide two permanent openings: one within 12" of the ceiling and one within 12" of the floor on the wall connecting the two spaces (see options 1 and 2, Figure 3). You can also remove door into adjoining room (see option 3, Figure 3). Follow the *National Fuel Gas Code ANSI Z223.1/NFPA 54, Section 5.3, Air for Combustion and Ventilation* for required size of ventilation grills or ducts.

Ventilation Air From Outdoors

Provide extra fresh air by using ventilation grills or ducts. You must provide two permanent openings: one within 12" of the ceiling and one within 12" of the floor. Connect these items directly to the outdoors or spaces open to the outdoors. These spaces include attics and crawl spaces. Follow the *National Fuel Gas Code ANSI Z223.1/NFPA 54, Section 5.3, Air for Combustion and Ventilation* for required size of ventilation grills or ducts.

IMPORTANT: Do not provide openings for inlet or outlet air into attic if attic has a thermostat-controlled power vent. Heated air entering the attic will activate the power vent. Any outside air ducts and/or ash dumps in the fireplace shall be permanently closed at the time of appliance installation.

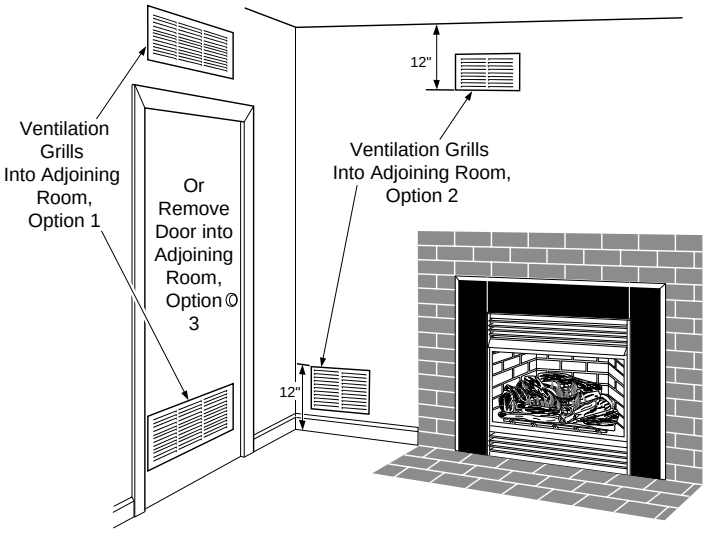

Figure 3 - Ventilation Air from Inside Building

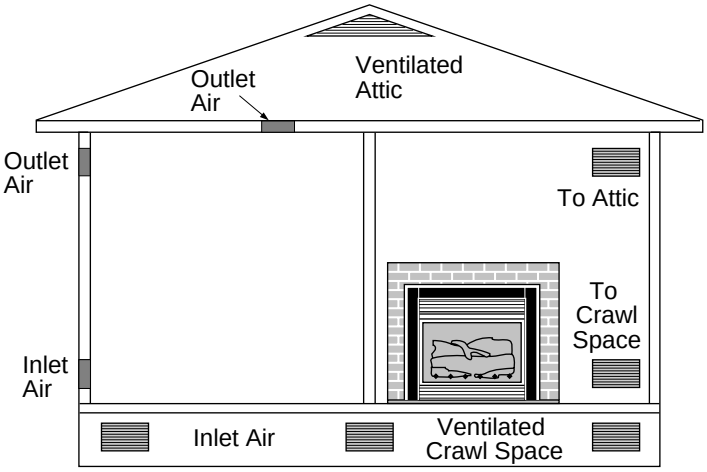

Figure 4 - Ventilation Air from Outdoors

INSTALLATION

NOTICE: This heater is intended for use as supplemental heat. Use this heater along with your primary heating system. Do not install this heater as your primary heat source. If you have a central heating system, you may run system's circulating blower while using heater. This will help circulate the heat throughout the house. In the event of a power outage, you can use this heater as your primary heat source.

⚠ WARNING: A qualified service person must install fireplace insert. Follow all local codes.

⚠ WARNING: Never install the fireplace insert
- **in a bedroom or bathroom**
- **in a recreational vehicle**
- **where curtains, furniture, clothing, or other flammable objects are less than 42 inches from the front, top, or sides of the fireplace insert**
- **in high traffic areas**
- **in windy or drafty areas**

⚠ CAUTION: This fireplace insert creates warm air currents. These currents move heat to wall surfaces next to fireplace insert. Installing fireplace insert next to vinyl or cloth wall coverings or operating fireplace insert where impurities (such as, but not limited to, tobacco smoke, aromatic candles, cleaning fluids, oil or kerosene lamps, etc.) in the air exist, may discolor walls or cause odors.

⚠ WARNING: Before installing in a solid fuel burning fireplace, the chimney flue and firebox must be cleaned of soot, creosote, ashes, and loose paint by a qualified chimney cleaner.

Note: Your Vanguard fireplace insert is designed to be used in zero clearance installations. Wall or framing material can be placed directly against any exterior surface on the rear, sides, or top of your fireplace insert, except where standoff spacers are integrally attached. If standoff spacers are attached to your insert, these spacers can be placed directly against wall or framing materials.

IMPORTANT: Vent-free heaters add moisture to the air. Although this is beneficial, installing fireplace in rooms without enough ventilation air may cause mildew to form from too much moisture. See *Air for Combustion and Ventilation,* pages 4 through 6.

IMPORTANT: Make sure the fireplace insert is level. If fireplace insert is not level, log set will not work properly.

CHECK GAS TYPE

Use the correct gas type (natural or propane/LP) for your unit. If your gas supply is not correct, do not install fireplace insert. Call dealer where you bought fireplace insert for proper type fireplace insert.

ELECTRICAL HOOKUP (Blower Accessory)

This fireplace insert includes a blower assembly with an electrical cord. The electrical cord is five feet in length. You must locate fireplace insert within reach of a 120 volt grounded electrical outlet. If not, install and properly ground GA3555, three-prong 120 volt electrical outlet, in fireplace insert. Follow instructions included in kit (see *Accessories,* page 30).

INSTALLING SURROUND KIT (GS38 OR GS43)

⚠ CAUTION: Close masonry fireplace damper securely before installing fireplace insert. If chimney does not have a damper, block or cap top of chimney. Failure to cap an open chimney could cause drafts that can affect the heater's performance and increase surface temperatures.

⚠ CAUTION: If using a GS38 or GS43 surround kit accessory, it must be installed on this fireplace insert before installing into your masonry fireplace or wall opening.

Note: Use the accessory which best covers the existing masonry fireplace opening or wall opening.

- Model GS38 Surround Kit (for use with fireplaces with an opening smaller than 30" H and 38" W)
- Model GS43 Surround Kit (for use with fireplaces with an opening 30" to 36 3/4" H and 38" to 43" W)

1. Using a 5/16" nut driver, remove two shoulder screws and screen (see Figure 5). Remove 5/16" screen mounting shoulder screws (do not discard).

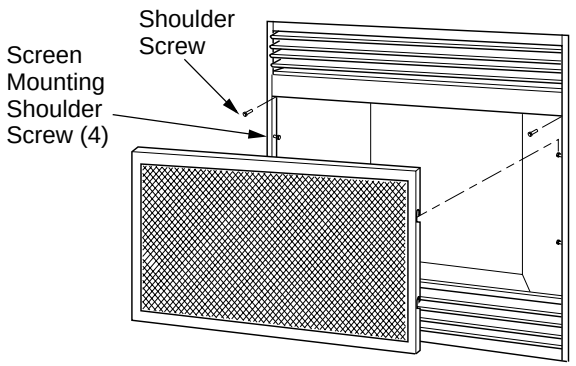

Figure 5 - Removing Screws and Screen

INSTALLATION
Continued

2. Remove log packaging from firebox cavity.
3. Align holes in left surround side panel with screen mounting screw holes. Replace 5/16" screen mounting shoulder screws removed in step 1 (see Figure 6). Do not tighten. Install Phillips screws in bottom (see Figure 6). Repeat for right side.
4. Using Phillips screwdriver, remove four screws attaching brass louver. Install one Phillips head screw (included with kit) in each side (see Figure 7).
5. Align top panel screw holes. Install four Phillips screws, do not tighten.
6. For model GS43, align six screw holes in side panels with holes in top panel (see Figure 9). For model GS38, align two screw holes in side panels with holes in top panel (see Figure 9). Insert and tighten screws.
7. Carefully inspect fireplace surround assembly. Make sure each part fits properly. Firmly tighten all screws installed during assembly.

⚠ CAUTION: Do not overtighten. Metal can bend, warp, or break under excessive strain.

8. Remove three pieces of brass trim from packaging.
9. Locate four brass screws, two adjusting plates with set screws, and two shims in the brass hardware packet.
10. Align shim under adjusting plate as shown in Figure 10.
11. Slide one end of adjusting plate/shim in slot of top brass trim (see Figure 10).
12. Slide other end of adjusting plate/shim in slot on mitered edge of side brass trim (see Figure 10).
13. While firmly holding edges of brass trim together, tighten both set screws on the adjusting plate with slotted screwdriver.
14. Repeat for other side.

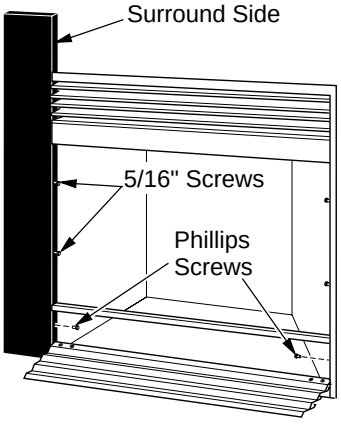

Figure 6 - Attaching Left Surround Side Panel

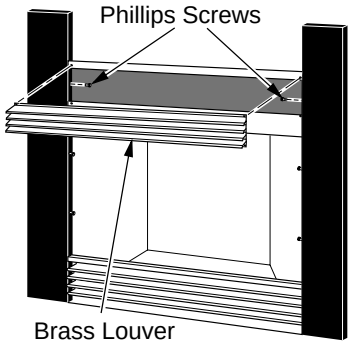

Figure 7 - Remove Brass Louver

15. Line up holes in brass trim with holes on side panels of fireplace surround assembly. Attach with brass-plated screws.
16. Move fireplace insert and surround assembly to masonry fireplace opening. Make sure fireplace insert and surround assembly fit properly.

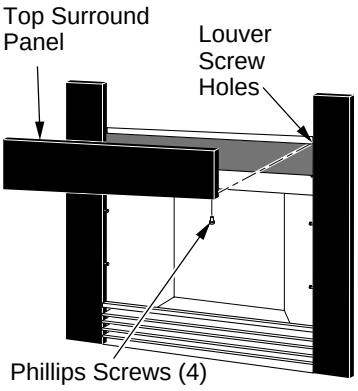

Figure 8 - Attaching Top Surround Panel

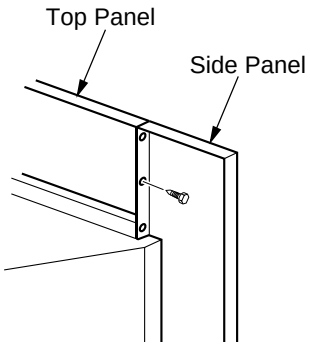

Figure 9 - Attaching Side Panels to Top Panel (GS43 Pictured)

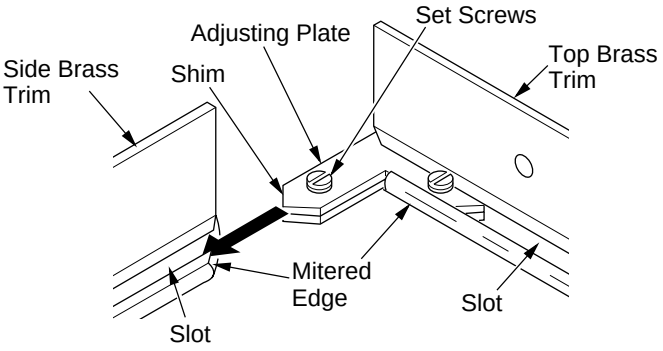

Figure 10 - Assembling Brass Trim

INSTALLING HOOD

Install hood to top of firebox as shown in Figure 11. Use 7 Phillips screws provided.

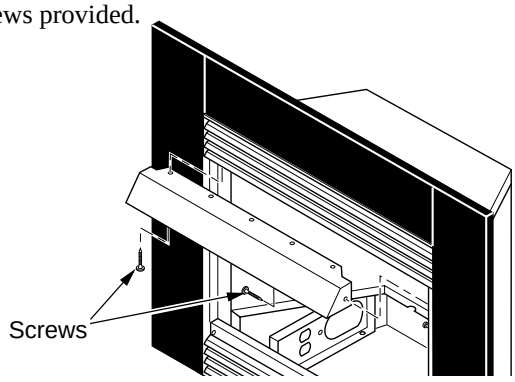

Figure 11 - Installing Hood to Firebox

INSTALLATION
Continued

INSTALLATION CLEARANCES

⚠ WARNING: Maintain the minimum clearances. If you can, provide greater clearances from floor, ceiling, and adjoining wall.

Carefully follow the instructions below. This will ensure safe installation.

Minimum Clearances For Side Combustible Material, Side Wall, and Ceiling

A. Clearances from the side of the fireplace cabinet to any combustible material and wall should follow diagram in Figure 12.

Example: The face of a mantel, bookshelf, etc. is made of combustible material and protrudes 3 1/2" from the wall. This combustible material must be 4" from the side of the fireplace opening (see Figure 12).

B. Clearances from the top of the fireplace opening to the ceiling should not be less than 42 inches.

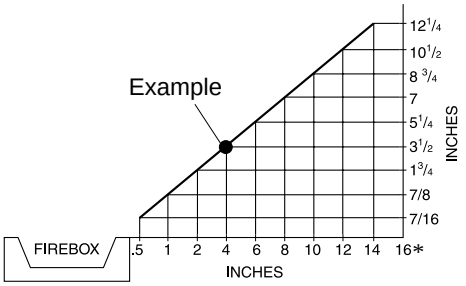

*Minimum 16 inches from Side Wall

Figure 12 - Minimum Clearance for Combustible to Wall

FIREPLACE INSERT INSTALLATION INTO MASONRY FIREPLACE

Installation of this fireplace insert involves installing fireplace insert into an existing masonry fireplace. If using a mantel above the fireplace, you must follow the clearances shown in Figure 14. Follow the instructions below to install the fireplace insert in this manner.

	Insert	Minimum Fireplace Opening
Height	25 9/16"	26 1/4"
Front Width	34 5/16"	35"
Depth	16 11/16"	17 1/4"

1. Use dimensions shown in Figure 13 for the masonry fireplace opening.
2. Install and properly ground GA3555, three-prong 120 volt electrical outlet, in fireplace insert. Follow instructions included in kit (see *Accessories,* page 30).
3. Install gas piping to fireplace location. This installation includes an approved flexible gas line (if allowed by local codes) after the equipment shutoff valve. The flexible gas line must be the last item installed on the gas piping. See *Installing Gas Piping to Fireplace Location,* page 10.
4. Carefully set fireplace insert in front of masonry fireplace with back of insert inside wall opening.
5. Attach flexible gas line to gas supply. See *Connecting Fireplace Insert to Gas Supply,* page 11.
6. Plug electrical cord into electrical outlet installed in step 2.
7. Carefully place fireplace insert into masonry fireplace.
8. Check all gas connections for leaks. See *Checking Gas Connections,* page 12.
9. Install brass trim after final finishing and/or painting of wall (see Figure 10, page 8).

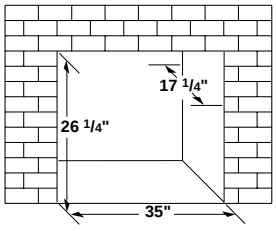

Figure 13 - Rough Opening for Installing in Masonry Fireplace

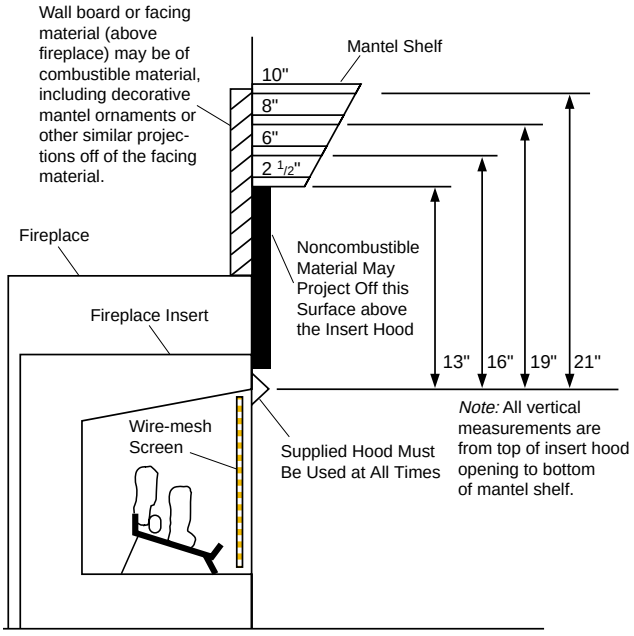

Figure 14 - Minimum Mantel Clearances for Fireplace Insert Installation

INSTALLATION
Continued

FIREPLACE INSERT INSTALLATION INTO FRAMED-IN ENCLOSURE

Installation of this fireplace insert involves installing fireplace insert into a framed-in enclosure. If using a mantel above the fireplace, you must follow the clearances shown in Figure 14, page 9. Follow these instructions to install the fireplace insert in this manner.

	Insert	Framing
Height	25 $^{9}/_{16}$"	26 $^{1}/_{4}$"
Front Width	34 $^{5}/_{16}$"	35"
Depth	16 $^{11}/_{16}$"	17 $^{1}/_{4}$"

1. Frame in rough opening. Use dimensions shown in Figure 15 for the rough opening.
2. Install and properly ground GA3555, three-prong 120 volt electrical outlet, in fireplace insert. Follow instructions included in kit (see *Accessories*, page 30).
3. Install gas piping into fireplace location. This installation includes an approved flexible gas line (if allowed by local codes) after the equipment shutoff valve. The flexible gas line must be the last item installed on the gas piping. See *Installing Gas Piping to Fireplace Location*.
4. Carefully set fireplace insert in front of rough opening with back of insert inside wall opening.
5. Carefully set fireplace insert into rough opening.
6. Attach flexible gas line to gas supply. See *Connecting Fireplace Insert to Gas Supply*, page 11.
7. Attach fireplace to wall studs using nails or wood screws through holes in nailing flange (see Figure 16).
8. Check all gas connections for leaks. See *Checking Gas Connections*, page 12.
9. Install surround kit. See *Installing Surround Kit (GS38 or GS43)*, pages 7 and 8.

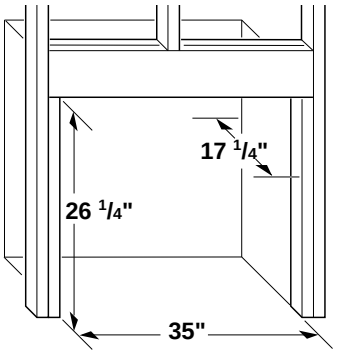

Figure 15 - Rough Opening for Installing in Wall

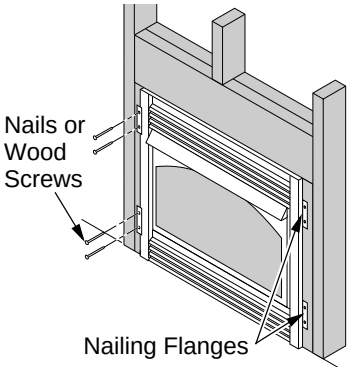

Figure 16 - Attaching Fireplace Insert to Wall Studs

Mantel Clearances for Insert Installation

If there is a mantel above masonry fireplace, you must meet minimum clearance between mantel shelf and top of fireplace opening.

NOTICE: Surface temperatures of adjacent walls and mantels become hot during operation. Walls and mantels above the firebox may become hot to the touch. If installed properly, these temperatures meet the requirements of the national product standard. Follow all minimum clearances shown in this manual.

NOTICE: If your installation does not meet the minimum clearances shown, you must do one of the following:
- **raise the mantel to an acceptable height**
- **remove the mantel**

INSTALLING GAS PIPING TO FIREPLACE LOCATION

⚠ WARNING: A qualified service person must connect fireplace Insert to gas supply. Follow all local codes.

⚠ CAUTION: For propane/LP gas, never connect heater directly to the propane/LP supply. This heater requires an external regulator (not supplied). Install the external regulator between the heater and propane/LP supply.

Installation Items Needed

Before installing fireplace insert, make sure you have the items listed below.

- external regulator (supplied by installer) (propane/LP units only)
- piping (check local codes)
- sealant (resistant to propane/LP gas)
- equipment shutoff valve *
- test gauge connection *
- sediment trap
- tee joint
- pipe wrench
- approved flexible gas line with gas connector (if allowed by local codes) (not provided)

* A CSA design-certified equipment shutoff valve with 1/8" NPT tap is an acceptable alternative to test gauge connection. Purchase the optional CSA design-certified equipment shutoff valve from your dealer. See *Accessories*, page 30.

INSTALLATION
Continued

⚠ WARNING: Never connect natural gas fireplace insert to private (non-utility) gas wells. This gas is commonly known as wellhead gas.

For propane/LP units, the installer must supply an external regulator. The external regulator will reduce incoming gas pressure. You must reduce incoming gas pressure to between 11 and 14 inches of water. If you do not reduce incoming gas pressure, heater regulator damage could occur. Install external regulator with the vent pointing down as shown in Figure 17. Pointing the vent down protects it from freezing rain or sleet.

⚠ CAUTION: Use only new, black iron or steel pipe. Internally-tinned copper tubing may be used in certain areas. Check your local codes. Use pipe of 1/2" diameter or greater to allow proper gas volume to fireplace insert. If pipe is too small, undue loss of volume will occur.

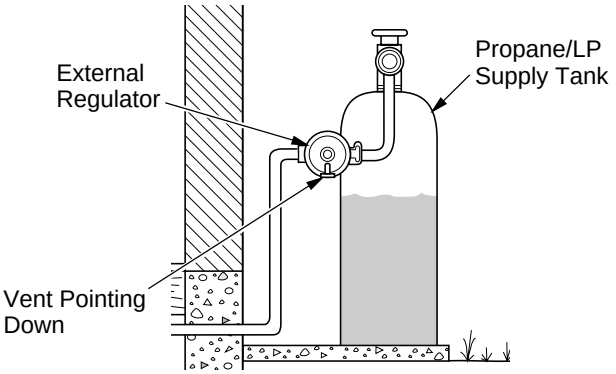

Figure 17 - External Regulator with Vent Pointing Down

CONNECTING FIREPLACE INSERT TO GAS SUPPLY

Installation must include an equipment shutoff valve, and plugged 1/8" NPT tap. Locate NPT tap within reach for test gauge hook up. NPT tap must be upstream from fireplace insert (see Figure 18).

IMPORTANT: Install equipment shutoff valve in an accessible location. The equipment shutoff valve is for turning on or shutting off the gas to the appliance.

Check your building codes for any special requirements for locating equipment shutoff valve to fireplaces.

Apply pipe joint sealant lightly to male NPT threads. This will prevent excess sealant from going into pipe. Excess sealant in pipe could result in clogged fireplace valves.

⚠ CAUTION: Use pipe joint sealant that is resistant to liquid petroleum (LP) gas.

We recommend that you install a sediment trap in supply line as shown in Figure 18. Locate sediment trap where it is within reach for cleaning. Install in piping system between fuel supply and heater. Locate sediment trap where trapped matter is not likely to freeze. A sediment trap traps moisture and contaminants. This keeps them from going into fireplace insert gas controls. If sediment trap is not installed or is installed wrong, fireplace may not run properly.

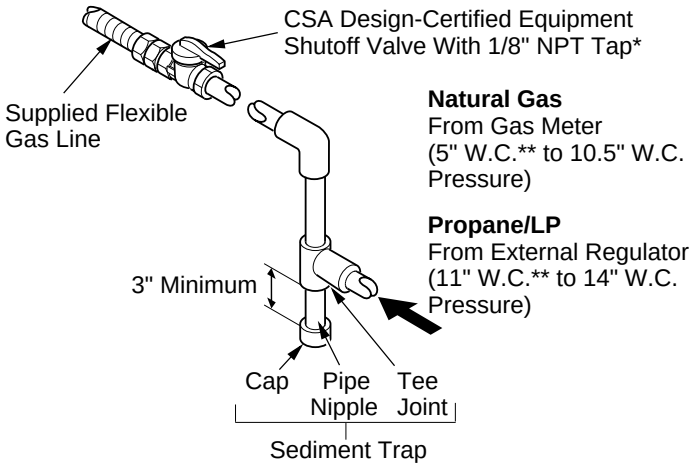

Figure 18 - Gas Connection

Installation Items Needed

- 5/16" hex socket wrench or nut-driver
- Phillips screwdriver
- sealant (resistant to propane/LP gas, not provided)

1. Remove fireplace insert screen. Remove two screws that hold fireplace insert screen in place for shipping. These screws are located near top of screen. Discard screws. Lift fireplace insert screen up and pull out to remove.
2. Remove screws that attach log base assembly to fireplace insert (see Figure 19, page 12). Carefully lift up log base assembly and remove from fireplace insert (see Figure 19, page 12).

Note: If adding the G8010 series brick liner accessory, install it now. Follow instructions in G8010 accessory kit.

⚠ CAUTION: Do not pick up log base assembly by burners. This could damage burners. Only handle base by grates.

3. Route gas supply line through access opening of fireplace insert (see Figure 2, page 3).

INSTALLATION
Continued

NOTICE: Most building codes do not permit concealed gas connections. A flexible gas line is provided to allow connection with the fireplace (see Figure 20). The flexible gas supply line connection to the equipment shutoff valve should be accessible.

4. Connect gas supply line to flexible gas line attached to gas regulator of fireplace insert (see Figure 20). Use sealant on all male pipe threads.
5. Check all gas connections for leaks. See *Checking Gas Connections*.
6. Replace log base assembly back into fireplace insert. Feed flexible gas line into fireplace insert base area while replacing log base assembly. Make sure the entire flexible gas line is in fireplace insert base area. Reattach log base assembly to fireplace insert with screws removed in step 2.

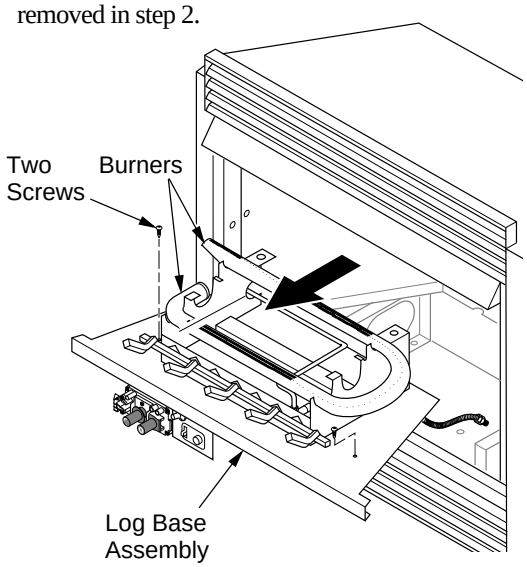

Figure 19- Removing Log Base Assembly From Fireplace

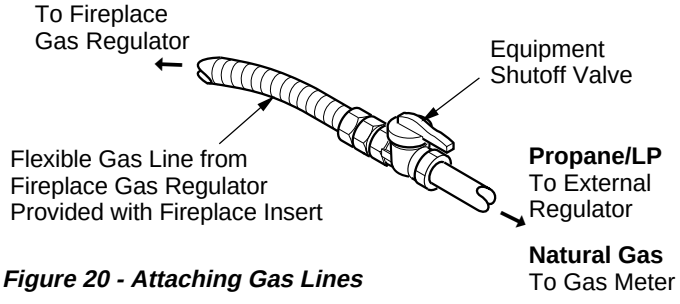

Figure 20 - Attaching Gas Lines

CHECKING GAS CONNECTIONS

⚠ WARNING: Test all gas piping and connections for leaks after installing or servicing. Correct all leaks at once.

⚠ WARNING: Never use an open flame to check for a leak. Apply a noncorrosive leak detection fluid to all joints. Bubbles forming show a leak. Correct all leaks at once.

Pressure Testing Gas Supply Piping System

Test Pressures In Excess Of 1/2 PSIG (3.5 kPa)

1. Disconnect appliance from its appliance main gas valve (control valve) and equipment shutoff valve from gas supply piping system. Pressures in excess of 1/2 psig will damage fireplace insert gas regulator.
2. Cap off open end of gas pipe where equipment shutoff valve was connected.
3. Pressurize supply piping system by either opening propane/LP supply tank valve for propane/LP gas or opening main gas valve located on or near gas meter for natural gas, or using compressed air.
4. Check all joints of gas supply piping system. Apply a noncorrosive leak detection fluid to all joints. Bubbles forming show a leak.
5. Correct all leaks at once.
6. Reconnect fireplace insert and equipment shutoff valve to gas supply. Check reconnected fittings for leaks.

Test Pressures Equal To or Less Than 1/2 PSIG (3.5 kPa)

1. Close equipment shutoff valve (see Figure 21).
2. Pressurize supply piping system by either opening propane/LP supply tank valve for propane/LP gas or opening main gas valve located on or near gas meter for natural gas, or using compressed air.

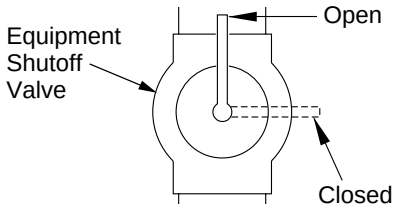

Figure 21 - Equipment Shutoff Valve

INSTALLATION
Continued

3. Check all joints from gas meter (natural gas) or propane/LP supply to equipment shutoff valve (see Figure 22 for natural gas, Figure 23 for propane/LP). Apply a noncorrosive leak detection fluid to all joints. Bubbles forming show a leak.
4. Correct all leaks at once.

Pressure Testing Fireplace Insert Gas Connections

1. Open equipment shutoff valve (see Figure 21, page 12).
2. Open main gas valve located on or near gas meter for natural gas or propane/LP supply tank valve.
3. Make sure control knob of fireplace insert is in the OFF position.
4. Check all joints from equipment shutoff valve to thermostat gas valve (see Figure 22). Apply a noncorrosive leak detection fluid to all joints. Bubbles forming show a leak.
5. Correct all leaks at once.
6. Light fireplace insert (see *Operating Fireplace Insert*, pages 15 through 18). Check all other internal joints for leaks.
7. Turn off fireplace insert (see *To Turn Off Gas to Appliance*, page 16).

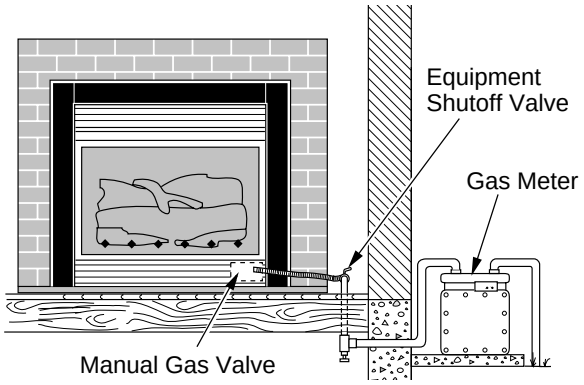

Figure 22 - Checking Gas Joints

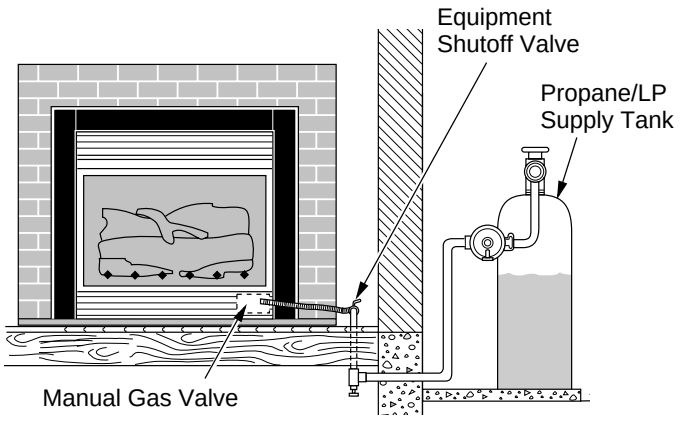

Figure 23 - Checking Gas Joints

INSTALLING LOGS

⚠ CAUTION: Do not remove the warning and instruction labels attached to the heater base assembly. These markings contain important warranty and safety information.

⚠ WARNING: Failure to position the parts in accordance with these diagrams or failure to use only parts specifically approved with this heater may result in property damage or personal injury.

⚠ WARNING: After installation and periodically thereafter, check to ensure that no flame comes in contact with any log. With the heater set to HIGH, check to see if flames contact any log. If so, reposition logs according to the log installation instructions in this manual. Flames contacting logs will create soot.

It is very important to install the logs exactly as instructed. Do not modify logs. Only use logs supplied with heater.

1. Place one-piece log set on grate to fit as illustrated in Figure 24. Make sure middle section at bottom of log set is seated into "U"-shaped cutout in center of chassis (see Figure 24).

   IMPORTANT: Make sure log does not cover any burner ports (see Figure 25, page 14).

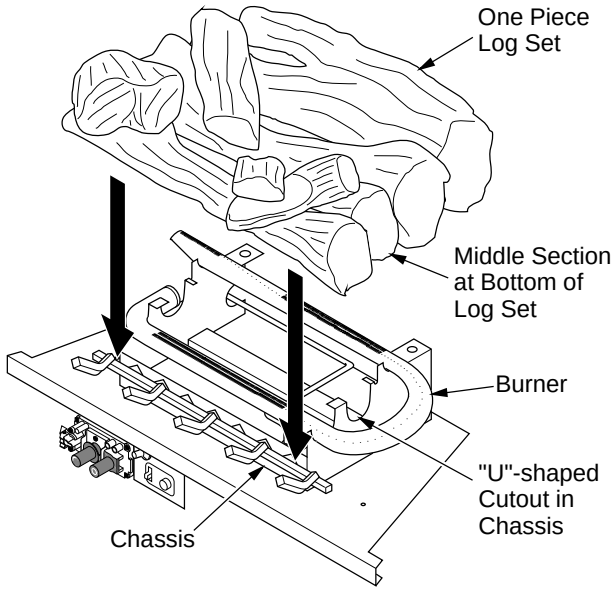

Figure 24 - Installing One Piece Log Set

INSTALLATION
Continued

2. Install fireplace insert screen by slipping notches of fireplace insert screen over screws on front of fireplace insert (see Figure 26).

⚠ WARNING: You must operate this fireplace insert with the fireplace insert screen in place. Make sure fireplace insert screen is in place before running fireplace insert.

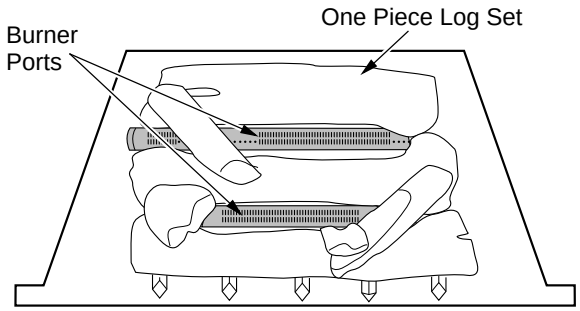

Figure 25 - Installing One Piece Log Set (Top View)

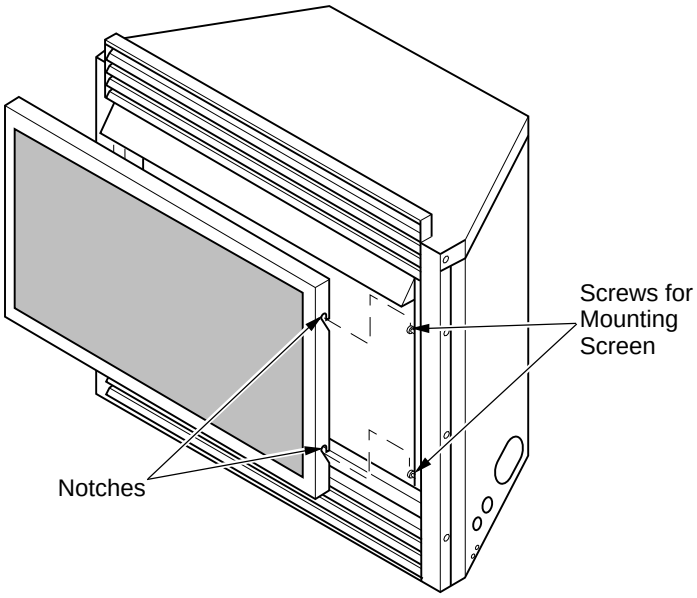

Figure 26 - Installing Fireplace Insert Screen

OPTIONAL WIRELESS HAND-HELD REMOTE CONTROL ACCESSORIES (GHRC and GHRCTA)

Installing Remote Receiver Unit

1. Disconnect switch wires from the control valve.
2. Remove screws attaching switchplate.
3. Remove switch plate (see Figure 27). Discard after removing.
4. Install remote receiver unit onto gas log heater base using mounting clips.
5. Push clips firmly into place (see Figure 28).
6. Connect wires as shown in Figure 29.

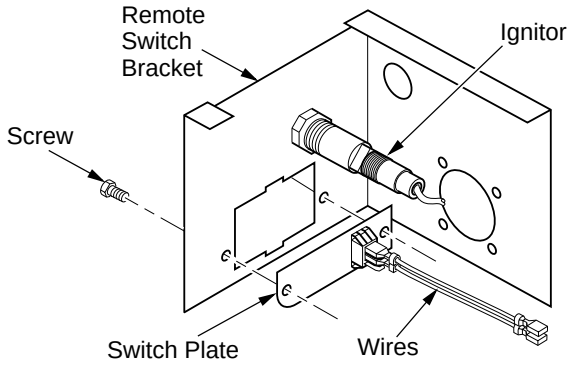

Figure 27 - Switch Plate and Wiring Harness

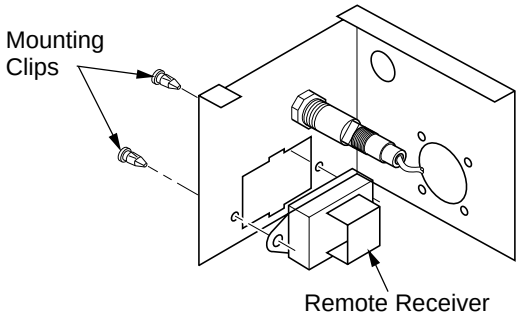

Figure 28 - Installing Remote Receiver

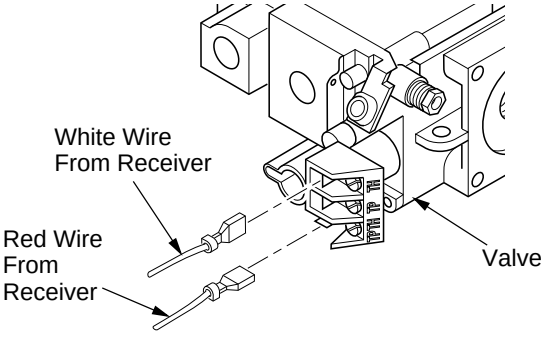

Figure 29 - Connecting Wires

INSTALLATION
Continued

INSTALLING 9-VOLT BATTERIES

Two 9-volt batteries (not included) are required to operate this heater with the wireless hand-held remote control set. Install one battery in the receiver and one in the hand-held remote control unit. *Note:* Only use alkaline batteries.

Installing 9-Volt Battery (Not Included) in Receiver

1. Locate back of receiver under front burner of heater.
2. Locate the battery clip mounted on the back of the receiver.
3. Slide a 9-volt battery through the clip.
4. Attach the terminal wires to the battery.

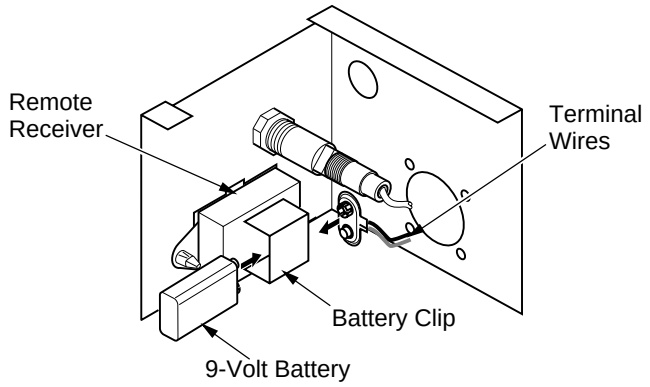

Figure 30 - Installing Battery in Remote Receiver

Installing 9-Volt Battery (Not Included) in Hand-Held Remote Control Unit

1. Remove battery cover on back of remote control unit.
2. Attach terminal wires to the battery. Place battery into the battery housing.
3. Replace battery cover onto remote control unit.

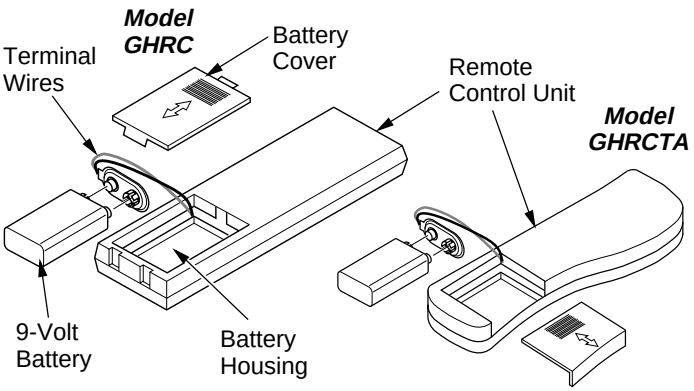

Figure 31 - Installing Battery in Hand-Held Remote Control Unit

OPERATING FIREPLACE INSERT

FOR YOUR SAFETY READ BEFORE LIGHTING

⚠ WARNING: If you do not follow these instructions exactly, a fire or explosion may result causing property damage, personal injury or loss of life.

A. This appliance has a pilot which must be lighted by hand. When lighting the pilot, follow these instructions exactly.

B. BEFORE LIGHTING smell all around the appliance area for gas. Be sure to smell next to the floor because some gas is heavier than air and will settle on the floor.

WHAT TO DO IF YOU SMELL GAS
- **Do not try to light any appliance.**
- **Do not touch any electric switch; do not use any phone in your building.**
- **Immediately call your gas supplier from a neighbor's phone. Follow the gas supplier's instructions.**
- **If you cannot reach your gas supplier, call the fire department.**

C. Use only your hand to push in or turn the gas control knob. Never use tools. If the knob will not push in or turn by hand, don't try to repair it, call a qualified service technician or gas supplier. Force or attempted repair may result in a fire or explosion.

D. Do not use this appliance if any part has been under water. Immediately call a qualified service technician to inspect the appliance and to replace any part of the control system and any gas control which has been under water.

LIGHTING INSTRUCTIONS

⚠ WARNING: You must operate this heater with the fireplace insert screen in place. Make sure fireplace insert screen is installed before running fireplace insert.

NOTICE: During initial operation of new fireplace insert, burning logs will give off a paper-burning smell. Open damper or window to vent smell. This will only last a few hours.

1. **STOP! Read the safety information above.**
2. **Make sure equipment shutoff valve is fully open.**
3. **Set switch to OFF position.**

⚠ WARNING: Burners will come on automatically within one minute when the remote selector switch is in the ON position after the pilot is lit.

OPERATING FIREPLACE INSERT
Continued

4. **Press in and turn control knob clockwise to the OFF position.**
5. **Wait five (5) minutes to clear out any gas. Then smell for gas, including near the floor. If you smell gas, STOP! Follow "B" in the safety information in column 2, page 15. If you don't smell gas, go to the next step.**
6. **Press in and turn control knob counterclockwise to the PILOT position. Press in control knob for five (5) seconds (see Figure 32).**

   Note: **You may be running this heater for the first time after hooking up to gas supply. If so, the control knob may need to be pressed in for 30 seconds or more. This will allow air to bleed from the gas system.**
7. **With control knob pressed in, press and release ignitor button. This will light pilot. The pilot is attached to the front burner. If needed, keep pressing ignitor button until pilot lights.**

   Note: **If pilot does not stay lit, contact a qualified service person or gas supplier for repairs. Until repairs are made, light pilot with match. To light pilot with match, see *Manual Lighting Procedure*.**
8. **Keep control knob pressed in for 30 seconds after lighting pilot. After 30 seconds, release control knob.**
   - **If control knob does not pop out when released, contact a qualified service person or gas supplier for repairs.**

   Note: **If pilot goes out, repeat steps 4 through 8.**
9. **Slightly push in and turn control knob counterclockwise to the ON position.**
10. **Wait one minute and switch selector switch to the ON position to light burners.**
11. **Set flame adjustment knob to any level between HI and LO.**

⚠ CAUTION: Do not try to adjust heating levels by using the equipment shutoff valve.

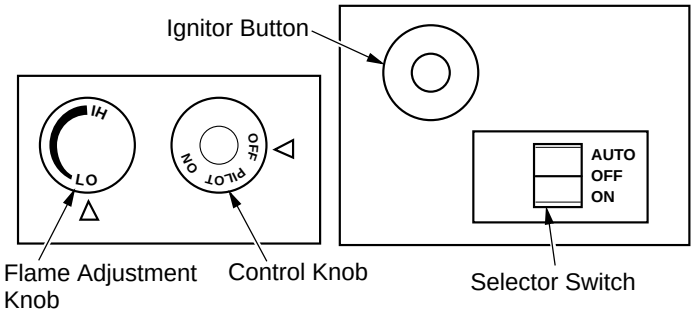

Figure 32 - Control Knob and Ignitor Button Location (Shown as Supplied, No Control Options)

⚠ WARNING: Make sure the selector switch is in the OFF position when you are away from home for long periods of time. Heater will come on automatically with selector switch in the ON position.

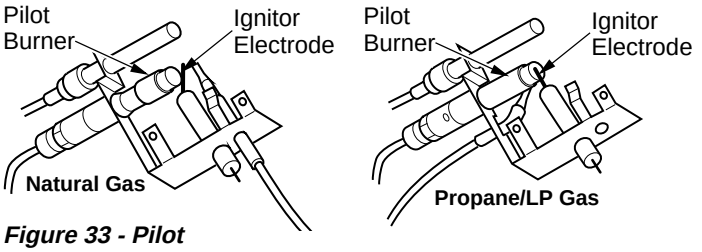

Figure 33 - Pilot

TO TURN OFF GAS TO APPLIANCE

Shutting Off Heater

1. **Turn control knob clockwise to the OFF position.**

2a. **Set selector switch in the OFF position.**

2b. **If Using Optional Hand-Held Remote: Set remote selector switch in the OFF position to keep from draining battery.**

Shutting Off Burners Only (pilot stays lit)

You may shut off the burners and keep the pilot lit by doing one of the following:

- **Turn control knob clockwise to the PILOT position.**
- **Use remote control manual OFF button.**
- **Set remote selector switch in the OFF position.**

MANUAL LIGHTING PROCEDURE

1. **Follow steps 1 through 6 under *Lighting Instructions*, page 15 and column 1.**
2. **Depress control knob and light pilot with match.**
3. **Keep control knob pressed in for 30 seconds after lighting pilot. After 30 seconds, release control knob. Now follow steps 9 through 11, column 1.**

OPERATING FIREPLACE INSERT
Continued

OPTIONAL REMOTE OPERATION

Note: **All remote control accessories must be purchased separately (see *Accessories,* page 30). Follow instructions included with the remote control.**

Thermostat Control Operation

(Optional GHRCTA Series Only) The thermostat control setting on the remote control unit can be set to any comfort level between WARMER and COOLER. The burners will turn on and off automatically to maintain the comfort level you select. The ideal comfort setting will vary by household depending upon the amount of space to be heated, the output of the central heating system, etc.

For wall thermostat operation, follow instruction supplied with thermostat accessory GWMT1. For wall switch operation follow instructions supplied with GWMS2.

NOTICE: You must light the pilot before using the hand-held remote control unit. See *Lighting Instructions* on pages 15 and 16.

1. **After lighting, let pilot flame burn for about one minute. Turn control knob to ON position. Adjust flame adjustment knob anywhere between HI and LO. Slide the remote selector switch to the REMOTE position (see Figure 34).**
   Note: **The burners may light if hand-held remote ON button was on when remote selector switch was last turned off. You can now turn the burners on and off with the hand-held remote control unit.**
   IMPORTANT**: Do not leave the remote selector switch in the REMOTE position when the pilot is not lit. This will drain the battery.**
   IMPORTANT: **Be sure to press the ON/OFF buttons on the hand-held remote control unit for up to 3 seconds to assure proper operation.**

GHRC Series Operation:

2a. **Press the ON/OFF button to turn the burner on and off. When turning burner off, the pilot will remain lit.**

GHRCTA Series Operation:

2b. **Press the AUTO/ON/OFF button on the hand-held remote control (see Figure 35). The lights to the left of the button will show AUTO, ON, or OFF.**
   - **In the ON mode, the burners will ignite. The heater is in manual mode when ON is lit.**
   - **In the AUTO mode, the thermostat in the hand-held remote unit controls the room temperature. To increase the room temperature, press the top arrow of the TEMP button. To lower the room temperature, press the bottom arrow of the TEMP button. At higher settings the heater will run longer.**
     IMPORTANT: **This remote control has been specially engineered to take an air temperature sample every 5.5 minutes in the auto mode. It will not respond immediately to the temperature setting being turned up or down.**
     IMPORTANT: **The hand-held remote control unit must be near the heater. Do not keep the hand-held remote control unit too close to the heater. The thermostat on the hand-held remote control unit will heat up too quickly and turn the heater off.**

3. **To turn the burner off, press the AUTO/ON/OFF button until OFF lights. The pilot will remain lit.**
   IMPORTANT: **To turn the pilot off, manually turn the control knob on the heater to the OFF position.**

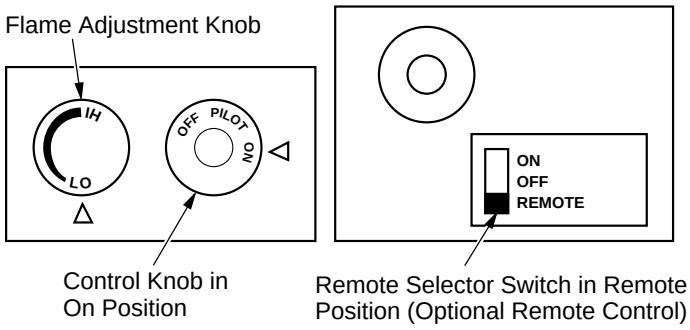

Figure 34 - Setting the Remote Selector Switch, Control Knob, and Flame Adjustment Knob for Remote Operation

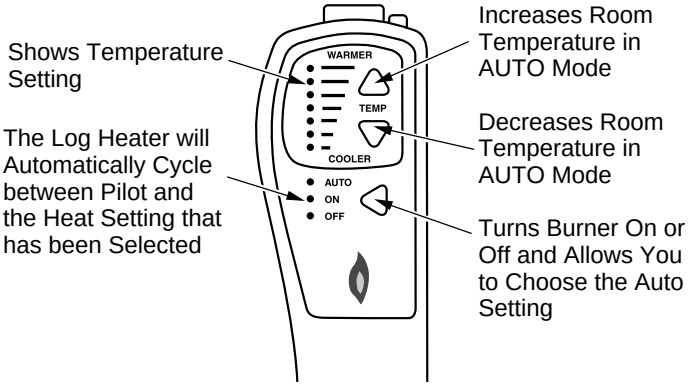

Figure 35 - Thermostat Hand-Held Remote Control Unit Selections (GHRCTA Series only)

OPERATING FIREPLACE INSERT
Continued

OPTIONAL BLOWER OPERATION

Locate the blower switch by opening lower louver on fireplace insert. Blower switch is located at lower left inside louver door.

This thermostat-controlled blower has a variable speed control that operates the blower. The blower will start when the thermostat senses a sufficient increase in firebox temperature.

Note: **Your gas logs and thermostat blower will not turn on and off at the same time. The fireplace insert may run for several minutes before the blower turns on. After the heater modulates to the pilot position, the blower will continue to run. The blower will shut off after the firebox temperature decreases.**

Note: **It is safe to operate fireplace insert with blower turned off. However, the blower helps distribute heated air from the fireplace insert.**

INSPECTING BURNERS

Check pilot flame pattern and burner flame patterns often.

PILOT FLAME PATTERN

Figure 36 shows a correct pilot flame pattern. Figure 37 shows an incorrect pilot flame pattern. The incorrect pilot flame is not properly heating the thermocouple. When the thermocouple cools, the heater will shut down.

If pilot flame pattern is incorrect, as shown in Figure 37

- turn heater off (see *To Turn Off Gas to Appliance*, page 16)
- see *Troubleshooting*, pages 20 through 22

Note: The pilot flame on natural gas units will have a slight curve, but flame should be blue and have no yellow or orange color.

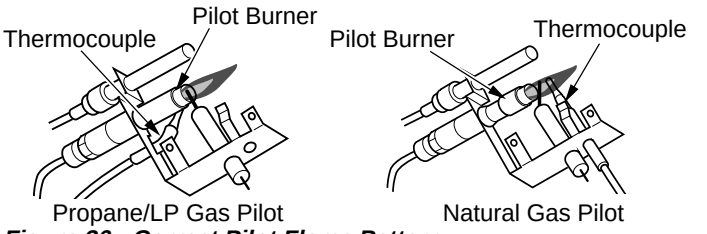

Figure 36 - Correct Pilot Flame Pattern

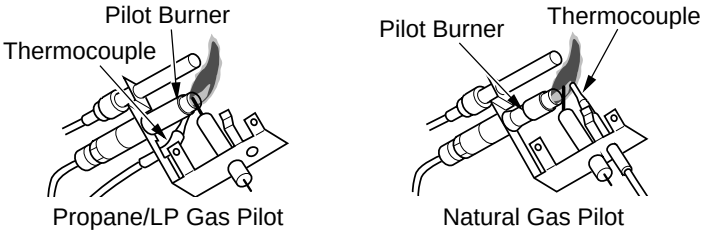

Figure 37 - Incorrect Pilot Flame Pattern

BURNER PRIMARY AIR HOLES

Air is drawn into the burner through the holes in the fitting at the burner entrance. These holes may become blocked with dust or lint. Periodically inspect these holes for any blockage and clean if needed. Blocked air holes will create soot.

MAIN BURNER

Periodically inspect all burner flame holes with the heater running. All slotted burner flame holes should be open with yellow flame present. All round burner flame holes should be open with a small blue flame present. Some burner flame holes may become blocked by debris or rust, with no flame present. If so, turn off heater and let cool. Remove blockage, blocked burner flame holes will create soot.

BURNER FLAME PATTERN

Figure 38 shows a correct burner flame pattern. Figure 39 shows an incorrect burner flame pattern. If burner flame pattern is incorrect,

- turn heater off (see *To Turn Off Gas to Appliance*, page 16)
- see *Troubleshooting*, pages 20 through 22

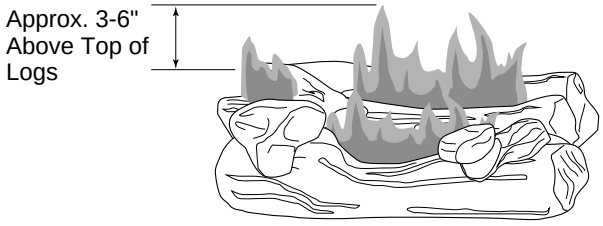

Figure 38 - Correct Flame Pattern with Control Knob Set to High Flame.

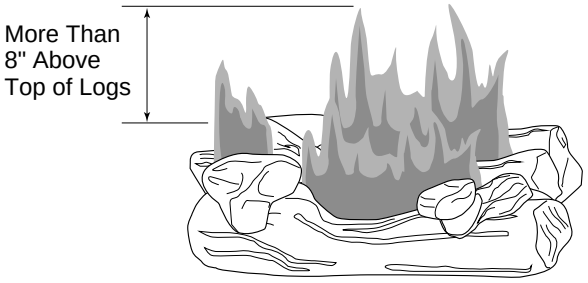

Figure 39 - Incorrect Flame Pattern with Control Knob Set to High Flame

CLEANING AND MAINTENANCE

⚠ WARNING: Turn off heater and let cool before cleaning.

⚠ CAUTION: You must keep control areas, burner, and circulating air passageways of heater clean. Inspect these areas of heater before each use. Have heater inspected yearly by a qualified service person. Heater may need more frequent cleaning due to excessive lint from carpeting, pet hair, bedding material, etc.

CLEANING BURNER INJECTOR HOLDER AND PILOT AIR INLET HOLE

The primary air inlet holes allow the proper amount of air to mix with the gas. This provides a clean burning flame. Keep these holes clear of dust, dirt, lint, and pet hair. Clean these air inlet holes prior to each heating season. Blocked air holes will create soot. We recommend that you clean the unit every three months during operation and have heater inspected yearly by a qualified service person.

We also recommend that you keep the burner tube and pilot assembly clean and free of dust and dirt. To clean these parts we recommend using compressed air no greater than 30 PSI. Your local computer store, hardware store, or home center may carry compressed air in a can. You can use a vacuum cleaner in the blow position. If using compressed air in a can, please follow the directions on the can. If you don't follow directions on the can, you could damage the pilot assembly.

1. Shut off the unit, including the pilot. Allow the unit to cool for at least thirty minutes.
2. Inspect burner, pilot, and primary air inlet holes on injector holder for dust and dirt (see Figure 40).
3. Blow air through the ports/slots and holes in the burner.
4. Check the injector holder located at the end of the burner tube again. Remove any large particles of dust, dirt, lint, or pet hair with a soft cloth or vacuum cleaner nozzle.
5. Blow air into the primary air holes on the injector holder.
6. In case any large clumps of dust have now been pushed into the burner repeat steps 3 and 4.

Clean the pilot assembly also. A yellow tip on the pilot flame indicates dust and dirt in the pilot assembly. There is a small pilot air inlet hole about two inches from where the pilot flame comes out of the pilot assembly (see Figure 41). With the unit off, lightly blow air through the air inlet hole. You may blow through a drinking straw if compressed air is not available.

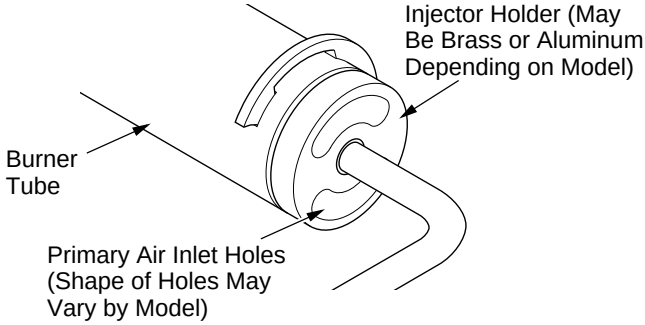

Figure 40 - Injector Holder On Outlet Burner Tube

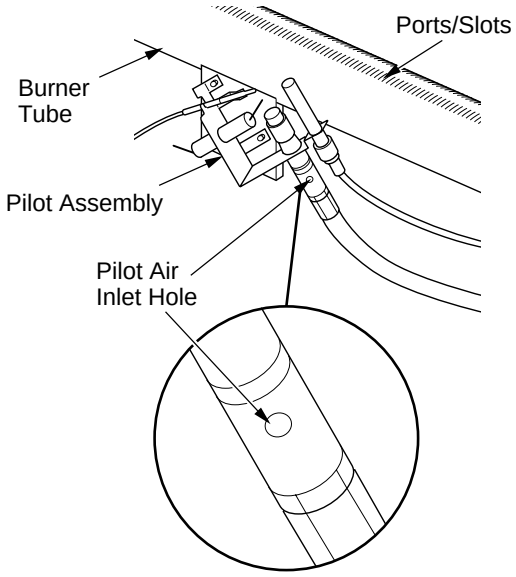

Figure 41 - Pilot Inlet Air Hole

LOGS

- If you remove logs for cleaning, refer to *Installing Logs,* pages 13 and 14, to properly replace logs.
- Replace log(s) if broken or chipped (dime-sized or larger).

BURNER PRIMARY AIR HOLES

Air is drawn into the burner through the holes in the fitting at the burner entrance. These holes may become blocked with dust or lint. Periodically inspect these holes for any blockage and clean if needed. Blocked air holes will create soot.

MAIN BURNER

Periodically inspect all burner flame holes with the heater running. All slotted burner flame holes should be open with yellow flame present. All round burner flame holes should be open with a small blue flame present. Some burner flame holes may become blocked by debris or rust, with no flame present. If so, turn off heater and let cool. Remove blockage, blocked burner flame holes will create soot.

TROUBLESHOOTING

Note: For additional help, visit DESA International's technical service web site at **www.desatech.com**.

⚠ WARNING: Turn off heater and let cool before servicing. Only a qualified service person should service and repair heater.

⚠ CAUTION: Never use a wire, needle, or similar object to clean ODS/pilot. This can damage ODS/pilot unit.

Note: All troubleshooting items are listed in order of operation.

OBSERVED PROBLEM	POSSIBLE CAUSE	REMEDY
When ignitor button is pressed, there is no spark at ODS/pilot	1. Ignitor electrode not connected to ignitor cable	1. Reconnect ignitor cable
	2. Ignitor cable pinched or wet	2. Free ignitor cable if pinched by any metal or tubing. Keep ignitor cable dry
	3. Piezo ignitor nut is loose	3. Tighten nut holding piezo ignitor to base panel of log set. Nut is located behind base panel
	4. Broken ignitor cable	4. Replace ignitor cable
	5. Bad piezo ignitor	5. Replace piezo ignitor
	6. Ignitor electrode broken	6. Replace pilot assembly
	7. Ignitor electrode positioned wrong	7. Replace pilot assembly
When ignitor button is pressed, there is spark at ODS/pilot but no ignition	1. Gas supply turned off or equipment shutoff valve closed	1. Turn on gas supply or open equipment shutoff valve
	2. Control knob not in PILOT position	2. Turn control knob to PILOT position
	3. Control knob not pressed in while in PILOT position	3. Press in control knob while in PILOT position
	4. Air in gas lines when installed	4. Continue holding down control knob. Repeat igniting operation until air is removed
	5. Depleted gas supply (propane/LP only)	5. Contact local propane/LP gas company
	6. ODS/pilot is clogged	6. Clean ODS/pilot (see *Cleaning and Maintenance*, page 19) or replace ODS/pilot assembly
	7. Gas regulator setting is not correct	7. Replace gas control
ODS/pilot lights but flame goes out when control knob is released	1. Control knob not fully pressed in	1. Press in control knob fully
	2. Control knob not pressed in long enough	2. After ODS/pilot lights, keep control knob pressed in 30 seconds
	3. Equipment shutoff valve not fully open	3. Fully open equipment shutoff valve
	4. Pilot flame not touching thermocouple, which allows thermocouple to cool, causing pilot flame to go out. This problem could be caused by one or both of the following: A) Low gas pressure B) Dirty or partially clogged ODS/pilot	4. A) Contact local natural or propane/LP gas company B) Clean ODS/pilot (see *Cleaning and Maintenance*, page 19) or replace ODS/pilot assembly
	5. Thermocouple connection loose at control valve	5. Hand tighten until snug, then tighten 1/4 turn more
	6. Thermocouple damaged	6. Replace pilot assembly
	7. Control valve damaged	7. Replace control valve

TROUBLESHOOTING
Continued

OBSERVED PROBLEM	POSSIBLE CAUSE	REMEDY
Burner does not light after ODS/pilot is lit	1. Burner orifice clogged	1. Clean burner (see *Cleaning and Maintenance*, page 19) or replace burner orifice
	2. Inlet gas pressure is too low	2. Contact local natural or propane/LP gas company
	3. Thermopile leads disconnected or improperly connected	3. Reconnect leads (see *Wiring Diagram*, page 23)
	4. Burners will not come on in remote position	4. Replace battery in transmitter and receiver
Delayed ignition burner	1. Manifold pressure is too low	1. Contact local natural or propane/LP gas company
	2. Burner orifice clogged	2. Clean burner (see *Cleaning and Maintenance*, page 19) or replace burner orifice
Burner backfiring during combustion	1. Burner orifice is clogged or damaged	1. Clean burner (see *Cleaning and Maintenance*, page 19) or replace burner orifice
	2. Damaged burner	2. Replace damaged burner
	3. Gas regulator defective	3. Replace gas control
Slight smoke or odor during initial operation	1. Not enough air	1. Check burner for dirt and debris. If found, clean burner (see *Cleaning and Maintenance*, page 19)
	2. Gas regulator defective	2. Replace gas control
	3. Residues from manufacturing processes and logs curing	3. Problem will stop after a few hours of operation
Moisture/condensation noticed on windows	1. Not enough combustion/ventilation air	1. Refer to *Air for Combustion and Ventilation* requirements (page 4)
Heater produces a whistling noise when burner is lit	1. Turning control knob to HI position when burner is cold	1. Turn control knob to LO position and let warm up for a minute
	2. Air in gas line	2. Operate burner until air is removed from line. Have gas line checked by local natural or propane/LP gas company
	3. Air passageways on heater blocked	3. Observe minimum installation clearances (see page 9)
	4. Dirty or partially clogged burner orifice	4. Clean burner (see *Cleaning and Maintenance*, page 19) or replace burner orifice
White powder residue forming within burner box or on adjacent walls or furniture	1. When heated, vapors from furniture polish, wax, carpet cleaners, etc. may turn into white powder residue	1. Turn heater off when using furniture polish, wax, cleaners, or similar products
Remote does not function (GHRC and GHRCTA Series only)	1. Battery is not installed. Battery power is low	1. Replace 9-volt batteries in receiver and remote control

TROUBLESHOOTING
Continued

⚠ WARNING: If you smell gas
- **Shut off gas supply.**
- **Do not try to light any appliance.**
- **Do not touch any electrical switch; do not use any phone in your building.**
- **Immediately call your gas supplier from a neighbor's phone. Follow the gas supplier's instructions.**
- **If you cannot reach your gas supplier, call the fire department.**

IMPORTANT: Operating fireplace insert where impurities in air exist may create odors. Cleaning supplies, paint, paint remover, cigarette smoke, cements and glues, new carpet or textiles, etc., create fumes. These fumes may mix with combustion air and create odors. These odors will disappear over time.

OBSERVED PROBLEM	POSSIBLE CAUSE	REMEDY
Fireplace insert produces a clicking/ticking noise just after burners are lit or shut off	1. Metal expanding while heating or contracting while cooling	1. This is common with most fireplaces. If noise is excessive, contact qualified service person
Fireplace insert produces unwanted odors	1. Fireplace insert burning vapors from paint, hair spray, glues, cleaners, chemicals, new carpet, etc. (see *IMPORTANT* statement above) 2. Gas leak. **See Warning statement above**	1. Open window and ventilate room. Stop using odor causing products while fireplace insert is running 2. Locate and correct all leaks (see *Checking Gas Connections*, page 12)
Fireplace insert shuts off in use (ODS operates)	1. Not enough fresh air is available 2. Low line pressure 3. ODS/pilot is partially clogged	1. Open window and/or door for ventilation 2. Contact local natural or propane/LP gas company 3. Clean ODS/pilot (see *Cleaning and Maintenance*, page 19)
Gas odor even when control knob is in OFF position	1. Gas leak. **See Warning statement above** 2. Control valve defective	1. Locate and correct all leaks (see *Checking Gas Connections*, page 12) 2. Replace control valve
Gas odor during combustion	1. Foreign matter between control valve and burner 2. Gas leak. **See Warning statement above**	1. Take apart gas tubing and remove foreign matter 2. Locate and correct all leaks (see *Checking Gas Connections*, page 12)
Dark residue on logs or inside of fireplace insert. *Note:* After removing all causes of residue deposits, completely clean fireplace and appliance of all residue before reusing appliance	1. Improper log placement 2. Drafts or other air currents affecting flame pattern 3. Air holes at burner inlet blocked 4. Burner flame holes blocked	1. Properly locate logs (see *Installing Logs*, pages 13 and 14) 2. Eliminate source of drafts around heater 3. Clean out air holes at burner inlet. Periodically repeat as needed 4. Remove blockage

WIRING DIAGRAMS

Note: For proper operation of optional accessories, the wires from the switch to the control must be connected exactly as shown in Figure 42.

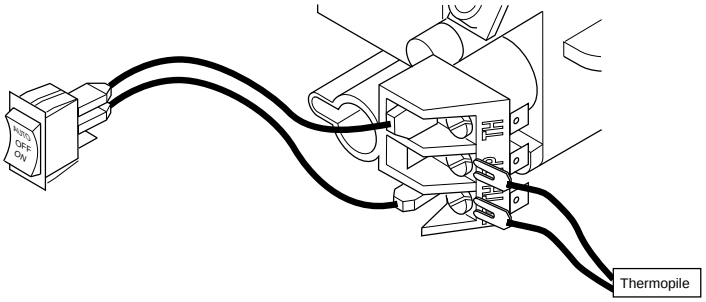

Figure 42 - Switch Wiring Diagram

⚠ CAUTION: Label all wires prior to disconnection when servicing controls. Wiring errors can cause improper and dangerous operation. Verify proper operation after servicing.

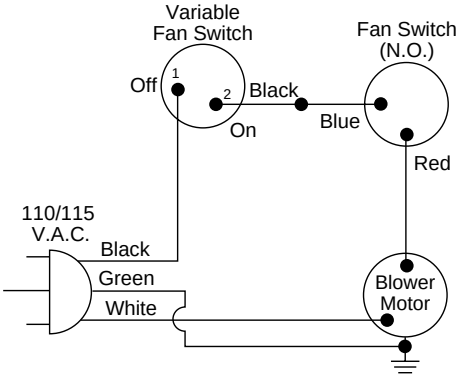

Figure 43 - Blower Wiring Diagram

SPECIFICATIONS

	VI33NRA	VI33PRA
Btu (Variable)	20,000/30,000	20,000/33,000
Type Gas	Natural Gas Only	Propane/LP Only
Ignition	PiezoPiezo	
Pressure Manifold	3.5" W.C.	8.0" W.C.
Inlet Gas Pressure (in. of water)		
Maximum	10.5"	14"
Minimum*	5"	11"

* For input adjustment

REPLACEMENT PARTS

Note: Use only original replacement parts. This will protect your warranty coverage for parts replaced under warranty.

PARTS UNDER WARRANTY

Contact authorized dealers of this product. If they can't supply original replacement part(s), call DESA International's Technical Service Department at 1-866-672-6040. When calling DESA International, have ready

- your name and address
- model and serial numbers of your heater
- how heater was malfunctioning
- type of gas used (propane/LP or natural gas)
- purchase date

Usually, we will ask you to return the part to the factory.

PARTS NOT UNDER WARRANTY

Contact authorized dealers of this product. If they can't supply original replacement part(s), call DESA International at 1-866-672-6040 for referral information. When calling DESA International, have ready

- model number of your heater
- the replacement part number

SERVICE HINTS

When Gas Pressure Is Too Low

- pilot will not stay lit
- burners will have delayed ignition
- heater will not produce specified heat
- for propane/LP unit, propane/LP gas supply may be low

You may feel your gas pressure is low. If so, contact your local gas supplier.

TECHNICAL SERVICE

You may have further questions about installation, operation, or troubleshooting. If so, contact DESA International's Technical Service Department at 1-866-672-6040. When calling please have your model and serial numbers of your heater ready.

You can also visit DESA International's technical services web site at **www.desatech.com.**

ILLUSTRATED PARTS BREAKDOWN

REMOTE READY MODEL

VI33NRA

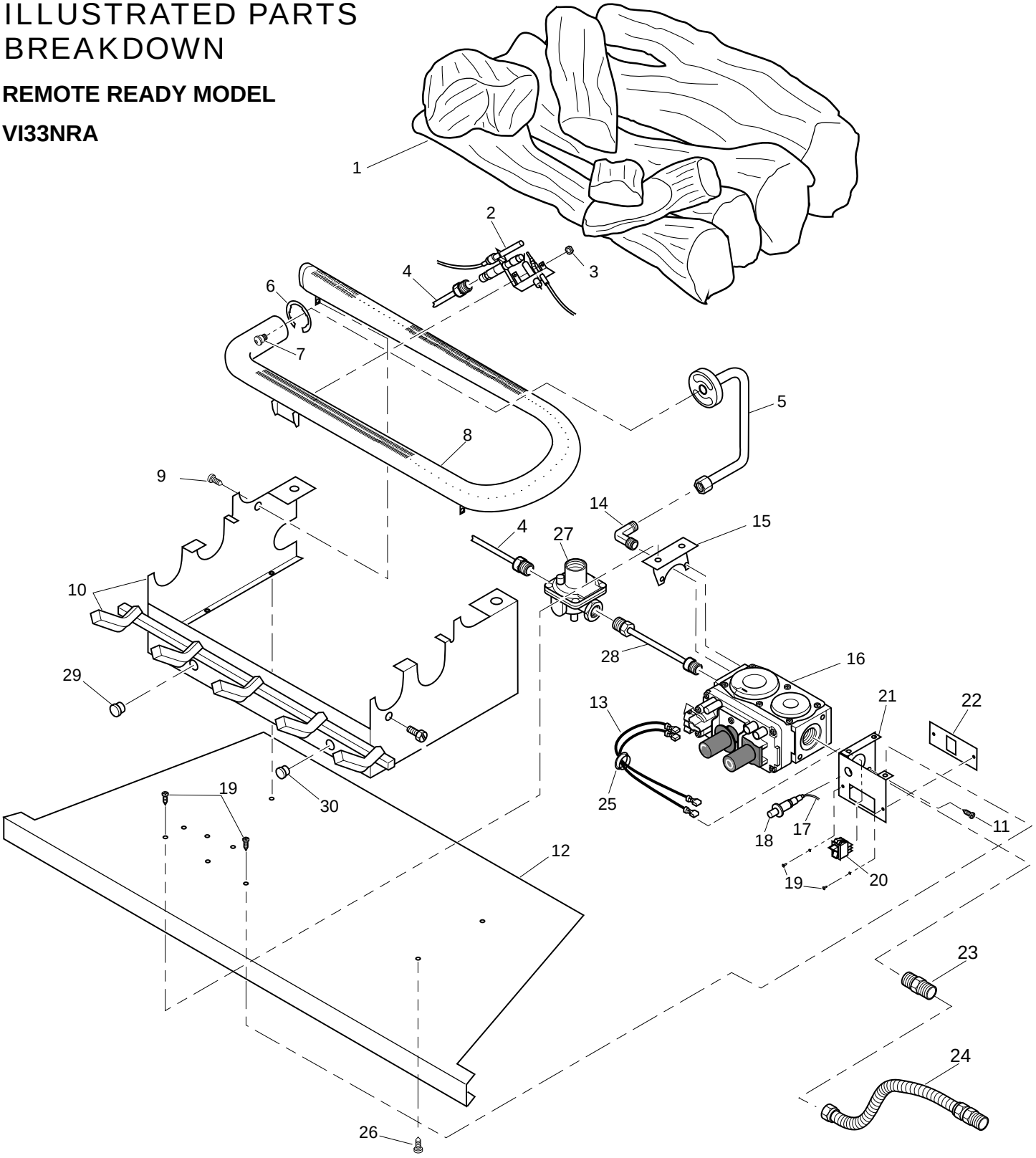

PARTS LIST

This list contains replaceable parts used in your fireplace insert. When ordering parts, follow the instructions listed under *Replacement Parts* on page 23 of this manual.

REMOTE READY MODEL

VI33NRA

KEY NO.	PART NUMBER	DESCRIPTION	QTY.
1	102785-03	Log, Golden Oak	1
2	103779-01	ODS Pilot (NG)	1
3	098249-01	ODS Nut	2
4	100609-01	Pilot Tube (Regulator to Pilot)	1
5	104229-04	Burner Outlet Tube	1
6	102843-01	Burner Clip	1
7	099056-26	Burner Orifice Injector	1
8	102772-01	Burner	2
9	M11084-38	Screw, #8 x .38	2
10	104236-03CK	Painted Base Assy	1
11	M12461-26	Screw, #10 x .32	4
12	104238-04CK	Firebox Bottom	1
13	103284-03	Wiring Harness	1
14	098265-02	Elbow, Male	1
15	103782-01	Valve Bracket	1
16	103781-01	Gas Control Valve	1
17	098271-03	Ignitor Cable	1
18	102445-01	Piezo Ignitor	1
19	098304-01	Screw	7
20	099998-01	Switch	1
21	104241-01	Remote Switch Bracket	1
22	103587-01CK	Switch Plate	1
23	097809-02	Male Connector	1
24	101628-03	Flexible Connector (Hose)	1
25	M50104-02	Bushing	1
26	M11084-26	Screw, #10 x .38	4
27	099918-02	Pilot Regulator	1
28	099387-07	Pilot Tube (Valve to Regulator)	1
29	103977-02	Button Plug 3/4"	1
30	103977-01	Button Plug 5/8"	1
PARTS AVAILABLE — NOT SHOWN			
	103877-01	Lighting Instruction Plate	1
	100563-01	Warning Plate	1

ILLUSTRATED PARTS BREAKDOWN

REMOTE READY MODEL

VI33PRA

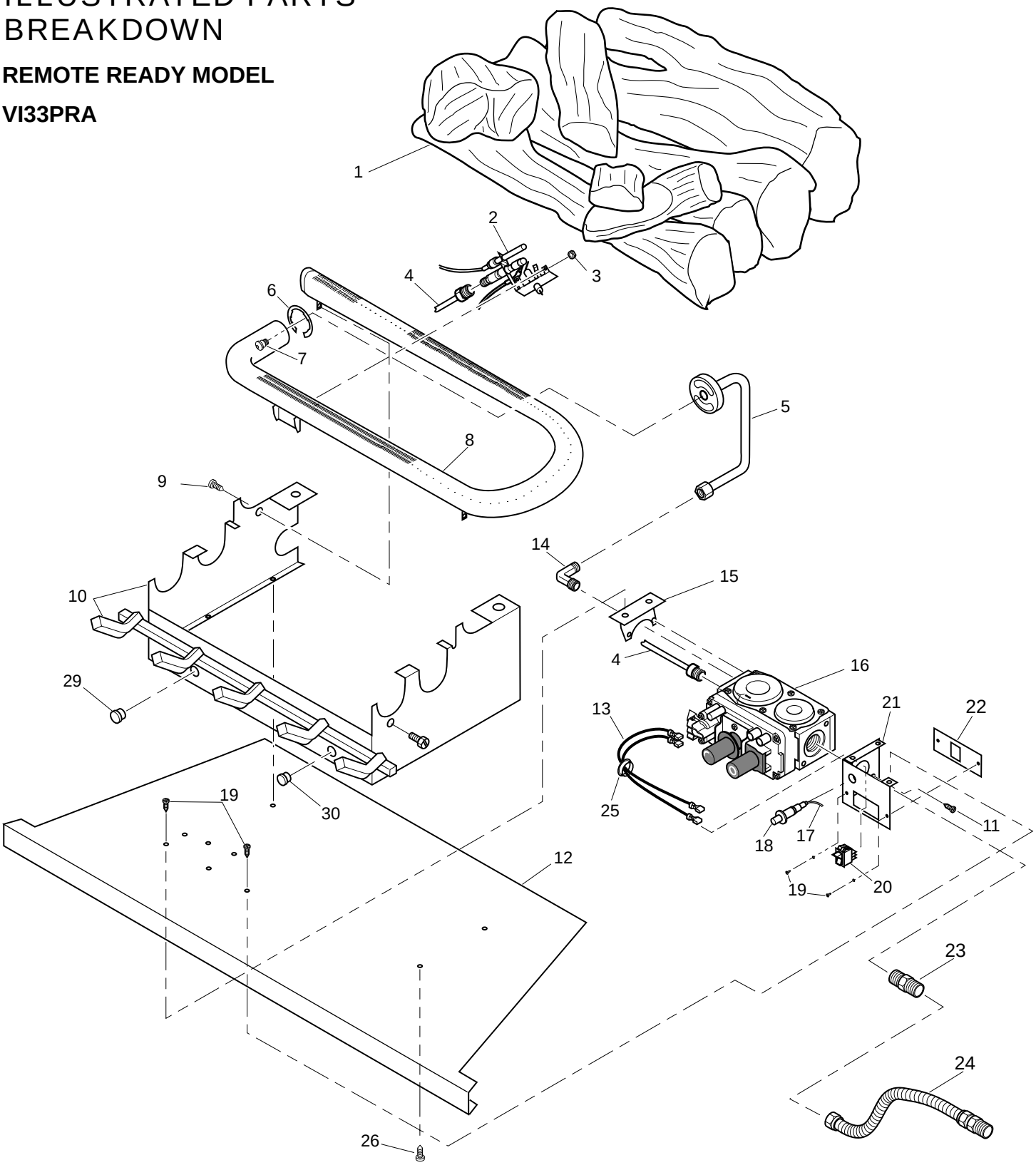

PARTS LIST

This list contains replaceable parts used in your fireplace. When ordering parts, follow the instructions listed under *Replacement Parts* on page 23 of this manual.

REMOTE READY MODEL

VI33PRA

KEY NO.	PART NUMBER	DESCRIPTION	QTY.
1	102785-03	Log, Golden Oak	1
2	103778-01	ODS Pilot (Propane/LP)	1
3	098249-01	ODS Nut	2
4	099387-07	Pilot Tube	1
5	104229-04	Burner Outlet Tube	1
6	102843-01	Burner Clip	1
7	099056-19	Burner Orifice Injector	1
8	102772-01	Burner	2
9	M11084-38	Screw, #8 x .38	2
10	104236-03CK	Painted Base Assy	1
11	M12461-26	Screw, #10 x .32	4
12	104238-04CK	Firebox Bottom	1
13	103284-03	Wiring Harness	1
14	098265-02	Elbow, Male	1
15	103782-01	Valve Bracket	1
16	103781-02	Gas Control Valve	1
17	098271-03	Ignitor Cable	1
18	102445-01	Piezo Ignitor	1
19	098304-01	Screw	7
20	099998-01	Switch	1
21	104241-01	Remote Switch Bracket	1
22	103587-01CK	Switch Plate	1
23	097809-02	Male Connector	1
24	101628-03	Flexible Connector (Hose)	1
25	M50104-02	Bushing	1
26	M11084-26	Screw, #10 x .38	4
29	103977-02	Button Plug 3/4"	1
30	103977-01	Button Plug 5/8"	1
PARTS AVAILABLE — NOT SHOWN			
	103877-01	Lighting Instruction Plate	1
	100563-01	Warning Plate	1

ILLUSTRATED PARTS BREAKDOWN

FIREPLACE INSERT

VI33NRA
VI33PRA

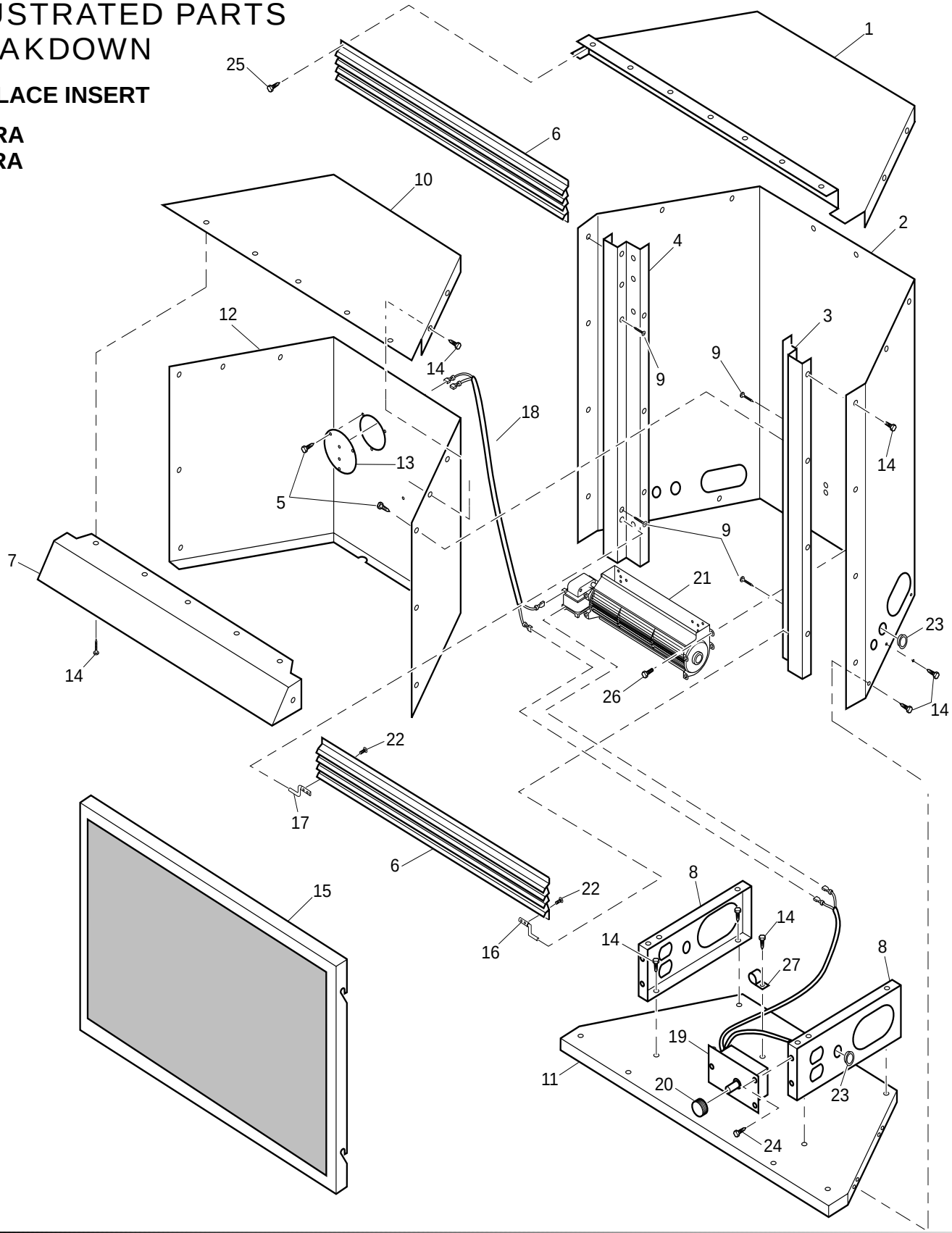

PARTS LIST

This list contains replaceable parts used in your fireplace insert. When ordering parts, follow the instructions listed under *Replacement Parts* on page 23 of this manual.

FIREPLACE INSERT

VI33NRA
VI33PRA

KEY NO.	PART NUMBER	DESCRIPTION	QTY.
1	105517-01	Top Outer Casing	1
2	105233-01	Outer Casing	1
3	105231-01CK	Right Front Side	1
4	105230-01CK	Left Front Side	1
5	098304-01	Phillips Pan Head Screw, #10	9
6	102455-02	Louvered Door	2
7	105518-01CK	Firebox Hood	1
8	101348-01	Firebox Support	2
9	099230-02	Shoulder Screw	4
10	101872-03	Firebox Top	1
11	101346-01	Outer Base	1
12	105232-01CK	Firebox Wrapper	1
13	101614-02	Cover and Switch Assembly	1
14	M11084-26	Hex Screw, #10	46
15	105519-01CK	Screen Assembly	1
16	104313-01	Right Pin Hinge	1
17	104313-02	Left Pin Hinge	1
18	101398-03	Wiring Harness	1
19	105649-01	Blower Speed Control	1
20	103650-01	Knob	1
21	103581-01	Blower	1
22	M10908-2	Hex Washer Head Screw	4
23	101629-01	Plastic Bushing	2
24	M11084-38	Hex Screw, #8	2
25	098304-03	Phillips Pan Head Screw, #8	4
26	M11084-38	Hex Screw, # 3 x 3/8" Blunt Tip	4
27	098544-01	Clamp	1
PARTS AVAILABLE — NOT SHOWN			
	101784-01	Magnet Catch	2
	102307-01	Strike Plate	2

ACCESSORIES

Purchase these fireplace insert accessories from your local dealer. If they can not supply these accessories, call DESA International's Sales Department at 1-866-672-6040 for information. You can also write to the address listed on the back page of this manual.

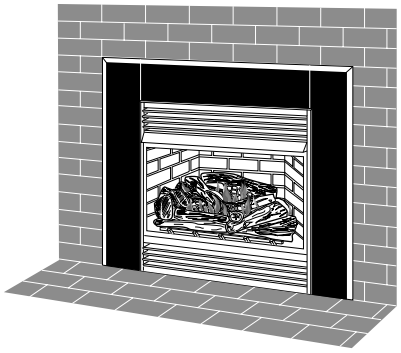

FIREPLACE SURROUND KIT GS38 AND GS43 BLACK (Must use one)

Allows insert to be fitted to fireplace opening. A surround is required for installation.

Note: Use the accessory which best covers the existing masonry fireplace opening.

- Model GS38 Surround Kit (for use with fireplaces with an opening smaller than 30" H and 38" W)
- Model GS43 Surround Kit (for use with fireplaces with an opening 30" to 36 3/4" H and 38" to 43" W)

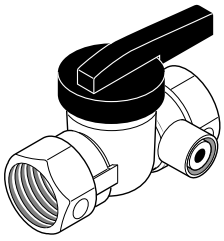

EQUIPMENT SHUTOFF VALVE - GA5010

For all models. Equipment shutoff valve with 1/8" NPT tap. Fits 1/2" NPT pipe.

FIREBOX BRICK LINER G8010 Series (Not Shown)

Ceramic fiber firebox liner adds the look of real brick.

DUPLEX OUTLET KIT GA3555 (Not Shown)

For built-in installation when blower kit is used.

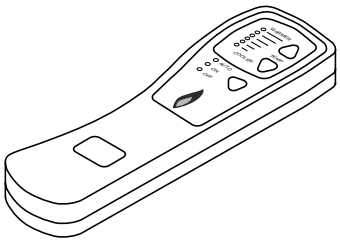

RECEIVER AND HAND-HELD THERMOSTAT REMOTE CONTROL KIT - GHRCTA SERIES

For all models. Allows the gas log heater to be operated in a manually or thermostatically-controlled mode. You can turn the gas log heater on and off without ever leaving the comfort of your easy chair.

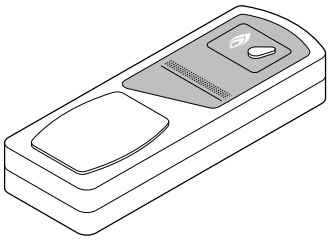

RECEIVER AND HAND-HELD REMOTE CONTROL KIT - GHRC SERIES

For all models. Allows the gas log heater to be turned on and off by using a hand-held remote control.

WALL-MOUNT THERMOSTAT SWITCH - GWMT1 (Not Shown)

For all models. The desired comfort setting can be selected on the wall thermostat and the log heater will automatically cycle from pilot to the heat setting selected.

WALL-MOUNT ON/OFF SWITCH - GWMS2 (Not Shown)

For all models. Allows the gas log heater to be turned on and off with a wall switch.

CLEANING KIT - CCK (Not Shown)

For all models. Your vent-free gas appliance requires regular cleaning and maintenance to prevent performance problems. This kit gives you the tools and instructions to make it easy to clean all critical areas of your appliance.

INFORMATION VIDEO 108917-01

For all models. A care and maintenance video is available by calling 1-866-672-6040.

NOTES

WARRANTY INFORMATION

KEEP THIS WARRANTY

Model _____

Serial No. _____

Date Purchased _____

Always specify model and serial numbers when communicating with the factory.

We reserve the right to amend these specifications at any time without notice. The only warranty applicable is our standard written warranty. We make no other warranty, expressed or implied.

LIMITED WARRANTY
VENT-FREE GAS FIREPLACE

DESA International warrants this product to be free from defects in materials and components for four (4) years from the date of first purchase, provided that the product has been properly installed, operated and maintained in accordance with all applicable instructions. To make a claim under this warranty the Bill of Sale or cancelled check must be presented.

This warranty is extended only to the original retail purchaser. This warranty covers the cost of part(s) required to restore this heater to proper operating condition and an allowance for labor when provided by a DESA Authorized Service Center. Warranty part(s) MUST be obtained through authorized dealers of this product and/or DESA International who will provide original factory replacement parts. Failure to use original factory replacement parts voids this warranty. The heater MUST be installed by a qualified installer in accordance with all local codes and instructions furnished with the unit.

This warranty does not apply to parts that are not in original condition because of normal wear and tear, or parts that fail or become damaged as a result of misuse, accidents, lack of proper maintenance or defects caused by improper installation. Travel, diagnostic cost, labor, transportation and any and all such other costs related to repairing a defective heater will be the responsibility of the owner.

TO THE FULL EXTENT ALLOWED BY THE LAW OF THE JURISDICTION THAT GOVERNS THE SALE OF THE PRODUCT; THIS EXPRESS WARRANTY EXCLUDES ANY AND ALL OTHER EXPRESSED WARRANTIES AND LIMITS THE DURATION OF ANY AND ALL IMPLIED WARRANTIES, INCLUDING WARRANTIES OF MERCHANTABILITY AND FITNESS FOR A PARTICULAR PURPOSE TO FOUR (4) YEARS ON ALL COMPONENTS FROM THE DATE OF FIRST PURCHASE; AND DESA INTERNATIONAL'S LIABILITY IS HEREBY LIMITED TO THE PURCHASE PRICE OF THE PRODUCT AND DESA INTERNATIONAL SHALL NOT BE LIABLE FOR ANY OTHER DAMAGES WHATSOEVER INCLUDING INDIRECT, INCIDENTAL OR CONSEQUENTIAL DAMAGES.

Some states do not allow a limitation on how long an implied warranty lasts or an exclusion or limitation of incidental or consequential damages, so the above limitation on implied warranties, or exclusion or limitation on damages may not apply to you.

This warranty gives you specific legal rights, and you may also have other rights that vary from state to state.

For information about this warranty write:

DESA™ INTERNATIONAL

2701 Industrial Drive
P.O. Box 90004
Bowling Green, KY 42102-9004
www.desatech.com

110150 01

NOT A UPC

110150-01
Rev. A
05/02