Operators Manual

Installation, Operation & Service

Direct Steam Mixer Kettles

MODELS: (T) MKDL-40-T (-CC)
(T) MKDL-60-T (-CC)
(T) MKDL-80-T (-CC))
(T) MKDL-100-T (-CC)
(T) MKDL-125-T (-CC)
(T) MKDL-150-T (-CC)

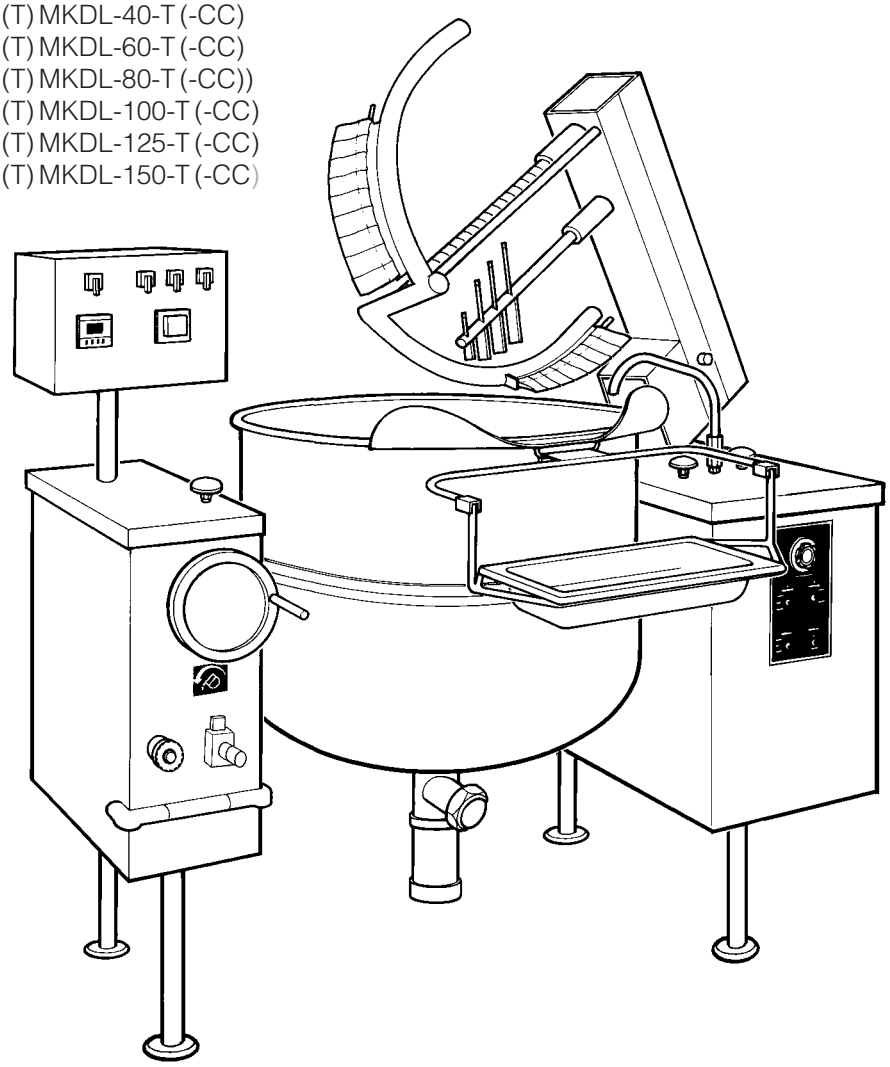

Cleveland

Enodis

1333 East 179th St., Cleveland, Ohio, U.S.A. 44110

Phone: (216) 481-4900 Fax: (216) 481-3782
Visit our web site at www.clevelandrange.com

SE95018 Rev. 5

For your safety

DANGER

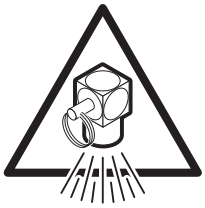

Keep clear of pressure relief discharge.

Keep hands away from moving parts and pinch points.

IMPORTANT

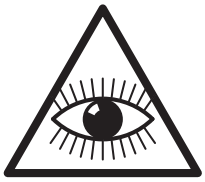

Inspect unit daily for proper operation.

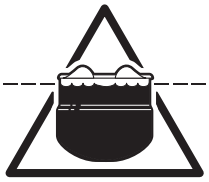

Do not fill kettle above recommended level marked on outside of kettle.

CAUTION

Surfaces may be extremely hot! Use protective equipment.

Wear protective equipment when discharging hot product.

Do not lean on or place objects on kettle lip.

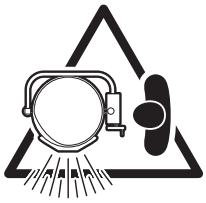

Stand clear of product discharge path when discharging hot product.

SERVICING

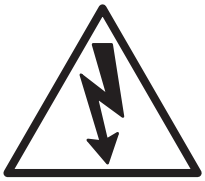

Shut off power at main fuse disconnect prior to servicing.

Ensure kettle is at room temperature and pressure gauge is showing zero or less prior to removing any fittings.

GAS APPLIANCES

Do not attempt to operate this appliance during a power failure.

Keep appliance and area free and clear of combustibles.

INSTALLATION

GENERAL

Installation of the kettle must be accomplished by qualified installation personnel working to all applicable local and national codes. Improper installation of product could cause injury or damage.

This unit is built to comply with applicable standards for manufacturers. Included among those approval agencies are: UL, NSF, ASME/Ntl.Bd., CSA, ETL, CE, and others. Many local codes exist, and it is the responsibility of the owner/installer to comply with these codes.

INSPECTION

Before uncrating, visually inspect the unit for evidence of damage during shipping. If damage is noticed, do not unpack the unit, follow shipping damage instructions.

SHIPPING DAMAGE INSTRUCTIONS

If shipping damage to the unit is discovered or suspected, observe the following guidelines in preparing a shipping damage claim.

1. Write down a description of the damage or the reason for suspecting damage as soon as it is discovered. This will help in filling out the claim forms later. If possible, take a polaroid picture.
2. As soon as damage is discovered or suspected, notify the carrier that delivered the shipment.
3. Arrange for the carrier's representative to examine the damage.
4. Fill out all carrier claims forms and have the examining carrier sign and date each form.

CLEARANCE REQUIREMENTS

This unit must be installed in accordance with the clearances shown on the rating label which is adhered to the unit.

FOR YOUR SAFETY. Keep the appliance area free and clear of combustible materials.

RECOMMENDED FLOOR DRAIN LOCATION

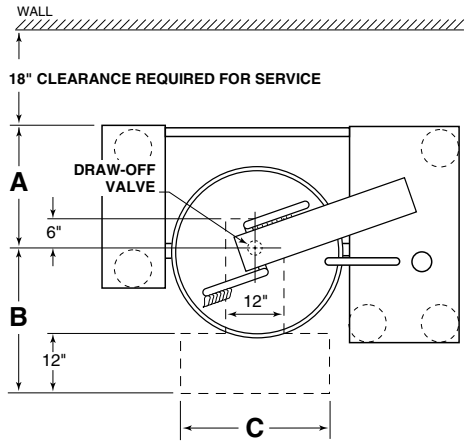

	A	B	C
(**T**) **MKDL-40-T**(-**CC**)	22 1/8"	51"	31"
(**T**) **MKDL-60-T**(-**CC**)	22 1/8"	53"	31"
(**T**) **MKDL-80-T**(-**CC**)	22 1/8"	58"	31"
(**T**) **MKDL-100-T**(-**CC**)	21 3/4"	61"	31"
(**T**) **MKDL-125-T**(-**CC**)	21 3/4"	65"	31"
(**T**) **MKDL-150-T**(-**CC**)	21 3/4"	68"	31"

Recommended Floor Drain Location

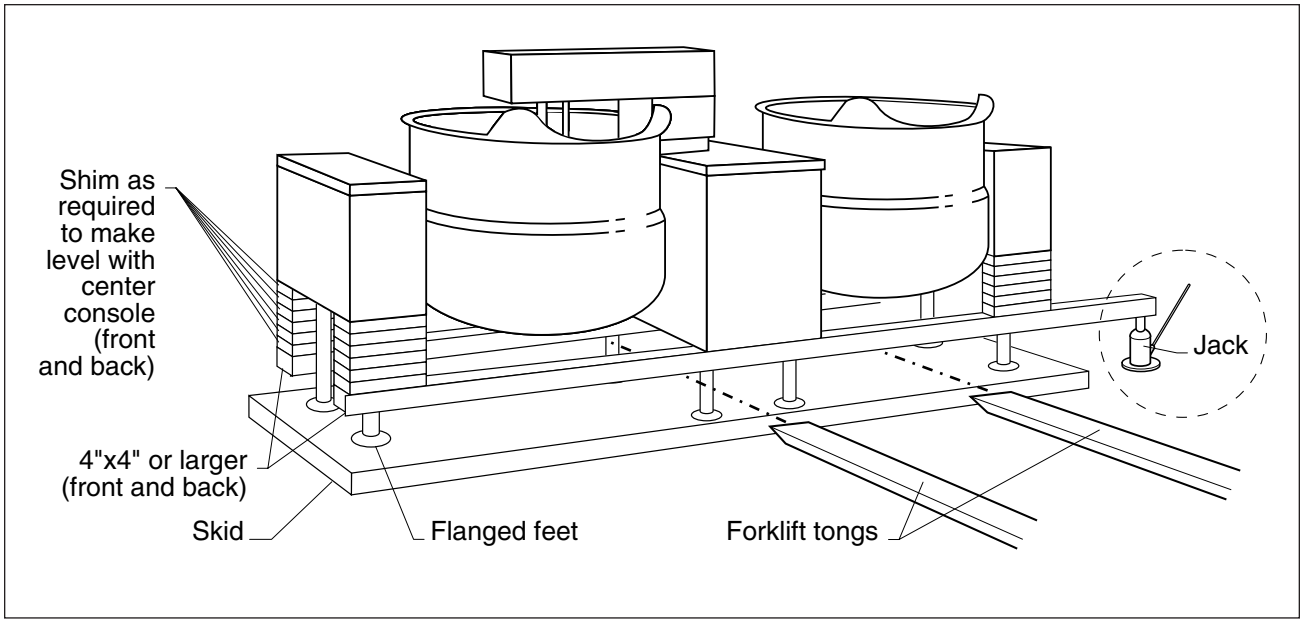

Recommended Installation Procedure

MOVING UNIT

1. While still on skid, move unit as close to final installation position as possible.
2. Prepare unit for lifting as shown in diagram.
3. Lift gently with a forklift or jacks and remove skid.
4. Lower gently to ground and remove forklift and blocking.
5. If unit has to be re-positioned, slide gently. Do not twist or push one side of unit excessively and cause binding on trunnions.

LEVELING

Note: Instructions reflect a more complicated twin mixer kettle - process for single mixer kettles is the same.

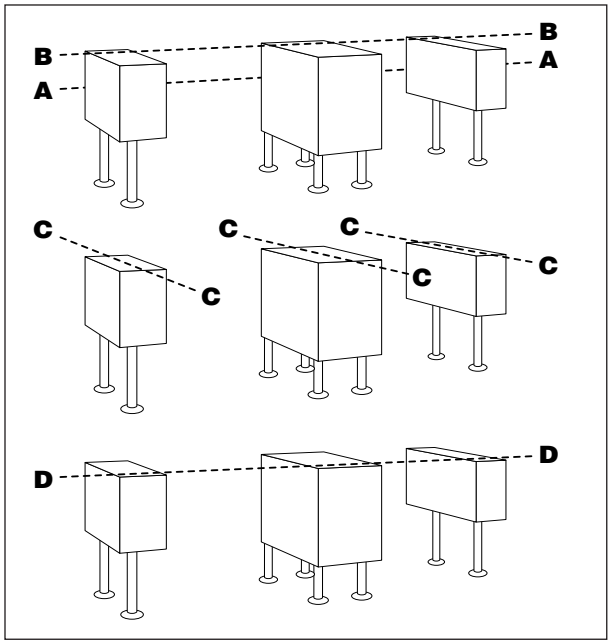

Recommended Leveling Procedure

1. With straight-edge, line the backs of the consoles up with each other (dotted line **A**).
2. Level and straight-edge backs of consoles (dotted line **B**). Adjustments are made by turning flanges on back feet only.
3. Level consoles individually from front to back (dotted lines **C**). Adjustments are made by turning flanges on front feet only.
4. Re-check that the back is level (dotted line **B**) and then the front (dotted line **D**). Adjust if necessary.

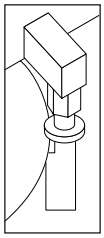

Guide Pins

5. Check that mixer bridge is level and guide pins lock smoothly without binding. If not repeat steps **1** through **4**.

NOTE: See Operating Instructions before operating unit.

6. Make electrical connections (see electrical service connections) and test mixer bridge as follows:

⇒ **A/** Raise mixer bridge.

⇒ **B/** Swing bridge out over centre console.

⇒ **C/** Swing bridge to the left as far as possible.

⇒ **D/** Lower bridge.

⇒ **E/** Bridge pins should enter pin hole on kettle perfectly, If not return to step 1 and repeat leveling steps.

⇒ **F/** Raise bridge and swing to far right (for twin mixers only).

⇒ **G/** Repeat steps **D** and **E** (for twin mixers only).

7. Once positioned and leveled, permanently secure the kettle's flanged feet to the floor using 5/16 inch stainless steel lag bolts and floor anchors (supplied by the installer). Secure each of the flanged feet with one bolt in each hole.

8. Connect piping as described in the "PIPING CONNECTION" section.

ELECTRICAL SERVICE CONNECTIONS

Install in accordance with local codes and/or the National Electric Code ANSI/NFPA No 70-1981 (USA) or the Canadian Electric Code CSA Standard C22.1 (Canada). A separate fused disconnect switch must be supplied and installed. The kettle must be electrically grounded by the installer.

The electric supply must match the power requirements specified on the kettle's rating plate. The copper wiring must be adequate to carry the required current at the rated voltage. Refer to the specification sheet for electrical specifications.

1. Ensure main power is turned off before connecting wires.

2. Remove the screws at the rear of the center console cover, and remove the cover. A wiring diagram is affixed to the underside of the console cover.

3. Feed permanent copper wiring 18" through the cut-out in the bottom of the console. Connect wiring in junction box in the bottom of the console.

4. Turn main power back on.

5. Check for correct rotation of electric motor (access by removing top front cover on center console). If rotation is incorrect, disconnect main power and reverse any two of the three live lines.

6. Replace the console cover and secure it with screws.

COMPRESSED AIR CONNECTION

Mixer Kettles with an air activated discharge valve require a minimum of 90 PSI to operate correctly.

If the unit is also supplying air to a Metering Filling Station then a pressure of 100 PSI at a minimum volume of 25 CFM is required.

The air supplied to the mixer should be clean and dry. No oil should be added to the supply air. We recommend the compressed air system be equipped with a drier, filter, and automatic water dump on the air compressor receiver tank. If the distance between the tank and the unit is less than 100 feet then a minimum line size of 3/4" is required. A distance of 100 to 300 feet requires a minimum 1" line.

PIPING CONNECTIONS

1. All plumbing to and from the kettle should be thoroughly cleaned and inspected for dirt and debris before the final connections to the kettle are made.

2. Connect all piping according to identification tags on unit.

3. Piping between boiler and kettle should be sloped and a drip condensate trap installed at lowest point.

4. Insulating steam piping is recommended for safety and higher efficiency.

5. To determine the correct steam supply pipe size:

⇒ **A/** Find the total steam requirement using the first chart.

⇒ **B/** Use the steam requirement total in the second chart to find the correct pipe size.

PIPING SCHEMATIC

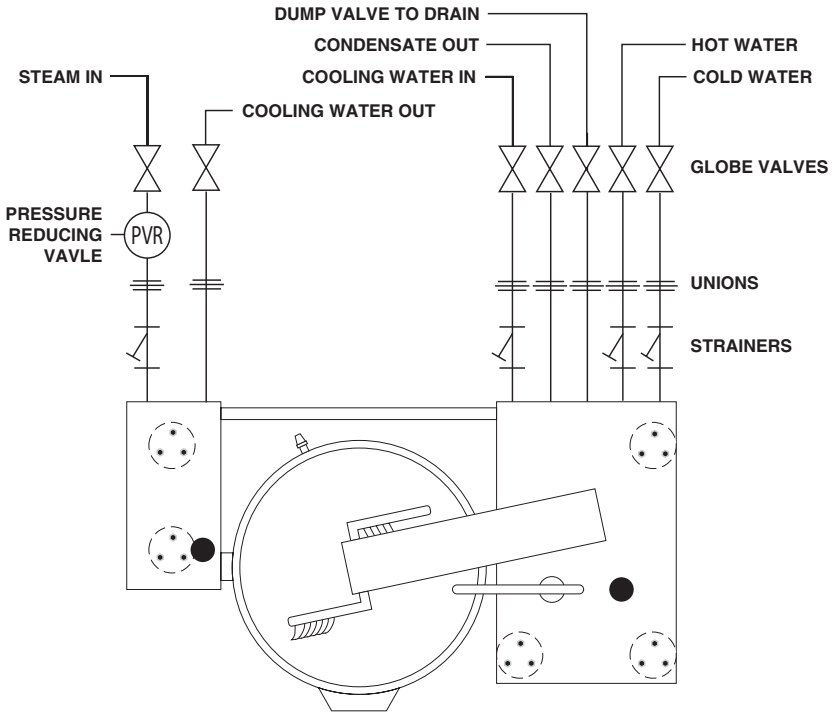

STEAM REQUIREMENTS FOR KETTLES

Kettle Cap. U.S. Gal.	Kettle Dia.	25 psi Steam 265°F Lbs./Hr.	25 psi Steam 265°F Hp./Hr.	40 psi Steam 287°F Lbs./Hr.	40 psi Steam 287°F Hp./Hr.	80 psi Steam 302°F Lbs./Hr.	80 psi Steam 302°F Hp./Hr.
40	26"	100	3	120	4	150	4.5
60	29.5"	150	4.5	190	5.5	230	7.0
80	33"	210	6.0	260	7.5	300	9.0
100	36"	260	7.5	320	9.5	390	11.0
125	40"	320	9.5	400	11.5	470	14.0
150	40"	390	11.0	480	14.0	570	17.0

- Steam requirements are maximum per hour.
- If more than one unit is on the same line then add the steam usage for each one to reach a total.

STEAM PIPE SIZING

Required pipe length in feet/meters

Steam Required Lbs./Kg. per hour	200 Ft. 60 Meters	400 Ft. 125 Meters	600 Ft. 185 Meters
100/45 Kg.	3/4"	1"	1 1/4"
200/91 Kg.	1"	1 1/4"	1 1/2"
300/136 Kg.	1"	1 1/4"	1 1/2"
400/182 Kg.	1"	1 1/2"	1 3/4"
500/227 Kg.	1 1/4"	1 1/2"	1 3/4"
700/318 Kg.	1 1/2"	1 3/4"	2"
900/409 Kg.	1 1/2"	1 3/4"	2"

NOTES:

- Pipe size in inches.
- Less than 50 PSI (3.4 BAR) pressure, increase pipe size by 1/4".
- 80 to 100 PSI (5.5 to 6.8 BAR), Decrease pipe size by 1/4".

QUALITY ASSURANCE CHECKLIST

Follow this list only after all other installation steps are completed. Some steps require the use of equipment. Follow operating instructions.

The following will be performed before the unit is connected to utilities:

1.	Visual	Examine unit for scratches, dents, or other defects.
2.	Visual	Check flanged feet all have bolts holding them.
3.	General	Check all accessible wiring, mechanical and plumbing connections by hand for secure, tight and satisfactory assembly. Remove all paper.
4.	Level	Check unit has been leveled and squared correctly.

The following will be performed with the unit connected to utilities:

5.	Raise Bridge	If bridge does not raise then check motor rotation. Bridge should not raise until speed control is turned to minimum and then adjusted back up.
6.	Swing Bridge	Bridge when fully raised should swing without hitting any object, i.e. control housing, kettle lip. Check that hydraulic hoses are not being pinched by stops on swivel assembly.
7.	Tilt Kettle	Kettle tilts smoothly both down and back up. If power tilt, check that micro switches are adjusted properly (kettle is level in upright position and drains fully when tilted) and are not being crushed by gear.
8.	Lower Bridge	Raise bridge. Switch to mix. Turn speed control to zero to reset micro switch then set speed control to number four. Check that unit does not begin to mix until bridge has lowered part way into the kettle. Check that mixer bridge pin lowers into pin hole correctly
9.	Speed Control - Main	Main agitator arm not rotating when set at minimum but will start to move slowly on one. Speed control makes positive contact with micro switch.
10.	Speed Control - Secondary	Set main speed control to five. Adjust secondary control from minimum to maximum. Look for considerable speed variance.
11.	Water Faucets	Turn on hot water faucet. Turn off and check for leaks in piping and drips from faucet spout. Repeat above with cold water faucet.
12.	Product Discharge Valve	Add water to kettle. Check for leaks from valve. Open and close valve a few times and check for leaks again.

OPTIONAL CONTROLS

Some units may not have the following items to test

13. Meter

Complete this test using markings on mixer arm or a measuring strip if there are no markings on the unit. Test the meter at the following values up to capacity (Should be approx. ±1/4"). During this test check that the (interrupt) switch stops the water flow and the (continue/reset) when switched to "continue" resumes the flow without resetting the meter.

GALLONS	LITERS
5	20
20	80
40	160
80	320
100	400

When the (continue/reset) switch is turned to "reset" the displayed quantity on the meter should be erased and the count begins at zero.

For the following test fill the kettle 3/4 full of water. Have the mixer rotating with the speed control setting at three to five.

14. Heating Manual

(Active/Bypass) switch in "Bypass" position. (Heat/Off/Cool) switch in "Heat" position. Open manual steam valve, steam enters kettle and condensate escapes from steam trap.

For units equipped with water cooling -
1./ Automatic drain opens and discharges water from jacket,
2./ Automatic drain closes when steam starts exiting,
3./ Condensate drain opens and discharges hot water.

Close manual steam valve and you should hear steam entering kettle slow to a stop.

15. Cooling Manual

Turn (Heat/Off/Cool) switch to "Off". Open manual steam valve. Turn (Heat/Off/Cool) switch to "Cool". Cooling water enters kettle from large console and exits from side console.

16. Heating Automatic

(Heat/Off/Cool) switch in "Off" position. Open manual steam valve. Follow operating instructions on label to set the temperature to 180°F/ 90°C. Turn (Active/Bypass) switch to "Active", you should hear steam entering kettle and condensate should escape steam trap.

For units equipped with water cooling -
1./ Automatic drain opens and discharges water from jacket,
2./ Automatic drain closes when steam starts exiting,
3./ Condensate drain opens and discharges hot water.

17 Chart Recorder

a) Seal chart recorder on the inside all around to the panel with silicone.
b) Seal pipe penetration where cables enters panel from console with silicone all around.

OPERATING INSTRUCTIONS

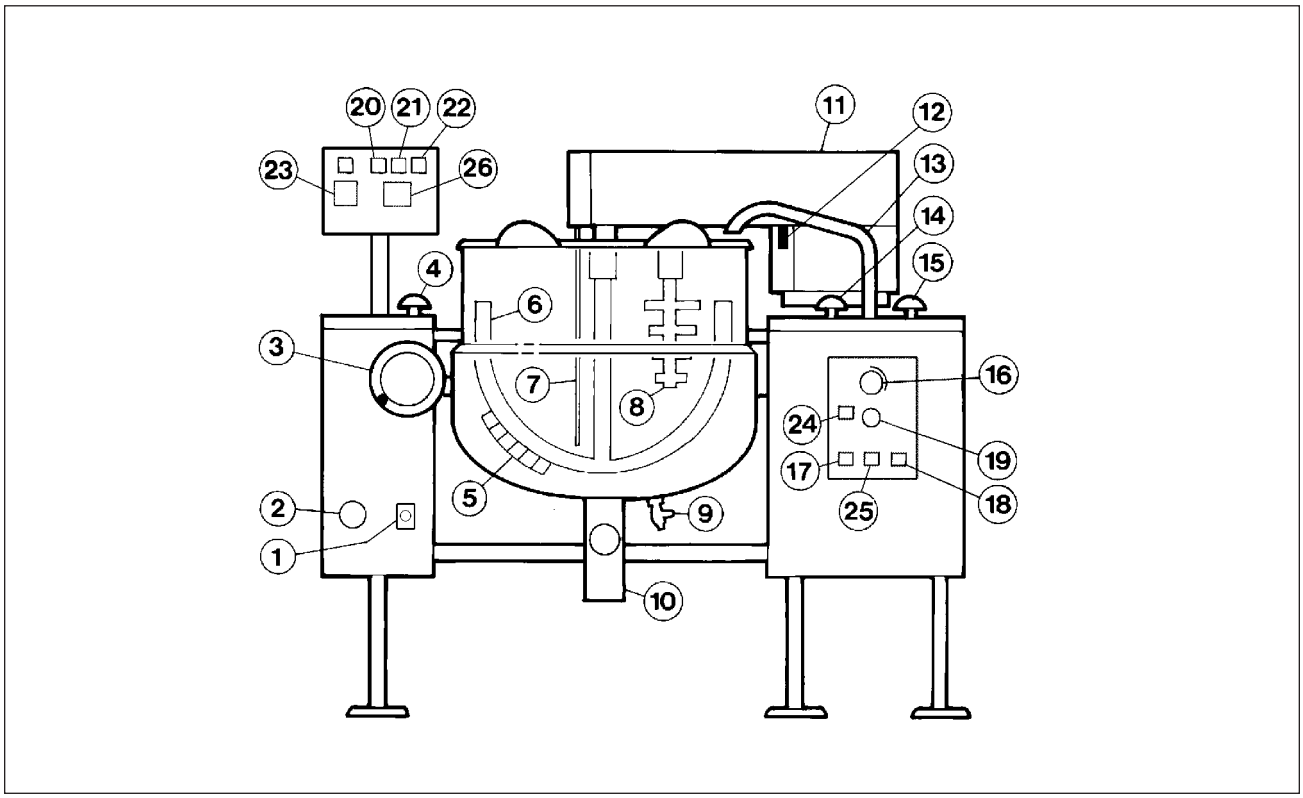

Operating Controls & Indicators for Standard Direct Steam Mixer Kettles

ITEM NO.	***DESCRIPTION FUNCTION***
1.	Air Quick Connect . . . . . .Connection for air to food pump.
2.	Air Regulator . . . . . .Opens and closes air operated product discharge valve (Item 10).
3.	Hand Wheel . . . . . .Tilts kettle for pouring. May be replaced by tilt switch if unit is power tilt.
4.	Steam Valve . . . . . .Manually controls the amount of steam entering the kettle.
5.	Scraper Blades . . . . . .Scrapes the side of the kettle and moves product away.
6.	Main Agitator Arm . . . . . .Provides most of the product movement.
7.	Temperature Probe . . . . . .Probe holds temperature sensors for controller.
8.	Secondary Arm . . . . . .Provides reverse agitation and product lift in kettle.
9.	Drain Cock . . . . . .Used to manually drain condensate from kettle.
10.	Product Discharge Valve . . . .Discharge valve for product in the kettle.
11.	Mixer Bridge . . . . . .Encloses agitator motors.
12.	Secondary Speed Control . . .Controls speed of secondary agitator arm.
13.	Faucet Spout . . . . . .Delivers water to the kettle.
14.	Hot Water Valve . . . . . .Turns on hot water.
15.	Cold Water Valve . . . . . .Turns on cold water.
16.	Mixer Speed Control . . . . . .Controls speed of agitators and mixer bridge lift mode.
17.	Mix/Lift Switch . . . . . .Sets hydraulics to mix or lift mode.
18.	Up/Down Switch . . . . . .When unit is in lift mode, bridge can be raised or lowered with this switch.
19.	Emergency Stop . . . . . .Stops hydraulic system.
20.	On/Off Switch . . . . . .Power switch to water meter.
21.	Start Switch . . . . . .Starts water flow to kettle.
22.	Interrupt Switch . . . . . .Interrupts flow without resetting water meter.
23.	Active/Bypass Switch . . . . . .Switch to activate or bypass (manual operation) the controller.
24.	Controller Switch . . . . . .Dual function switch for auto mode or manual heat, cool or off mode.
25.	Main Power Switch . . . . . .Power switch for unit.
26.	Water Meter Control . . . . . .Display and setting for water meter.

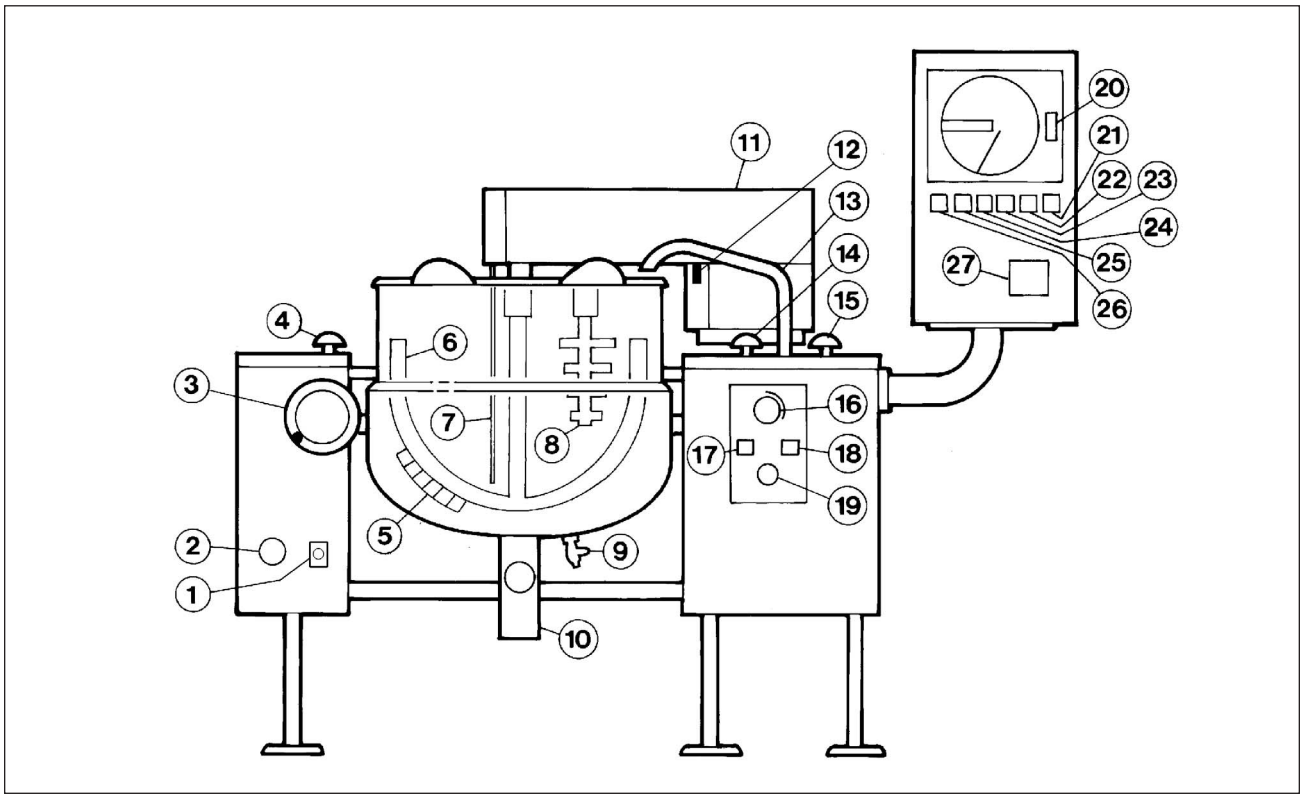

Operating Controls & Indicators for Cook Chill Direct Steam Mixer Kettles

ITEM NO.	***DESCRIPTION FUNCTION***
1.	Air Quick Connect . . . . . .Connection for air to food pump.
2.	Air Regulator . . . . . .Opens and closes air operated product discharge valve (Item 10).
3.	Hand Wheel . . . . . .Tilts kettle for pouring. May be replaced by tilt switch if unit is power tilt.
4.	Steam Valve . . . . . .Manually controls the amount of steam entering the kettle.
5.	Scraper Blades . . . . . .Scrapes the side of the kettle and moves product away.
6.	Main Agitator Arm . . . . . .Provides most of the product movement.
7.	Temperature Probe . . . . . .Probe holds temperature sensors for controller.
8.	Secondary Arm . . . . . .Provides reverse agitation and product lift in kettle.
9.	Drain Cock . . . . . .Used to manually drain condensate from kettle.
10.	Product Discharge Valve . . . .Discharge valve for product in the kettle.
11.	Mixer Bridge . . . . . .Encloses agitator motors.
12.	Secondary Speed Control . . .Controls speed of secondary agitator arm.
13.	Faucet Spout . . . . . .Delivers water to the kettle.
14.	Hot Water Valve . . . . . .Turns on hot water.
15.	Cold Water Valve . . . . . .Turns on cold water.
16.	Mixer Speed Control . . . . . .Controls speed of agitators and mixer bridge lift mode.
17.	Mix/Lift Switch . . . . . .Sets hydraulics to mix or lift mode.
18.	Up/Down Switch . . . . . .When unit is in lift mode, bridge can be raised or lowered with this switch.
19.	Emergency Stop . . . . . .Stops hydraulic system.
20.	Controller Keypad . . . . . .Used to set temperature parameters.
21.	On/Off Switch . . . . . .Power switch to water meter.
22.	Start Switch . . . . . .Starts water flow to kettle.
23.	Interrupt Switch . . . . . .Interrupts flow without resetting water meter.
24.	Active/Bypass Switch . . . . . .Switch to activate or bypass (manual operation) the controller.
25.	Controller Switch . . . . . .Dual function switch for auto mode or manual heat, cool or off mode.
26.	Main Power Switch . . . . . .Power switch for unit.
27.	Water Meter Control . . . . . .Display and setting for water meter.

Operating Suggestions

Cleveland Range Mixer Kettles are simple and safe to operate. The following tips will allow you to maximize the use of your new mixer.

1. To achieve optimum performance on tilting kettles;

   Before applying steam to a cold kettle, open the DRAIN COCK to drain condensate from the kettles jacket. Close drain cock when unit is fully drained.
2. Allow unit to preheat before addition of product to kettle. However when cooking egg and milk products, the kettle should NOT be preheated, as products of this nature adhere to hot cooking surfaces. These types of foods should be placed in the kettle before heating is begun.
3. An important part of kettle cleaning is to prevent foods from drying on. For this reason, cleaning should be completed immediately after cooked foods are removed. Refer to the "Care and Cleaning" instructions for detailed kettle washing procedures.
4. If a mixer bridge is equipped with a temperature probe for a controller or thermometer, the probe must be submerged a minimum of three inches in the product for accurate readings.

Safety

1. Close PRODUCT DISCHARGE VALVE before filling the kettle.
2. When raising or lowering MIXER BRIDGE, insure FAUCET SPOUT is not in the way of MAIN AGITATOR ARM or damage to spout will result.
3. As a safety precaution the MIXER SPEED CONTROL must first be turned to zero before unit will start to mix.
4. Always remember, like a cooking pot the kettles become very hot when cooking. Avoid contact with bare skin.

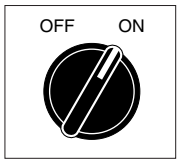

General Operation

1. Turn MAIN POWER SWITCH to "ON".

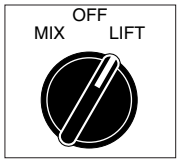

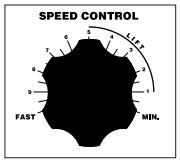

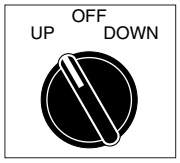

Lifting & Lowering Bridge

WARNING- Insure FAUCET SPOUT is out of way before raising or lowering bridge.

1. Turn MIX/LIFT SWITCH to "LIFT".
2. Turn MIXER SPEED CONTROL to "MIN" and back up to #5.
3. Turn and hold UP/DOWN SWITCH "UP" to raise or "DOWN" to lower.

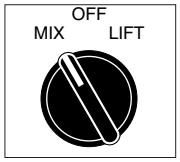

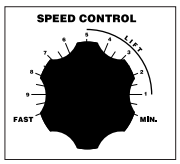

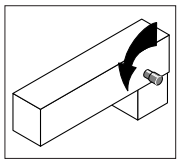

Mixing

1. Turn MIX/LIFT SWITCH to "MIX".
2. Turn MIXER SPEED CONTROL to "MIN" and slowly adjust to desired speed.
3. Adjust SECONDARY SPEED CONTROL to desired speed.

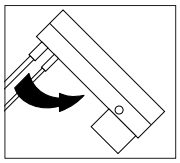

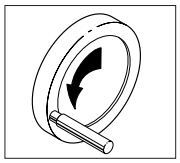

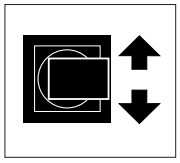

Tilting Kettle

1. Raise MIXER BRIDGE and swing to side.
2. For ***manual tilt:*** turn HANDWHEEL.
3. For ***power tilt:*** turn switch "⬆" to raise, or "⬇" to tilt.

WARNING- Do not tilt kettle when mixer agitators are in kettle bowl.

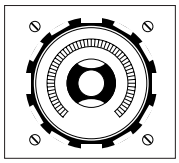

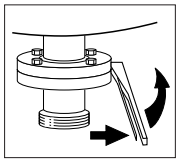

Discharge Valve

1. For ***air valve:*** turn AIR REGULATOR clockwise to open, or counterclockwise to close.
2. For ***butterfly valve:*** push handle in and pull upwards to open.

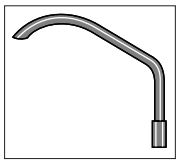

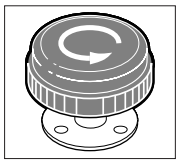

Adding Water Manually

1. Locate FAUCET SPOUT over desired kettle.
2. Turn on HOT or COLD WATER VALVES.

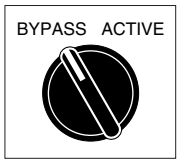

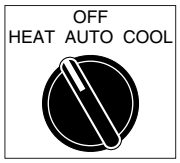

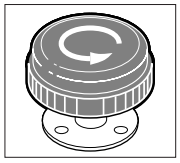

Manual Heating/ Cooling

1. Turn ACTIVE/BYPASS SWITCH to "BYPASS".
2. Turn CONTROLLER SWITCH to "HEAT" or "COOL".
3. ***For heat:*** open STEAM VALVE completely to boil, or adjust to regulate temperature.

   For cooling: open STEAM VALVE completely.

DIGITAL WATER METER OPERATING INSTRUCTIONS

Note: The digital counter has been preset at the factory and should operate satisfactory. If installing a new counter (or the configuration settings to your existing digital counter become corrupted) you must configure the digital counter as shown below (***Configuring a Digital Counter***) prior to operation.

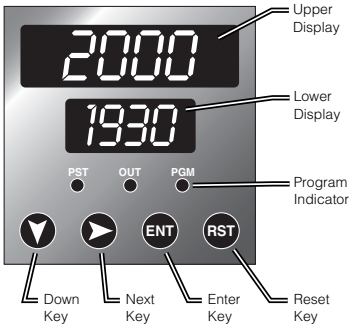

1 Turn POWER switch "ON".

2 Set required volume by first pushing the ▶ key until the digit you want to change is flashing in the lower display. Then use the ▼ key to change the value of the selected digit.

When all digits are set, press the **ENT** key.

3 Locate delivery spout over desired kettle.

4 Turn START switch to "RESET". Delivery will start at "0" and stop at preset volume.

5 To stop delivery at any time, turn INTERRUPT switch to " ● ".

6 To complete delivery after interrupting, turn START switch to "CONTINUE"

7 Turn POWER switch to "OFF" when meter is not in use.

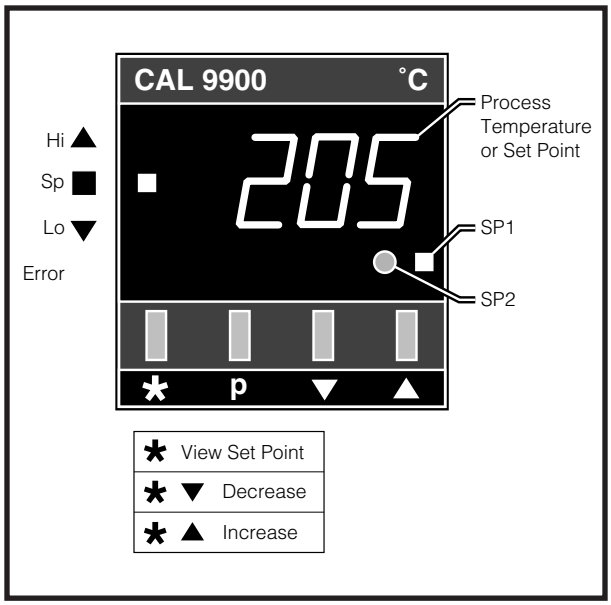

CAL 9900 Controls Drawing

MIXER KETTLE OPERATION USING CAL 9900

Note: Temperature probe on mixer bridge must be covered with a minimum of three inches of product to function correctly.

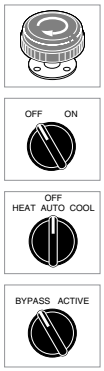

1. Open STEAM VALVE completely
2. Turn mixer MAIN POWER switch to "ON" (CAL 9900 lights up and displays present temperatures).
3. Turn HEAT/COOL switch to “OFF/AUTO".
4. Turn ACTIVE/BYPASS switch to "BYPASS". The unit should not be heating or cooling at this point.
5. Push (✱) button on CAL 9900 to read set point temperature. (This is the desired product temperature).
6. To change set point temperature push and hold (✱) button while pushing (▲) or (▼) button. New set point is determined when (✱) button is released.
7. Add product to kettle.

8. Turn ACTIVE/BYPASS switch to “ACTIVE”. If the set point temperature is higher than the product temperature, the kettle will start heating.

Note: For twin kettles, the CAL 9900 will control the kettle the mixer is in.

Changing Functions & Options

The controller has been preset at the factory and should operate satisfactory. If you wish to fine tune the unit for your specific application consult the CAL 990O Installation and Operation Manual. Following is a simplified procedure for changing parameters.

1. Mixer MAIN POWER switch in the "ON" position.

2. ACTIVE/BYPASS switch in "BYPASS" position.
3. Press button labeled (**p**). The display should show a number with a decimal place in it.

   Left of the decimal place is the **OPERATING MODE** setting (this number should be flashing).

   To the right is the **FUNCTION NUMBER**.

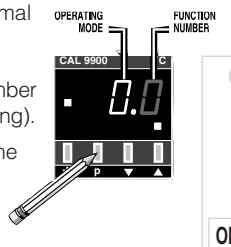

4. To change the **OPERATING MODE** setting push the (▲) or (▼) buttons.

5. To move to the **FUNCTION NUMBER** (right of the decimal) push (✱) button.

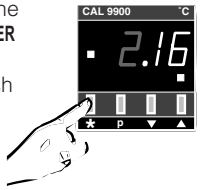

6. That number should now be flashing. To move to another **FUNCTION NUMBER** push the (▲) or (▼) buttons.

7. Push (✱) button to move to the left of the decimal. To change the **OPERATING MODE** setting push the (▲) or (▼) buttons.

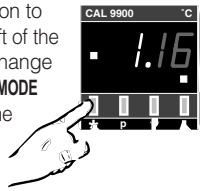

8. When your changes are complete push the button labeled (**p**) again to return to the Process Temperature.

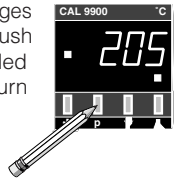

Cleveland Range Factory Settings

OPERATING MODE	FUNCTION NUMBER
0	**0**
0	**1**
5	**2**
0	**3**
4 steam 5 electric	**4**
0	**5**
5	**6**
0	**7**
0	**8**
1	**9**
0	**10**
0	**11**
0	**12**
0	**13**
0	**14**
0	**15**
9	**16**
0	**17**
0	**18**
1	**19**
2 T.A.P 0	**20**
0	**21**
0 = °C 1 = °F	**22**
6	**23**
-- --	**24**
0	**25**
-- --	**26**

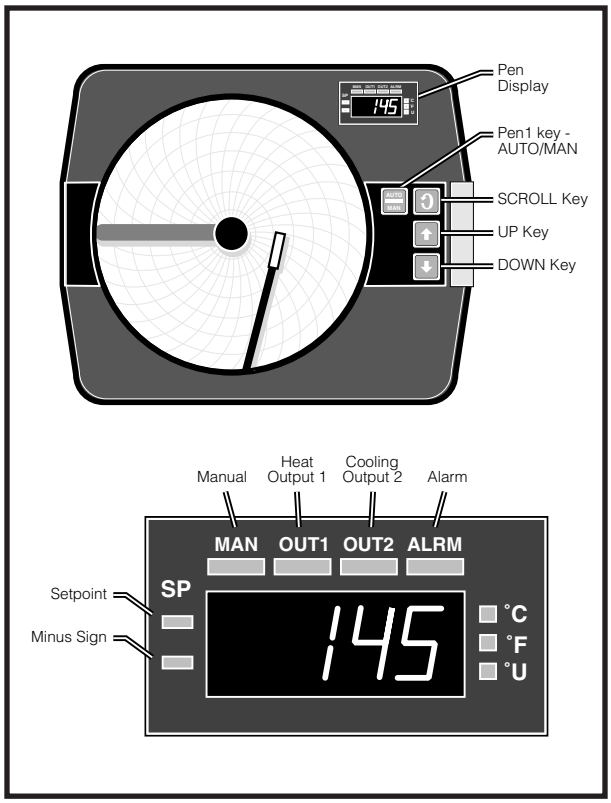

MRC 7000 Controls Drawing (1 pen)

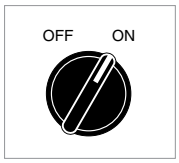

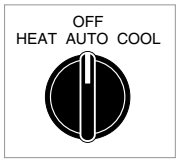

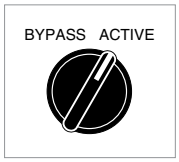

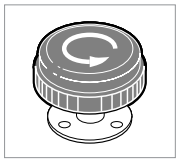

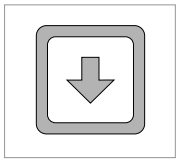

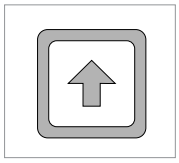

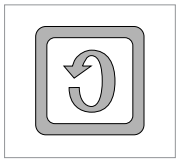

MIXER KETTLE OPERATION USING MRC 7000 (1 PEN)

Note: Temperature probe on mixer bridge must be covered with a minimum of three inches of product to function correctly.

1. Turn MAIN POWER switch to "ON".
2. Turn HEAT/COOL switch to "OFF/AUTO".
3. Turn ACTIVE/BYPASS switch to "ACTIVE".
4. Open steam valve completely.
5. On controller keypad push and hold key "⇓" or "⇑" until desired temperature is set.
6. To ***start***: push scroll key "↻" until "*CtrL*" is displayed.
7. Push down key "⇓".
8. To ***stop***: push scroll key "↻" until "*OFF*" is displayed.
9. Push down key "⇓".

NOTE: For twin kettles, the MRC 7000 will control the kettle the mixer is in.

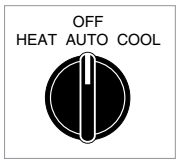

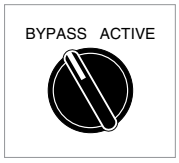

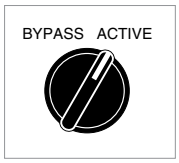

If the unit is used continually it may be simpler to control the "*ON/OFF*" function with the following steps:

1. Keep HEAT/COOL switch at "OFF/AUTO".
2. To stop turn ACTIVE/BYPASS switch to "BYPASS".
3. To change temperature setting push and hold key "⇓" or "⇑" until desired temperature is set.
4. To start, turn ACTIVE/BYPASS switch to "ACTIVE".

CLEANING INSTRUCTIONS

CARE AND CLEANING

Cooking equipment must be cleaned regularly to maintain its fast, efficient cooking performance and to ensure its continued safe, reliable operation. The best time to clean is shortly after each use (allow unit to cool to a safe temperature).

WARNINGS

➪ 

Chloride Cleaners

Do not use detergents or cleansers that are chloride based or contain quaternary salt.

➪ 
Wire Brush &

Do not use a metal bristle brush or scraper.

➪ 
Steel Pads

Steel wool should never be used for cleaning the stainless steel.

➪ 
High Pressure Spray Hose

Unit should never be cleaned with a high pressure spray hose.

➪ 
Stagnant Water

Do not leave water sitting in unit when not in use.

CLEANING INSTRUCTIONS

1. Turn unit off.

2. Remove drain screen (if applicable). Thoroughly wash and rinse the screen either in a sink or a dishwasher.

3. Prepare a warm water and mild detergent solution in the unit.

4. Remove food soil using a nylon brush.

5. Loosen food which is stuck by allowing it to soak at a low temperature setting.

6. Drain unit.

7. Rinse interior thoroughly.

8. If the unit is equipped with a Tangent Draw-Off Valve, clean as follows:

- **a)** Disassemble the draw-off valve first by turning the valve knob counter-clockwise, then turning the large hex nut counter-clockwise until the valve stem is free of the valve body.
- **b)** In a sink, wash and rinse the inside of the valve body using a nylon brush.
- **c)** Use a nylon brush to clean tangent draw-off tube.
- **d)** Rinse with fresh water.
- **e)** Reassemble the draw-off valve by reversing the procedure for disassembly. The valve's hex nut should be hand tight only.

9. If the unit is equipped with a Butterfly Valve, clean as follows:

- **a)** Place valve in open position.
- **b)** Wash using a warm water and mild detergent solution.
- **c)** Remove food deposits using a nylon brush.
- **d)** Rinse with fresh water.
- **e)** Leave valve open when unit is not in use.

10. Using mild soapy water and a damp sponge, wash the exterior, rinse, and dry.

NOTES

➪ For more difficult cleaning applications one of the following can be used: alcohol, baking soda, vinegar, or a solution of ammonia in water.

➪ Leave the cover off when the kettle is not in use.

➪ For more detailed instructions refer to the Nafem Stainless Steel Equipment Care and Cleaning manual (supplied with unit).

SCRAPER BLADES

1. Remove retaining ring and slide scraper blades off agitator arm.
2. Place parts in a pan of warm water to soak.
3. Clean in a sink, using a warm water and mild detergent solution.
4. Rinse with fresh water.
5. Allow to dry thoroughly on a flat, clean surface.

PRODUCT VALVE

Daily *- clean product valve as follows:*

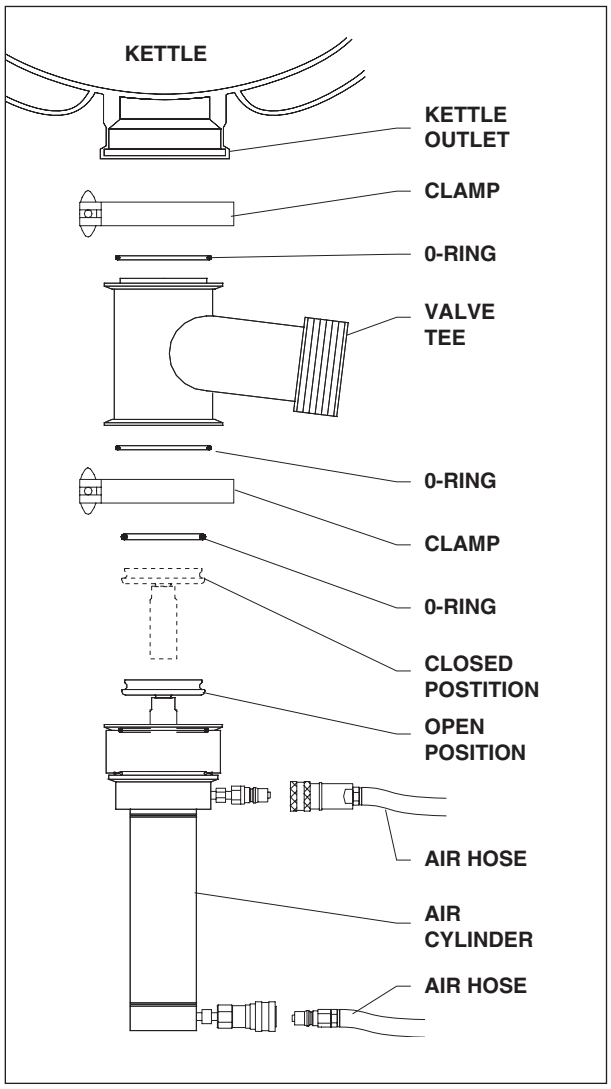

1. Open product valve.
2. Disconnect air hoses.
3. Remove air cylinder.
4. Remove valve tee.
5. Remove all O-rings.
6. Clean air cylinder, do not submerge in water. Wipe clean and sanitize.
7. Clean and sanitize tee and O-rings.
8. Grease and reinstall O-rings.
9. Reinstall tee to kettle outlet.
10. Reinstall air cylinder to bottom of tee.
11. Reconnect air hoses.
12. Close valve and check for alignment.

STAINLESS STEEL EQUIPMENT CARE AND CLEANING

(Suppied courtesy of Nafem. For more information visit their web site at www.nafem.org)

Contrary to popular belief, stainless steels ARE susceptible to rusting.

Corrosion on metals is everywhere. It is recognized quickly on iron and steel as unsightly yellow/orange rust. Such metals are called "active" because they actively corrode in a natural environment when their atoms combine with oxygen to form rust.

Stainless steels are passive metals because they contain other metals, like chromium, nickel and manganese that stabilize the atoms. 400 series stainless steels are called ferritic, contain chromium, and are magnetic; 300 series stainless steels are called austenitic, contain chromium and nickel; and 200 series stainless, also austenitic, contains manganese, nitrogen and carbon. Austenitic types of stainless are not magnetic, and generally provide greater resistance to corrosion than ferritic types.

With 12-30 percent chromium, an invisible passive film covers the steel's surface acting as a shield against corrosion. As long as the film is intact and not broken or contaminated, the metal is passive and stain-less. If the passive film of stainless steel has been broken, equipment starts to corrode. At its end, it rusts.

Enemies of Stainless Steel

There are three basic things which can break down stainless steel's passivity layer and allow corrosion to occur.

1. Mechanical abrasion
2. Deposits and water
3. Chlorides

Mechanical abrasion means those things that will scratch a steel surface. Steel pads, wire brushes and scrapers are prime examples.

Water comes out of the faucet in varying degrees of hardness. Depending on what part of the country you live in, you may have hard or soft water. Hard water may leave spots, and when heated leave deposits behind that if left to sit, will break down the passive layer and rust stainless steel. Other deposits from food preparation and service must be properly removed.

Chlorides are found nearly everywhere. They are in water, food and table salt. One of the worst chloride perpetrators can come from household and industrial cleaners.

So what does all this mean? Don't Despair!

Here are a few steps that can help prevent stainless steel rust.

1. *Use the proper tools.*

   When cleaning stainless steel products, use non-abrasive tools. Soft cloths and plastic scouring pads will not harm steel's passive layer. Stainless steel pads also can be used but the scrubbing motion must be in the direction of the manufacturers' polishing marks.

2. *Clean with the polish lines.*

   Some stainless steel comes with visible polishing lines or "grain." When visible lines are present, always scrub in a motion parallel to the lines. When the grain cannot be seen, play it safe and use a soft cloth or plastic scouring pad.

3. *Use alkaline, alkaline chlorinated or non-chloride containing cleaners.*

   While many traditional cleaners are loaded with chlorides, the industry is providing an ever-increasing choice of non-chloride cleaners. If you are not sure of chloride content in the cleaner used, contact your cleaner supplier. If your present cleaner contains chlorides, ask your supplier if they have an alternative. Avoid cleaners containing quaternary salts; it also can attack stainless steel and cause pitting and rusting.

4. *Treat your water.*

   Though this is not always practical, softening hard water can do much to reduce deposits. There are certain filters that can be installed to remove distasteful and corrosive elements. To insure proper water treatment, call a treatment specialist.

5. *Keep your food equipment clean.*

   Use alkaline, alkaline chlorinated or non-chloride cleaners at recommended strength. Clean frequently to avoid build-up of hard, stubborn stains. If you boil water in stainless steel equipment, remember the single most likely cause of damage is chlorides in the water. Heating cleaners that contain chlorides have a similar effect.

6. *Rinse, rinse, rinse.*

   If chlorinated cleaners are used, rinse and wipe equipment and supplies dry immediately. The sooner you wipe off standing water, especially when it contains cleaning agents, the better. After wiping equipment down, allow it to air dry; oxygen helps maintain the stainless steel's passivity film.

7. *Never use hydrochloric acid (muriatic acid) on stainless steel.*
8. *Regularly restore/passivate stainless steel.*

Recommended cleaners for specific situations

Job	Cleaning Agent	Comments
Routine cleaning	Soap, ammonia, detergent, Medallion	Apply with cloth or sponge
Fingerprints & smears	Arcal 20, Lac-O-Nu Ecoshine	Provides barrier film
Stubborn stains & discoloration	Cameo, Talc, Zud, First Impression	Rub in direction of polish lines
Grease & fatty acids, blood, burnt-on-foods	Easy-off, De-Grease It Oven Aid	Excellent removal on all finishes
Grease & oil	Any good commercial detergent	Apply with sponge or cloth
Restoration/Passivation	Benefit, Super Sheen	

Review

1. Stainless steels rust when passivity (film-shield) breaks down as a result of scrapes, scratches, deposits and chlorides.
2. Stainless steel rust starts with pits and cracks.
3. Use the proper tools. Do not use steel pads, wire brushes or scrapers to clean stainless steel.
4. Use non-chlorinated cleaners at recommended concentrations. Use only chloride- free cleaners.
5. Soften your water. Use filters and softeners whenever possible.
6. Wipe off cleaning agent(s) and standing water as soon as possible. Prolonged contact causes eventual problems.

To learn more about chloride-stress corrosion and how to prevent it, contact the equipment manufacturer or cleaning materials supplier.

Developed by Packer Engineering, Naperville, Ill., an independent testing laboratory.

SERVICE PARTS

WARRANTY

Our Company supports a worldwide network of Maintenance and Repair Centers. Contact your nearest Maintenance and Repair Centre for replacement parts, service, or information regarding the proper maintenance and repair of your cooking equipment

In order to preserve the various agency safety certification (UL, NSF, ASME/Ntl. Bd., etc.), only factory-supplied replacement parts should be used. The use of other than factory supplied replacement parts will void warranty.

HYDRAULIC COMPONENTS

Scraper Blades:

KETTLE SIZE GALLONS	QUANTITY
40	22
60	26
80	30
100	34
125	38
150	38

Cooling Fan:

Fan KE54860
Fan Cover . . . KE601236
Fan Guard . . . KE54861

NOTE: For Hydraulic Hoses order Part No. RT00505 and specify length required

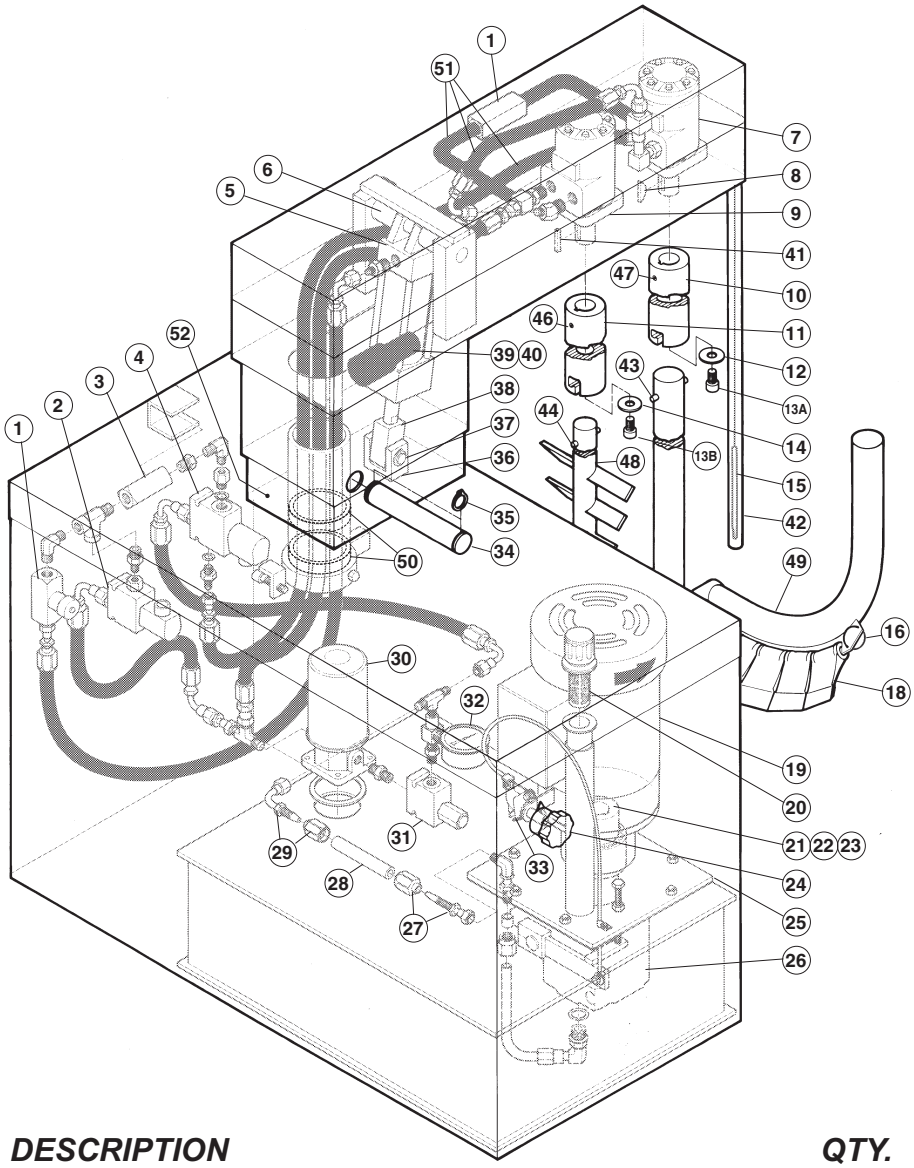

ITEM NO.	PART NO.	DESCRIPTION	QTY.
1.	KE51607	Flow Control Valve	2
2.	KE54834-10	Solenoid Valve, 2 Way, 120 Volt	1
	SE50224	Coil Only 120 Volt	1
3.	KE51608	Check Valve	1
4.	KE54834-11	Solenoid Valve, 3 Way, 120 Volt	1
	SE50224	Coil Only 120 Volt	1
5.	KE51848	Jack	1
	SE50241	Rod Gland Seal Kit	1
	SE50242	Piston Seal Kit.	1
6.	KE52124	Jack Upper Pin	1
7.	KE51846	Hydraulic Motor, Scraper Arm, 40 gal.	1
	KE51938	Hydraulic Motor, Scraper Arm, 60-150 gal.	
	KE53004	Hydraulic Motor, Scraper Arm, 200-250 gal.	
8.	FA95006	Woodruff Key	1
9.	KE51845	Hydraulic Motor, Secondary Agitator, 40-150 gal.	1
	KE53005	Hydraulic Motor, Secondary Agitator, 200-250 gal.	
10.	KE51715	Main Coupling, Scraper Arm	1
11.	KE51716	Secondary Coupling, Agitator Arm	1
12.	KE52114	Coupling Washer, Primary S.S.	1
13A.	FA11286	Socket Head Screw, 1/4 X 20	2
13B.	FA11346	Socket Head Screw, 5/16 X 20	2
14.	KE52115	Coupling Washer, Secondary S. S.	1
15.	CT50097	R.T.D Probe Single	1
16.	KE53962	Blade Stop Ring	2

18.	KE51834	Scraper Blades	as required
19.	KE51875-3	Electric Motor, 3 hp., 208-230/460V	1
	KE51875-4	Electric Motor, 3 hp., 220/380/440V	1
	KE51875-5	Electric Motor, 3 hp., 575V	1
20.	KE51889	Filter, Tank Breather	1
21.	KE52222	Gear, 3/4" I.D. Pump, prior to 1995	1
21.	KE52222-1	Gear, 3/4" I.D. Pump, after 1995	1
22.	KE52223	Gear, 7/8" I.D. Motor	1
23.	KE52224	Nylon Coupling.	1
24.	KE52190	Speed Control Knob	1
25.	KE52171	Gasket, Oil Tank	1
26.	KE51844	Hydraulic Pump	1
27.	FI05060	Swivel adapter	5
28.	SE50280	Hydraulic Hose, Per Foot	40
29.	FI05061	Swivel Elbow. 90 Degrees	9
30.	SE50094	Oil Filler	1
31.	KE51874	Pressure Relief Valve, Hydraulic	1
32.	KE52382	Pressure Gauge	1
33.	KE00860	Speed Control Cable Assembly	1
34.	KE51622	Bridge Tilt Pin	1
35.	FA95022	Retaining Ring	1
36.	KE51623	Clevis Bracket	1
37.	SE50353	Clevis Pin c/w Clips	1
38.	KE51624	Knuckle Joint	1
39.	KE50295	Mounting Bracket, Mercury Switch	1
40.	KE50294	Mercury Switch	1-2
41.	FA95055-3	Woodruff Key	1
42.	T40527	Housing, probe, 40 gal.	1
	T40528	Housing, probe, 60 gal.	1
	T40529	Housing, probe, 80 gal.	1
	T40530	Housing, probe, 100 gal.	1
	T40531	Housing, probe, 125 gal.	1
	T40532	Housing, probe, 150 gal.	1
	T405321	Housing, probe, 200 gal.	1
	T405322	Housing, probe, 250 gal.	1
43.	KE51921	Pin, Scraper Arm	1
44.	KE51925	Pin, Secondary Agitator	1
46.	FA19506	Set Screw, Secondary Agitator	1
47.	FA19507	Set Screw, Scraper Arm	1
48.	KE00935	Secondary Agitator, 40 gal. (includes #44)	1
	KE00936	Secondary Agitator, 60 gal. (includes #44)	1
	KE00937	Secondary Agitator, 80 gal. (includes #44)	1
	KE00938	Secondary Agitator, 100 gal. (includes #44)	1
	KE00939	Secondary Agitator, 125 gal. (includes #44)	1
	KE00940	Secondary Agitator, 150 gal. (includes #44)	1
	KE009401	Secondary Agitator, 200 gal. (includes #44)	1
	KE009402	Secondary Agitator, 250 gal. (includes #44)	1
49.	KE00947	Primary Agitator, 40 gal., with Gallon Markings (includes #16, 18 & 43)	1
	KE00948	Primary Agitator, 60 gal., with Gallon Markings (includes #16, 18 & 43)	1
	KE00949	Primary Agitator, 80 gal., with Gallon Markings (includes #16, 18 & 43)	1
	KE00950	Primary Agitator, 100 gal., with Gallon Markings (includes #16, 18 & 43)	1
	KE00951	Primary Agitator, 125 gal., with Gallon Markings (includes #16, 18 & 43)	1
	KE00952	Primary Agitator, 150 gal., with Gallon Markings (includes #16, 18 & 43)	1
	KE009521	Primary Agitator, 200 gal., with Gallon Markings (includes #16, 18 & 43)	1
	KE009522	Primary Agitator, 250 gal., with Gallon Markings (includes #16, 18 & 43)	1
	KE00947-1	Primary Agitator, 40 gal., with Liter Markings (includes #16, 18 & 43)	1
	KE00948-1	Primary Agitator, 60 gal., with Liter Markings (includes #16, 18 & 43)	1
	KE00949-1	Primary Agitator, 80 gal., with Liter Markings (includes #16, 18 & 43)	1
	KE00950-1	Primary Agitator, 100 gal., with Liter Markings (includes #16, 18 & 43)	1
	KE00951-1	Primary Agitator, 125 gal., with Liter Markings (includes #16, 18 & 43)	1
	KE00952-1	Primary Agitator, 150 gal., with Liter Markings (includes #16, 18 & 43)	1
	KE009521-1	Primary Agitator, 200 gal., with Liter Markings (includes #16, 18 & 43)	1
	KE009522-1	Primary Agitator, 250 gal., with Liter Markings (includes #16, 18 & 43)	1
50.	KE52687	Roller Bearing	2
51.	RT00505	Hydraulic Hose	specify length
52.	KE00715	Bridge Swivel Housing Assembly	1

REMOTE CONTROL ASSEMBLY

For Standard Direct Steam Mixer Kettles

NOTE: See SWITCH CONFIGURATIONS for applicable contact cartridge/capacitor combinations and part numbers

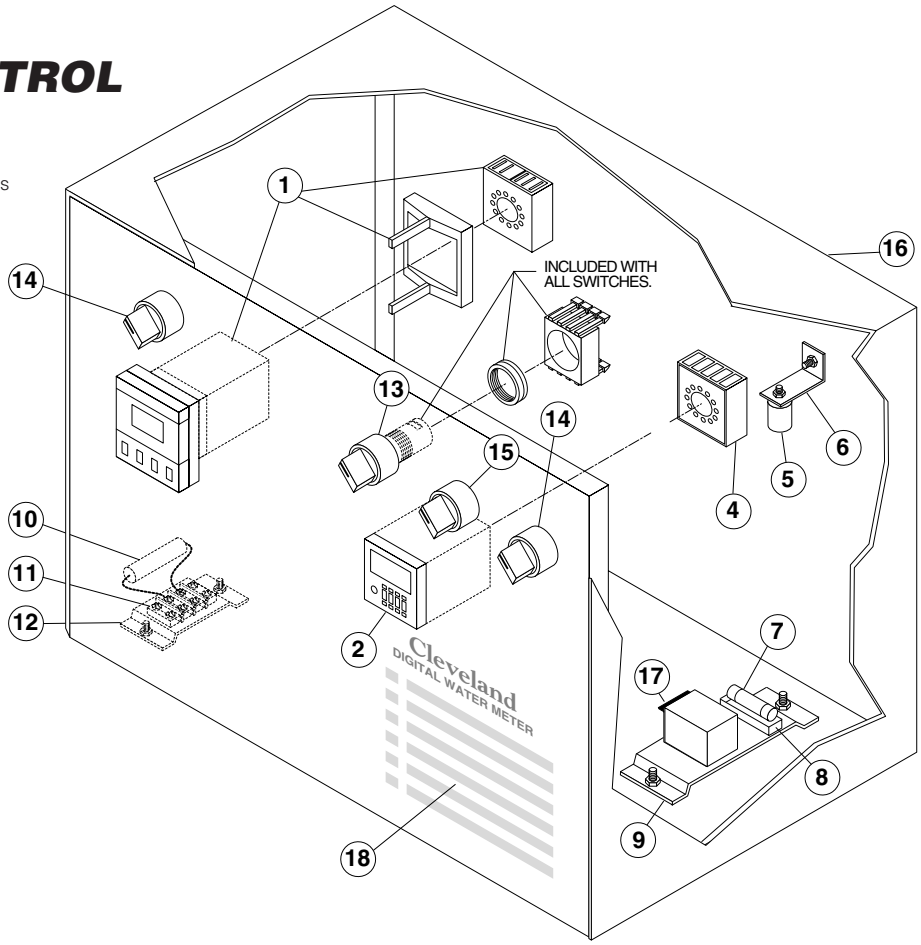

ITEM NO.	PART NO.	DESCRIPTION	QTY.
1.	KE53479	Digital Temperature Controller and Indicator	1
2.	KE53257	Digital Counter	1
3.	KE51857	Front Cover, Digital Counter	1
4.	KE53258	Panel Mount Socket	1
5.	KE52710	Thermostat	1
6.	KE52835	Bracket for Thermostat	1
7.	KE52936	Fuse	1
8.	KE51139	Holder, Fuse	1
9.	KE54402	Mounting Bracket, Fuse	1
10.	KE01820	Ambient Heater Assembly	1
11.	SK50370	Terminal Block	1
12.	KE54402	Mounting Bracket, Terminal Block	1
13.	KE003209-6	Momentary Spring Return Switch Assembly	1
14.	KE003209-1	Switch Assembly, On/Off - Maintained	2
15.	KE003209-7	Momentary Spring Return Switch Assembly	2
16.	KE52272	Cover	1
17.	KE50753-9	Relay	1
18.		*Label:*	1
	KE95229	English	
	KE95229-1	French	

REMOTE CONTROL ASSEMBLY

For Cook Chill Direct Steam Mixer Kettles

NOTE: See SWITCH CONFIGURATIONS for applicable contact cartridge/capacitor combinations and part numbers

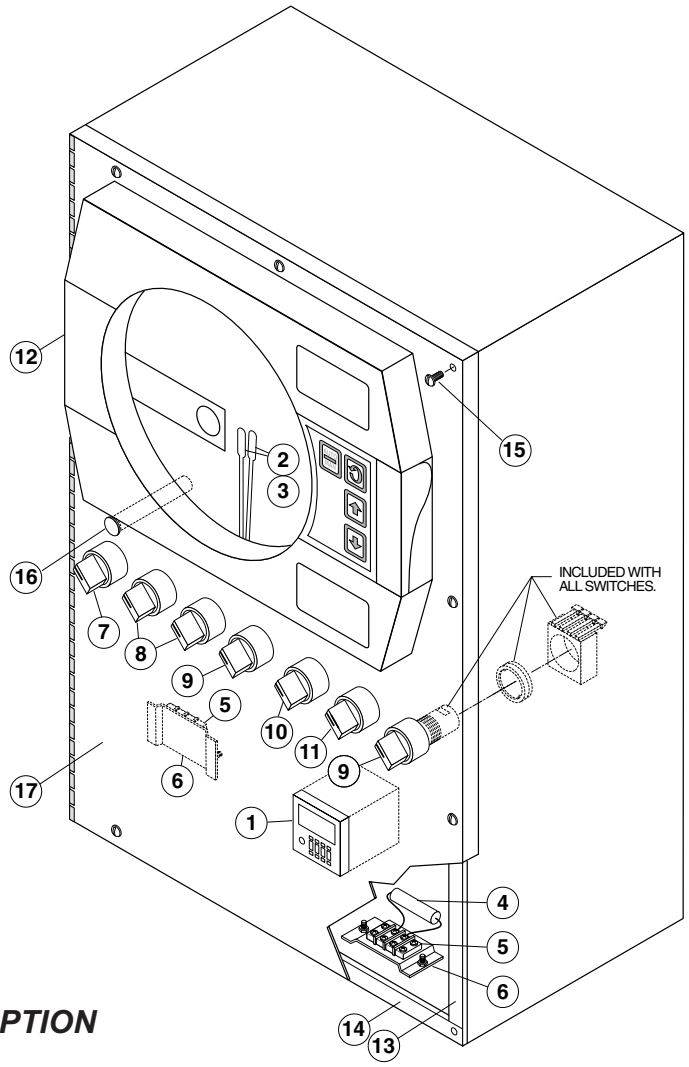

ITEM NO.	PART NO.	DESCRIPTION	QTY.
1.	KE53257	Digital Counter	1
2.	SE50354	Pen Tip, red (pkg. of 5)	1
3.	SE50354	Pen Tip, green (pkg. of 5)	1
4.	KE01820	Ambient Heater Assembly	1
5.	SK50370	Terminal Block	1
6.	KE54402	Mounting Bracket, Terminal Block	1
7.	KE003209-1	Switch Assembly, On/Off - Maintained	1
8.	KE003209-3	Switch Assembly, On/Off/On - Maintained	
		(single kettle)	1
		(twin kettle)	2
9.	KE003209-1	Switch Assembly, On/Off - Maintained	2
10.	KE003209-6	Momentary Spring Return Switch Assembly	1
11.	KE003209-7	Momentary Spring Return Switch Assembly	2
12.	KE53136-1	Chart Recorder (TCR-DTCI) /Temperature Controller	1
12.	KE53136-2	Chart Recorder	1
13.	KE53131	Gasket, 24 1/4"	2
14.	KE53132	Gasket, 15 3/4"	2
15.	FA11091	Screw	10
16.	SK50315-1	Pilot Light	1
17.		*Label:*	1
	KE95438	English	
	KE95438-1	French	

MAIN CONSOLE CONTROLS

For Standard Direct Steam Mixer Kettles

NOTE: See SWITCH CONFIGURATIONS for applicable contact cartridge/capacitor combinations and part numbers

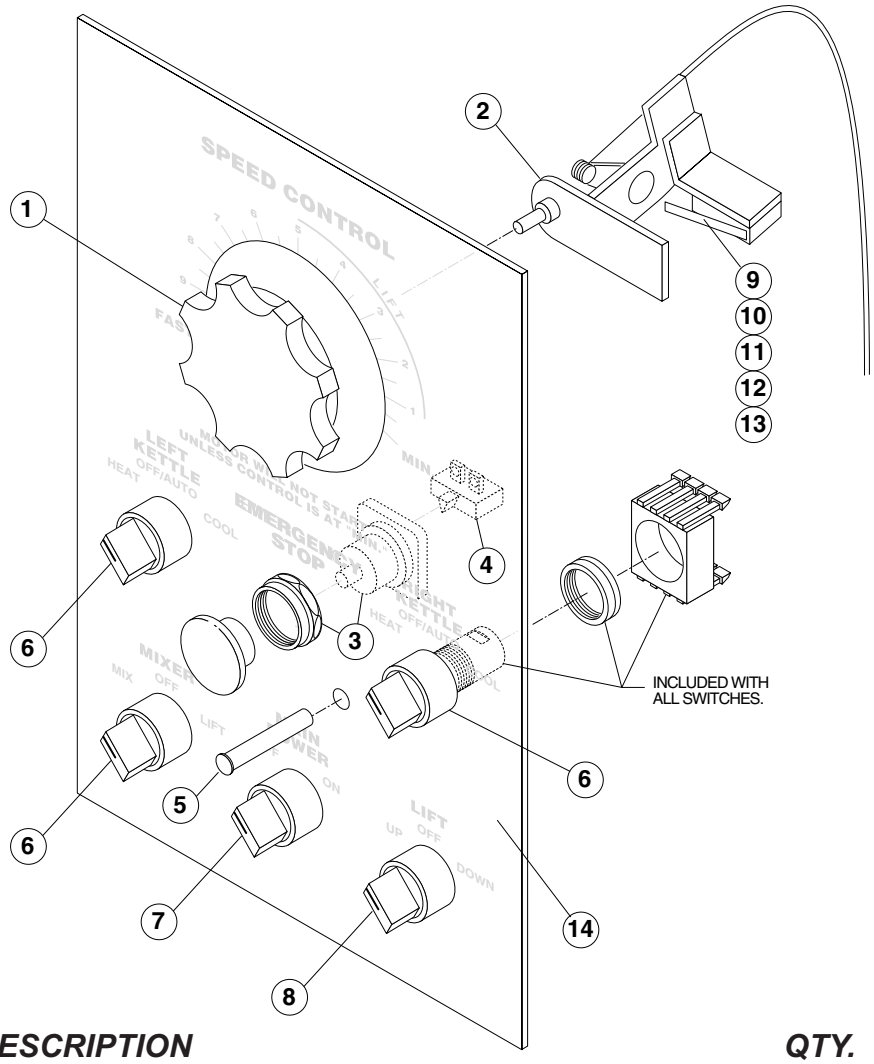

ITEM NO.	PART NO.	DESCRIPTION	QTY.
1.	KE52190	Knob, Speed Control	1
2.	KE00860	Cable and Bracket, Speed Control (includes items 9 - 13)	1
3.	KE53193	Emergency Switch	1
4.	KE53377	Push Button Contact Block	1
5.	SK50315-1	Pilot Light	1
6.	KE003209-5	Switch Assembly, On/Off/On - Maintained	
		(single kettle)	2
		(twin kettle)	3
7.	KE003209-1	Switch Assembly, On/Off - Maintained	1
8.	KE003209-7	Switch Assembly, On/Off/On - Momentary	1
9.	KE52180	Micro Switch	1
10.	FA10032	Machine Screw, #4-40 x 5/8" LG	2
12.	FA32002	Tooth Lock Washer #4	2
13.	FA20000	Hex Nut, #4-40	2
14.	KE95230-E	Label:	1

MAIN CONSOLE CONTROLS

For Cook Chill Direct Steam Mixer Kettles

NOTE: See SWITCH CONFIGURATIONS for applicable contact cartridge/capacitor combinations and part numbers

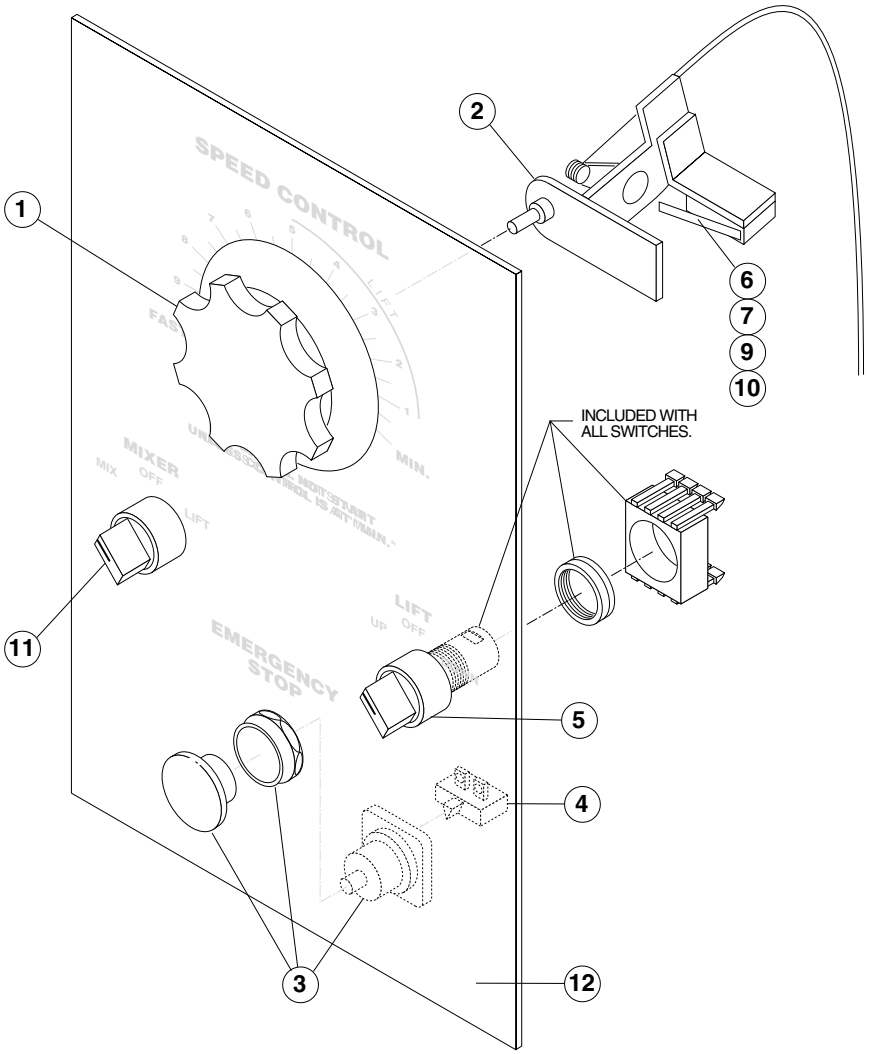

ITEM NO.	PART NO.	DESCRIPTION	QTY.
1.	KE52190	Knob, Speed Control	1
2.	KE00860	Cable and Bracket, Speed Control	1
3.	KE53193	Emergency Switch	1
4.	KE53377	Push Button Contact Block	1
5.	KE003209-8	Switch Assembly, On/Off/On - Momentary	1
6.	KE52180	Micro Switch	1
7.	FA10032	Machine Screw, #4-40 x 5/8" LG	2
9.	FA32002	Tooth Lock Washer, #4	2
10.	FA20000	Hex Nut, #4-40	2
11.	KE003209-5	Switch Assembly, On/Off/On - Maintained	1
12.	KE95230-E	Label:	1

SWITCH CONFIGURATION

For Standard Direct Steam Mixer Kettles

INDEX

Capacitor	Contactor Cartridges *	
C	NO (normally open - green)	NC (normally closed - red)
PART NO.		
KE52074	KE603208-9	KE603208-8

NOTES: *For units built prior to December 2006, the complete switch assembly must be ordered (see applicable drawing).

Refer to Maintenance Section for Switch Disassembly Instructions.

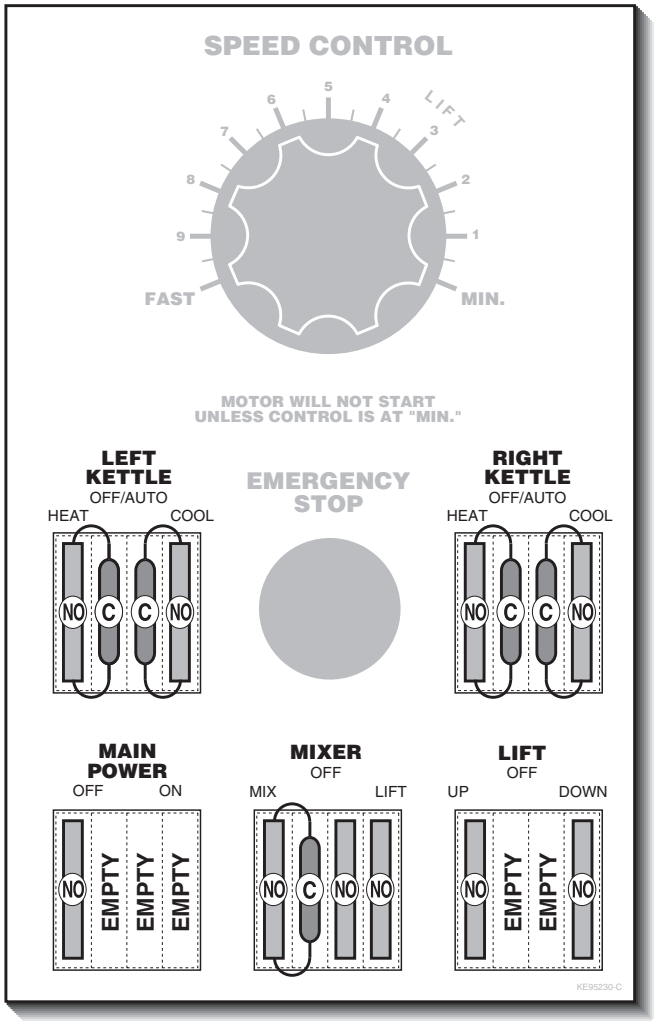

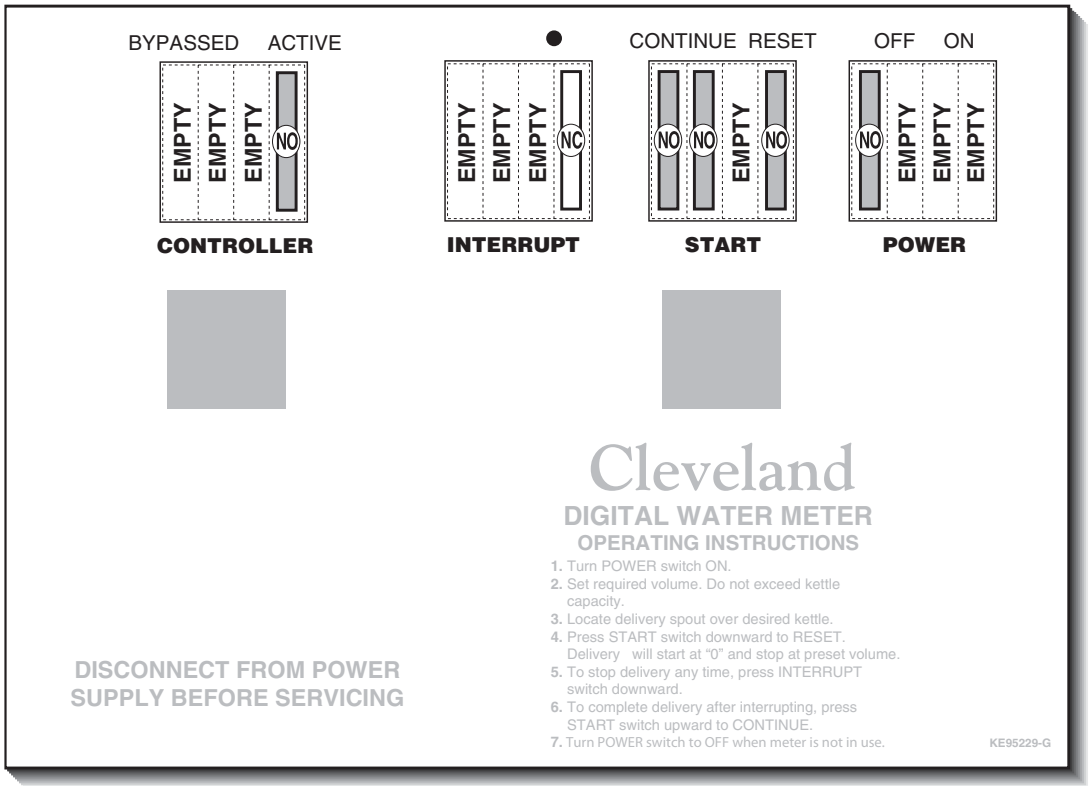

SWITCH CONFIGURATION

For Cook Chill Direct Steam Mixer Kettles

INDEX

Capacitor	Contactor Cartridges	
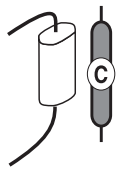	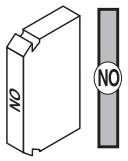	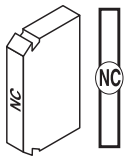
C	NO (normally open - green)	NC (normally closed - red)
PART NO.		
KE52074	KE603208-9	KE603208-8

NOTES: *For units built prior to December 2006, the complete switch assembly must be ordered (see applicable drawing).

Refer to Maintenance Section for Switch Disassembly Instructions.

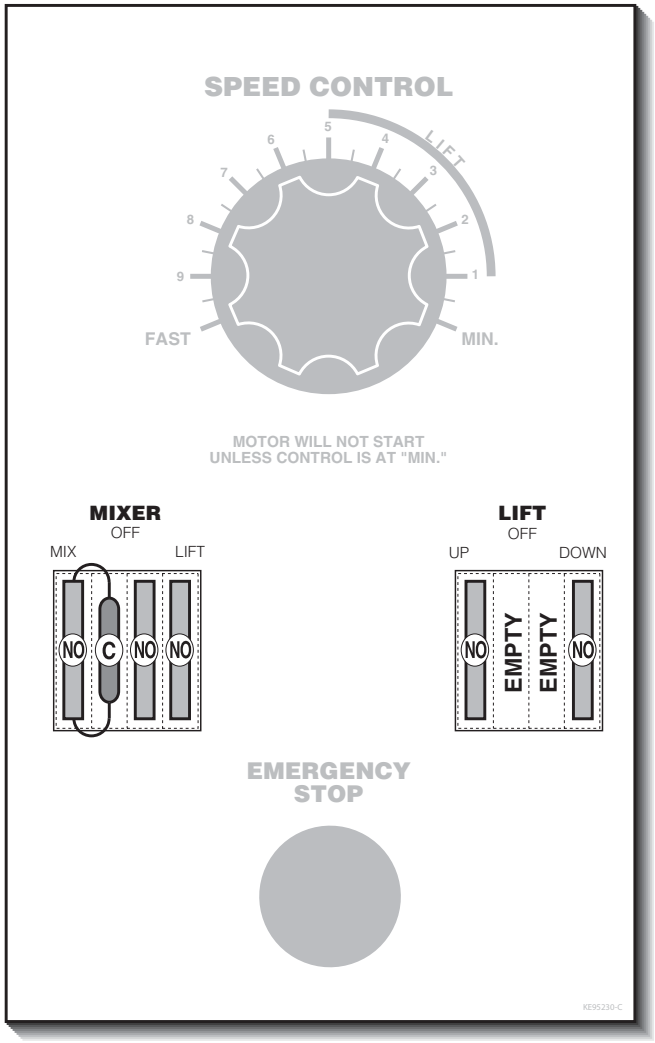

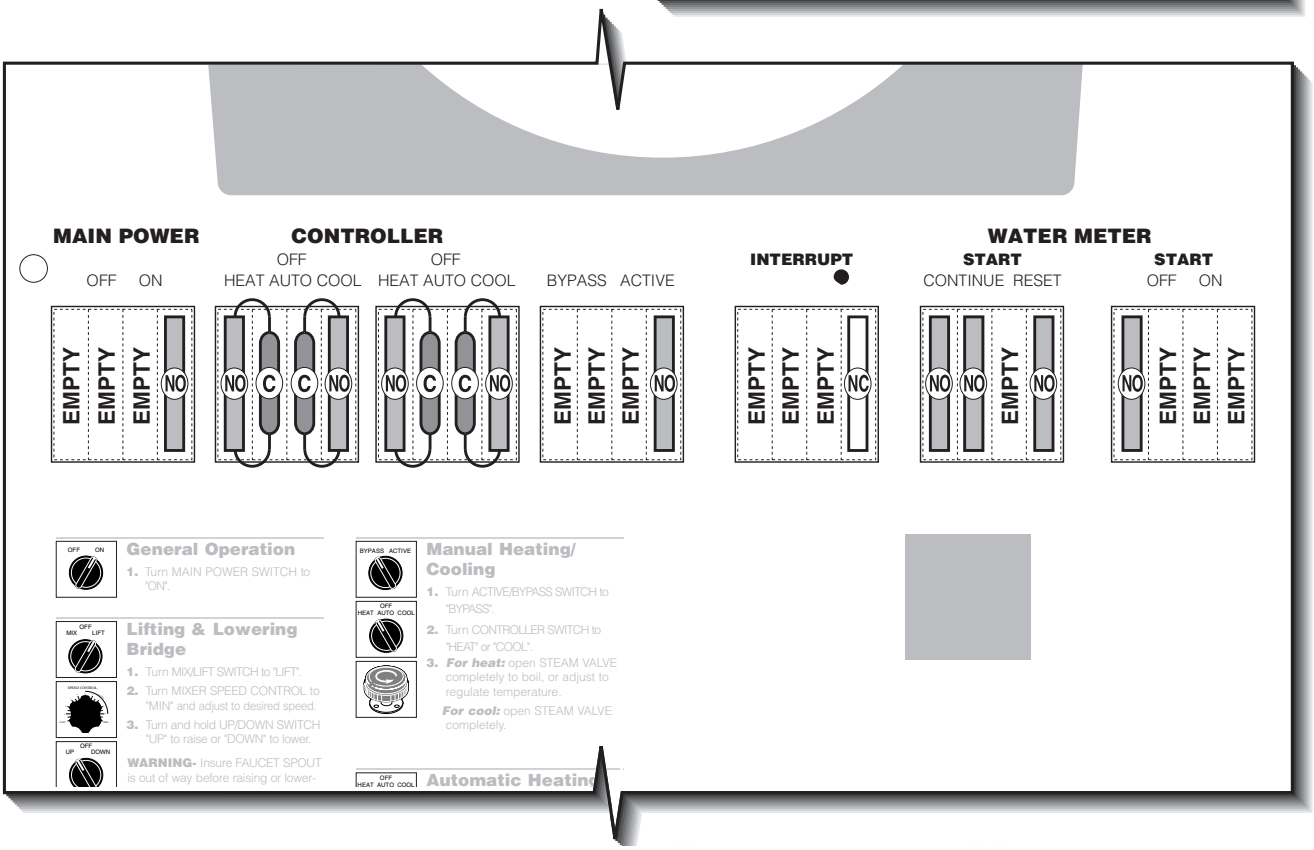

ELECTRICAL COMPONENT ASSEMBLY

For Standard Direct Steam Mixer Kettles

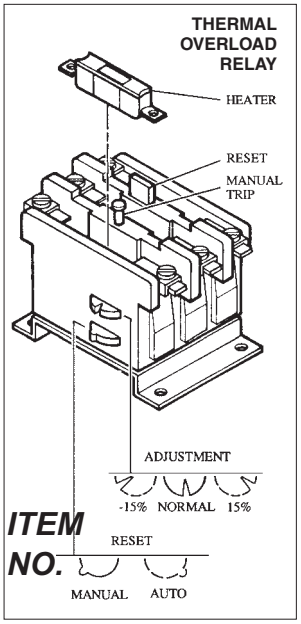

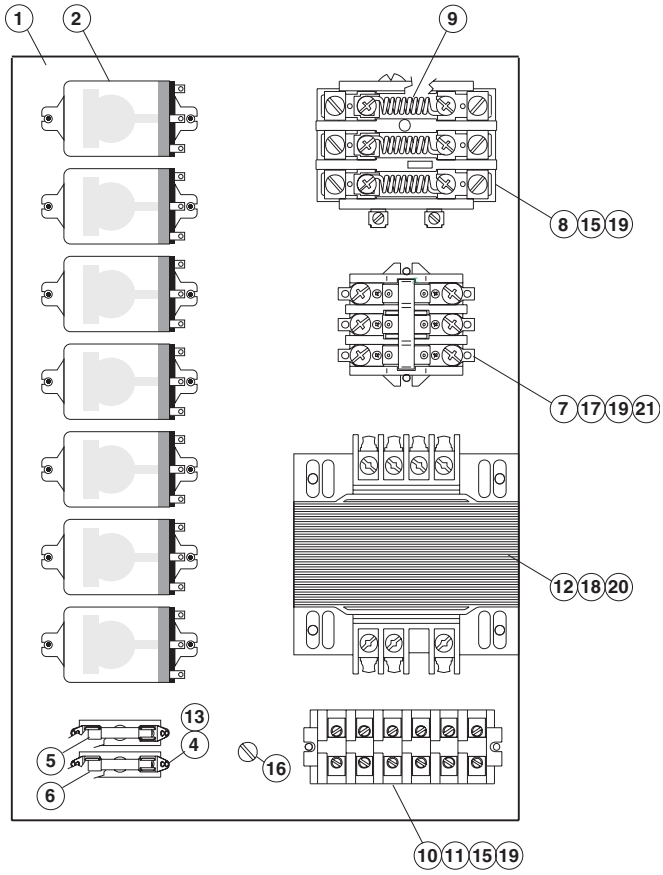

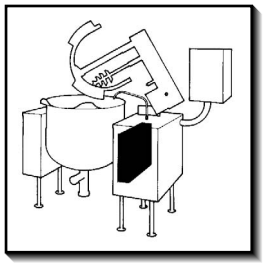

ITEM NO.	PART NO.	DESCRIPTION	QTY.
1.	KE50343-7	Component Mounting Plate	1
2.	KE50753-10	Relays	2-7
4.	KE51139	Fuse Holder	2
5.	SK50445	Fuse (3 amps)	1
6.	KE52936	Fuse (1 amps)	1
7.	KE50750-1	Contactor	1
8.	KE51982	Thermal Overload Relay	1
9.		***Heater for Thermal Overload***	3
	KE52055	200, 208, 220, 240, 380 & 415 volt	
	KE52051	440, 480 volt	
10.	SK50055-1	Terminal Block Sections	3-6
11.	SK50054-1	Terminal Block End Section	1
12.		***Transformer***	1
	KE53838-5	200, 208, 220, 240, 440 & 480 volt	
	KE53838-6	380 & 415 volt	
13.	FA10133	Screws #6-32x3/8" lg.	3
15.	FA10239	Screws #8-32x3/8" lg.	6
16.	FA12500	Screws #8-32x3/8" lg. (brass with undercut)	1
17.	FA10245	Screws #8-32x1" lg.	2
18.	FA10362	Screws #10-32x3/8" lg.	4
19.	FA32005	Lockwashers #8	8
20.	FA32006	Lockwashers #10	4
21.	KE02274	Capacitor Assembly	3

ELECTRICAL COMPONENT ASSEMBLY

For Cook Chill Direct Steam Mixer Kettles

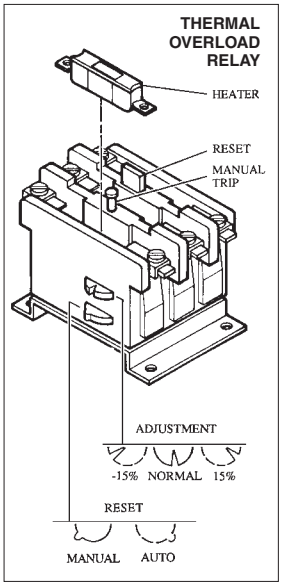

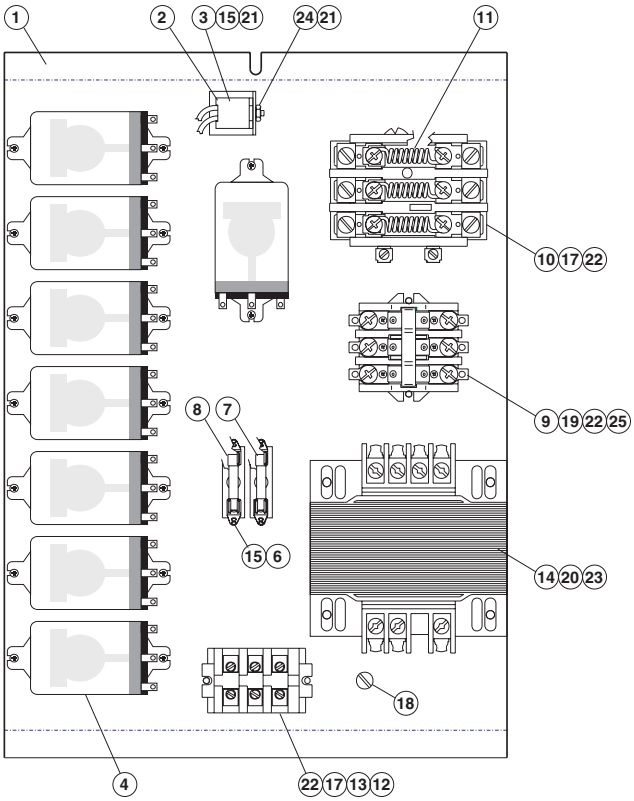

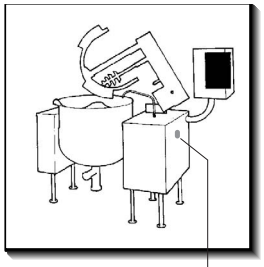

ITEM NO.	PART NO.	DESCRIPTION	QTY.
1.	KE50343-8	Component Mounting Plate	1
2.	KE52710	Thermostat	1
3.	KE52835	Bracket for Thermostat	1
4.	KE50753-10	Relays	6-9
6.	KE51139	Fuse Holder	2
7.	SK50445	Fuse (3 amps)	1
8.	KE52936	Fuse (1 amps)	1
9.	KE50750-1	Contactor	1
10.	KE51982	Thermal Overload Relays	1
11.		***Heater for Thermal Overload***	3
	KE52055	200, 208, 220, 240, 380 & 415 volt	
	KE52051	440, 480 volt	
12.	SK50055-1	Terminal Block Sections	3
13.	SK50054-1	Terminal Block End Section	1
14.		***Transformer***	1
	KE53838-5	200, 208, 220, 240, 440 & 480 volt	
	KE53838-6	380 & 415 volt	
15.	FA10133	Screws #6-32x3/8" lg.	5
16.	FA10135	Screws #6-32x1/2" lg.	7-11
17.	FA10239	Screws #8-32x3/8" lg.	6
18.	FA12500	Screws #8-32x3/8" lg. (brass with undercut)	1
19.	FA10245	Screws #8-32x1" lg.	2
20.	FA10362	Screws #10-32x3/8" lg.	4
21.	FA32004	Lockwashers #6	2
22.	FA32005	Lockwashers #8	8
23.	FA32006	Lockwashers #10	4
24.	FA20002	Hex Nut #6-32	1
25.	KE02274	Capacitor Assembly	3

PLUMBING ASSEMBLY - 10" CONSOLE

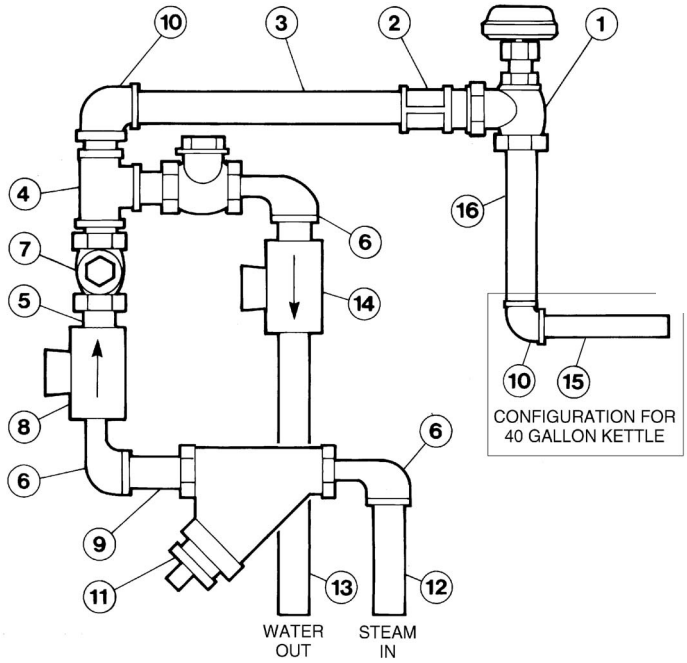

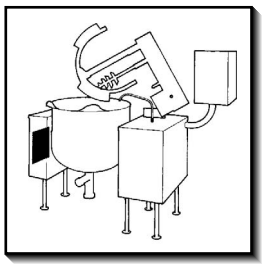

ITEM NO.	PART NO.	DESCRIPTION	QTY.
1.	KE02055-2	Steam Valve 3/4"	1
	KE02055-4	Steam Valve 1 1/4"	
2.	FI00267	Coupling	1
3.	FI00629-31	Nipple	1
4.	FI00179	Tee	1
5.	FI00629-36	Nipple	4
6.	FI00152	Street Elbow	3
7.	KE51653	Check Valve 3/4"	2
	KE51367	Check Valve 1 1/4"	
8.	KE54834-3	* *Solenoid Valve, 3/4" - 50 psi.*	1
	SE50405	Rebuild Kit	
	SE50406	Replacement Coil	
	KE54834-4	* *Solenoid Valve, 3/4" - 100 psi.*	1
	SE50410	Rebuild Kit	
	SE50404	Replacement Coil	
	KE54834-8	* *Solenoid Valve, 1 1/4" - 100 psi.*	1
	SE50409	Rebuild Kit	
	SE50404	Replacement Coil	
9.	FI00629-30	Nipple	1
10.	FI00063	Elbow	2
11.	KE51654	Y-Strainer 3/4"	1
.	KE53008	Y-Strainer 1 1/4"	
12.	FI00629-29	Nipple	1
13.	FI0062919	Nipple	1
14.	KE54834-5	* *Solenoid Valve, 3/4" - 50 psi.*	1
	SE50407	Rebuild Kit	
	SE50401	Replacement Coil	
	KE54834-4	* *Solenoid Valve, 3/4" - 100 psi.*	1
	SE50410	Rebuild Kit	
	SE50404	Replacement Coil	
15.	FI00629-4	Nipple	1
16.	FI00629-7	Nipple	1

***NOTE:** See SOLENOID VALVE MAINTENANCE section for further information.
100 gallons and up use the larger valves.

PLUMBING ASSEMBLY - 18" CONSOLE

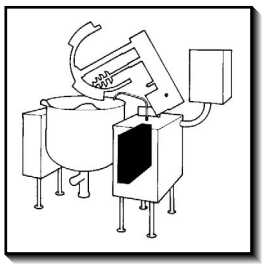

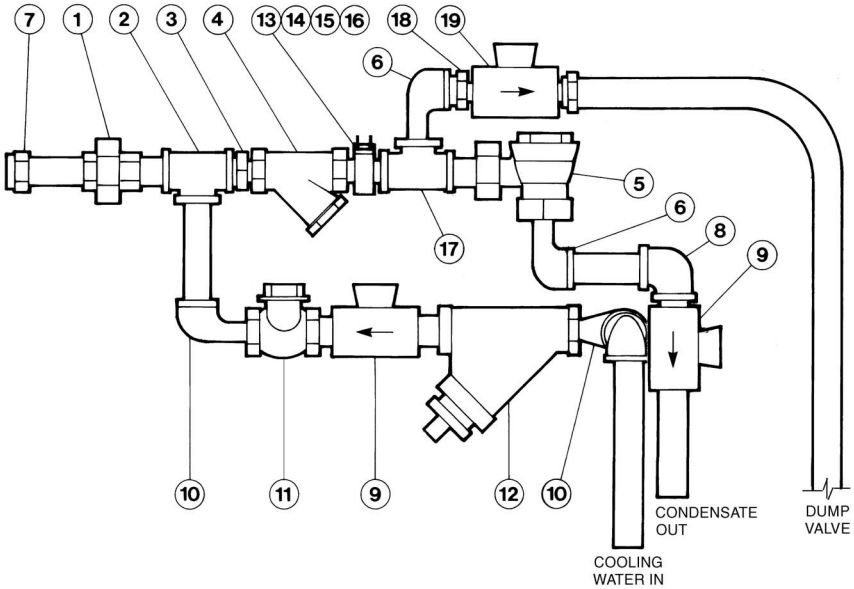

ITEM NO.	PART NO.	DESCRIPTION	QTY.
1.	FI00096	Union	1
2.	F100179	Tee	1
3.	F105130	Reducing Nipple	1
4.	KE52702	Y-Strainer, 1/2"	1
5.	KE52701	Steam Trap	1
6.	FI00151	Street Elbow	3
7.	FI00441	Reducing Bushing	1
8.	FI00363	Reducing Elbow	1
9.	KE54834-5	* *Solenoid Valve, 3/4" - 50 psi.*	1
	SE50407	Rebuild Kit	
	SE50401	Replacement Coil	
	KE54834-4	* *Solenoid Valve, 3/4" - 100 psi.*	1
	SE50410	Rebuild Kit	
	SE50404	Replacement Coil	
10.	FI00143	Street Elbow	3
11.	KE51653	Check Valve	1
12.	KE51654	Y-Stainer	1
13.	KE52666	Thermostat Mtg. Block	1
14.	UR50077	Thermostat	1
15.	FA11052	Bindinghead Screw	1
16.	FA11060	Bindinghead Screw	1
17.	FI00178	Tee	1
18.	FI05089	Reducing Nipple	1
19.	KE54834-2	* *Solenoid Valve, 3/8"*	1
	SE50408	Rebuild Kit	
	SE50404	Replacement Coil	

***NOTE:** See SOLENOID VALVE MAINTENANCE section for further information.

MANUAL TILT - 10" CONSOLE

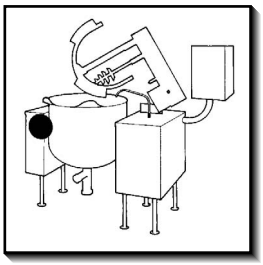

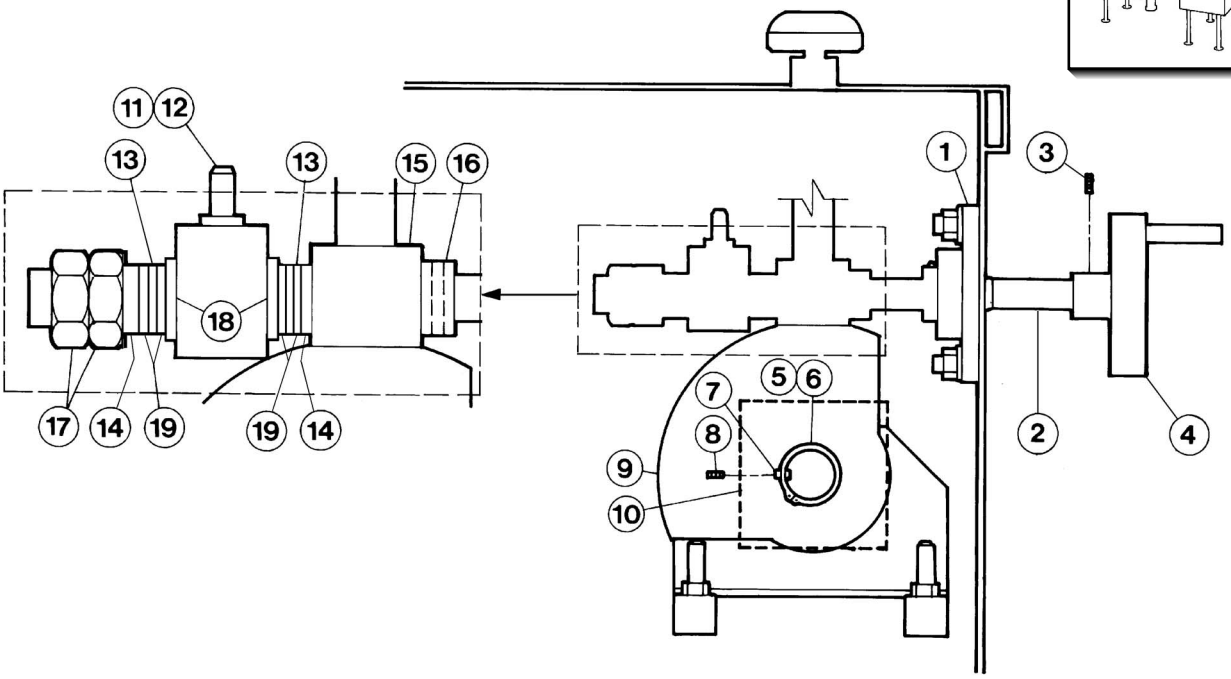

ITEM NO.	PART NO.	DESCRIPTION	QTY.
1.	KE51730	Tilt Shaft Bearing	1
2.	KE50375	Tilt Shaft, Small Gear, 40 to 80 gal.	1
	KE503751	Tilt Shaft, Small Gear, 100 gal. and up	1
3.	FA19505	Handwheel Allen Screw, Hex Socket	1
4.	KE00508	Handwheel Assembly	1
5.	FA95007-1	Retaining Ring	1
6.	FA05002-6	"O" Ring	2
7.	FA95048	Woodruff Key	1
8.	FA19201	Set Screw	1
9.	KE00151	Segment Gear, Small, up to 60 gal.	1
	KE52833	Segment Gear, Large, 80 gal. and up	1
10.	KE00699	Trunnion Housing	1
11.	FA19177	Hex-Socket Set Screw	1
12.	FA20047	Jam Nut	1
13.	KE52191	Roller Bearing	2
14.	KE52193	Thrust Bearing Spacer	2
15.	KE50315	Worm Gear	1
16.	FA95005	Tension Pin	1
17.	FA95008	Hex Nut 3/4-16	2
18.	FA30088	Washer	3
19.	KE52192	Thrust Washer	4

POWER TILT - 10"/12" CONSOLE

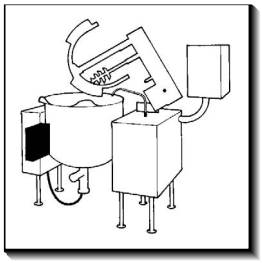

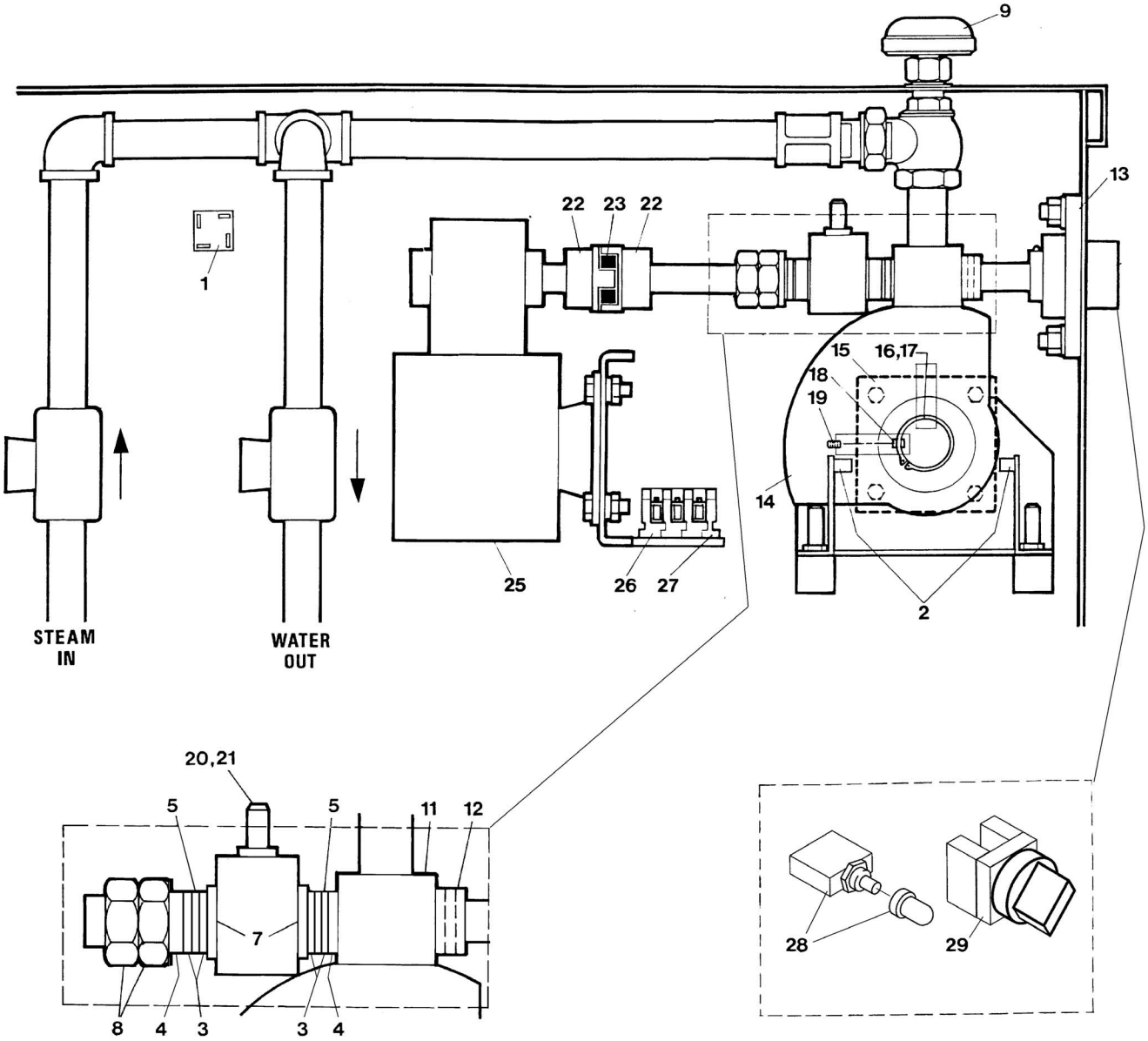

POWER TILT - 10"/12" CONSOLE

ITEM NO.	PART NO.	DESCRIPTION	QTY.
1.	KE50581	Bridge Rectifier	1
2.	KE51007	Micro Switch	2
3.	KE52192	Thrust Washer	4
4.	KE52193	Thrust Bearing Spacer	2
5.	KE52191	Roller Bearing	2
6.	FA30088	Washer	2
8.	FA95008	Hex Nut, 3/4-16	2
9.	SE00028	Knob Assembly	1
11.	KE50315	Worm Gear,	1
12.	FA95005	Tension Pin	1
13.	KE51730	Tilt Shaft Bearing	1
14.	KE00151	Segment Gear, Small, up to 60 gal.	1
	KE52833	Segment Gear, Large, 80 gal. and up	1
15.	KE00699	Trunnion Housing, 40 to 80 gal.	1
	KE001182	Trunnion Housing, 100 gal. and up	1
16.	FA95007-1	Retaining Ring	1
17.	FA05002-6	"O" Ring (40-80 gal.)	2 (per kettle)
	FA05002-27	"O" Ring (40-80 gal.)	2 (per kettle)
18.	FA95048	Woodruff Key	1
19.	FA19201	Set Screw	1
20.	FA19177	Hex-Socket Set Screw	1
21.	FA20047	Jam Nut	1
22.	KE50582	Coupling	2
23.	KE50583	Coupling Insert	1
25.	KE52832-1	Motor	1
26.	SK50055-1	Terminal Block	1
27.	SK50054-1	Terminal Block End-Section	1
28.	KE50579-1	Circuit Breaker. 1.3 Amp.	1
	FA05002-34	"O" Ring, Circuit Breaker	1
	KE50580	Water Resistant Boot	1
29.	KE003209-11	Complete Switch	1
	KE603208-4	Momentary Switch Activator***	1
	KE603208-7	Contact Section Holder, Latch***	1
	KE603208-9	Contact Block***	4

***NOTE**: for units built prior to Dec. 2006 order Complete Switch KE003209-11

WATER METER ASSEMBLY - 18" CONSOLE

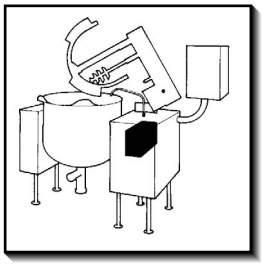

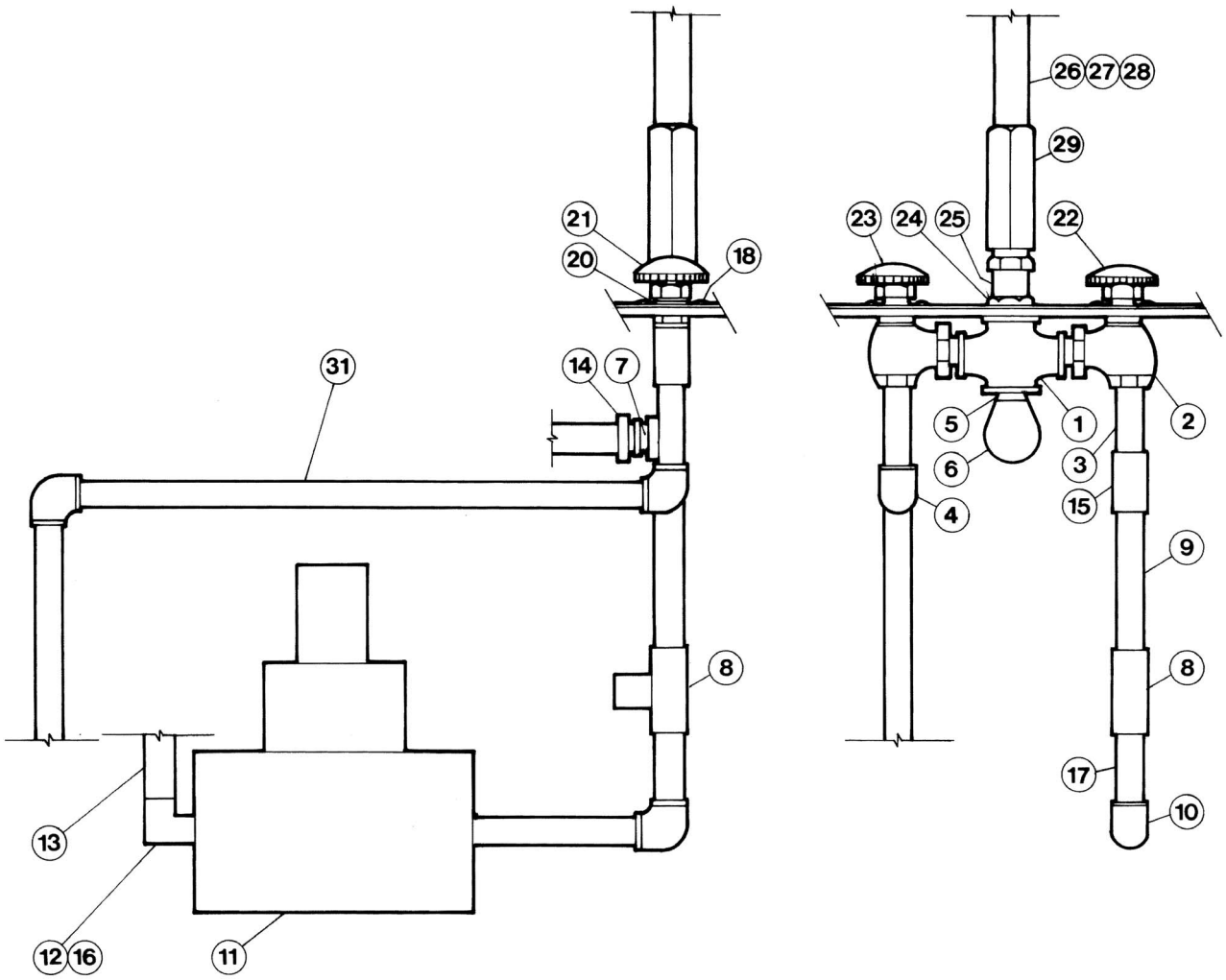

WATER METER ASSEMBLY - 18" CONSOLE

ITEM NO.	PART NO.	DESCRIPTION	QTY.
1.	FI05058	3/4" Cross	1
2.	KE02055-2	Steam Valve Modification	2
3.	N0640B4.5	Nipple	2
4.	FI00063	Elbow 90 degree	4
5.	FI000356	Reducing Bushing	1
6.	KE600812-1	Street Elbow	1
7.	FI05029	Hose Barb	2
8.	KE54834-5	* *Solenoid Valve, 3/4"*	1
	SE50407	Rebuild Kit	
	SE50401	Replacement Coil	
9.	N0640B3	Nipple, Gallon Meter	1
	N0640B3.5	Nipple, Litre Meter	
10.	FI00363-3	Reducing Elbow 90 Degree	1
11.	KE51861	Gallon Meter	1
	KE51860	Litre Meter	
12.	FI00062	Elbow 90 Degree	1
13.	KE52173	1/2"1.D. Hot Water Wash-up Hose	1
14.	FI05220-3	Hose Clamp	2
15.	FI00179	Tee	1
16.	FI05074	Adapter, Gallon Meter	2
	KE600362	Adapter, Litre Meter	
17.	N0640B1.5	Nipple	1
18.	FA11091	Machine Screw	8
20.	KE51369	Steam Valve Flange	2
21.	SE00028	Knob Assembly	2
22.	KE95321	Label "Hot"	1
23.	KE95322	Label "Cold"	1
24.	SD50097	Flanged Nut	1
25.	KE51585	Faucet Spout Fitting	1
26.	KE50825-12	Faucet Spout	1
27.	FA05002-19	"O" Ring	1
28.	FA95022	Retaining Ring Carter	1
29.	KE51736	Long Faucet Nut	1

***NOTE:** See SOLENOID VALVE MAINTENANCE section for further information.

FLUSH PISTON - VALVE *(USED PRIOR TO 2003)*

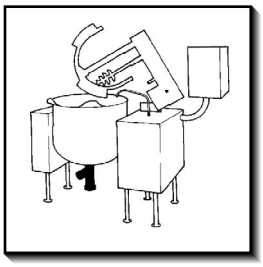

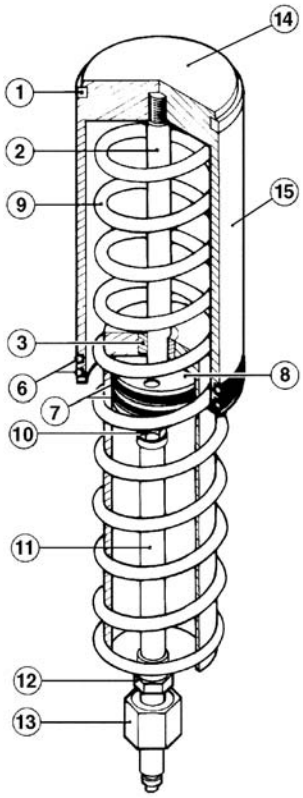

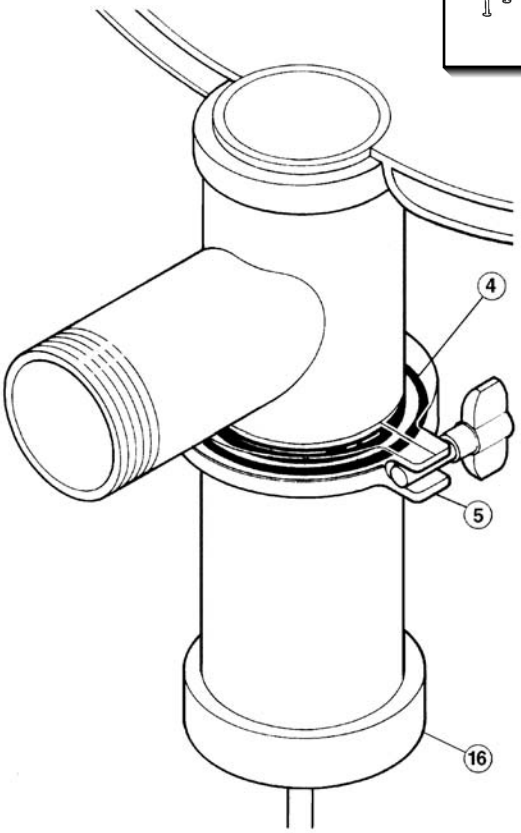

ITEM NO.	PART NO.	DESCRIPTION	QTY.
	T40430	Valve Assembly (includes parts 1 - 16)	1
1.	FA05000	"O" Ring, Cylinder Head	1
2.	KE52345	Piston Shaft	1
3.	KE52346	Air seal	1
4.	KE52347	Sani-Clamp Seal, 4”	1
5.	KE52344	Sani-Clamp, 4”	1
6.	FA05002-22	"O" Ring, Cylinder Body	2
7.	FA05002-21	"O" Ring, Piston	2
8.	KE52315	Piston	1
9.	KE52335	Compression Spring	1
10.-13.	SE00040	Supply Hose Assembly, Piston	1
10.	KE52341	Hose Barb, 1/8” x 1/4”	3
11.	KE52340	Supply Hose, 8”	1
12.	KE52342	Hose Barb, 1/4” x 1/4”	1
13.	KE52338	Quick Connect Male End	1
14.	KE52327	Piston Top	1
15.	KE52328	Piston Cylinder	1
16.	KE52314	Bottom Nut	1

FLUSH PISTON - AIR SYSTEM, 10" CONSOLE

(USED PRIOR TO 2003)

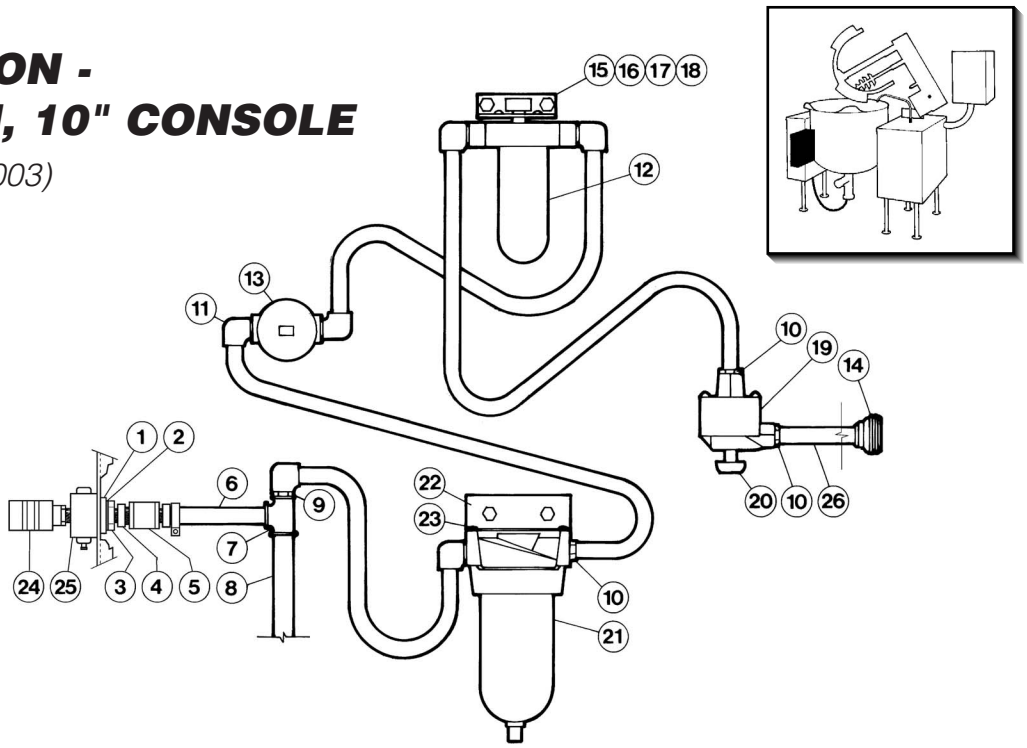

ITEM NO.	PART NO.	DESCRIPTION	QTY.
1.	FA30512	Spacer	1
2.	FA32500	Tooth lockwasher	1
3.	KE52697	Locking nut	1
4.	KE52931	Adapter	1
5.	FI00266	Coupling	1
6.	FI00595-17	Nipple 1/2" NPT	2
7.	FI00178	Tee 1/2" NPT	2
8.	FI00595-12	Nipple 1/2" NPT	1
9.	FI05047	Bushing	1
10.	KE52342	Hose Barb	3
11.	FI05167	Hose Barb 90 Degree Elbow	6
12.	KE52815	Airline Lubricator	1
13.	KE52895	Air Regulator	1
14.	KE52339	Female End Quick Connect	1
15.	KE52932	Bracket For Lubricator	1
16.	FA32006	Toothlock Washer	4
17.	FA21006	Nut	4
18.	FA11091	Machine Screw	2
19.	KE53209	Quick Exhaust Valve	1
20.	KE53210	Muffler	1
21.	KE52031	Air Line Filter c/w Bracket	1
22.	KE53251	Air Line Filter Bracket	1
23.	FA11144	Bindinghead Screw	4
24.	FI05166	Quick connect	1
25.	KE54280	Slide valve	1
26.	KE53215	1/4" Air Hose, 65" Long	1

FLUSH PISTON - LUBRICATOR *(USED PRIOR TO 2003)*

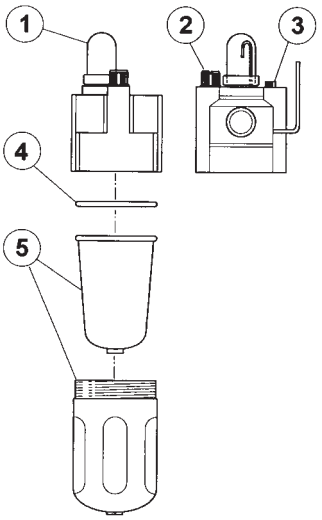

ITEM NO.	PART NO.	DESCRIPTION	QTY.
1.	FA30512	Spacer	1
1.-5	KE52815	Lubricator c/w Bracket	1
1.	SE50418	Sight Dome Assembly	1
2.	SE50419	Filler Cap Assembly	1
3.	SE50420	Needle Valve Assembly	1
4.	SE50422	"O" Ring	1
5.	SE50423	Bowl/Guard Assembly	1

FLUSH PISTON - FILTER *(USED PRIOR TO 2003)*

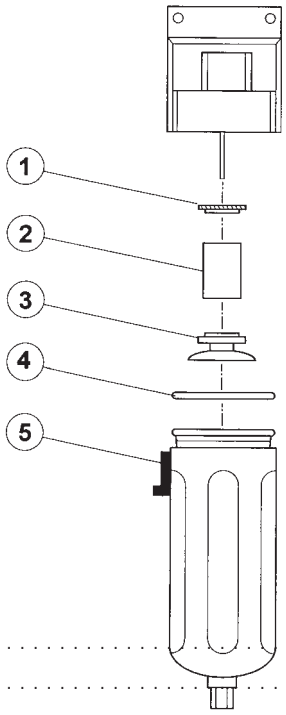

ITEM NO.	PART NO.	DESCRIPTION	QTY.
1.-5	KE52031	Filter c/w Bracket	1
1.	SE50425	Deflector	1
2.	SE50426	Filter Element	1
3.	SE50427	Baffle	1
4.	SE50428	"O" Ring	1
5.	SE50429	Bowl/Guard Assembly	1

FLUSH PISTON - VALVE *(USED AFTER TO 2003)*

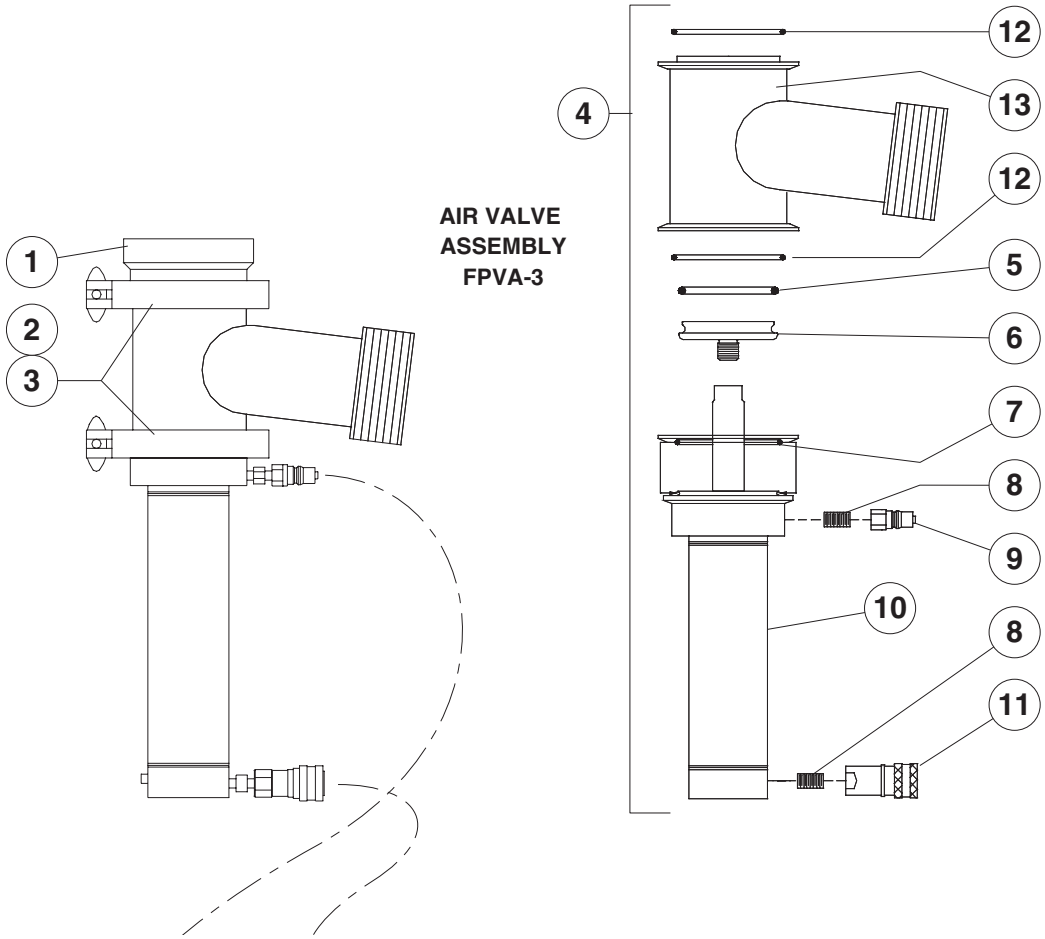

ITEM ON.	PART NO.	DESCRIPTION	QTY.
1.	KE55210	WELD RING, KETTLE BOTTOM OUTLET	1
2.	FI05144-3	SANI CLAMP, 3”	2
3.	KE52154-4	GASKET, SANI CLAMP, 3”	2
4.	KE02291	COMPLETE ACTUATOR AND DISCHARGE VALVE ASSEMBLY *INCLUDES PARTS 5. - 13.*	1
5.	KE55248	BUNA-N O-RING	1
6.	KE55249	REPLACEABLE S.S. PLUNGER HEAD	1
7.	KE55250	BUNA-N O-RING	1
8.	KE55251	1/8 NPT S.S. HYDRAULIC CLOSE NIPPLE	2
9.	KE55252	MALE S.S. QUICK DISCONNECT	1
10.	KE55253	AIR OPERATED CYLINDER	1
11.	KE55254	FEMALE S.S. QUICK DISCONNECT	1
12.	KE55255	BUNA-N O-RING	2
13.	KE55256	BODY, DISCHARGE VALVE	1

FLUSH PISTON - AIR SYSTEM, 10" CONSOLE

(USED AFTER TO 2003)

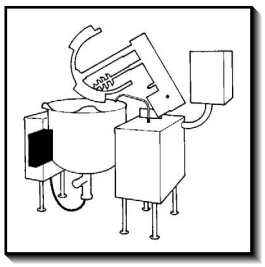

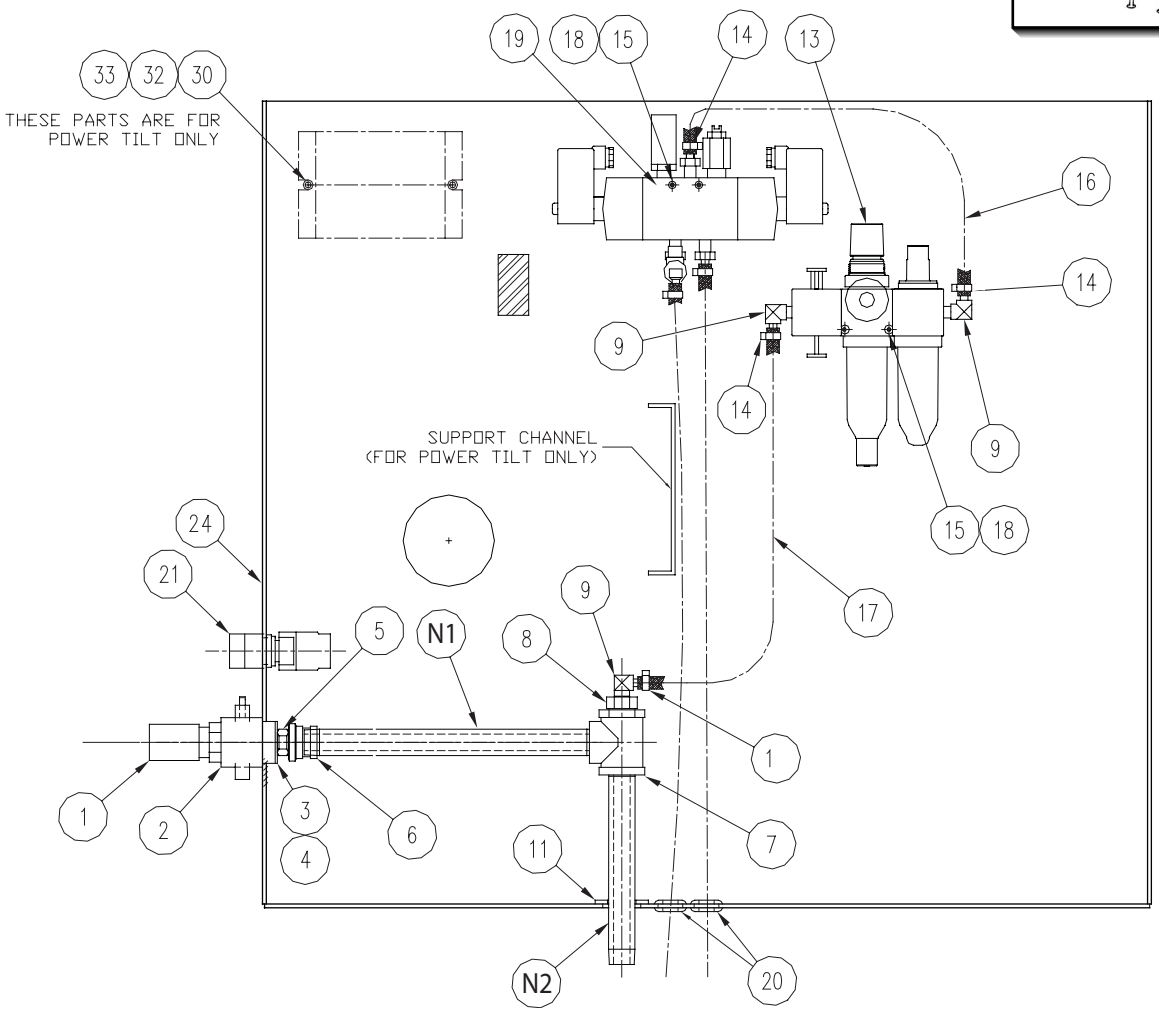

ITEM NO.	PART NO.	DESCRIPTION	QTY.
I	KE601603	QUICK CONNECT	I
2	KE601601	SLIDE VALVE	1
3	FA30512	SPACER WASHER	i
4	FA32500	TOOTH LOCK WASHER 7/8 DIA,	1
5	KE52697	NUT 1/2 NIPS BRASS	~~
6	KE601602	AIR FITTING	I
7	KE600814-1	TEE 1/2 NPT (FIP x FIP x FIP)	I
8	FI00351	BUSHING 1/2 MIP x 1/4 FIP	1
9	FI05318	HOSE BARB 90' ELBOW	3
11	FA30090	WASHER 15/16 IDxl 3/4 ODxl/8 THK	1
13	KE02369	FILTER-REGULATOR ASSEMBLY	1
14	FI05220-1	GEAR CLAMP	4
15	FA21002	#6-32 HEX NUT SS	4
16	KE532176	PNEUMATIC HOSE (1/4 I.D.xl2 1/2 LG.)	1

FLUSH PISTON - AIR SYSTEM, 10" CONSOLE

(USED AFTER TO 2003)

17	KE532177	PNEUMATIC HOSE, (1/4 I.D.x 31 LG.)	1
18	FA32004	TOOTH LOCK WASHER, #6 ZINC PLATED	4
19	SEE FOLLOWING PAGE: FLUSH PISTON - AIR SOLENOID VALVE (Used after to 2003)		
20	KE50555-3	GROMMET	2
21	KE01812-1	SWITCH ON/OFF/ON (MAINT/MAINT/MOM)	1
24	KE95481-5	LABEL, PRODUCT DISCHARGE VALVE	1
25	KE55232	WIRING DIAGRAM FOR AIR VALVE (NOT SHOWN)	1

POWER TILT OPTION

30	KE02185	COMPONENT PLATE	1
32	FA21007	#10-32 HEX NUT SS	2
33	FA40000-6	TOOTH LOCK WASHER, #10 ZINC PLATED	2

NIPPLES

for MKDL-40CC

N1	FI00595-17	NIPPLE, 1/2 NPT x 11 1/8 LG. BRASS	1
N2	FI0059 5-12	NIPPLE, 1/2 NPT x 10 1/2LG. BRASS	1

for MKDL-60CC

N1	FI00595-17	NIPPLE, 1/2 NPT x 11 1/8 LG. BRASS	1
N2	FI00595-13	NIPPLE, 1/2 NPT x B 7/8 LG. BRASS	1

for MKDL-80CC

N1	FI00595-17	NIPPLE, 1/2 NPT x 11 1/8 LG. BRASS	1
N2	FI00595-14	NIPPLE, 1/2 NPT x 8 1/2 LG. BRASS	1

for MKDL-100CC

N1	FI00595-12	NIPPLE, 1/2 NPT x 10 1/2 LG. BRASS	1
N2	FI00595-15	NIPPLE, 1/2 NPT x 6 7/8 LG. BRASS	1

for MKDL-125CC

N1	FI00595-19	NIPPLE, 1/2 NPT x 13 7/8 LG. BRASS	1
N2	FI00595-16	NIPPLE, 1/2 NPT x 7 5/8 LG. BRASS	1

for MKDL-150CC

N1	FI00595-12	NIPPLE, 1/2 NPT x 10 1/2 LG. BRASS	1
N2	FI00595-7	NIPPLE, 1/2 NPT x 4 LG.BRASS	1

for MKDL-200CC

N1	FI00595-19	NIPPLE, 1/2 NPT x 13 7/8 LG. BRASS	1
N2	FI00595-11	NIPPLE, 1/2 NPT x 6 LG. BRASS	1

for MKDL-250CC

N1	FI00595-19	NIPPLE, 1/2 NPT x 13 7/8 LG. BRASS	1
N2	FI00595-7	NIPPLE, 1/2 NPT x 4 LG. BRASS	1

FLUSH PISTON - AIR SOLENOID VALVE

(USED AFTER TO 2003)

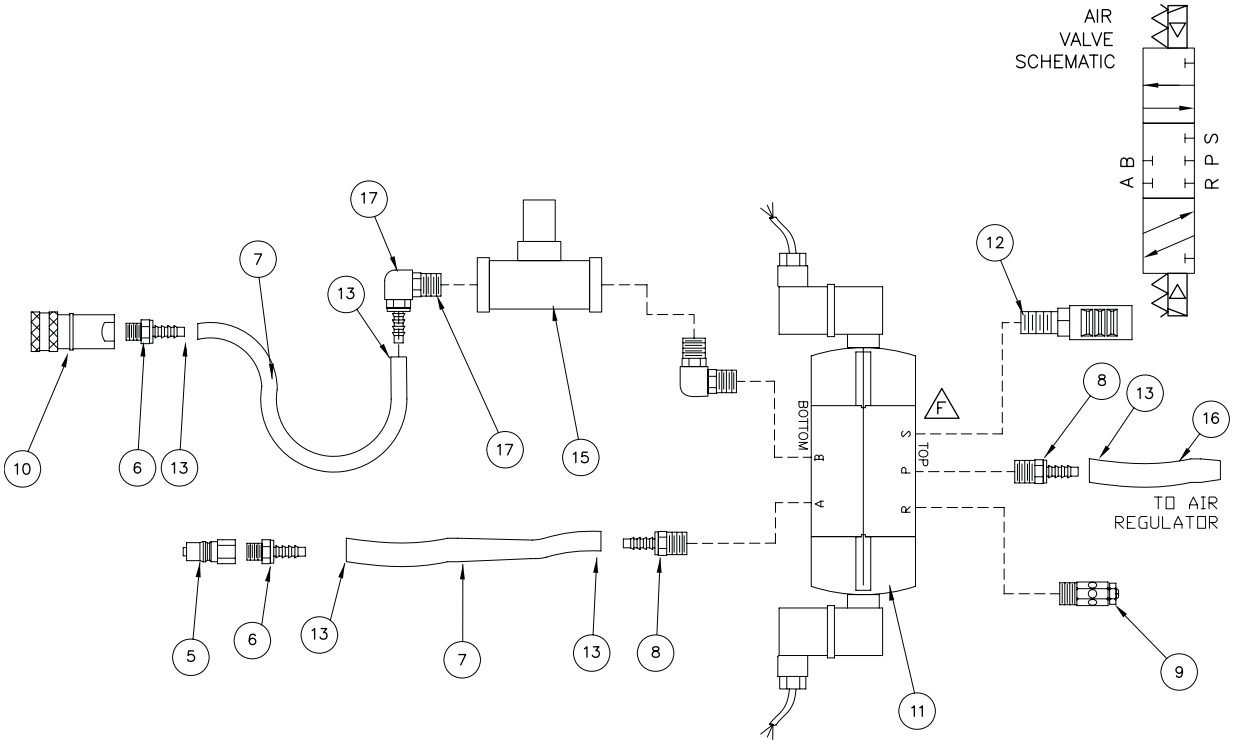

ITEM ON.	*PART NO.*	*DESCRIPTION*	*QTY.*
5.	KE55257	MALE QUICK PLUG	1
6.	FI05317-1	HOSE BARB, 1/8' NPT MALE TO 1/4” HOSE	2
7.	KE55259-1	1/4” ID X 6 FT LONG HOSE, 250 #W,P.	2
8.	FI05317-2	HOSE BARB, 1/4” NPT MALE TO 1/4” HOSE	2
9.	KE55261-1	EXHAUST MUFFLER, 1/8”	1
10	KE55262	FEMALE QUICK PLUG	1
11.	KE55263-1	5 WAY AIR SOLENOID VALVE	1
12.	KE55264-1	STANDARD 1/8” MUFFLER	1
13.	FI05220-1	GEAR CLAMP FOR 1/4” I,D, HOSE (NOT SHOWN)	5
14.	FI05030-2	90° 1/4” ELBOW, MALE PIPE THREAD	1
15.	KE55305	1/4” FLOW CONTROL	1
16.	KE55259-2	/4” ID X 3 FT LONG HOSE, 250 #W,P.	1
17.	FI05318	90° ELBOW HOSE BARB/ 1/4” HOSE I,D./14” PIPE, BRASS	1

BUTTERFLY VALVE

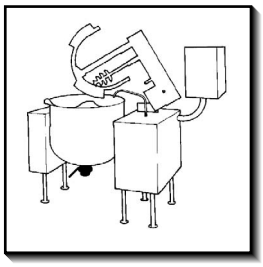

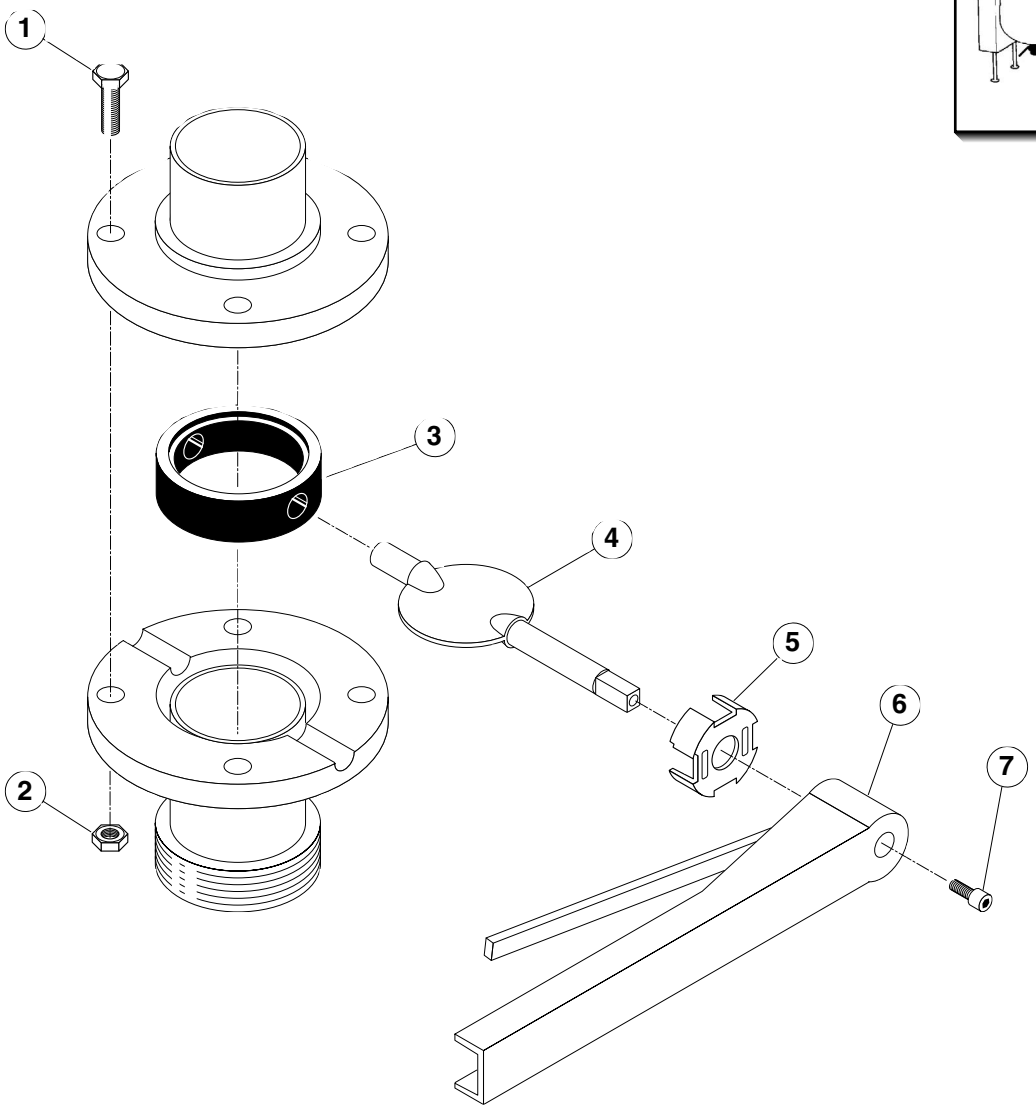

ITEM NO.	PART NO.	DESCRIPTION	QTY.
1. - 7.	KE51603	Butterfly Valve, 2" (includes housing)	1
	KE52286	Butterfly Valve, 3" (includes housing)	1
1.	FA11224	Bolt, 5/16-18x1" S.S.	4
2.	FA21024	Nut, 5/16-18	4
3.	SE50433	Seat, 2"	1
	SE50433-1	Seat, 3"	1
4.	SE50434	Stem, 2"	1
	SE50434-1	Stem, 3"	1
5.	SE50435	Locking Spider, 2"	1
	SE50435-1	Locking Spider, 3"	1
6.	SE50436	Handle Assembly	1
7.	SE50437	Allen Bolt	1

MAIN COMPONENT REFERENCE CHARTS

Valves:

KETTLE SIZE	PRES-SURE	STEAM TRAP	SAFETY VALVE	MANUAL VALVE	CHECK VALVE	STRAINER	SOLENOIDS				
GALLONS	*PSI*						*STEAM*	*CONDENSATE*	*POTABLE WATER*	*COOLING WATER*	*DUMP VALVE*
40	50	1/2" NPT KE51248	3/4" x 3/4" KE51720	3/4" x 3/4" KE02055-2	3/4" KE51653	3/4" KE51654	3/4" x 3/4" KE54834-3	3/4" x 3/4" KE54834-5	3/4" x 3/4" KE54834-5	3/4" x 3/4" KE54834-5	3/8" x 3/8" KE54834-2
60-80	50	1/2" NPT KE51248	3/4" x 3/4" KE51720	3/4" x 3/4" KE02055-2	3/4" KE51653	3/4" KE61654	3/4" x 3/4" KE54834-3	3/4" x 3/4" KE54834-5	3/4" x 3/4" KE54834-5	3/4" x 3/4"" KE54834-5	3/8" x 3/8" KE54834-2
100-125	35	1/2" NPT KE51248	1-1/4" x 1-1/4" KE53144	1-1/4" x 1-1/4" KE02055-4	1-1/4" KE51367	1-1/4" KE53008	1-1/4" x 1-1/4" KE54834-8	3/4" x 3/4" KE54834-5	3/4" x 3/4" KE54834-5	3/4" x 3/4"" KE54834-5	3/8" x 3/8" KE54834-2
150	35	1/2" NPT KE51248	1-1/4" x 1-1/4" KE53144	1-1/4" x 1-1/4" KE02055-4	1-1/4" KE51367	1-1/4" KE53008	1-1/4" x 1-1/4" KE54834-8	3/4" x 3/4" KE54834-5	3/4" x 3/4" KE54834-5	3/4" x 3/4"" KE54834-5	3/8" x 3/8" KE54834-2
200-250	35	1/2" NPT KE51248	1-1/4" x 1-1/4" KE53144	1-1/4" x 1-1/4" KE02055-4	1-1/4" KE51367	1-1/4" KE53008	1-1/4" x 1-1/4" KE54834-8	3/4" x 3/4" KE54834-5	3/4" x 3/4" KE54834-5	3/4" x 3/4"" KE54834-5	3/8" x 3/8" KE54834-2
40	100	1/2" NPT KE53160	3/4" x 1" KE53158	3/4" x 3/4" KE02055-2	3/4" KE51653	3/4" KE61654	3/4" x 3/4" KE54834-4	3/4" x 3/4" KE54834-4	3/4" x 3/4" KE54834-5	3/4" x 3/4"" KE54834-4	3/8" x 3/8" KE54834-2
60-80	100	1/2" NPT KE53160	3/4" x 1" KE53158	3/4" x 3/4" KE02055-2	3/4" KE51653	3/4" KE61654V	3/4" x 3/4" KE54834-4	3/4" x 3/4" KE54834-4	3/4" x 3/4" KE54834-5	3/4" x 3/4"" KE54834-4	3/8" x 3/8" KE54834-2
100-125	100	1/2" NPT KE53160	1-1/4" x 1-1/4" KE53162	1-1/4" x 1-1/4" KE02055-4	1-1/4" KE51367	1-1/4" KE53008	1-1/4" x 1-1/4" KE54834-8	1-1/4" x 1-1/4" KE54834-8	3/4" x 3/4" KE54834-5	3/4" x 3/4"" KE54834-5	3/8" x 3/8" KE54834-2
150	100	1/2" NPT KE53160	1-1/4" x 1-1/4" KE53162	1-1/4" x 1-1/4" KE02055-4	1-1/4" KE51367	1-1/4" KE53008	1-1/4" x 1-1/4" KE54834-8	1-1/4" x 1-1/4" KE54834-8	3/4" x 3/4" KE54834-5	1-1/4" x 1-1/4"" KE54834-8	3/8" x 3/8" KE54834-2
200-250	100	1/2" NPT KE53160	1-1/4" x 1-1/4" KE53162	1-1/4" x 1-1/4" KE02055-4	1-1/4"" KE51367	1-1/4" KE53008	1-1/4" x 1-1/4" KE54834-8	1-1/4" x 1-1/4" KE54834-8	3/4" x 3/4" KE54834-5	1-1/4" x 1-1/4"" KE54834-8	3/8" x 3/8" KE54834-2

Mechanical:

KETTLE SIZE	PRESSURE	GEAR SIZE	TILT	HYDRAULIC MOTORS	
GALLONS	*PSI*		*STANDARD*	*PRIMARY*	*SECONDARY*
40	50	KE00151 (SMALL)	MANUAL	KE51846	KE51845
60-80	50	KE00151 (SMALL)	MANUAL	KE51938	KE51845
100-125	35	KE52833 (BIG)	MANUAL	KE51938	KE51845
150	35	KE52833 (BIG)	POWER	KE51938	KE51845
200-250	35	KE52833 (BIG)	POWER	KE53004	KE53005
40	100	KE00151 (SMALL)	MANUAL	KE51846	KE51845
60-80	100	KE00151 (SMALL)	MANUAL	KE51938	KE51845
120-125	100	KE52833 (BIG)	MANUAL	KE51938	KE51845
150	100	KE52833 (BIG)	POWER	KE51938	KE51845
200-250	100	KE52833 (BIG)	POWER	KE53004	KE53005

Scraper Blades:

KETTLE SIZE	
GALLONS	*QUANTITY*
40	22
60	26
80	30
100	34
125	38
150	38
200	44
250	48

MAINTENANCE

INSPECTION AND MAINTENANCE CHECK LIST

Cleveland Range equipment requires little preventative maintenance. We do however provide the following chart as a guide line for inspection and maintenance to keep your unit functioning at 100%.

MONTHLY INSPECTIONS

Item	Inspection
Item Switches	Inspect switches for damage and correct operation. Replace as required.
Product Drain Valves	
Tangent Draw-Off Valve	Inspect parts for damage. Test valve for leakage. Replace as required.
Butterfly Valve.	Inspect parts for damage. Test valve for leakage. Replace as required.
Air Valve	Inspect parts for damage. Test valve for leakage. Check valve seals for air leakage. Inspect supply hose and fittings. Replace as required. Inspect air filter and replace if required.

SIX MONTH MAINTENANCE

Lubrication	Grease trunnion housings. Grease bridge swivel assembly. Use "Never Seize" on tilt worm and gear.
Strainers	Clean strainers in steam in and cooling water supply lines.

YEARLY MAINTENANCE

Lubrication	Drain hydraulic oil and remove filter. Replace oil and filter (see Hydraulic Oil Replacement Procedure.
Solenoid Valves	Inspect solenoid valves for proper operation. Clean or replace as required.

WARRANTY

Our Company supports a worldwide network of Maintenance and Repair Centers. Contact your nearest Maintenance and Repair Centre for replacement parts, service, or information regarding the proper maintenance and repair of your cooking equipment

In order to preserve the various agency safety certification (UL, NSF, ASME/Ntl. Bd., etc.), only factory-supplied replacement parts should be used. The use of other than factory supplied replacement parts will void warranty.

AIR LINE LUBRICATOR OIL FILLING PROCEDURE

1. Disconnect air supply and bleed system.
2. Remove cover on console (see PARTS LIST - PNEUMATIC COMPONENTS).
3. Check for oiler location.

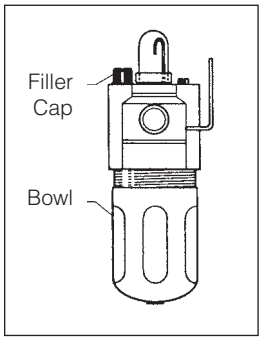

Oiler

4. Inspect oil level in bowl.
5. Remove filler cap.
6. Add mineral oil as required.
7. Replace filler cap and console cover.

AIR FILTER REPLACEMENT PROCEDURE

1. Disconnect air supply and bleed system.
2. Remove cover on console (see Parts List - Pneumatic Components).
3. Check for filter location.

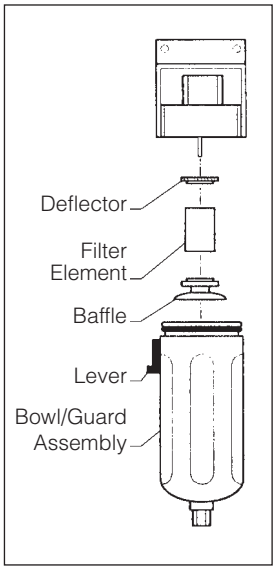

Air Filter

4. Push lever down and rotate bowl/ guard assembly 1/8 turn.
5. Push down on bowl/guard assembly and remove.
6. Unscrew baffle and remove filter element, inspect and replace filter if required.
7. Replace filler cap and cover.

AUTOMATIC DUMP VALVE

Replacing "O" rings (8):

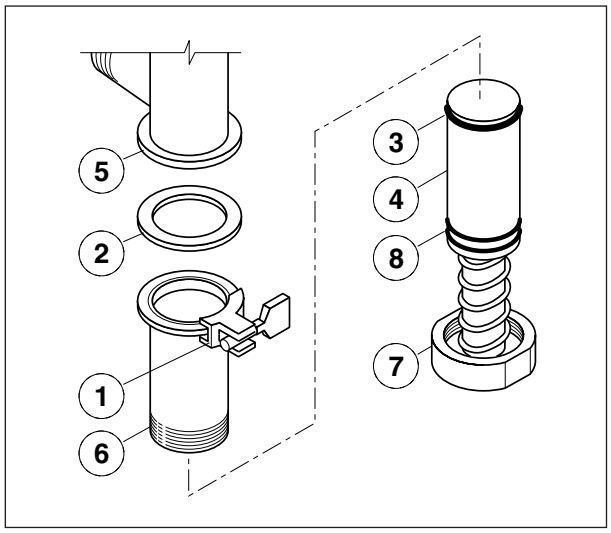

Automatic Dump Valve

1. Disassemble valve as per daily cleaning instructions.
2. Holding lower valve body (**6**), unscrew valve bottom (**7**).
3. Pull lower valve body out from cylinder body.
4. Replace "O" rings (**8**), as required.
5. Coat cylinder body and "O" rings with cooking oil or food-safe grease.
6. Reassemble.

STEAM TRAP

Each kettle is equipped with a steam trap in the line of the kettle outlet to the drain, to remove line condensate that forms inside the steam jacket. A good steam trap at startup releases air and wet steam into the drain line for a few minutes, then holds the steam jacket. During cooking, the trap periodically releases accumulated condensate. If the kettle's cooking performance becomes inadequate after long use, replacement of the steam trap with a new one may restore kettle operation to peak efficiency.

RE-INSTALLING SPEED CONTROL CABLE

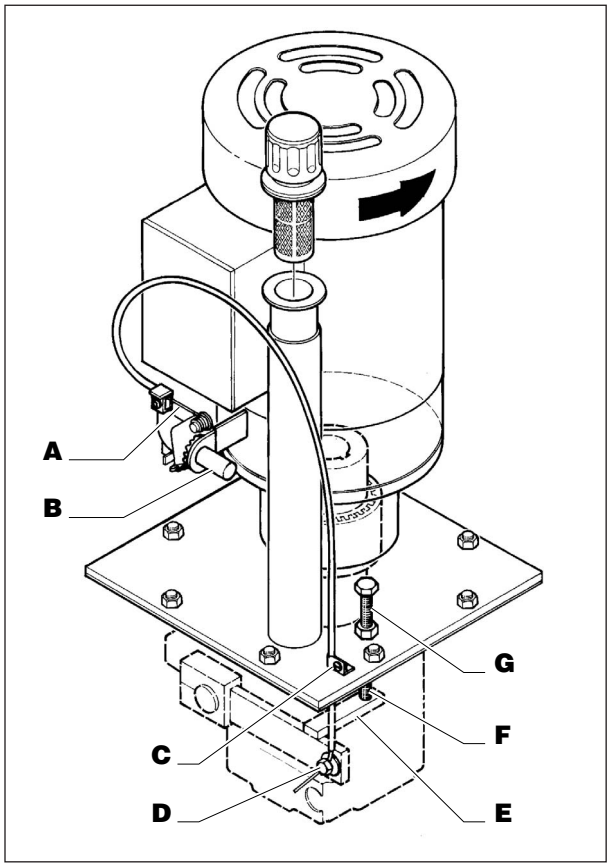

Speed Control Assembly

1. Turn sprocket of speed control so that wire."**A**" is fully extended towards shaft "**B**".
2. Insert end of cable through bracket "**C**".
3. Insert wire so it protrudes approximately 1/2" to 5/8" through hole in bolt "**D**". Tighten bolt and bend end of wire.
4. Bring pump arm "**E**" up until it hits stop bolt "**F**" and tighten screw "**C**".
5. Reassemble unit. Speed control knob will go on pointing toward minimum setting.
6. Turn mixer on with speed control set at minimum setting.
7. If scraper arm is turning, loosen nut "**G**" and back stop bolt "**F**" off a few turns. Next loosen screw "**C**" and slowly pull up cable until scraper arm stops turning. Retighten screw "**C**". Gently turn stop bolt "**F**" down until it hits arm. Lock in place by tightening nut "**G**".
8. Scraper arm should now go from no rotation to fast rotation by turning speed control knob.

NOTE: Mixer may run rough and noisy for one or two hours if air has become trapped in the line.

HYDRAULIC OIL REPLACEMENT PROCEDURE

One of the most important maintenance tasks is to change the hydraulic oil yearly. Under heavy usage the oil should be changed every nine months. It is important to change the oil regularly to prevent its breakdown which leads to the damaging of components.

The oil filter should be changed at the same time as the hydraulic oil. A clean filter prevents particles from damaging the other components in the system.

Replace the hydraulic fluid as follows:

⇒ Disconnect power to unit.

⇒ Remover the front top panel on the main console.

⇒ Remove chrome vent cap from breather pipe located beside electric motor.

⇒ Remove plug bolt from bottom left front corner of main console to drain oil into your catch pail.

⇒ Remove oil filter.

⇒ Replace plug bolt.

⇒ Refill unit through breather pipe using approximately 12 U.S. gallons of Tellus 32 hydraulic oil (oil should be 6 1/2" deep in tank).

⇒ Install new oil filter (Part# SE50094).

⇒ Replace chrome vent cap and front top panel.

⇒ Reconnect power to unit.

⇒ Run unit to remove any air in the lines.

NOTE: Mixer may run rough and noisy for one or two hours if air has become trapped in the line.

LUBRICATION

Lubricate the following parts every three months to insure smooth operation and reduce wear.

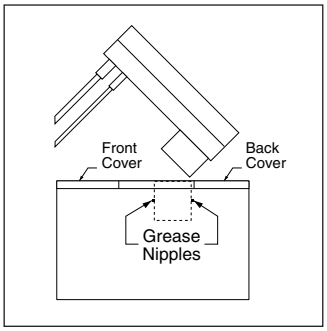

Side View of 18" Console

MIXER BRIDGE HOUSING

There are two grease nipples on the mixer bridge swivel housing which are accessed by removing the front and back covers on the 18" console.

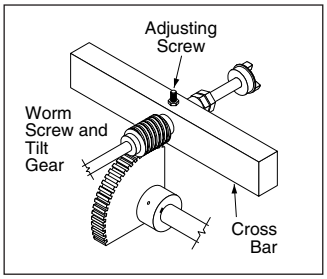

Trunnion and Tilt Mechanism Drawing

TRUNNION HOUSING, WORM SCREW AND TILT GEAR

These parts are accessed through the front cover on the 18" console.

Apply grease to gear teeth. Check for excessive play and adjust with adjusting screw located on top of cross bar.

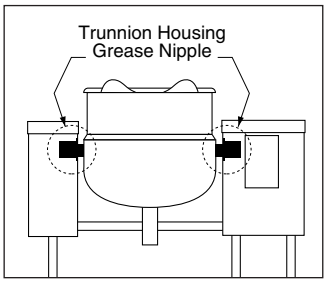

Kettle Trunnion Drawing

KETTLE TRUNNIONS

Accessed via the top covers on the 10" and 18" consoles. Each has two grease nipples.

DISASSEMBLY OF SWITCH ASSEMBLY

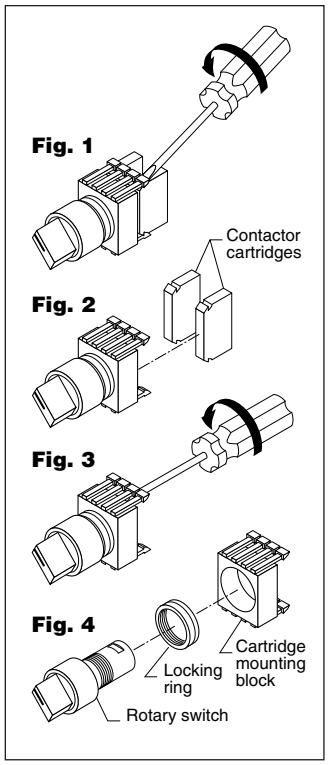

Switch Assembly

1. Place slotted screwdriver between contactor cartridge and cartridge mounting block as shown in **Fig.1**.

2. Twist screwdriver to free cartridge.

3. Place screwdriver under tab in the back of the cartridge mounting block as shown in **Fig. 3**.

4. Twist screwdriver to remove block from the rotary switch.

3. Unscrew locking ring to remove rotary switch.

SOLENOID VALVE MAINTENANCE

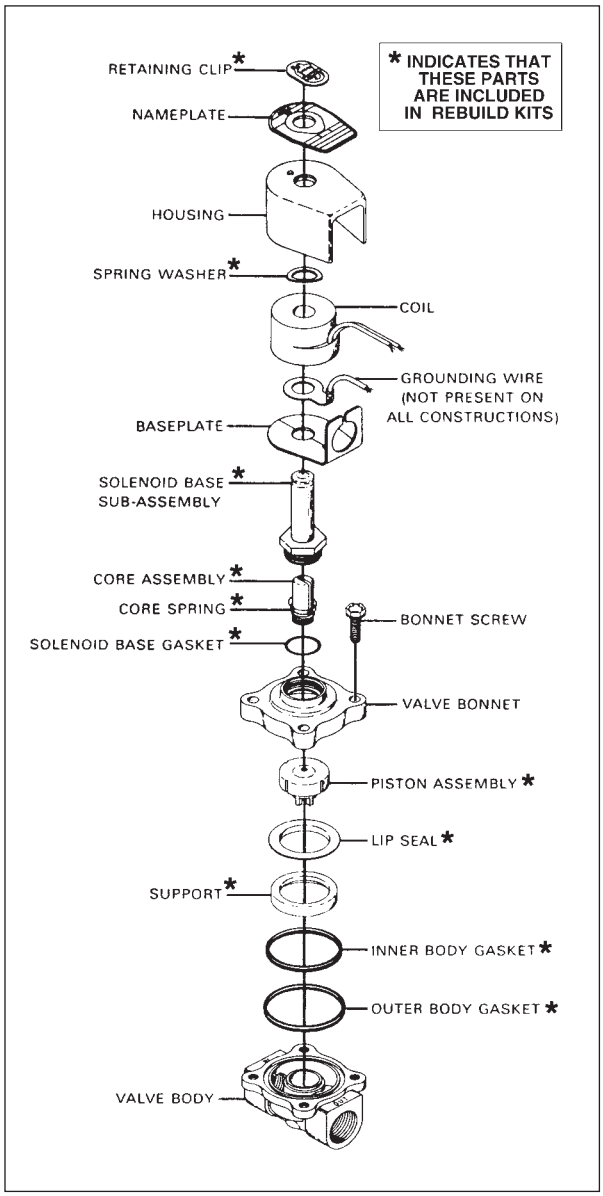

Solenoid Valve Exploded View Drawing

Ordering Information

Parts marked with an asterisk (*) in the Solenoid Valve Exploded View Drawing are supplied in the Rebuild Kits.

Valve# *(Description)*	Rebuild Kit#	Replacement Coil#
KE54834-9 *(2", 120V/60 Hz.)*	SE50400	SE50401
KE54834-6 *(1", 120V/60 Hz.)*	SE50402	SE50401
KE54834-7 *(1", 120V/60 Hz.)*	SE50403	SE50404
KE54834-3 *(3/4", 120V/60 Hz.)*	SE50405	SE50406
KE54834-5 *(3/4", 120V/60 Hz., HW)*	SE50407	SE50401
KE54834-2 *(3/8", 120V/60 Hz.)*	SE50408	SE50404
KE54834-8 *(1 1/4", 120V/60 Hz.)*	SE50409	SE50404
KE54834-4 *(3/4", 120V/60 Hz.)*	SE50410	SE50404

NOTE: It is not necessary to remove the valve from the pipeline for repairs.

WARNING: Turn off electrical power supply and depressurize valve before making repairs.

Cleaning

All solenoid valves should be cleaned periodically. The time between cleanings will vary depending on the medium and service conditions. In general, if the voltage to the coil is correct, sluggish valve operation, excessive noise or leakage will indicate that cleaning is required . Clean valve strainer or filter when cleaning the valve.

Preventive Maintenance

1. Keep the medium flowing through the valve as free from dirt and foreign material as possible.
2. While in service, the valve should be operated at least once a month to insure proper opening and closing.
3. Depending on the medium and service conditions, periodic inspection of internal valve parts for damage or excessive wear is recommended. Thoroughly clean all parts. Replace worn or damaged parts. However, for best results, replace all parts as supplied with a Rebuild Kit.

Causes of Improper Operation

1. *Faulty Control Circuits:* Check the electrical system by energizing the solenoid. A metallic "click" signifies that the solenoid is operating. Absence of the "click" indicates loss of power supply . Check for loose or blown fuses, open circuited or grounded coil, broken lead wires or splice connections.
2. *Burned-Out Coil:* Check for open-circuited coil. Replace coil as necessary. Check supply voltage; it must be the same as specified on nameplate.
3. *Low Voltage:* Check voltage across the coil lead. Voltage must be at least 85% of nameplate rating.
4. *Incorrect Pressure:* Check valve pressure. Pressure to valve must be within range specified on nameplate.
5. *Excessive Leakage:* Disassemble valve and clean all parts. If leakage continues, replace all parts as supplied with a Rebuild Kit.

Coil Replacement

WARNING: Turn off electrical power supply.

1. Disconnect coil lead wires and green grounding wire if present.
2. Remove retaining clip, nameplate and housing.

WARNING: When metal retaining clip disengages, it will spring upward.

3. Slip spring washer and coil off the solenoid base subassembly.
4. Coil is now accessible for replacement. Reassemble in reverse order of disassembly. Use Solenoid Valve Exploded View Drawing for identification and placement of parts.

CAUTION: Solenoid must be fully reassembled because the housing and internal parts complete the magnetic circuit.

Valve Disassembly

WARNING: Depressurize valve and turn off electrical power supply.

1. Disassemble valve in an orderly fashion. Use exploded view for identification and placement of parts.
2. If necessary, disconnect coil lead wires, grounding wire (if present), and rigid conduit from solenoid housing,
3. Remove retaining clip and slip the entire solenoid enclosure off the solenoid base sub-assembly.

WARNING: When metal retaining clip disengages, it will spring upward,

4. Unscrew solenoid base sub-assembly and remove core assembly, core spring, and solenoid base gasket.
5. Remove bonnet screws, valve bonnet, piston assembly, lip seal, support, inner and outer body gaskets.
6. All parts are now accessible to clean or replace; Replace worn or damaged parts. However, for best results, replace all parts as supplied with an Rebuild Kit.

Valve Reassembly

1. Reassemble in reverse order of disassembly. Use exploded view for identification and placement of parts.
2. Lubricate all gaskets with DOW CORNING 111® Compound lubricant or an equivalent high-grade silicone grease.
3. Position support and inner and outer body gaskets in valve body.
4. Position lip seal, flanged end up, onto piston assembly. Install piston assembly with lip seal into support in valve body cavity.
5. Replace valve bonnet and bonnet screws. Torque bonnet screws in a crisscross manner to 95 ±10 inch-pounds (10,7 ±1,1 newton-meters).
6. Replace solenoid base gasket, core assembly, and solenoid base sub-assembly. Torque solenoid base sub-assembly to 175 ±25 inch-pounds (19,8 ±2,8 newton-meters).
7. Replace solenoid enclosure and retaining clip.
8. Restore line pressure and electrical power supply to valve.
9. After maintenance is completed, operate the valve a few times to be sure of proper opening and closing.

MRC 7000 ENABLE MODE PROCEDURE (1&2 PEN)

For Cook Chill Direct Steam Mixer Kettles

Reference page #36 in the MRC 7000 Installation, Wiring, Operation Manual, Form 2877, Edition 6, May 1994 update.

To prevent tampering, your programmer comes from the factory with the programming modes turned "***oFF***".

If adjustment is required then the modes must be turned "***ON***" before they are accessible. We recommend that when the adjustments have been completed you turn off the programming modes again.

To turn on the mode required perform the following steps:

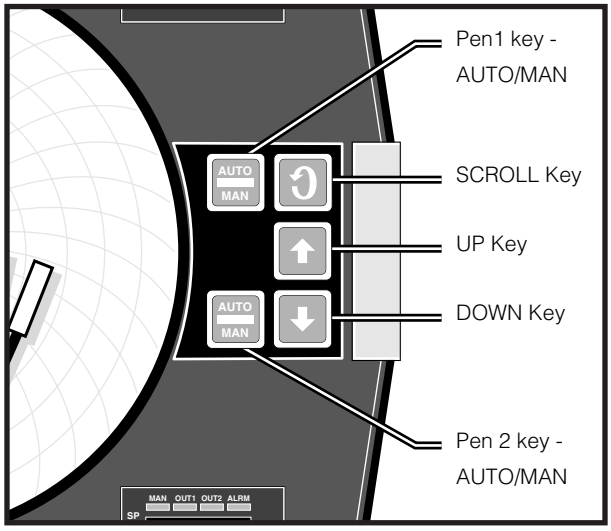

CAL 9900 Controls Drawing

1. Turn MAIN POWER SWITCH to "ON".
2. Press the scroll key "↻" until "***CtrL***" is displayed.
3. Press and hold the "⇧" and "⇩" keys at the same time. All the display lamps will light.
4. After 10 seconds the display lights will go out and "***EnAb***" will be displayed. Release the "⇧" and "⇩" keys. "***EtSt***" will appear.
5. Repeatedly press the "⇩" key until the desired mode is displayed.
6. Press the scroll key "↻" once to display the mode's setting ("***ON***" or "***oFF***").
7. Press the "⇧" key to turn the desired mode "***ON***".
8. To turn desired mode "***oFF***" follow steps 1-5 and then press "⇩" key.

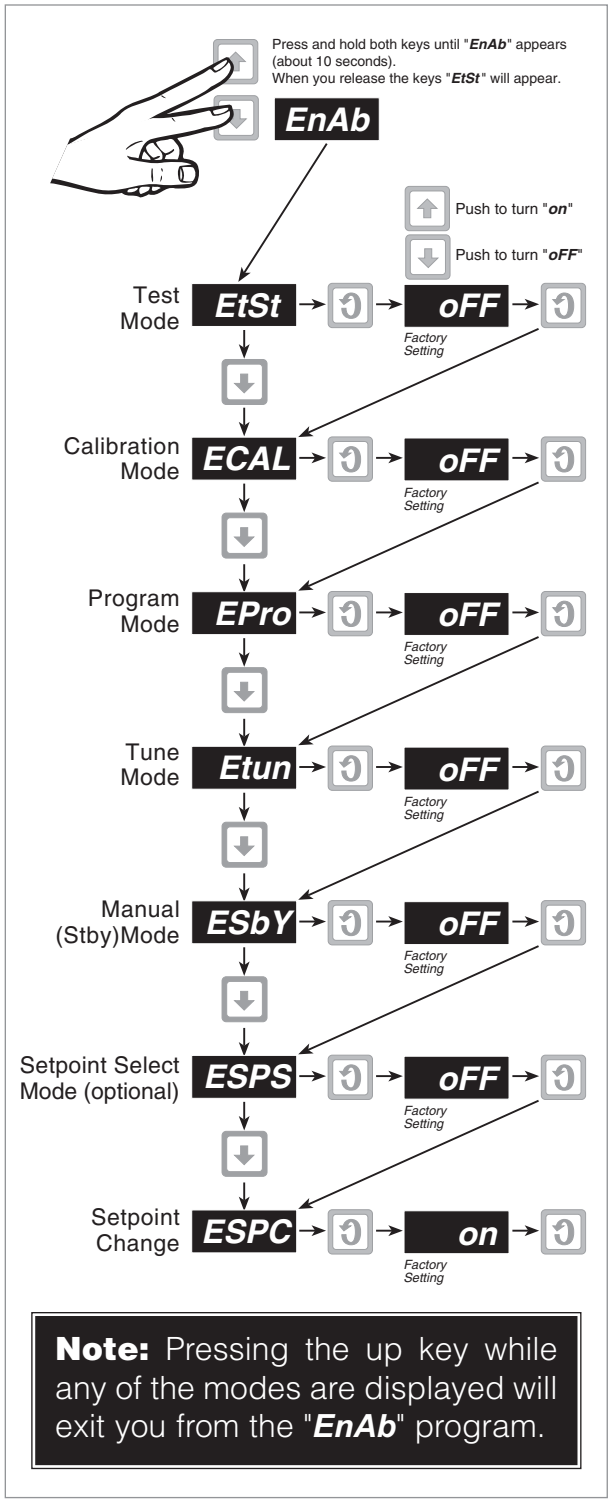

MRC 7000 Enable Mode Flow Chart

WIRING DIAGRAM

SINGLE KETTLES

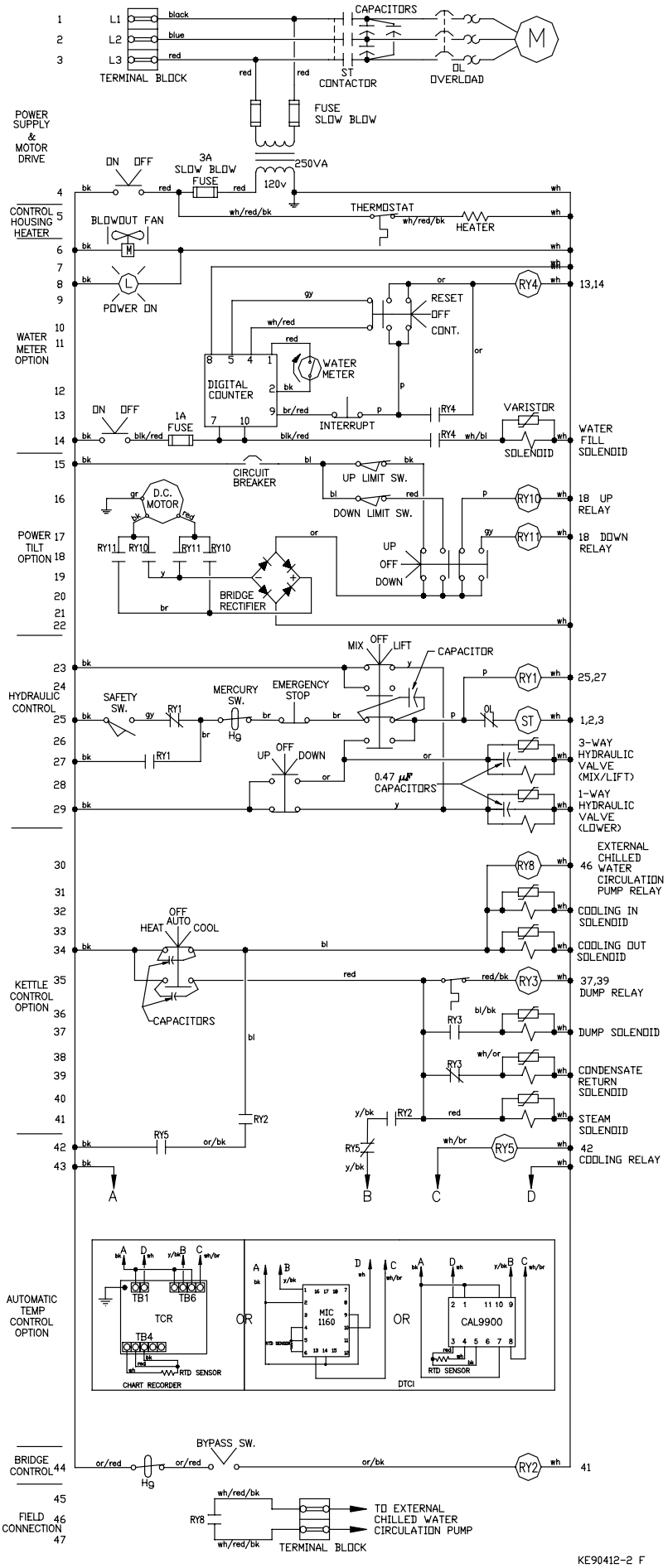

MKDL-T or MKDL-CC C/W ALL THE OPTIONS

WIRING DIAGRAM

TWIN KETTLES

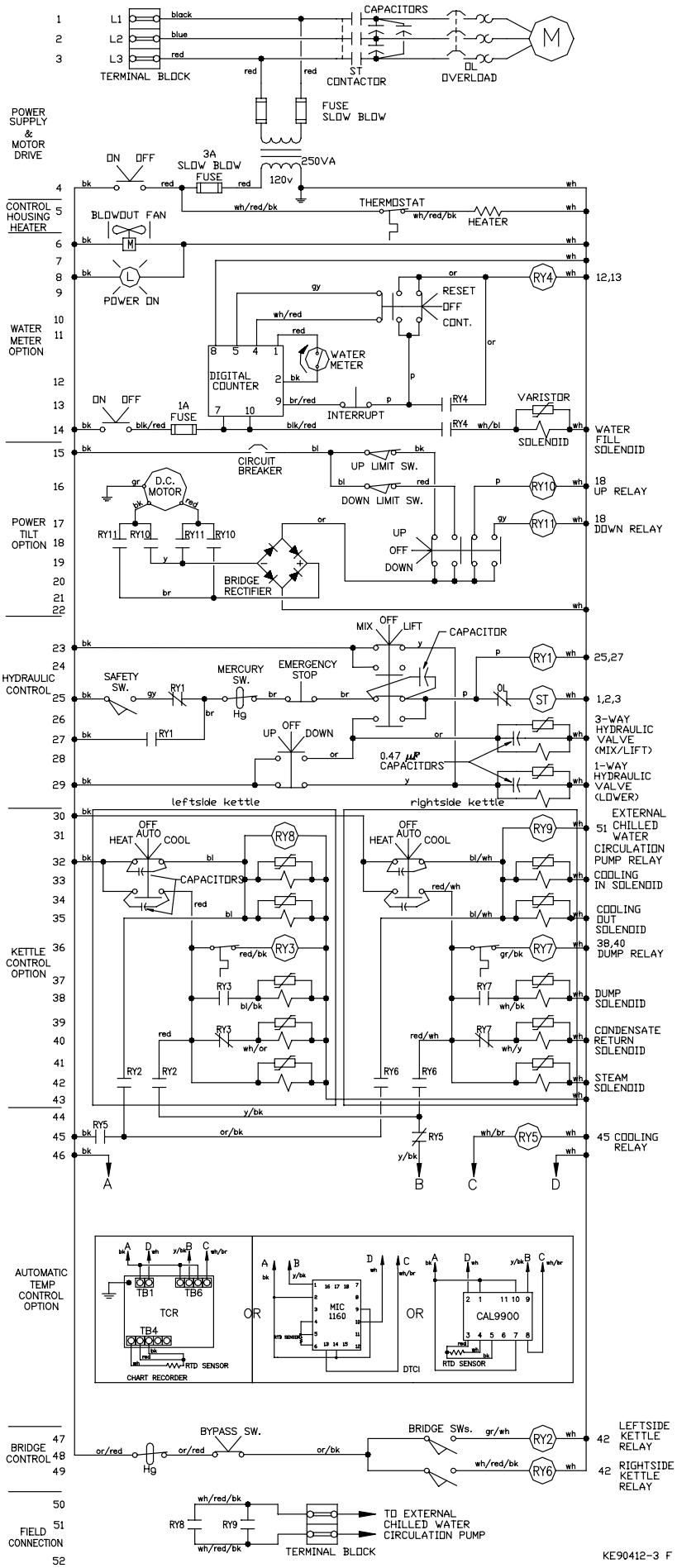

TMKDL-T or TMKDL-CC C/W ALL THE OPTIONS

FLOW PATH FOR HYDRAULIC SYSTEM

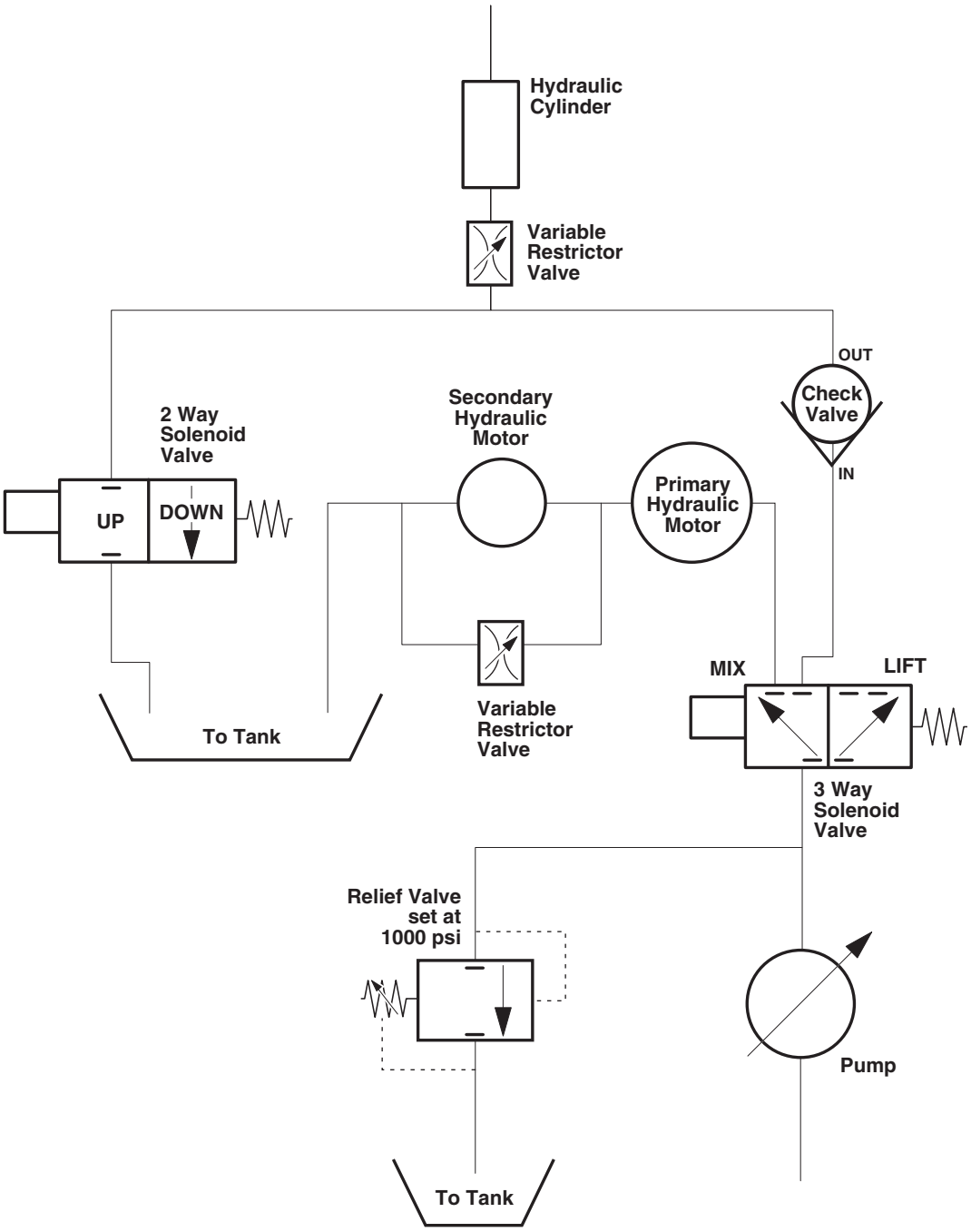

SPARE PARTS LIST

ITEM ON.	DESCRIPTION	QTY. DOMESTIC	QTY. OVERSEAS
	Spare Parts		
SE50426	Air Filter Element	1	1
SE50428	"O" Ring for Air Filter	1	1
KE52895	Air Regulator	---	1
KE52936	Fuse	1	1
KE003209-1	Switch Assembly - On/Off - Maintained	---	1
KE003209-3	Switch Assembly - On/Off/On - Maintained	---	1
KE003209-6	Switch Assembly - Momentary Spring Return	---	1
KE003209-7	Switch Assembly - Momentary Spring Return	---	1
KE02274	Capacitor Assembly	2	2
KE603208-8	Capacitor Cartridge - NC	2	2
KE603208-9	Capacitor Cartridge - NO	2	2
KE50753-10	Relay	2	2
KE00860	Cable and Bracket Assembly - Speed Control	---	1
SE50224	Solenoid Valve Coil	---	1
KE53962	Blade Stop Ring	2	2
KE51834	Scraper Blades	2	2
SE50094	Oil Filter	1	1
KE54834-3	Solenoid Valve, 3/4" - 50 psi.	---	1
KE54834-2	Solenoid Valve, 3/8"	---	1
KE52701	Steam Trap	---	1
UR50077	Thermostat	---	1
KE50579	Circuit Breaker	---	1
FA00012	"O" Ring for Circuit Breaker	1	1
KE50580	Water Resistant Boot for Circuit Breaker	1	1
KE603208-9	Contact Block	---	1
FA00016	"O" Ring for Faucet Spout	2	2
SK50445	Fuse - 3 amps	1	1
SK52936	Fuse - 1 amps	1	1
KE50750-1	Contactor	---	1

FLUSH PISTON VALVE

	Spare Parts		
KE55210	WELD RING, KETTLE BOTTOM OUTLET	1	1
KE55248	BUNA-N O-RING	4	4
KE55250	BUNA-N O-RING	4	4
KE55255	BUNA-N O-RING	4	4

BUTTERFLY VALVE

	Spare Parts		
SE50433	Seat - 2"	---	1
SE50433-1	Seat - 2"	---	1