PRODUCTION TOOLS

BOSCH
Ideas that work.

TOP PERFORMANCE WITH THE LOWEST POSSIBLE ENERGY CONSUMPTION.

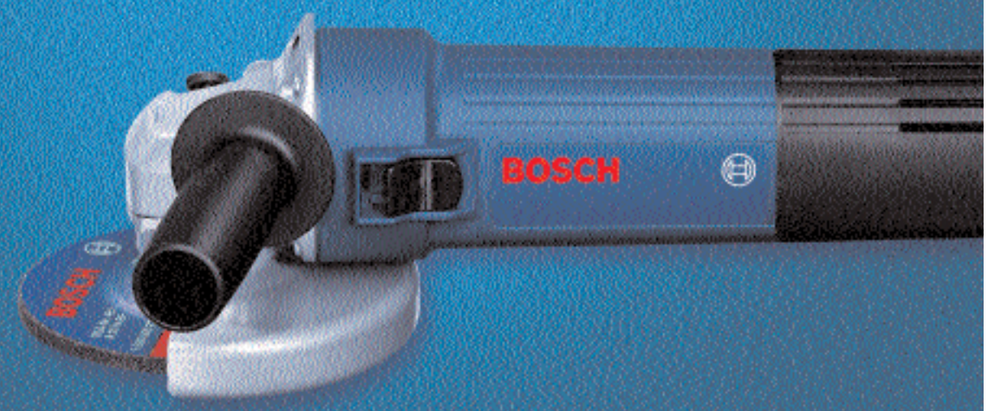

CATALOGUE 2004/2005

HIGH-FREQUENCY POWER TOOLS
FOR INDUSTRY

www.boschproductiontools.com

HIGH-FREQUENCY POWER TOOLS: INEXPENSIVE POWER APPLICATION.

In spite of increasing automation in industrial production, the use of hand-held tools has advantages in many work operations. These tools must fulfil several requirements: robustness, powerful and a long service life, but they must also be easy to manage with high operating comfort.

Better performance through higher frequency

Because their carbon brushes are subject to wear, universal motors of conventional power tools are unable to satisfy these requirements. On the other hand, the brushless asynchronous motor is ideally suited.
The current frequency it is supplied with determines its rotational speed, which, in turn, determines the output that can be achieved. A higher frequency therefore means a higher speed and a higher output.

High power at a constant speed

In continuous operation at 300 Hz, Bosch high-frequency tools have a power output of up to 400 Watts per kg machine weight. In the short term, peak performances of up to 2.5 times this value are possible. The speed remains almost constant – irrespective of whether the tool is being operated at idle or full load.

Unique economy

A further argument in favour of high-frequency tools: their economy. Their efficiency and thus their power consumption means that they have unrivalled economy. Their long service life and low maintenance requirements and power consumption offer an economic solution for every type of application.

Distinct environmental consciousness

Environmental thinking plays a central role in all Bosch products: from the initial development of the idea and energy saving products, to environmentally friendly packaging and disposal.
If a Bosch high-frequency tool is irreparably damaged, Bosch will take back the old tool. They are collected centrally in the service centre and passed on for careful recycling.

Special power saving measures

Bosch is also innovative in the area of power saving and places an emphasis on future-oriented technology: The heat recovery system in the Murrhard plant, for example, produces savings of over half a million litres of heating oil a year.

Information from the Internet

Bosch now offers users and others interested in industrial tools all current product information on the Internet. Here you will find a free online catalogue illustrating in text and pictures all the common cordless, air and high-frequency tools for industrial use. More information on Page 4.

Conformity

All of the air tools listed in this catalogue meet the following standards or norm documents EN 792, EN 50144, in accordance with the regulations of Directives 89/392/EEC.

Certified in accordance with ISO 9001

Certificate no. FM 30078

All weight data in this catalogue corresponds to the EPTA Procedure 01/2003.

CONTENTS.

DRILLS 5-12

GRINDERS 13-44

SCREWDRIVERS AND TAPPERS 45-58

ACCESSORIES 59-62

HIGH-FREQUENCY TECHNOLOGY 63-75

AN OVERVIEW WITH A SINGLE CLICK: ALL INDUSTRIAL TOOLS ONLINE.

Everything the user needs to know can now be found on the Internet: under www.boschproductiontools.com the user has an extensive online catalogue to find which products are available and how they can be applied. The selection of tools is made easier by the possibilities to run comparisons between tools. Users, for example, can display all high-frequency sanders and compare their respective data such as output or rotational speed. Furthermore, they find out the latest news about measurement data, innovations and new developments from the area of Bosch Industrial Tools. Within a short time, this provides users with all the relevant information they need to select the correct production tools.

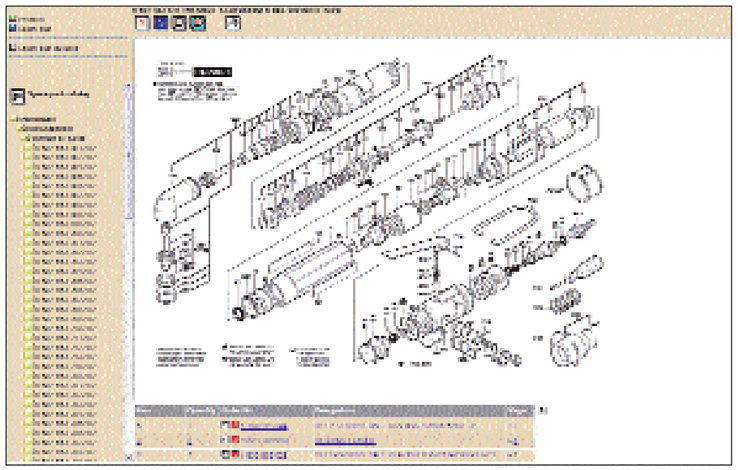

A spare parts service informs users about which spare parts they need – and where they can order them.

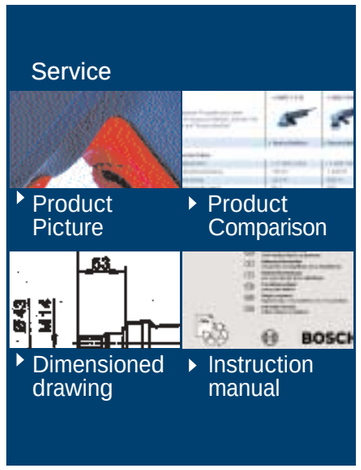

Operating instructions, pictures and exploded drawings can be downloaded directly from the Internet.

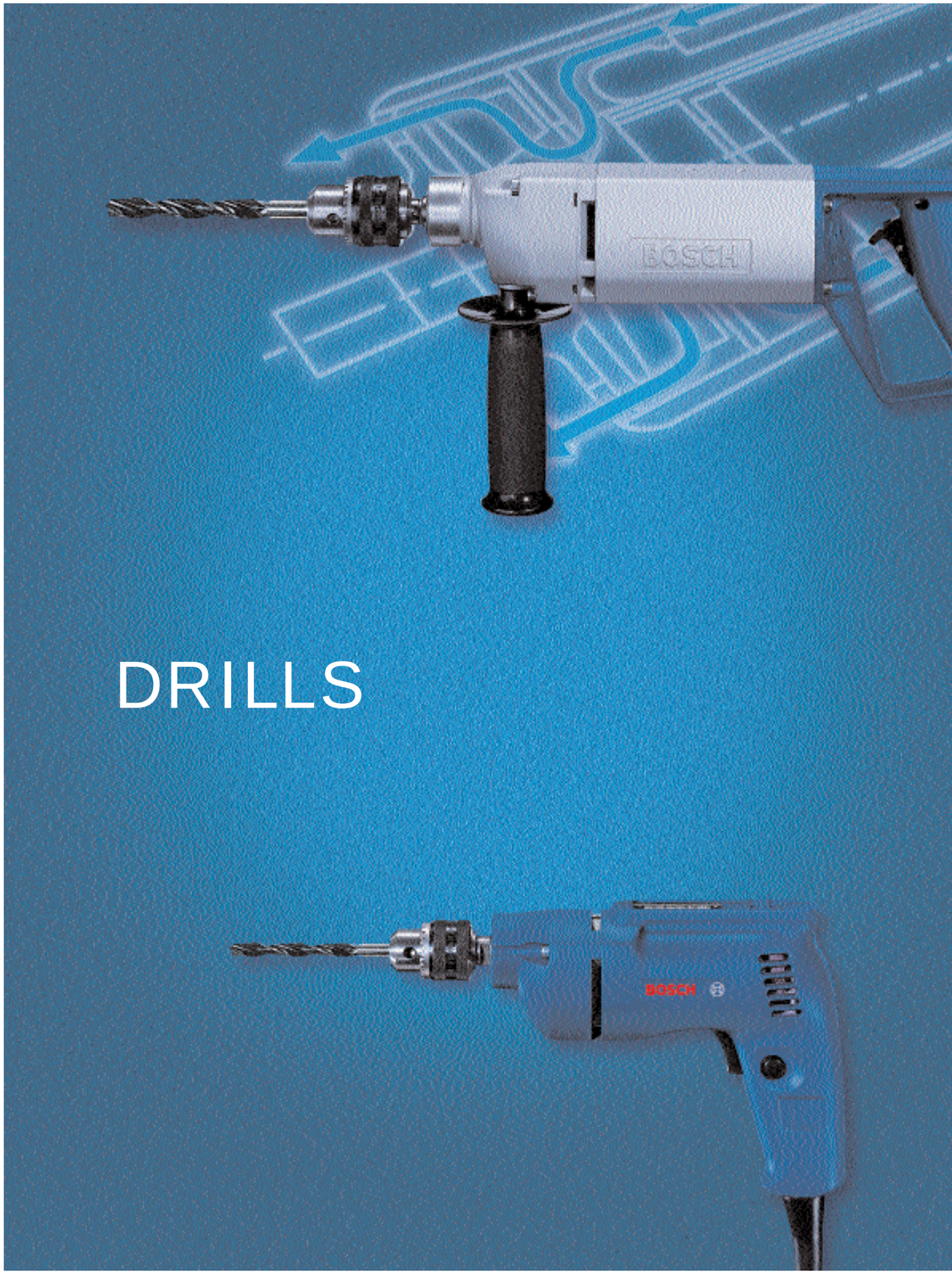

SELECTION GUIDE FOR DRILLS.

Selection of the right drill depends mainly on the following two points:

- drill bit diameter and
- the recommended cutting speed of the material to be processed.

In the table, the preferred bit sizes are assigned to the individual drill types for some common materials. The table shows the drill bit sizes with which the individual types are able to reach the recommended cutting speeds. However, the feed of hand-held tools cannot be increased arbitrarily with increasing bit diameter, since the necessary feed force can no longer be applied. For this reason, the maximum bit diameters for steel and aluminium are allocated to the individual types on page 6. These maximum diameters were determined by tests, unlike the information in the table. In order to achieve a sufficient cutting speed with normal hand pressure, some materials should be predrilled for the following bit diameters:

- steel up to 600 N/mm² as of 8 mm
- steel up to 600 N/mm² as of 6 mm
- cast iron up to 180 N/mm² as of 10 mm
- cast iron up to 300 N/mm² as of 8 mm

Note: If only one bit diameter is specified in the table, it refers to the lower limit of the recommended cutting speed. If nothing is specified, the recommended bit diameter is outside the clamping range of the standard chuck.

	Order number	Speed [rpm]	Frequency
Cutting speed [m/min]:			
	0 602 120 101 / ...104 / ...107	2450	200
	0 602 120 104	3700	300
	0 602 121 101 / ...104 / ...107	1350	200
	0 602 121 104	2000	300
	0 602 131 101 / ...104 / ...107	1350	200
	0 602 131 104	2050	300
	0 602 133 101 / ...104	690	200
	0 602 133 107	1000	200
	0 602 133 104	1030	300
	0 602 134 101	3300	200
	0 602 135 001 / ...004	1600	200
		2400	200
	0 602 135 101 / ...104	900	200
		1500	200
	0 602 135 104	1500	300
		2200	300
	0 602 117 001 / ...004 / ...008	510	200
	0 602 117 004	760	300
	0 602 119 001 / ...004 / ...008	216	200
		512	200
	0 602 119 004	328	300
		775	300

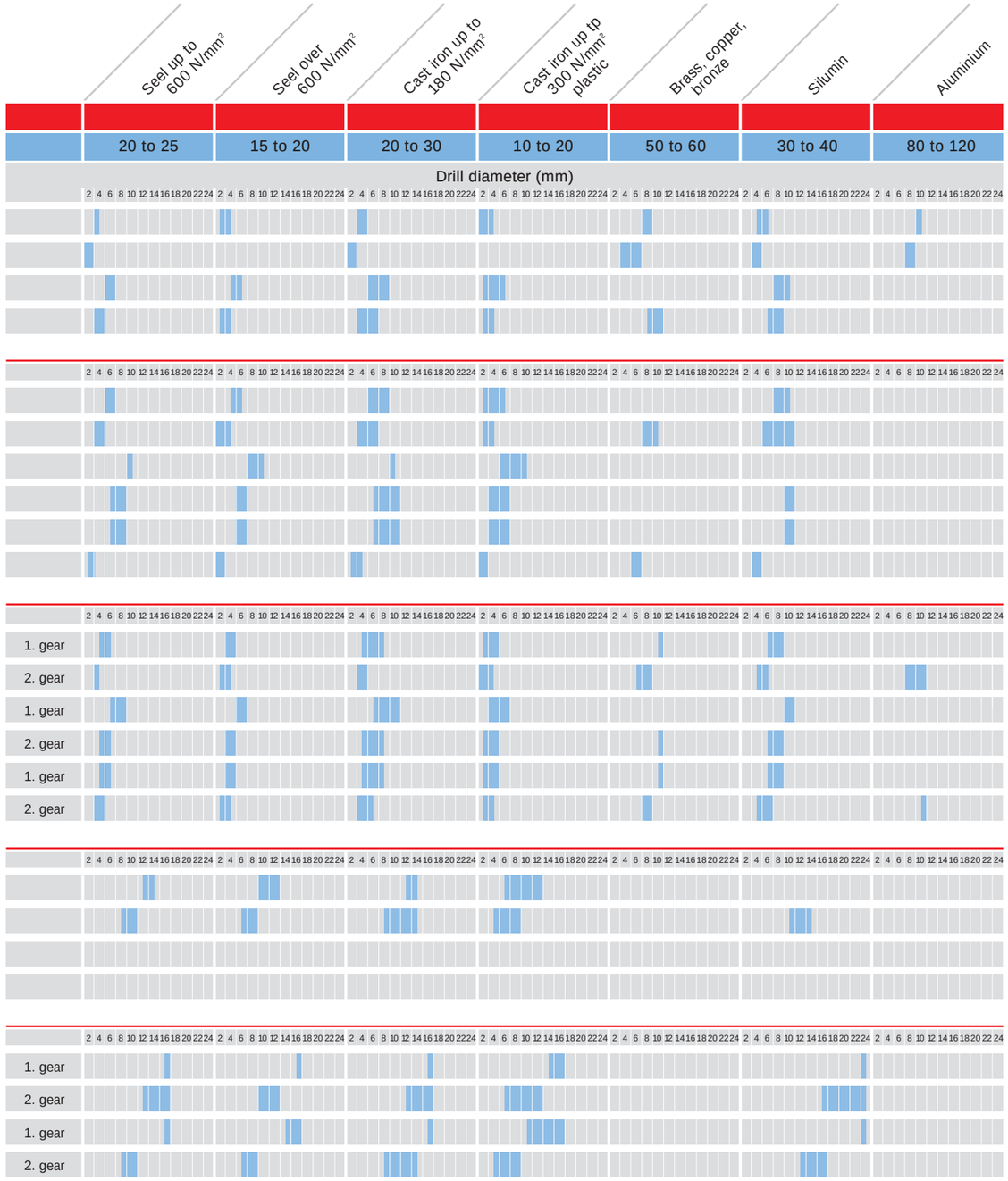

DRILLS.

- The suitable drills for a very wide variety of materials
- Drill at constant speed for optimised operational life
- Motors with extremely long service lives for economical work

	Order number	Voltage (V)	Frequecy (Hz)	Max. bit-Ø in steel (mm)	Max. bit-Ø in aluminium (mm)	Idling speed (min⁻¹)	Nominal power consumption (W)	Nominal power output (W)	Nominal current (A)	Weight withouth calbe (kg)	Output drive tool-holding fixture	Motor size (mm)	Speed settings	Remarks	Accessories supplied	Accessory order number
HBM 55/1	0 602 120 101	265	200	3	7	2450	260	150	0.9	1.7	1/2″-20 UNF	55	1	1-speed drill with three-jaw chuck	Chuck with key Clamping range 1–10 mm	3 608 571 001
	0 602 120 104	135	200	3	7	2450	260	150	1.7	1.7	1/2″-20 UNF	55	1			
	0 602 120 107	72	200	3	7	2450	260	150	3.2	1.7	1/2″-20 UNF	55	1			
	0 602 120 104	200	300	2	7	3700	400	230	1.7	1.7	1/2″-20 UNF	55	1			
	0 602 121 101	265	200	6	9	1350	260	140	0.9	1.7	1/2″-20 UNF	55	1			
	0 602 121 104	135	200	6	9	1350	260	140	1.7	1.7	1/2″-20 UNF	55	1			
	0 602 121 107	72	200	6	9	1350	260	140	3.2	1.7	1/2″-20 UNF	55	1			
	0 602 121 104	200	300	4	9	2000	400	230	1.7	1.7	1/2″-20 UNF	55	1			
HBM 57/1	0 602 131 101	265	200	6	10	1350	470	310	1.6	2.0	1/2″-20 UNF	57	1	1-speed drill with three-jaw chuck	Chuck with key Clamping range 1–10 mm	3 608 571 001
	0 602 131 104	135	200	6	10	1350	470	310	3.3	2.0	1/2″-20 UNF	57	1			
	0 602 131 107	72	200	6	10	1350	470	310	6.1	2.0	1/2″-20 UNF	57	1			
	0 602 131 104	200	300	4	10	2050	600	400	3.3	2.0	1/2″-20 UNF	57	1			
	0 602 133 101	265	200	9	10	690	470	310	1.6	2.0	1/2″-20 UNF	57	1			
	0 602 133 104	135	200	9	10	690	470	310	3.3	2.0	1/2″-20 UNF	57	1			
	0 602 133 107	72	200	8	10	1000	400	310	6.1	2.0	1/2″-20 UNF	57	1			
	0 602 133 104	200	300	8	10	1030	700	460	3.3	2.0	1/2″-20 UNF	57	1			
	0 602 134 101	265	200	2	6	3300	400	270	1.6	2.0	M 13 x 1	57	1	1-speed drill with keyless chuck		3 608 571 004
HBM 57/2	0 602 135 001	265	200	5/3	10/8	1600/2400	400	270	1.6	2.0	1/2″-20 UNF	57	2	2-speed drill with three-jaw chuck	Chuck with key Clamping range 1–10 mm	3 608 571 001
	0 602 135 004	135	200	5/3	10/8	1600/2400	400	270	3.3	2.0	1/2″-20 UNF	57	2			
	0 602 135 101	265	200	8/5	10/8	900/1500	400	270	1.6	2.0	1/2″-20 UNF	57	2			
	0 602 135 104	135	200	8/5	10/8	900/1500	400	270	3.3	2.0	1/2″-20 UNF	57	2			
	0 602 135 104	200	300	5/4	10/8	1500/2200	600	400	3.3	2.0	1/2″-20 UNF	57	2			
HBM 65/1	0 602 117 001	265	200	13	13	510	600	440	1.6	2.8	Taper B 16	65	1	1-speed drill with speed handle. Three-jaw chuck can be ordered as a special accessory.	Chuck Clamping range 1.5–13 mm Additional handle	1 608 571 027 1 602 025 022
	0 602 117 004	135	200	13	13	510	600	440	3.3	2.8	Taper B 16	65	1			
	0 602 117 008	72	200	13	13	510	600	440	5.9	2.8	Taper B 16	65	1			
	0 602 117 004	200	300	10	13	760	900	630	3.3	2.8	Taper B 16	65	1			
HBM 77/2	0 602 119 001	265	200	16/12	23	216/512	950	700	2.8	5.6	Morse Taper 2	77	2	2-speed drill with cross handle. Without chuck. Suitable for bits with. morse taper 2. Three-jaw chuck can be ordered as a special accessory.	Tubular handlef (M 27 x 2) Drill drift	1 600 763 010 3 601 030 002
	0 602 119 004	135	200	16/12	23	216/512	950	700	5.5	5.6	Morse Taper 2	77	2			
	0 602 119 008	72	200	16/12	23	216/512	950	700	10.0	5.6	Morse Taper2	77	2			
	0 602 119 004	200	300	16/18	23	328/775	1450	1050	5.5	5.6	Morse Taper 2	77	2			

The machines come equipped with a special 4-m-long cable without plug.

Your specialist dealer can provide you with information on the complete set of quality accessories.

RECOMMENDED SPEEDS FOR HSS TWIST DRILL BITS.

Up to drill-ø (mm)	Steel uo tp 600 N/mm²	Seel over 600 N/mm²	Cast iron up to 180 N/mm²	Cast iron uo tp 300 N/mm²	Brass, copper, bronze	Silumin	Aluminium
Cutting speed (m/min):	20 to 25	15 to 20	20 to 35	10 to 20	50 to 60	30 to 40	80 to 120
4	2380	1600	2200	1200	4400	2800	8000
5	1900	1270	1800	950	3500	2200	6400
6	1600	1060	1500	800	2900	1850	5300
7	1360	910	1300	680	2500	1600	4550
8	1200	800	1100	600	2200	1400	4000
9	1060	700	1000	530	1900	1200	3540
10	950	640	890	480	1700	1100	3200
11	860	580	810	430	1600	1000	2900
12	800	530	740	400	1500	930	2660
13	730	490	680	370	1350	860	2450
14	680	450	640	340	1250	800	2270
15	630	420	600	320	1150	740	2120
16	600	400	560	300	1100	700	2000
17	560	380	520	280	1050	660	1870
18	530	350	500	260	1000	620	1770
19	500	330	470	250	950	590	1680
20	480	320	450	240	900	560	1600
23	410	280	390	210	760	480	1380
30	310	210	300	160	580	370	1060

ACCESSORIES FOR DRILLS.

	Order number	Packing unit
Morse taper MK2 on B 16 for using drill chucks with clamping diameters up to 16 mm, B16.	1 603 115 002	1

Please consult your stockist for information on the complete range of quality accessories.

DIMENSIONAL DRAWINGS: DRILLS.

Size in mm

	Order number
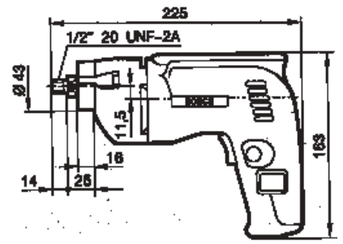	0 602 120 101
	0 602 120 104
	0 602 120 107
	0 602 121 101
	0 602 121 104
	0 602 121 107
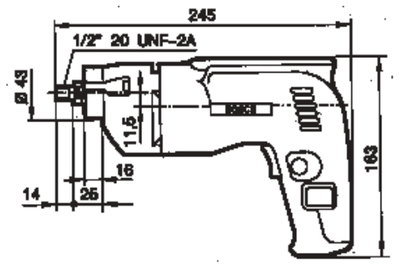	0 602 131 101
	0 602 131 104
	0 602 131 107
	0 602 133 101
	0 602 133 104
	0 602 133 107
	0 602 134 101
	0 602 135 001
	0 602 135 004
	0 602 135 101
	0 602 135 104
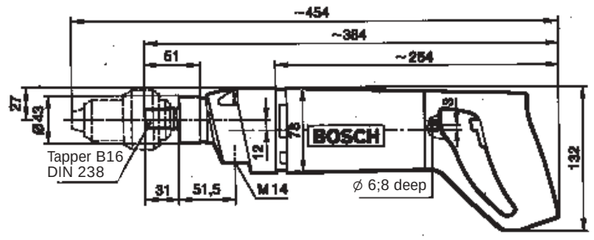	0 602 117 001
	0 602 117 004
	0 602 117 008
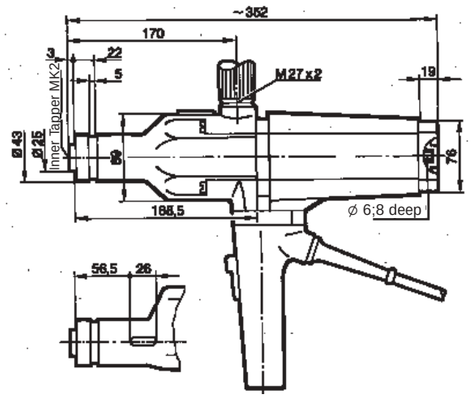	0 602 119 001
	0 602 119 004
	0 602 119 008

GRINDERS

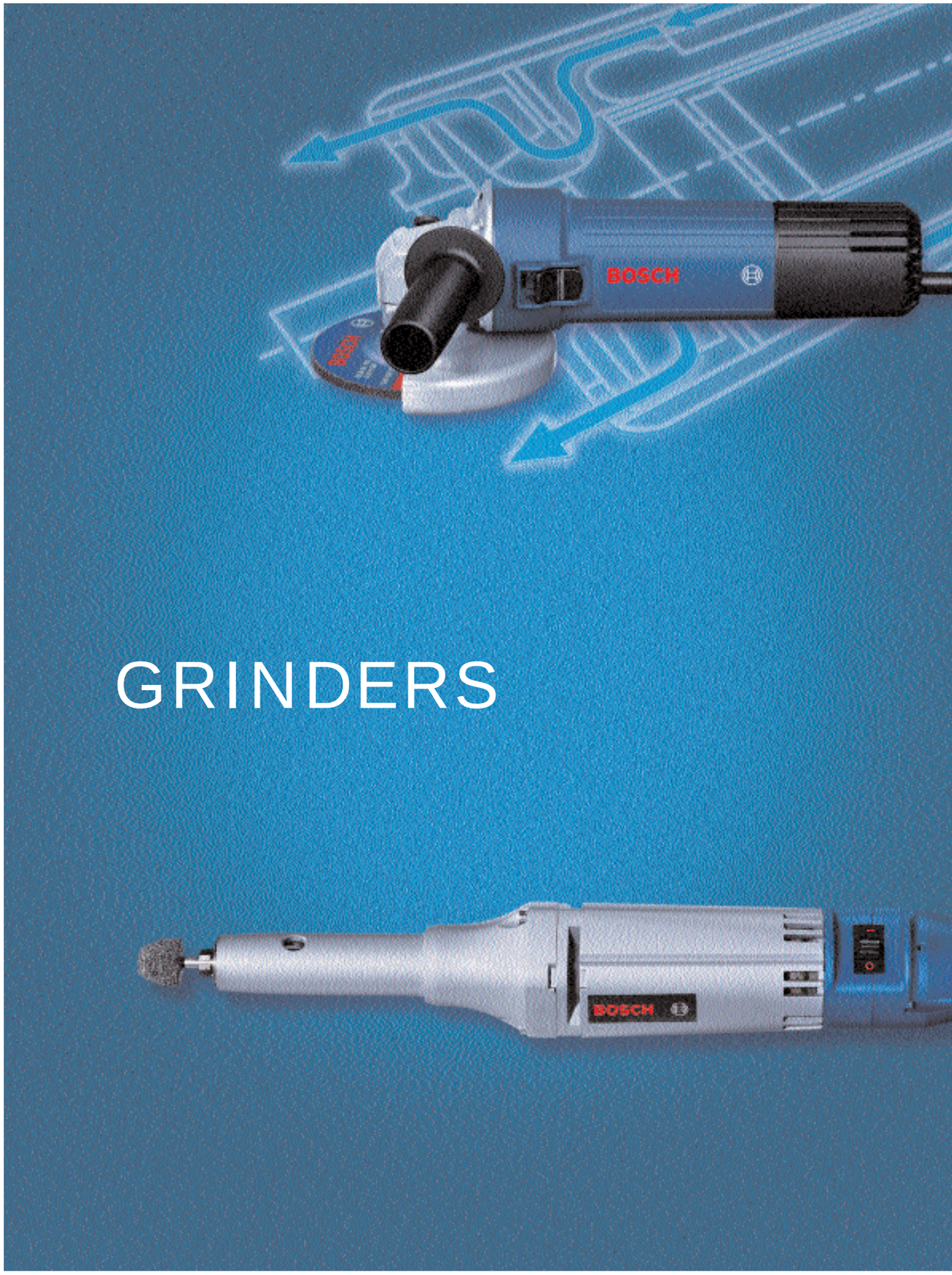

SELECTION GUIDE FOR GRINDERS.

In order to select the correct grinding machine, you must take the area of application and specific circumstances into consideration. That is to say, selection of a grinding point predetermines selection of the suitable grinder. In both tables – one for straight grinders and one for angle grinders – the machines have been ordered to the grinding tasks or grinding points for which they are appropriate. The more powerful the machine, the larger the amount of material that is removed. Because of the great variety in individual working conditions and spatial considerations, these recommendations can, however, only serve as guidelines. In any case, when selecting a grinder, you should take other product features into consideration in addition to performance.

- optimally suited for this application
- well suited for this application
- suited for this for this application

Please observe manufacturer's information regarding grinding material.

	Order number	Idle speed (rpm)	With grinding points	With fan-shaped abrasives	With grinding points	With tapered grinding wheels	With straight grinding wheels	With tapered grinding wheels
			Form grinding and deburring		Interior processing		Coarse grinding	
	0 602 225 1... / 2...	50 000						
	0 602 233 2... / 3...	50 000						
	0 602 226 2...	30 500						
	0 602 227 2...	29 000						
	0 602 228 2... / 3...	12 000						
	0 602 228 2... / 3...	18 000						
	0 602 229 1...	12 000						
	0 602 229 1...	18 000						
	0 602 238 1...	12 000						
	0 602 238 1...	18 000						
	0 602 207 0...	23 400						
	0 602 208 0...	18 300						
	0 602 208 0...	27 400						
	0 602 209 1...	12 000						
	0 602 209 1...	18 000						
	0 602 210 0...	3 100						
	0 602 210 0...	4 700						
	0 602 211 0...	12 000						
	0 602 211 0...	18 000						
	0 602 245 0...	18 000						
	0 602 211 1...	12 000						
	0 602 211 1...	18 000						
	0 602 243 1...	10 700						
	0 602 212 1...	9 000						
	0 602 242 1...	8 600						
	0 602 242 1...	6 800						
	0 602 242 4...	6 800						
	0 602 213 1...	6 800						
	0 602 240 1...	5 700						
	0 602 240 0...	10 200						
	0 602 239 1...	4 800						

SELECTION GUIDE FOR GRINDERS, DISC AND RANDOM ORBIT SANDERS.

	Order number	Idle speed (rpm)	With grinding wheels	With cutting wheels	With fibre wheels	With fan-shaped wheels	With lamb skin covers	With grinding stone	With cup brushes
			Coarse grinding		Coarse polishing (sanding)		Polishing	Wet grinding	Brushing
	0 602 234 3...	4800							
	0 602 234 3...	5 800							
	0 602 234 3...	7 300							
	0 602 301 2...	4 100							
	0 602 301 2...	6 150							
	0 602 327 0...	2 550							
	0 602 326 2...	9 000							
	0 602 305 0...	1 750							
	0 602 305 0...	1 750							
	0 602 306 0...	1 650							
	0 602 304 0...	5 700							
	0 602 304 0...	8 600							
	0 602 329 0...	8 500							
	0 602 331 0...	8 500							
	0 602 332 0...	6 600							
	0 602 331 0...	6 600							
	0 602 334 1...	6 600							
	0 602 335 0...	4 700							
	0 602 335 0...	5 100							
	0 602 373 0...	3 600							
	0 602 373 0...	5 400							
	0 602 370 1...	6 000							
	0 602 370 3...	5 800							
	0 602 370 3...	7 300							

STRAIGHT GRINDERS.

- The optimised straight grinders in all power classes for the widest possible variety of applications
- The ideal structural shape for ergonomic work
- Constant speed, even at extremely high loads
- Efficient work with longest possible service life
- Robust motors with long service lives and low maintenance costs
- Extremely favourable weight-performance ratio

for grinding points 8 to 50 mm in diameter

	Order number	Voltage (V)	Frequency (Hz)	Admissible grinding point-Ø (mm)	No load speed (rpm)	Nominal power consumption (W)	Nominal power Output (W)	Nominal current (A)	Weight without cabel (kg)	Toolholding fixture Collet chuck (mm)	Switch type	Remarks	Comes complete with	Accessory Part number
HGS 44/8	0 602 225 101	265	200	8	50 000	80	40	0.2	0.7	3	Slide switch	Bar handle, offset output drive	Collet chuck 3 mm	2 608 570 019
	0 602 225 104	135	200	8	50 000	80	40	0.5	0.7	3			Open-ended spanner SW 9	1 907 950 503
	0 602 225 107	72	200	8	50 000	80	40	0.9	0.7	3			Open-ended spanner SW 11	1 907 950 505
													Auxiliary handle	3 602 025 002
	0 602 225 204	200	300	8	50 000	125	65	0.5	0.7	3				
	0 602 225 211	72	300	8	50 000	125	65	1.4	0.7	3				
HGS 55/8	0 602 233 201	265	200	8	50 000	260	150	0.9	1.7	3	Slide switch	Bar handle, offset output drive	Collet chuck 3 mm	2 608 570 019
	0 602 233 204	135	200	8	50 000	260	150	1.7	1.7	3			Open-ended spanner SW 9	1 907 950 503
	0 602 233 207	72	200	8	50 000	260	150	3.2	1.7	3			Open-ended spanner SW 11	1 907 950 505
													Auxiliary handle	3 602 025 002
	0 602 233 304	200	300	8	50 000	400	230	1.7	1.7	3				
HGS 55/25	0 602 226 201	265	200	25	30 500	260	150	0.9	1.6	6	Slide switch	Bar handle, offset output drive	Collet chuck 6 mm	2 608 570 079
	0 602 226 204	135	200	25	30 500	260	150	1.7	1.6	6			2 open-ended spanner SW 17	2 607 950 511
	0 602 226 207	72	200	25	30 500	260	150	3.2	1.6	6				
	0 602 227 204	200	300	25	29 000	400	230	1.7	1.6	6				
	0 602 227 211	72	300	25	29 000	400	230	4.6	1.6	6				
HGS 55/50	0 602 228 201	265	200	50	12 000	260	150	0.9	1.6	6	Slide switch	Bar handle, central output drive	Collet chuck 6 mm	2 608 570 079
	0 602 228 204	135	200	50	12 000	260	150	1.7	1.6	6			open-ended spanner SW 17	2 607 950 511
	0 602 228 207	72	200	50	12 000	260	150	3.2	1.6	6				
	0 602 228 204	200	300	50	18 000	400	230	1.7	1.6	6				
	0 602 228 211	72	300	50	18 000	400	230	4.6	1.6	6				
HGS 55/50	0 602 229 101	265	200	50	12 000	260	150	0.9	1.3	6	Slide switch	Bar handle, central output drive, short spindle for tight spaces	Collet chuck 6 mm with nut	2 608 570 079
	0 602 229 104	135	200	50	12 000	260	150	1.7	1.3	6			open-ended spanner SW 17	2 607 950 511
	0 602 229 104	200	300	50	18 000	400	230	1.7	1.3	6				

The machines come equipped with a special 4-m-long cable without plug.

Your specialist dealer can provide you with information on the complete set of quality accessories.

STRAIGHT GRINDERS.

- The optimised straight grinders in all power classes for the widest possible variety of applications
- The ideal structural shape for ergonomic work
- Constant speed, even at extremely high loads
- Efficient work with longest possible service life
- Robust motors with long service lives and low maintenance costs
- Extremely favourable weight-performance ratio

for grinding points 27 to 50 mm in diameter

	Order number	Voltage (V)	Frequency (Hz)	Admissible grinding point-Ø (mm)	No load speed (rpm)	Nominal power consumption (W)	Nominal power Output (W)	Nominal current (A)	Weight without cabel (kg)	Toolholding fixture Collet chuck (mm)	Switch type	Remarks	Comes complete with	Accessory Part number
HGS 55/50	0 602 228 361	265	200	50	12 000	260	150	0.9	1.6	6	ON/OFF switch	Bar handle, central output drive with eccentric clamping	Collet chuck Ø 6 mm Offset screwdriver	1 608 570 025 1 607 950 001
	0 602 228 364	135	200	50	12 000	260	150	1.7	1.6	6				
	0 602 228 364	200	300	50	18 000	400	230	1.7	1.6	6				
HGS 55/50	0 602 228 371	265	200	50	12 000	260	150	0.9	1.6	6	Pressure switch with lock	Pistol handle, with eccentric clamping	Collet chuck Ø 6 mm Offset screwdriver	1 608 570 025 1 607 950 001
	0 602 228 374	135	200	50	12 000	260	150	1.7	1.6	6				
	0 602 228 377	72	200	50	12 000	260	150	3.2	1.6	6				
	0 602 228 374	200	300	40	18 000	400	230	1.7	1.6	6				
HGS 57/50 Ls	0 602 238 101	265	200	50	12 000	400	270	1.6	2.1	6	Pressure switch with lock	Post handle, central output drive Spindle length up to 480 mm optional.	Collet chuck Ø 6 mm Open-ended spanner SW 12 Open-ended spanner SW 15	1 608 570 025 1 907 950 506 1 907 950 509
	0 602 238 104	135	200	50	12 000	400	270	3.3	2.1	6				
	0 602 238 107	72	200	50	12 000	400	270	6.1	2.1	6				
	0 602 238 134	200	300	50	18 000	600	400	3.3	2.1	6				
	0 602 238 111	72	300	50	18 000	600	400	9.2	2.1	6				
HGS 65/32	0 602 207 001	265	200	32	23 400	600	440	1.6	2.4	6	Toggle	Post handle, central output drive	Collet chuck Ø 6 mm Open-ended spanner SW 12 Open-ended spanner SW 15	1 608 570 025 1 907 950 506 1 907 950 509
	0 602 207 004	135	200	32	23 400	600	440	3.3	2.4	6				
	0 602 207 008	72	200	32	23 400	600	440	5.9	2.4	6				
	0 602 208 001	135	200	50	18 300	600	440	3.3	2.4	6				
	0 602 208 001	200	300	27	27 400	900	630	3.3	2.4	6				
HGS 65/50	0 602 209 101	265	200	50	12 000	600	440	1.6	2.5	6	Toggle	Post handle, central output drive	Collet chuck Ø 6 mm Open-ended spanner SW 12 Open-ended spanner SW 15	1 608 570 025 1 907 950 506 1 907 950 509
	0 602 209 104	135	200	50	12 000	600	440	3.3	2.5	6				
	0 602 209 107	72	200	50	12 000	600	440	5.9	2.5	6				
	0 602 209 134	200	300	50	18 000	900	630	3.3	2.5	6				
	0 602 209 111	72	300	50	18 000	900	630	8.8	2.5	6				

The machines come equipped with a special 4-m-long cable without plug.

Your specialist dealer can provide you with information on the complete set of quality accessories.

STRAIGHT GRINDERS.

- The optimised straight grinders in all power classes for the widest possible variety of applications
- The ideal structural shape for ergonomic work
- Constant speed, even at extremely high loads
- Efficient work with longest possible service life
- Robust motors with long service lives and low maintenance costs
- Extremely favourable weight-performance ratio

for grinding points 40 to 50 mm in diameter

	Order number	Voltage (V)	Frequency (Hz)	Admissible grinding point-Ø (mm)	No load speed (rpm)	Nominal power consumption (W)	Nominal power Output (W)	Nominal current (A)	Weight without cabel (kg)	Toolholding fixture Collet chuck (mm)	Switch type	Remarks	Comes complete with	Accessory Part number
HGS 65/50	0 602 210 001	265	200	50	3100	600	440	1.6	2.5	6	Toggle	Post handle, offsett drive for polishing heads with low circumference velocity	Collet chuck Ø 6 mm	1 608 570 025
	0 602 210 004	135	200	50	3100	600	440	3.3	2.5	6			Open-ended spanner SW 12	1 907 950 506
	0 602 210 004	200	300	50	4700	900	630	3.3	2.5	6			Open-ended spanner SW 15	1 907 950 509
HGS 77/50	0 602 211 004	265	200	50	12 000	950	700	2.8	4.3	8	Toggle	Post handle, central output dirve	Collet chuck Ø 8 mm	2 608 570 009
	0 602 211 010	135	200	50	12 000	950	700	5.5	4.3	8			Open-ended spanner SW 14	1 607 950 511
	0 602 211 017	72	200	50	12 000	950	700	10.0	4.3	8			Open-ended spanner SW 22	1 607 950 505
	0 602 211 010	200	300	50	18 000	1450	1050	5.5	4.3	8				
	0 602 211 018	72	300	50	18 000	1450	1050	15.2	4.3	8				
HGS 85/40	0 602 245 034	200	300	40	18 000	1800	1500	6.4	4.7	Spindle M 14	Toggle	Post handle, central output dirve for grinding wheels with internal thread	Open-ended spanner SW 27	3 607 950 004
	0 602 245 011	72	300	40	18 000	1800	1500	17.7	4.7	Spindle M 14	Lever switch with lock			

The machines come equipped with a special 4-m-long cable without plug.

Your specialist dealer can provide you with information on the complete set of quality accessories.

STRAIGHT GRINDERS.

- The optimised straight grinders in all power classes for the widest possible variety of applications
- The ideal structural shape for ergonomic work
- Constant speed, even at extremely high loads
- Efficient work with longest possible service life
- Robust motors with long service lives and low maintenance costs
- Extremely favourable weight-performance ratio

for grinding wheels 50 to 80 mm in diameter

	Order number	Voltage (V)	Frequency (Hz)	Admissible grinding point-Ø (mm)	No load speed (rpm)	Nominal power consumption (W)	Nominal power Output (W)	Nominal current (A)	Weight without cabel (kg)	Toolholding fixture Collet chuck (mm)	Switch type	Remarks	Comes complete with	Accessory Part number
HGS 77/75	0 602 211 101	265	200	75 mm ⌀	12 000	950	700	2.8	4.7	Mounting flanges M 14 for grinding wheels with bore-Ø 20 mm	Toggle	The machine must not be operated without a protective guard.	Open-ended spanner SW 32	3 607 950 005
	0 602 211 107	135	200	45 m/s	12 000	950	700	5.5	4.7				Pin sparrer	3 607 950 006
	0 602 211 116	72	200	circumference	12 000	950	700	10.0	4.7				Protective guard	3 605 510 025
				velocity									Mounting flange	3 605 703 028
													Collet flange	3 605 703 074
	0 602 211 134	200	300	50 mm ⌀	18 000	1450	1050	5.5	4.7	Mounting flanges M 14 for grinding wheels with bore-Ø 20 mm	Lever with lock	The machine must not be operated without a protective guard.	Open-ended spannerSW 32	3 607 950 005
				45 m/s									Pin sparrer	3 607 950 006
				circumference									Protective guard	3 605 510 025
				velocity									Mounting flange	3 605 703 028
													Collet flange	3 605 703 074
HGS 85/80	0 602 243 134	200	300	80 mm ⌀	10 700	1800	1500	6.4	5.4	Mounting flanges M 14 for grinding wheels with bore-Ø 20 mm	Lever with lock	The machine must not be operated without a protective guard.	Open-ended spanner SW 32	3 607 950 005
				45 m/s									Pin sparrer	3 607 950 006
				circumference									Protective guard	3 605 510 025
				velocity									Mounting flange	3 605 703 028
													Collet flange	3 605 703 074
HGS 77/100	0 602 212 101	265	200	100 mm ⌀	9000	950	700	2.8	5.1	Mounting flanges M 14 for grinding wheels with bore-Ø 20 mm	Toggle	The machine must not be operated without a protective guard.	Open-ended spanner SW 32	3 607 950 005
	0 602 212 104	135	200	45 m/s	9000	950	700	5.5	5.1				Pin sparrer	3 607 950 006
	0 602 212 107	72	200	circumference	9000	950	700	10.1	5.1				Protective guard	3 605 510 019
				velocity									Mounting flange	3 605 703 028
													Collet flange	3 605 703 074
HGS 85/100	0 602 242 101	265	200	100 mm ⌀	8600	1200	1000	3.3	5.5	Mounting flanges M 14 for grinding wheels with bore-Ø 20 mm	Lever with lock	The machine must not be operated without a protective guard.	Open-ended spanner SW 32	3 607 950 005
	0 602 242 104	265	200	45 m/s	8600	1200	1000	3.3	5.5				Pin sparrer	3 607 950 006
	0 602 242 107	72	200	circumference	8600	1200	1000	11.8	5.5				Protective guard	3 605 510 019
				velocity									Mounting flange	3 605 703 028
													Collet flange	3 605 703 074
	0 602 242 134	200	300	100 mm ⌀	8600	1800	1500	6.4	5.5	Mounting flanges M 14 for grinding wheels with bore-Ø 20 mm	Lever with lock	The machine must not be operated without a protective guard.	Open-ended spanner SW 32	3 607 950 005
				45 m/s									Pin sparrer	3 607 950 006
				circumference									Protective guard	3 605 510 019
				velocity									Mounting flange	3 605 703 028
													Collet flange	3 605 703 074
	0 602 242 436	200	300	125 mm ⌀	6800	1800	1500	6.4	5.5	Mounting flanges M 14 for grinding wheels with bore-Ø 20 mm	Toggle	The machine must not be operated without a protective guard.	Open-ended spanner SW 32	3 607 950 010
				45 m/s									Pin sparrer	1 607 950 061
				circumference										
				velocity										

The machines come equipped with a special 4-m-long cable without plug.

Your specialist dealer can provide you with information on the complete set of quality accessories.

STRAIGHT GRINDERS.

- The optimised straight grinders in all power classes for the widest possible variety of applications
- The ideal structural shape for ergonomic work
- Constant speed, even at extremely high loads
- Efficient work with longest possible service life
- Robust motors with long service lives and low maintenance costs
- Extremely favourable weight-performance ratio

for grinding wheels 125 to 180 mm in diameter

	Order number	Voltage (V)	Frequency (Hz)	Admissible grinding wheels-⌀ (mm)	No load speed (rpm)	Nominal power consumption (W)	Nominal power Output (W)	Nominal current (A)	Weight without cabel (kg)	Toolholding fixture Collet chuck (mm)	Switch type	Remarks	Comes complete with	Accessory Part number
HGS 77/125	0 602 213 104	200	300	125 mm ⌀	6800	1450	1050	5.5	5.2	Mounting flanges M 14 for grinding wheels with bore-⌀ 20 mm	Toggle	The machine must not be operated without a protective guard.	Open-ended spanner SW 32	3 607 950 010
				45 m/s									Pin spanner	1 607 950 061
				circumference									Protective guard	3 605 510 014
				velocity									Mounting flange	3 605 703 068
													Collet flange	3 605 703 077
HGS 88/150	0 602 240 104	135	200	150 mm ⌀	5700	1950	1500	10.0	7.7	Mounting flanges M 14 for grinding wheels with bore-⌀ 20 mm	Lever with lock	The machine must not be operated without a protective guard.	Open-ended spanner SW 32	3 607 950 010
	0 602 240 107	72	200	45 m/s	5700	1950	1500	18.0	7.7				Pin spanner	1 607 950 061
				circumference									Protective guard	3 605 510 018
				velocity									Mounting flange	3 605 703 068
													Collet flange	3 605 703 077
	0 602 240 134	200	300	150 mm ⌀	5700	2900	2200	10.0	7.7	Mounting flanges M 14 for grinding wheels with bore-⌀ 20 mm	Lever with lock	The machine must not be operated without a protective guard.	Open-ended spanner SW 32	3 607 950 010
				45 m/s									Pin spanner	1 607 950 061
				circumference									Protective guard	3 605 510 018
				velocity									Mounting flange	3 605 703 068
													Collet flange	3 605 703 077
HGS 88/150	0 602 240 034	200	300	150 mm ⌀	10 200	2900	2200	10.0	7.7	Mounting flanges M 14 for grinding wheels with bore-⌀ 20 mm	Lever with lock	The machine must not be operated without a protective guard.	Open-ended spanner SW 32	3 607 950 010
													Pin spanner	1 607 950 061
	0 602 240 035	200	300	80 m/s	10 200	2900	2200	10.0	7.7		Lever without lock		Protective guard	3 605 510 031
				circumference									Mounting flange	3 605 703 068
				velocity									Collet flange	3 605 703 077
HGS 88/180	0 602 239 104	135	200	180 mm ⌀	4800	1950	1500	10.0	7.9	Mounting flanges M 14 for grinding wheels with bore-⌀ 20 mm	Lever with lock	The machine must not be operated without a protective guard.	Open-ended spanner SW 32	3 607 950 010
	0 602 239 107	72	200	45 m/s	4800	1950	1500	18.0	7.9				Pin spanner	1 607 950 061
				circumference									Protective guard	3 605 510 035
				velocity									Mounting flange	3 605 703 068
													Collet flange	3 605 703 077
	0 602 239 134	200	300	180 mm ⌀	4800	2900	2200	10.0	7.9	Mounting flanges M 14 for grinding wheels with bore-⌀ 20 mm	Lever with lock	The machine must not be operated without a protective guard.	Open-ended spanner SW 32	3 607 950 010
				45 m/s									Pin spanner	1 607 950 061
				circumference									Protective guard	3 605 510 035
				velocity									Mounting flange	3 605 703 068
													Collet flange	3 605 703 077

The machines come equipped with a special 4-m-long cable without plug.

Your specialist dealer can provide you with information on the complete set of quality accessories.

ANGLE GRINDERS.

- The correct grinder/sander for every application
- Extremely robust and maintenance-friendly motors
- Constant speeds throughout the whole power range for top economy and longest possible service lives
- Robust angular gear with high operational performance

for grinding wheels 100 to 180 mm in diameter

	Order number	Voltage (V)	Frequency (Hz)	Admissible grinding wheels-ø (mm)	No load speed (rpm)	Nominal power consumption (W)	Nominal power Output (W)	Nominal current (A)	Weight without cabel (kg)	Toolholding fixture chuck (mm)	Switch type	Remarks	Comes complete with	Accessory Part number
HWS 5265/125 	0 602 324 301	265	200	125	4800	520	360	1.6	2.0	Mounting flanges M 14 for grinding wheels with bore-ø 22,3 mm	Slide-switch	For fibre-sanding discs with spindle locking. SDS-clic available as special accessory	Pin-type wrench Auxiliary handle Pin-type wrench Mounting flange	1 607 950 052 1 602 025 031 1 603 345 043 2 605 703 014
	0 602 324 304	135	200	125	4800	520	360	3.2	2.0					
	0 602 324 307	72	200	125	4800	520	360	6.1	2.0					
HWS 5265/125 	0 602 324 341	265	200	125	5800	520	360	1.6	2.2	Mounting flanges M 14 for grinding wheels with bore-ø 22,3 mm	Slide-switch	For light grinding work	Protective guard ø 125 mm Pin-type wrench Auxiliary handle Pin-type wrench Mounting flange	1 605 510 155 1 607 950 052 1 602 025 031 1 603 345 043 2 605 703 014
	0 602 324 344	135	200	125	5800	520	360	3.2	2.2					
	0 602 324 347	72	200	125	5800	520	360	6.1	2.2					
	0 602 324 324	200	300	125	7300	800	550	3.2	2.2			For fan-type discs		
	0 602 324 331	72	300	125	7300	800	550	8.7	2.2					
HWS 65/125 	0 602 301 201	265	200	125	4100	600	440	1.6	3.0	Mounting flanges M 14 for grinding wheels with bore-ø 22,3 mm	Toggle	For fibre-sanding	Open-ended spanner SW 17 Auxiliary handle Pin-type wrench	2 607 950 511 1 602 025 022 1 607 950 052
	0 602 301 204	135	200	125	4100	600	440	3.3	3.0					
	0 602 301 207	72	200	125	4100	600	440	5.9	3.0					
	0 602 301 204	200	300	125	6150	900	630	3.3	3.0					
	0 602 327 001	265	200	100	2550	600	410	1.6	3.0					
HWS 65/125 	0 602 326 104	200	300	125	9000	900	630	3.3	3.2	Mounting flanges M 14 for grinding wheels with bore-ø 22,3 mm	Toggle	For light grinding work	Protective guard ø 125 mm Pin-type wrench Open-ended spanner SW 17 Auxiliary handle Pin-type wrench	1 605 510 155 1 607 950 052 2 607 950 511 1 602 025 022 1 603 345 043
HWS 77/100 for wet grinding 	0 602 305 010	42	200	125	1750	950	700	17.5	4.5	Mounting flanges M 14 for grinding wheels with bore-ø 22,3 mm	Toggle	For wet grinding	Open-ended spanner SW 17 Auxiliary handle Pin-type wrench Mounting flange Pin-type wrench	2 607 950 511 1 602 025 022 1 607 950 061 2 605 703 014 1 603 345 043
HWS 77/175 	0 602 305 001	265	200	175	1750	950	700	2.8	4.4	Mounting flanges M 14 for grinding wheels with bore-ø 22,3 mm	Toggle	For polishing work	Open-ended spanner SW 17 Auxiliary handle	2 607 950 511 1 602 025 022
	0 602 305 004	135	200	175	1750	950	700	5.5	4.4					
	0 602 305 008	72	200	175	1750	950	700	10.0	4.4					
	0 602 306 034	200	300	175	1650	1450	1050	5.5	4.4					
HWS 77/180 	0 602 304 001	265	200	180	5700	950	700	2.8	4.6	Mounting flanges M 14 for grinding wheels with bore-ø 22,3 mm	Toggle	For medium-heavy grinding work	Protective guard ø 180 mm Mounting flange Pin-type wrench Pin-type wrench Open-ended spanner SW 17 Auxiliary handle	1 605 510 176 2 605 703 014 1 603 345 043 1 607 950 061 2 607 950 511 1 602 025 022
	0 602 304 004	135	200	180	5700	950	700	5.5	4.6					
	0 602 304 009	72	200	180	5700	950	700	10.0	4.6					
	0 602 304 034	200	300	180	8600	1450	1050	5.5	4.6					
	0 602 304 010	72	300	180	8600	1450	1050	15.2	4.6					

The machines come equipped with a special 4-m-long cable without plug.

Your specialist dealer can provide you with information on the complete set of quality accessories.

ANGLE GRINDERS.

- The correct grinder/sander for every application
- Extremely robust and maintenance-friendly motors
- Constant speeds throughout the whole power range for top economy and longest possible service lives
- Robust angular gear with high operational performance

for grinding wheels 180 to 230 mm in diameter

	Order number	Voltage (V)	Frequency (Hz)	Admissible grinding wheels-ø (mm)	No load speed (rpm)	Nominal power consumption (W)	Nominal power Output (W)	Nominal current (A)	Weight without cabel (kg)	Toolholding fixture chuck (mm)	Switch type	Remarks	Comes complete with	Accessory Part number
HWS 85/180	0 602 329 001	265	200	180	8500	1200	1000	3.3	5.6	Mounting flanges M 14 for grinding wheels with bore-ø 2,3 mm	Lever with lock	For medium-heavy grinding work. SDS-clic available as special accessory.	Protective guard ∅ 180 mm	1 605 510 176
	0 602 329 004	135	200	180	8500	1200	1000	6.4	5.6				Mounting flange	2 605 703 014
	0 602 329 007	72	200	180	8500	1200	1000	11.8	5.6				Round nut	1 603 345 043
													Pin-type wrench	1 607 950 061
													Open-ended spanner SW 17	2 607 950 511
	0 602 329 034	200	300	180	8500	1800	1500	6.4	5.6				Auxiliary handle	1 602 025 022
	0 602 329 011	72	300	180	8500	1800	1500	17.7	5.6					
	0 602 329 036	200	300	180	8500	1800	1500	6.4	5.6		Toggle			
HWS 88/180	0 602 331 001	265	200	180	8500	1950	1500	5.0	6.5	Mounting flanges M 14 for grinding wheels with bore-ø 2,3 mm	Lever with lock	For medium-heavy grinding work. SDS-clic available as special accessory.	Protective guard ∅ 180 mm	1 605 510 176
	0 602 331 004	135	200	180	8500	1950	1500	10.0	6.5				Mounting flange	2 605 703 014
	0 602 331 007	72	200	180	8500	1950	1500	18.0	6.5				Round nut	1 603 345 043
													Pin-type wrench	1 607 950 061
													Open-ended spanner SW 17	2 607 950 511
	0 602 331 003	265	200	180	8500	1950	1500	5.0	6.5		Toggle		Auxiliary handle	1 602 025 022
	0 602 331 034	200	300	180	8500	2900	2200	10.0	6.5		Lever with lock			
	0 602 331 036	200	300	180	8500	2900	2200	10.0	6.5		Toggle			
HWS 88/230	0 602 332 001	265	200	230	6600	1950	1500	5.0	7.0	Mounting flanges M 14 for grinding wheels with bore-ø 2,3 mm	Lever with lock	For medium-heavy grinding work. SDS-clic available as special accessory.	Protective guard ∅ 180 mm	1 605 510 173
	0 602 332 011	200	300	230	6600	2900	2200	10.0	7.0				Mounting flange	2 605 703 014
	0 602 332 034	200	300	230	6600	2900	2200	10.0	7.0				Round nut	1 603 345 043
													Pin-type wrench	1 607 950 061
													Open-ended spanner SW 17	2 607 950 511
	0 602 332 003	265	200	230	6600	1950	1500	5.0	7.0		Toggle		Auxiliary handle	1 602 025 022
	0 602 332 036	200	300	230	6600	2900	2200	10.0	7.0					
	0 602 332 005	135	200	230	6600	1950	1500	10.0	7.0		Lever with lock			

The machines come equipped with a special 4-m-long cable without plug.

Your specialist dealer can provide you with information on the complete set of quality accessories.

ANGLE GRINDERS

- The correct grinder/sander for every application
- Extremely robust and maintenance-friendly motors
- Constant speeds throughout the whole power range for top economy and longest possible service lives
- Robust angular gear with high operational performance

for grinding wheels 230 to 300 mm in diameter

	Order number	Voltage (V)	Frequency (Hz)	Admissible grinding wheels-ø (mm)	No load speed (rpm)	Nominal power consumption (W)	Nominal power Output (W)	Nominal current (A)	Weight without cabel (kg)	Toolholding fixture chuck (mm)	Switch type	Remarks	Comes complete with	Accessory Part number
HWS 810/230	0 602 334 101	265	200	230	6600	2500	2000	6.7	8.5	Mounting flanges M 14 for grinding wheels with bore-ø 22,3 mm	Lever with lock	For heavy grinding work. SDS-click available as special accessory.	Protective guard ø 230 mm	1 605 510 173
	0 602 334 107	72	200	230	6600	2500	2000	24.7	8.5				Mounting flange	2 605 703 014
													Round nut	1 603 345 043
													Pin-type wrench	1 607 950 061
	0 602 334 134	200	300	230	6600	3800	3100	13.2	8.5		Lever with lock		Open-ended spanner SW 17	2 607 950 511
	0 602 334 136	200	300	230	6600	3800	3100	13.2	8.5		Toggle		Auxiliary handle	1 602 025 022
HWS 810/300	0 602 335 001	265	200	300	4700	2500	2000	6.7	10.0	Mounting flanges M 14 for grinding wheels with bore-ø 22,3 mm	Lever with lock	For cutting work.	Protective guardø 300 mm	1 605 510 212
	0 602 335 004	135	200	300	4700	2500	2000	13.2	10.0				Mounting flange	2 605 703 011
	0 602 335 007	72	200	300	4700	2500	2000	24.7	10.0				Round nut	1 603 345 043
													Mounting flange	2 605 703 022
													Internal hexagon key	1 907 950 007
													Pin-type wrench	1 607 950 061
	0 602 335 034	200	300	300	5100	3800	3100	13.2	10.0		Lever with lock		Open-ended spanner SW 17	2 607 950 511
	0 602 335 036	200	300	300	5100	3800	3100	13.2	10.0		Toggle		Auxiliary handle	1 602 025 022

The machines come equipped with a special 4-m-long cable without plug.

Your specialist dealer can provide you with information on the complete set of quality accessories.

DISC SANDERS AND RANDOM ORBIT SANDERS.

- The correct sander for all surfaces
- Best sanding results, even on large surfaces
- Robust motors with an extremely long service life
- Small random orbit sander with very high performance

disc sanders and random orbit sanders for sanding discs with 180 mm diameter

	Order number	Voltage (V)	Frequency (Hz)	Admissible grinding wheels-ø (mm)	No load speed (rpm)	Nominal power consumption (W)	Nominal power Output (W)	Nominal current (A)	Weight without cabel (kg)	Toolholding fixture Collet chuck (mm)	Switch type	Remarks	Comes complete with	Accessory Part number
HTS 75/180	0 602 373 004	135	200	180	3600	850	580	2.2	3.7	Threaded mounting M 14	Toggle	For fibre-sanding discs	Open-ended spanner SW 17	2 607 950 511
													Auxiliary handle	1 602 025 022
													Ringscrew	2 912 521 237
													Spring	2 916 680 011
	0 602 373 004	200	300	180	5400	1300	900	4.5	3.7				Gloves	2 601 329 036
HTS 86/180	0 602 370 101	265	200	180	6000	1000	800	3.4	4.7	Threaded mounting M 14	Toggle	For fibre-sanding discs	Open-ended spanner SW 24	1 907 950 513
	0 602 370 104	135	200	180	6000	1000	800	6.0	4.7				Open-ended spanner SW 19	1 907 950 511
	0 602 370 107	72	200	180	6000	1000	800	12.8	4.7				Auxiliary handle	1 602 025 022
													Gloves	2 601 329 036
HEX 5265/150	0 602 370 301	265	200	150	5800	520	360	1.6	2.7		Fastener	Slide switch	Auxiliary Handle	2 602 025 067
	0 602 370 304	135	200	150	5800	520	360	3.2	2.7				Dust bag	2 605 411 046
	0 602 370 307	72	200	150	5800	520	360	6.1	2.7				Screw-on connector	2 605 702 009
													Allen key	1 907 950 007
	0 602 370 311	72	300	150	7300	800	550	6.1	2.7					
	0 602 370 334	200	300	150	7300	800	550	3.2	2.7					

The machines come equipped with a special 4-m-long cable without plug.

Your specialist dealer can provide you with information on the complete set of quality accessories.

SELECTION GUIDE FOR GRINDERS.

Admissible working speed

Observe the following with grinding stones: Permissible speeds (rpm) depend on abrasive wheel diameter and length, as well as shank diameter and clamping length as per DIN 69170.

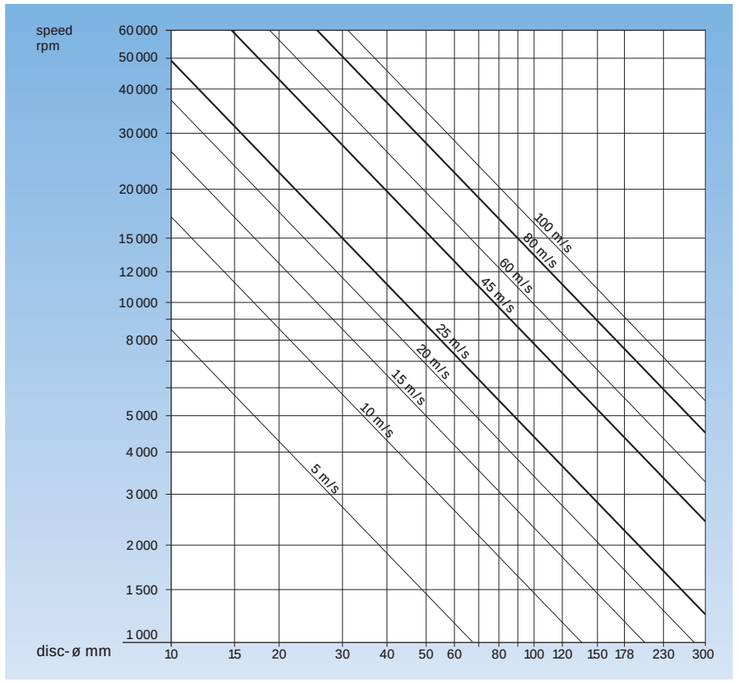

The table shows the relationship between the permissible diameter of the grinding wheel and the speed.

ACCESSORIES FOR ANGLE GRINDERS.

	Order number	Working-ø (mm)
Protective guard	1 605 510 110	180
Flange for straight grinding wheels	1 605 703 028	
Flange for tappered grinding wheels	1 600 501 006	
Locking nut	1 603 345 004	
SDS quick clamping flange	1 603 340 031	

ACCESSORIES FOR STRAIGHT GRINDERS.

Collets-ø	0 602 225 ... ...101/ ...104/ ...107/ ... 204/ ...211	0 602 236 ... ...001/ ...007	0 602 237 004	0 602 233 ... ...201/ ...204/ ...207/ ...304	0 602 226 ... ...201/ ...204/ ...207	0 602 227 ... ...204/ ...211	0 602 228 ... ...201/ ...204/ ...207/ ...211	0 602 229 ... ...101/ ...104	0 602 228 ... ...361/ ...361/ ...371/ ...374/ ...377	0 602 238 ... ...101/ ...104/ ...107/ ...134/ ...111	0 602 207 ... ...001/ ...008	0 602 208 001	0 602 209 ... ...101/ ...104/ ...107/ ...134/ ...111	0 602 210 ... ...001/ ...004	0 602 211 ... ...004/ ...010/ ...017/ ...018
3 mm	1 608 570 031	2 608 570 077		–		–									
1/8''		–2 608 570 078	–		–										
4 mm	1 608 570 033	–	–		–										
6 mm	1 608 570 037	2 608 570 079			2 608 570 118		–								
1/4''		–2 608 570 080	–		2 608 570 014										
8 mm		–2 608 570 081		2 608 570 016	2 608 570 009										
10 mm	–	–	–		2 608 570 017										

Accessories for conical grinding wheels	0 602 221... and 243 ...	0 602 212 ... and 242 ...	0 602 213 ...	0 602 240 ...	0 602 240 ...	0 602 239...
	45 and 80 m/s up to 80 mm ø	45 and 80 m/s up to 100 mm ø	45 m/s up to 125 mm ø	45 m/s up to 150 mm ø	80 m/s up to 150 mm ø	45 m/s up to 180 mm ø
Wheel guards	3 605 510 025	3 605 510 030	3 605 510 031	3 605 510 018	3 605 510 017	3 605 510 016
Mounting flange	3 605 703 028	3 605 703 028	3 605 703 068	3 605 703 068	3 605 703 068	3 605 703 068
Collet flange	3 605 703 074	3 605 703 074	3 605 703 077	3 605 703 077	3 605 703 070	3 605 703 077
admissible grinding point width (mm)	20/25	20/25	20/25	20/25	20/25	20

	Order number	Product type for model 0 602 ...	Length in mm
Spindle extension	3 606 120 031	... 238 101 – 234	150
	3 606 120 032	... 238 101 – 234	300
Auxiliary handle	3 602 025 008	... 225 ...	46

DIMENSIONAL DRAWINGS: STRAIGHT GRINDERS.

Dimensions mm

Order number

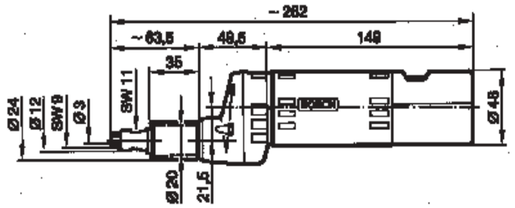

0 602 225 101
0 602 225 104
0 602 225 107
0 602 225 204
0 602 225 211

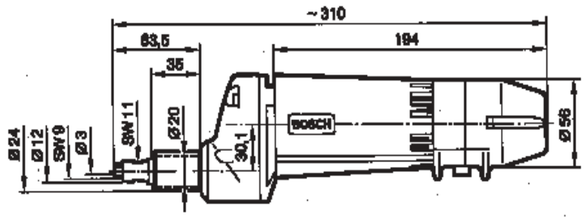

0 602 233 201
0 602 233 204
0 602 233 207
0 602 233 304

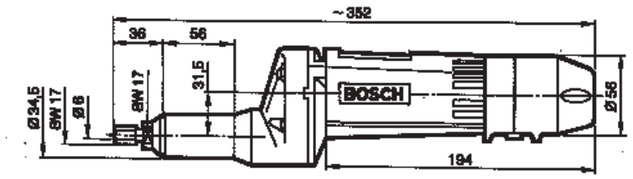

0 602 226 201
0 602 226 204
0 602 226 207
0 602 227 204
0 602 227 211

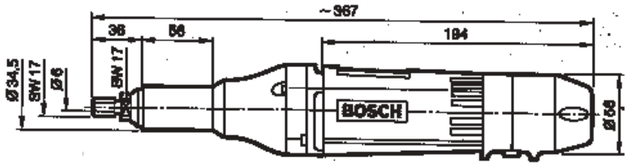

0 602 228 201
0 602 228 204
0 602 228 207
0 602 228 211

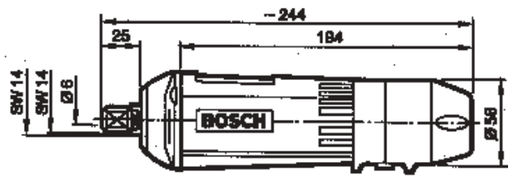

0 602 229 101
0 602 229 104

DIMENSIONAL DRAWINGS: STRAIGHT GRINDERS.

Dimensions mm

Order number

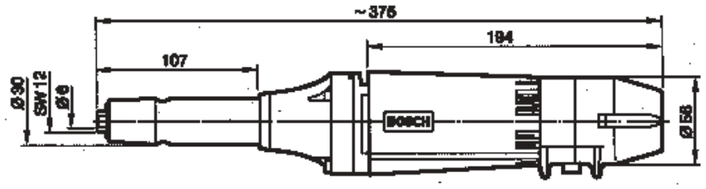

0 602 228 361
0 602 228 364

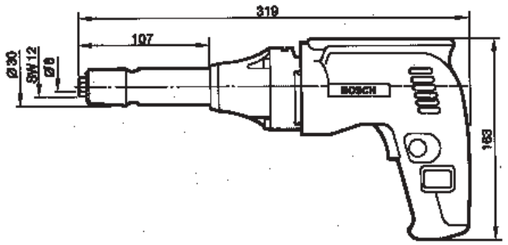

0 602 228 371
0 602 228 374
0 602 228 377

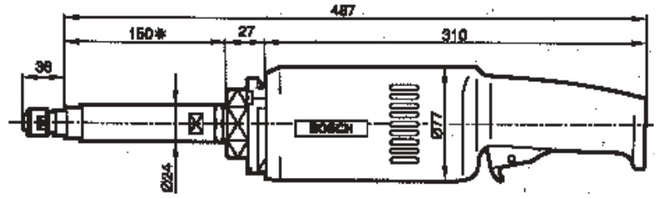

0 602 238 101
0 602 238 104
0 602 238 107
0 602 238 111
0 602 238 134

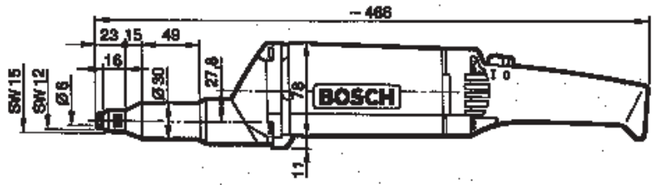

0 602 207 001
0 602 207 004
0 602 207 008
0 602 208 001

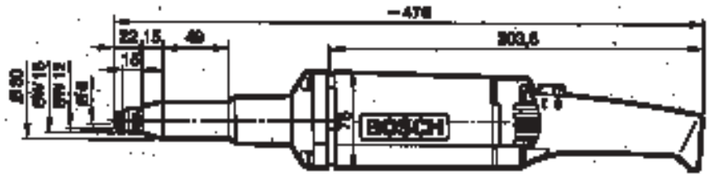

0 602 209 101
0 602 209 104
0 602 209 107
0 602 209 111
0 602 209 134

DIMENSIONAL DRAWINGS: STRAIGHT GRINDERS.

Dimensions mm

Order number

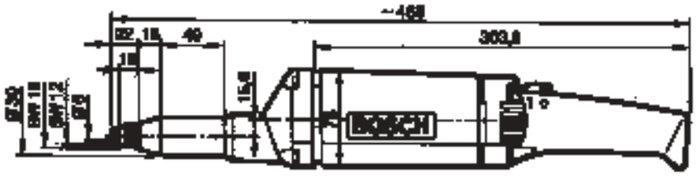

0 602 210 001
0 602 210 004

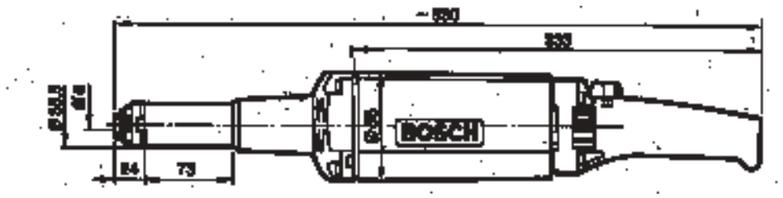

0 602 211 004
0 602 211 010
0 602 211 017
0 602 211 018

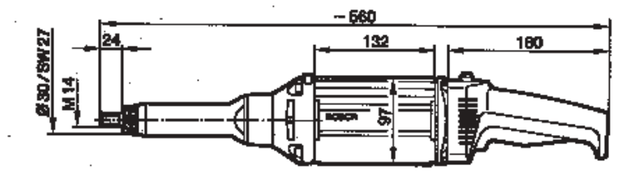

0 602 245 011
0 602 245 034

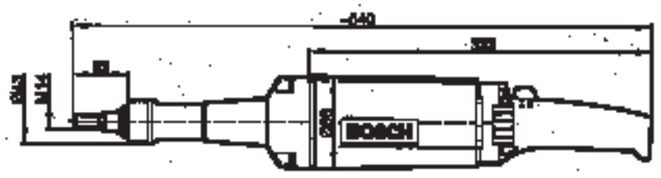

0 602 211 101
0 602 211 107
0 602 211 116
0 602 211 134

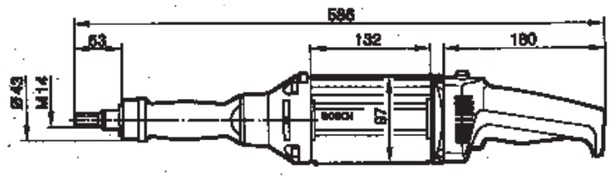

0 602 243 134

DIMENSIONAL DRAWINGS: STRAIGHT GRINDERS.

Dimensions mm

Order number

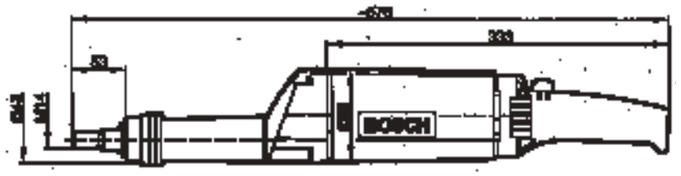

0 602 212 101
0 602 212 104
0 602 212 107

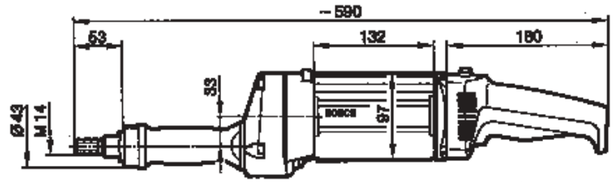

0 602 242 101
0 602 242 104
0 602 242 107
0 602 242 134
0 602 242 436

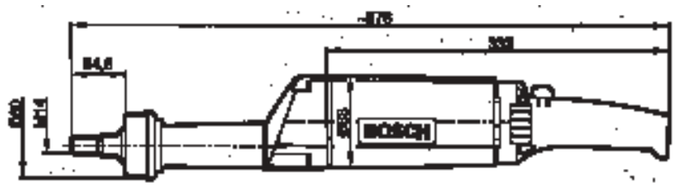

0 602 213 104

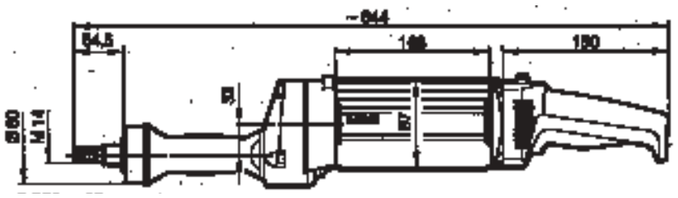

0 602 240 034
0 602 240 035
0 602 240 104
0 602 240 107
0 602 240 134
0 602 239 104
0 602 239 107
0 602 239 134

DIMENSIONAL DRAWINGS: ANGLE GRINDERS.

Dimensions mm

Order number

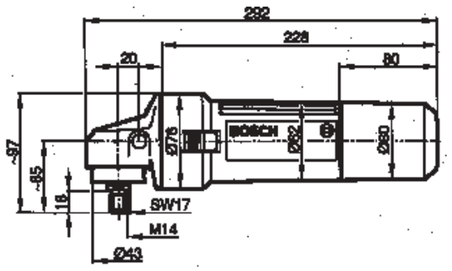

0 602 324 301
0 602 324 304
0 602 324 307
0 602 324 341
0 602 324 344
0 602 324 347
0 602 324 324
0 602 324 331

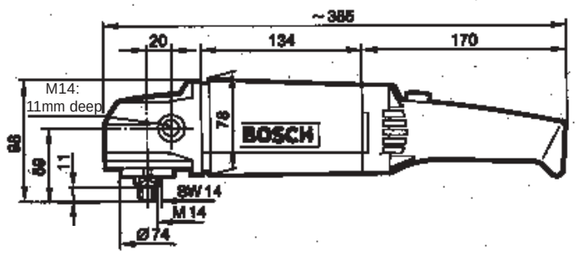

0 602 301 201
0 602 301 204
0 602 301 207
0 602 301 104
0 602 327 001

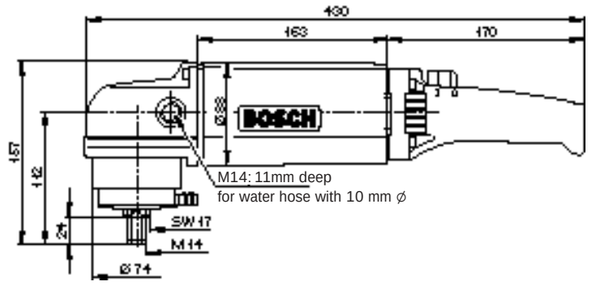

0 602 305 010

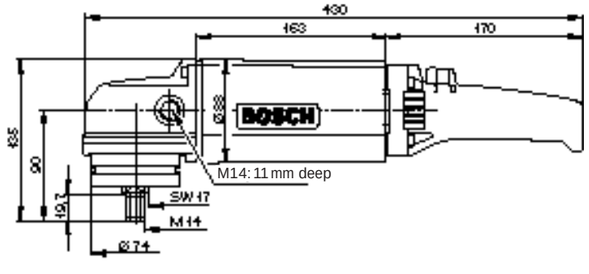

0 602 304 001
0 602 304 004
0 602 304 009
0 602 304 010
0 602 304 034
0 602 305 001
0 602 305 004
0 602 305 008
0 602 306 034

DIMENSIONAL DRAWINGS: ANGLE GRINDERS.

Dimensions mm

Order number

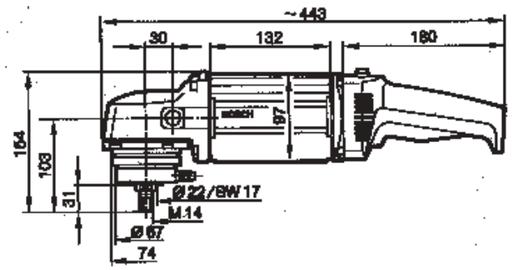

0 602 329 001
0 602 329 004
0 602 329 007
0 602 329 011
0 602 329 034
0 602 329 036

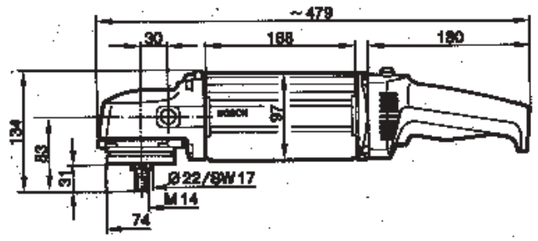

0 602 331 001
0 602 331 003
0 602 331 004
0 602 331 007
0 602 331 034
0 602 331 036
0 602 332 001
0 602 332 003
0 602 332 004
0 602 332 005
0 602 332 007
0 602 332 011
0 602 332 034
0 602 332 036

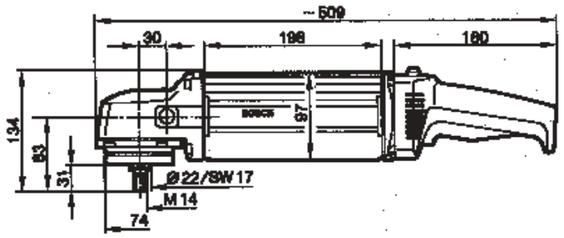

0 602 334 101
0 602 334 107
0 602 334 134
0 602 334 136
0 602 335 001
0 602 335 004
0 602 335 007
0 602 335 034
0 602 335 036

DIMENSIONAL DRAWINGS: DISC SANDERS AND RANDOM ORBIT SANDERS.

Dimensions mm

Order number

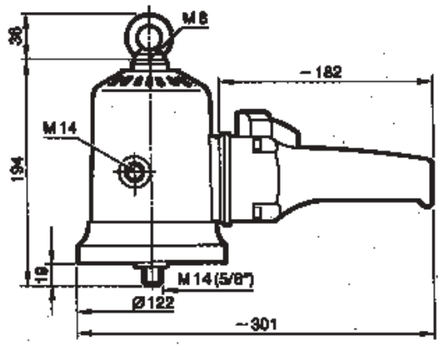

0 602 370 101
0 602 370 104
0 602 370 107

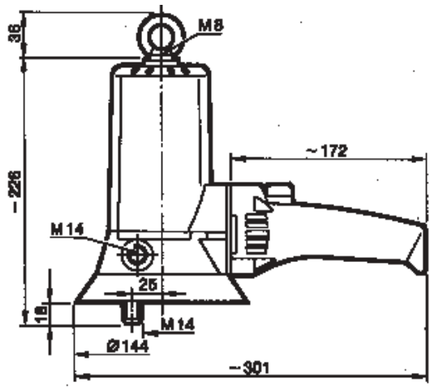

0 602 373 004

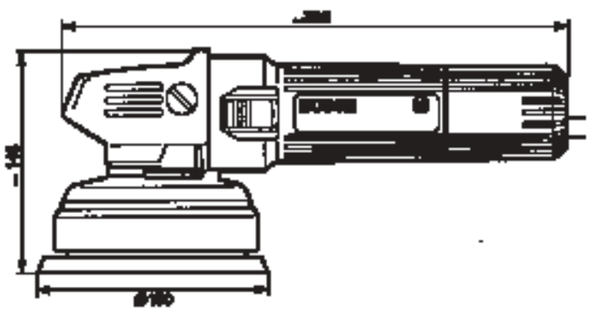

0 602 370 301
0 602 370 304
0 602 370 307
0 602 370 311
0 602 370 334

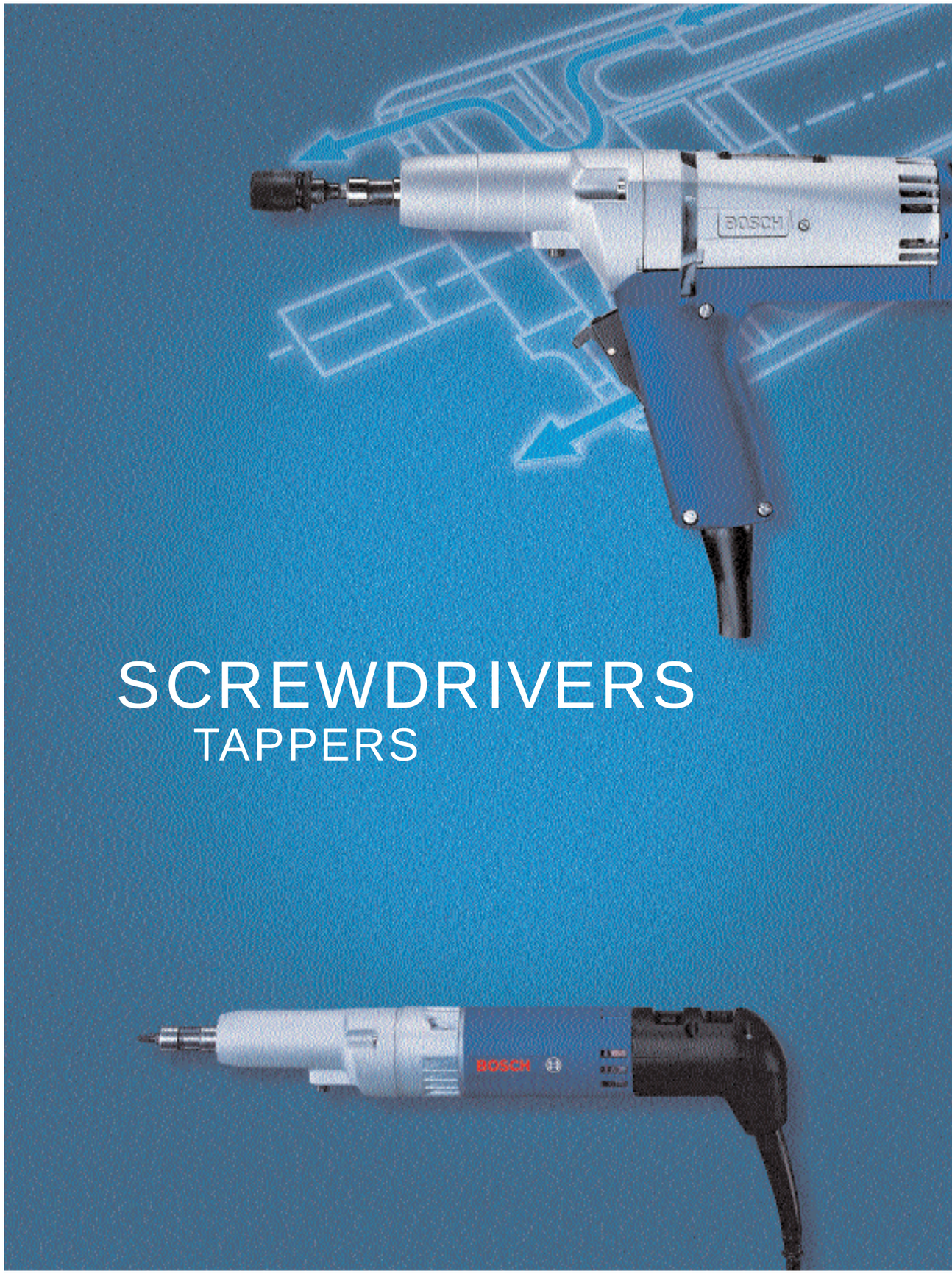

SELECTION GUIDE FOR SCREWDRIVERS.

Torque is a decisive parameter for controlling the pretension force applied. The table provides an overview of the recommended torques for common bolt and nut sizes. The recommended maximum torques apply to untreated, oil-lubricated screws (coefficient of friction = 0.125). The torques correspond to approx. 62 % of the yield point.

	Order number
Screwdrivers with adjustable cut-off clutch ● For screw connections with high torque accuracy ● Torque upper range limited by reaction torques ● Further advantages: low noise, low wear, long service life, the user has no influence on the torque	0 602 485 1..
	0 602 488 1..
	0 602 486 2..
	0 602 489 0..
	0 602 487 0..
Impact Wrenches ● For large screw / bolt diameters with high torque ● Virtually free of reaction torque, therefore no upward limitation	0 602 442 0..
	0 602 443 0..
	0 602 440 0..
	0 602 433 1..
	0 602 438 0..
	0 602 435 0..
	0 602 439 0..

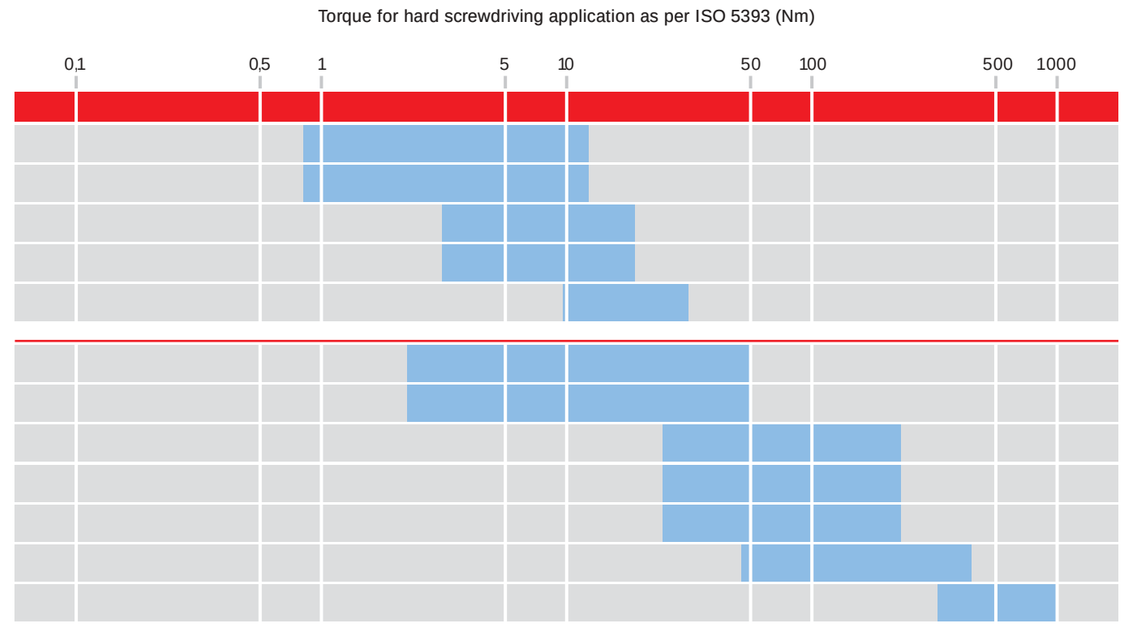

Torque accuracy depending on screwdriver system and screwdriving type

The torque that can be achieved for a screw connection depends on the type of screwdriving / bolting situation. To achieve a balanced basis for assessment, all data on screwdrivers is based on unbending, or "hard" screw connections (30° angle of rotation). In the case of flexible or "soft" screw connections, achievable values are, in part, considerably below the nominal values. Furthermore, torque variance increases. Due to the wide variety of possibilities, specifications with absolute values are not possible. If in doubt, use a trial and error system. The table offers an overview of the advantages and achievable torque accuracy of the individual screwdriver systems with various characteristic screwdriving applications.

Bolting event	Angle of rotation to M_d max.	Torque accuracy with automatic shut-off	Torque accuracy with overload disengaging clutch	Torque accuracy with percussion mechanism
	up to approx. 30°	very good	good to very good	satisfactory – depending upon the degree of accuracy required
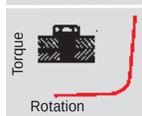	up to approx. 60°	good to very good	good to satisfactory	somewhat unsatisfactory
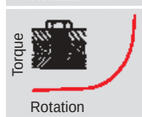	over 60°	good – provided cut-out function is still operative	satisfactory	satisfactory –provided only a low level of accuracy is required
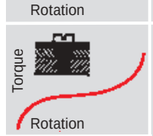	angle of rotation not definable	good – provided cut-out function is still operative	satisfactory	satisfactory
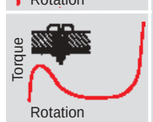		good – provided cut-out function is still operative	good	satisfactory
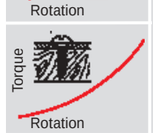		good – provided cut-out function is still operative	good – provided that the function is still operative	good

Tightening torque

Guideline values for maximum bolt/screw tightening torques in Nm. Assumed friction below head $m_{ges.}$ = 0.12, calculated from the stressed cross sections: yield point usage 90 %. Valid for shaft screws with standard metric thread as per DIN 13, BL 13; heads as per DIN 931, 933.

When you select a screwdriver, you must consider not only the required torque – as a function of the pretensioning force required from the bolted connection – but also the torque accuracy as a function of the bolting event. This information has been compiled in tables 1 and 2 in order to facilitate the selection from among the various bolting systems. The fixed torque values provided apply to "hard" bolted connections. The maximum values are lower for "soft" bolted connections (e.g. spring washers, rubber washers, etc.)

Hardness class per DIN 267	8.8	10.9
M 2.5	0.7	1.0
M 3	1.2	1.7
M 4	2.9	4
M 5	5.5	8
M 6	9.7	13.6
M 8	23	33
M 10	47	65
M 12	80	113
M 14	130	180
M 16	196	275
M 18	270	380
M 20	385	540
M 22	510	715
M 24	650	910
M 27	960	1345
M 30	1300	1830

CUT-OUT SCREWDRIVERS.

with adjustable cut-out clutch for screws from M 4 to M 10

	Order number	Voltage (V)	Frequency (Hz)	Max. thread size	Torque (Nm) for hard screwdriving application as per ISO 5393	No load speed (rpm)	Nominal capacity Output (W)	Nominal power output (W)	Nominal current (A)	Weight without cabel (kg)	Toolholding fixture Hex. = hexagon	Remarks	Comes complete with	Accessory part number
HSR 44-A	0 602 485 101	265	200	M 4	0.8–2.5	840	80	40	0.2	0.8	1/4″ Hex.	Handle grip with ON/OFF and reverse switch	Gib-head key for torque adjustment	1 607 950 037
	0 602 485 104	135	200	M 4	0.8–2.5	840	80	40	0.5	0.8	1/4″ Hex.			
	0 602 485 118	42	300	M 4	0.9–3.0	1260	125	65	2.4	0.8	1/4″ Hex.			
HSR 48-A	0 602 488 101	265	200	M 6	3–6	840	170	85	0.5	1.1	1/4″ Hex.	Handle grip with ON/OFF and reverse switch	Gib-head key for torque adjustment	1 607 950 037
	0 602 488 104	135	200	M 6	3–6	840	170	85	1.0	1.0	1/4″ Hex.			
	0 602 488 107	72	200	M 6	3–6	840	170	85	1.8	1.0	1/4″ Hex.			
	0 602 488 104	200	300	M 6	3.2–6.5	1260	265	135	1.0	1.0	1/4″ Hex.			
	0 602 488 118	42	300	M 6	3.2–6.5	1260	265	135	5.0	1.0	1/4″ Hex.			
HSR 55-A	0 602 486 201	265	200	M 6	3.5–12	590	260	140	0.9	2.1	1/4″ Hex.	Middle grip with ON/OFF and reverse switch	Gib-head key for torque adjustment	1 607 950 037
	0 602 486 204	135	200	M 6	3.5–12	590	260	140	1.7	1.7	1/4″ Hex.			
	0 602 486 204	200	300	M 8	4–13	900	400	220	1.7	1.7	1/4″ Hex.			
HSR 57-A	0 602 489 001	265	200	M 8	5–17	690	400	270	1.6	2.3	1/4″ Hex.	Pistol grip with ON/OFF and reverse switch	Gib-head key for torque adjustment	1 607 950 037
	0 602 489 004	135	200	M 8	5–17	690	400	270	3.3	2.3	1/4″ Hex.			
	0 602 489 007	72	200	M 8	5–17	690	400	270	6.1	2.3	1/4″ Hex.			
	0 602 489 004	200	300	M 8	6–20	1040	600	400	3.3	2.3	1/4″ Hex.			
HSR 64-A	0 602 487 001	265	200	M 10	9–24	780	350	200	1.0	2.8	1/4″ Hex.	Middle grip with ON/OFF and reverse switch	Gib-head key for torque adjustment	1 607 950 037
	0 602 487 004	135	200	M 10	9–24	780	350	200	2.0	2.8	1/4″ Hex.			
	0 602 487 007	72	200	M 10	9–24	780	350	200	3.0	2.8	1/4″ Hex.			

The machines come equipped with a special 4-m-long cable without plug.

Your specialist dealer can provide you with information on the complete set of quality accessories.

IMPACT WRENCHES.

impact wrenches for screws from M 6 to M 30

	Order number	Voltage (V)	Frequency (Hz)	Max. thread size	Torque (Nm) for hard screwdriving application as per ISO 5393	No load speed (rpm)	Nominal capacity Output (W)	Nominal power output (W)	Nominal current (A)	Weight without cabel (kg)	Toolholder Drive Hex. = hexagon Sq. = external square	Remarks	Comes complete with	Accessory part number
HSS 48	0 602 442 001	265	200	M 10	30	1650	170	85	0.5	1.1	1/4″ Hex.	Handle grip with ON/OFF and reverse switch		
	0 602 442 004	135	200	M 10	30	1650	170	85	1.0	1.1	1/4″ Hex.			
	0 602 442 007	72	200	M 10	30	1650	170	85	1.8	1.1	1/4″ Hex.			
	0 602 443 004	200	300	M 10	30	1780	265	135	1.0	1.1	1/4″ Hex.			
HSS 55	0 602 440 001	265	200	M 12	80	1410	260	140	0.9	2.4	1/2″ Sq. with spring pin	Handle grip with ON/OFF and reverse switch		
	0 602 440 004	135	200	M 12	80	1410	260	140	1.7	2.4	1/2″ Sq. with spring pin			
HSS 64	0 602 433 101	265	200	M 16	190	1100	360	220	1.0	3.0	1/2″ Sq. without spring pin	Centre grip with ON/OFF and reverse switch		
	0 602 433 104	135	200	M 16	190	1100	360	220	2.0	3.0	1/2″ Sq. without spring pin			
	0 602 433 107	72	200	M 16	190	1100	360	220	3.7	3.0	1/2″ Sq. without spring pin			
	0 602 438 004	200	300	M 16	190	1100	550	340	2.0	3.0	1/2″ Sq. without spring pin			
HSS 75	0 602 435 001	265	200	M 22	350	800	850	580	2.2	5.6	3/4″ Sq.	Palm grip with ON/OFF and reverse switch	Auxiliary handle	1 602 025 030
	0 602 435 004	135	200	M 22	350	800	850	580	4.5	5.6	3/4″ Sq.			
	0 602 435 008	72	200	M 22	350	800	850	580	8.5	5.6	3/4″ Sq.			
HSS 77	0 602 439 001	265	200	M 30	1000	600	950	700	2.8	8.6	1″ Sq.	Two handled grip with ON/OFF and reverse switch		
	0 602 439 004	135	200	M 30	1000	600	950	700	5.5	8.6	1″ Sq.			
	0 602 439 007	72	200	M 30	1000	600	950	700	10.0	8.6	1″ Sq.			

The machines come equipped with a special 4-m-long cable without plug.

Your specialist dealer can provide you with information on the complete set of quality accessories.

TAPPERS.

tappers for threads up to 8 mm in diameter

	Order number	Voltage (V)	Frequency (Hz)	Working range thread ø (mm)	Spacebolt ø (mm)	Nominal power consumption [W]	No load speed (rpm) forward	Reverse	Nominal power consumption (W)	Nominal power output (W)	Nominal current (A)	Weight without cabel (kg)	Toolholding fixture	Remarks	Comes complete with	Accessory part number
HGR 55/10	0 602 463 101	265	200	8	6	3–10	380	750	260	150	0.9	2.3	Cone B 12 DIN 238		Two-jaw drill chuck	3 608 573 000
	0 602 463 104	135	200	8	6	3–10	380	750	260	150	1.7	2.3	Cone B 12 DIN 238		Fastening key	
	0 602 463 107	72	200	8	6	3–10	380	750	260	150	3.2	2.3	Cone B 12 DIN 238		for 3.0 mm high	3 603 111 004
															for 3.3 mm high	3 603 111 005
															for 3.6 mm high	3 603 111 003
															Spare key	2 607 950 012

The machines come equipped with a special 4-m-long cable without plug.

Your specialist dealer can provide you with information on the complete set of quality accessories.

ACCESSORIES FOR SHUT-OFF SCREWDRIVER.

	Order number	0 602 485 ...	0 602 488 ...	0 602 486 ...	0 602 489 ...	Packing unit
Hanging hook	3 604 682 001	•	•			1
	3 604 682 000			•	•	1

SPECIAL ACCESSORIES FOR SCREWDRIVERS.

	Order number	0 602 442 ...	0 602 443 ...	0 602 440 ...	0 602 433 ...	Packing unit
Loop hanger	3 604 682 001	•	•	•		1
Cylinder screws for fastening	2 910 021 118	•	•	•		1
Quick-change collet chuck 7/16″	1 606 455 012				•	1

Your specialist dealer can provide you with information on the complete set of quality accessories.

DIMENSIONAL DRAWINGS: CUT-OUT SCREWDRIVERS.

Dimensions mm

	Order number
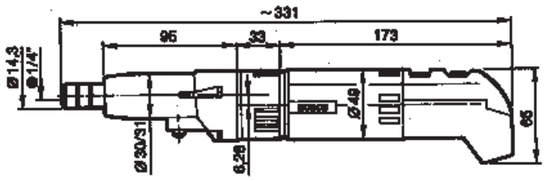	0 602 485 101 0 602 485 104 0 602 485 118
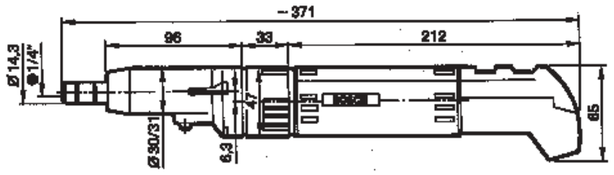	0 602 488 101 0 602 488 104 0 602 488 107 0 602 488 118
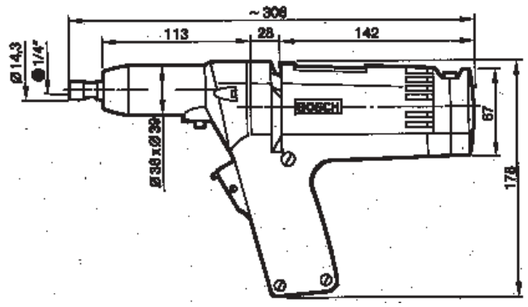	0 602 486 201 0 602 486 204
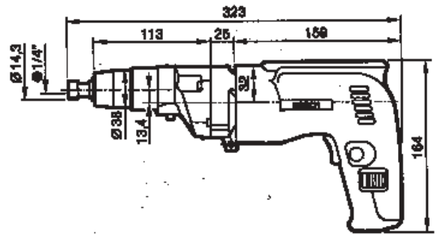	0 602 489 001 0 602 489 004 0 602 489 007
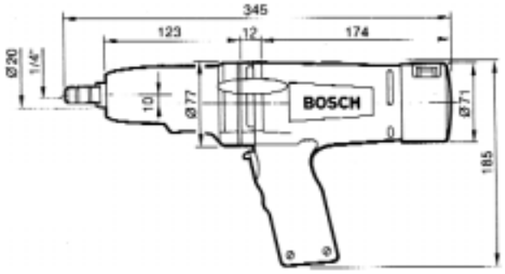	0 602 487 001 0 602 487 004 0 602 487 007

DIMENSIONAL DRAWINGS: IMPACT WRENCHES.

Dimensions mm

Order number

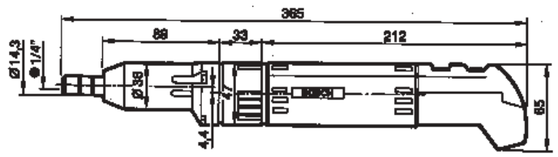

0 602 442 001
0 602 442 004
0 602 442 007
0 602 443 004

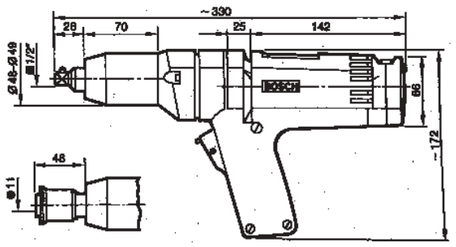

0 602 440 001
0 602 440 004

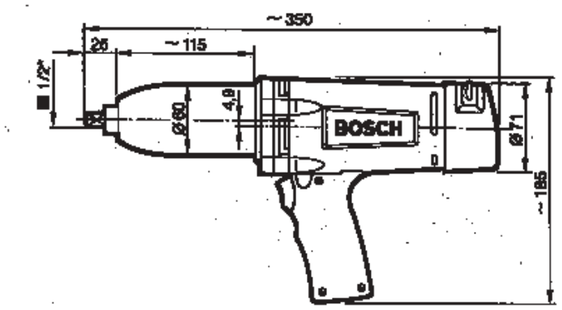

0 602 433 101
0 602 433 104
0 602 433 107
0 602 438 004

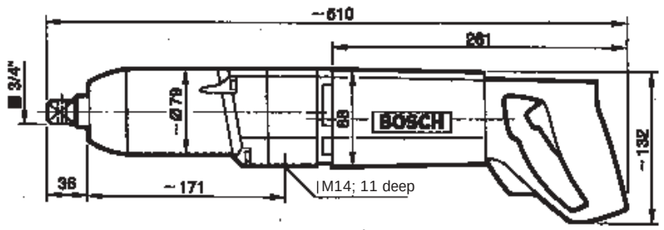

0 602 435 001
0 602 435 004
0 602 435 008

DIMENSIONAL DRAWINGS: IMPACT WRENCHES.

Dimensions mm

Order number

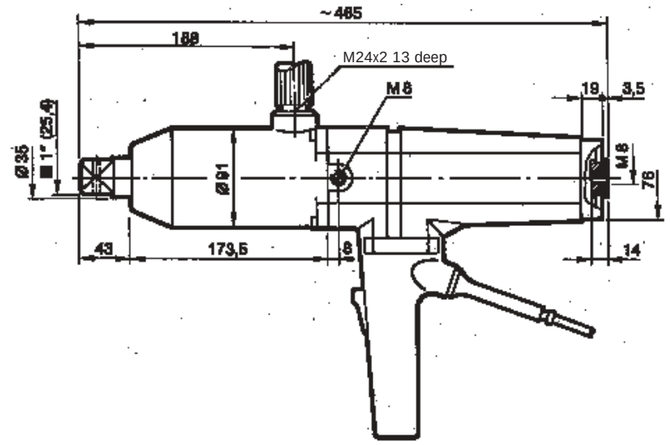

0 602 439 001
0 602 439 004
0 602 439 007

DIMENSIONAL DRAWINGS: ANGLE WRENCHES.

Dimensions mm

Order number

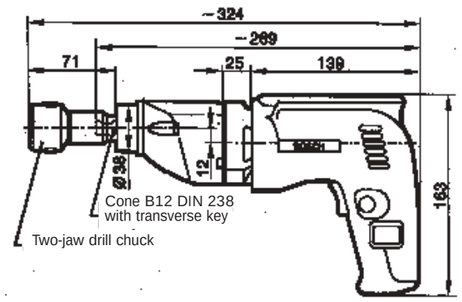

0 602 463 101
0 602 463 104
0 602 463 107

ACCESSORIES

BALANCER.

Balancer

- Robust metal safety hanger including spring hook
- Bowden cable with high-quality distributor valve and safety coupling for uniform pulling out behaviour
- Spring fracture safety device balancers with a load burden greater than 3 kg
- Cable change possible without disassembly of the spring drum
- Simple change of the weight class through modular structure

for loads from 0.3 to 17 kg

		Order number	Load min. (kg)	Load max. (kg)	Max. lift (mm)	Weight (kg)	Remarks
Balancer		0 607 950 920	0.3	1.2	1200	0.5	Spring balancer with adjustable load range
Balancer		0 607 950 921	0.6	1	2000	0.7	Spring balancer with adjustable load range
		0 607 950 922	1	2	2000	0.7	
		0 607 950 923	2	3	2000	0.8	
		0 607 950 931	0.5	2	2000	0.7	Balancer with adjustable load range with lock
		0 607 950 937	1.5	3	2000	0.8	
Balancer		0 607 950 924	3	5	2000	3	Spring balancer with adjustable load range
		0 607 950 925	6	8	2000	3.2	
		0 607 950 926	8	10	2000	3.4	
Balancer		0 607 950 927	9	14	2000	3.4	Spring balancer with adjustable load range
		0 607 950 928	13	17	2000	3.6	

Your specialist dealer can provide you with information on the complete set of quality accessories.

PLUG CONNECTIONS, LEADS.

CEE plugged connections DIN 49 462/63 and DIN 49 465 for frequencies from 100 to 300 Hz (green housing)	Order number	Voltage (V)	Load capacity (A)	Packing unit
Connector plug	1 614 482 048	50 – 300	16	1
	1 614 482 049	50 – 300	32	1
	1 614 482 050	to 50	32	1
Coupling socket	1 614 484 010	50 – 300	16	1
	1 614 484 011	50 – 300	32	1
	1 614 484 012	to 50	32	1
Wall socket	1 614 485 024	50 – 300	16	1
	1 614 485 025	50 – 300	32	1
	1 614 485 026	to 50	32	1

Electrical leads	Order number	Material number	Lead cross-section (mm²)	Outer-Ø (mm)
4-core cable (length 50 m)	3 604 422 003	6 254 812 403	0.75	8
	3 604 422 077*	3 604 422 023	1.50	11
	3 604 422 050*	3 604 422 024	2.50	13
working lenght 4 m (spiral line)	3 604 462 002		0.75	8
working lenght 6 m (spiral line)	3 604 462 003		0.75	8
3-core cable (length 50 m) for 42 V operating voltage	3 604 422 004	6 254 811 303	0.75	7

*unpacked

Frequency converters can be obtained from: EME GmbH · Postfach 0306 · D-78257 Ettlingen · Telephone 0 72 43/32 06 06 · Fax 0 72 43/32 06 11 or 32 06 12
Please consult your stockist for information on the complete range of quality accessories.

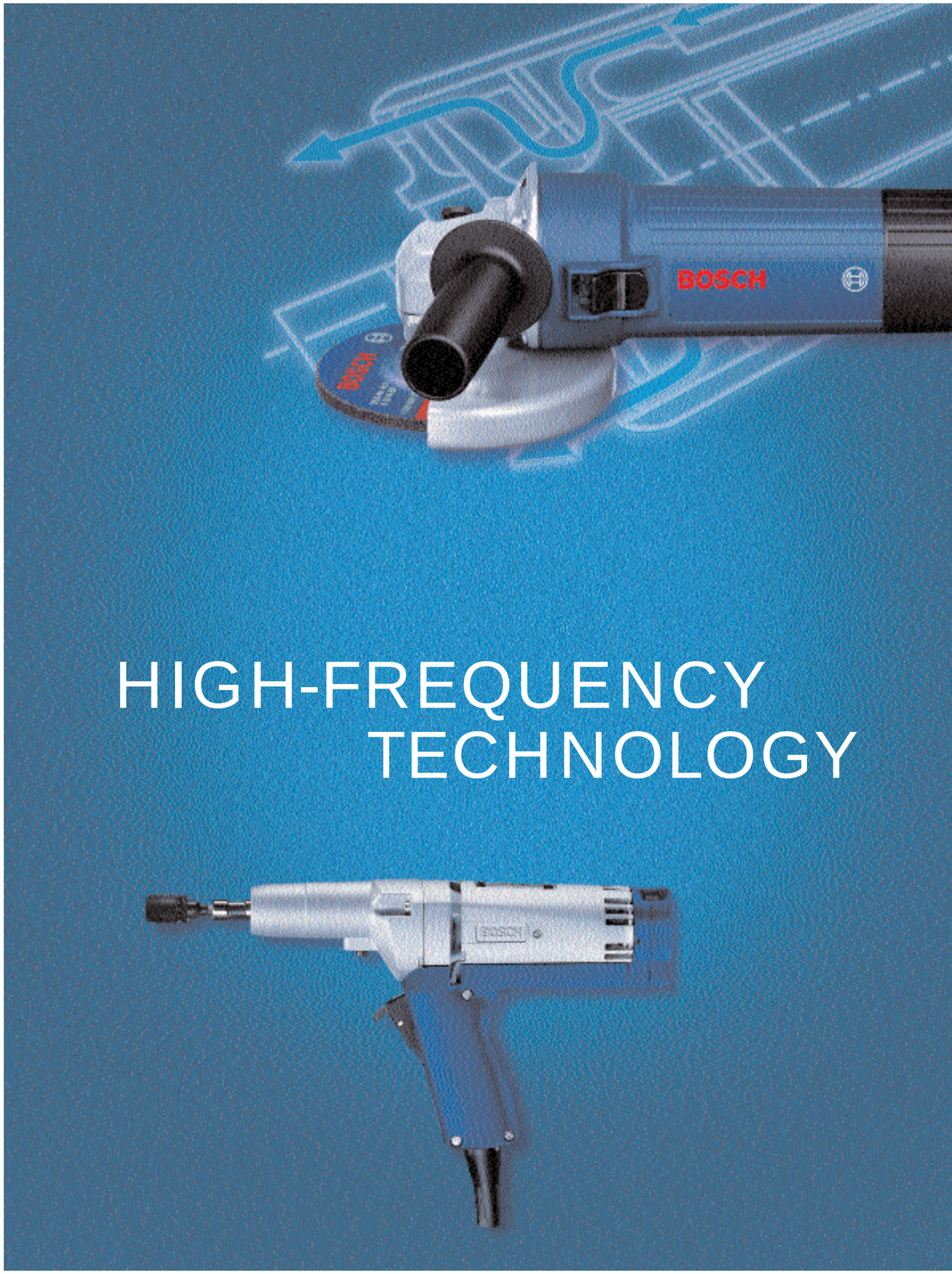

ROBUST TECHNOLOGY FOR LONG-TERM HEAVY-DUTY USE.

A high-frequency motor is a three-phase current motor with a short-circuit rotor. Its stator and rotor consist of a laminated sheet-metal bundle. If the stator winding of the motor is connected to the three-phase current supply, a magnetic field is created (rotary field), which runs through the motor due the arrangement of the winding and which is dependent on number of pole pairs and the frequency.

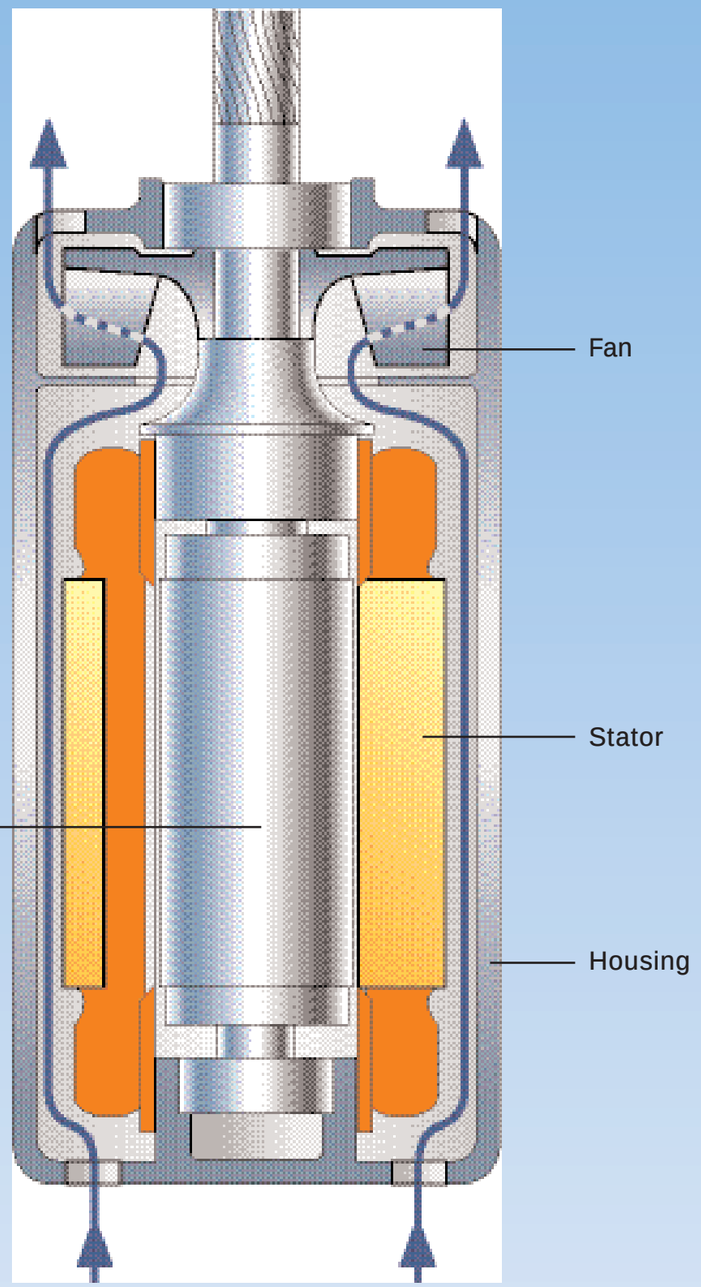

A real concept: High-frequency Tools

How a good idea was consistently further developed: The designation 'high-frequency tools' came to be known through the market launch of the tools and was given to those powerful high-frequency tools with asynchronous motors, operated with three-phase current at an increased frequency of 200 or 300 Hz. In a physical sense, there is no real connection between these tools and genuine high-frequency technology, but they still came to be known under this name.

The operating frequency determines the performance

In hand tools, rotary current at increased frequency of 200 or 300 Hz combines high electrical performance with minimal motor weight. As the frequency of the rotary current increases, there is a proportional increase in motor speed and thus in the performance of asynchronic motors. This is limited by the maximum admissible circumference velocity (operating rotational speed) of the tools. An optimum performance/weight ratio is achieved by high-frequency tools operating at a frequency of 200 to 300 Hz (Fig. 1). Large differences between motor rotational speed and operating rotational speed require larger gears. This means that weight savings from the rotary current drive are negated by the increased weight from the stepdown gearing.
High-frequency installations using exclusively grinders should be operated at 300 Hz. Using rotary current at increased frequency optimally fulfils the demand for light yet high-performance hand tools.

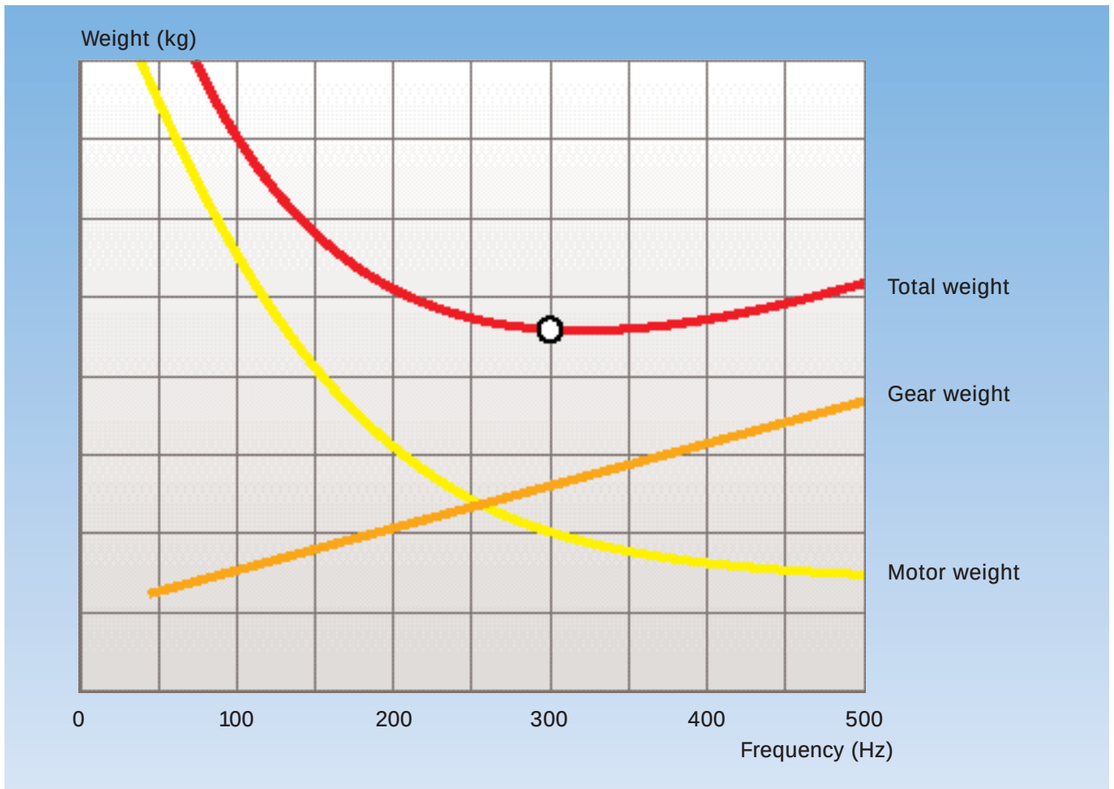

Fig. 1 The graph shows the dependence of motor and gearing weight on frequency at constant motor performance and rated rotational speed. 300 Hz yields an optimum performance/weight ratio.

RELIABLE THREE-PHASE CURRENT MOTORS WITH A LONG SERVICE LIFE.

A magnetic field forms in a three-phase current motor, which circulates through the motor. This is called a rotary field and is dependent on the number of pole pairs and frequency. When the smallest possible number of pole pairs is used, at a frequency of 50 Hz, for example, a rotary field or rotor speed of 3000 rpm results; at a frequency of 200 Hz: 12000 rpm and at 300 Hz: 18000 rpm.

Due to the short distance between bearings and the stationary stator coil, the motor is both mechanically and electrically very reliable. It is distinguished by steady, low-vibration operation. Speed drop is only approx. 5 % at rated load, and peak performance is around 2 1/2 times the rated performance. Short-term overloads are possible as long as they do not result in the admissible coil temperature being exceeded. Since the objective in hand tools is to make them as light as possible with the highest possible performance, Bosch has decided in favour of “dust protection with direct cooling" for its high-frequency motors (Fig. 2). This combines the advantages of both encapsulated and open construction. The flow of cooling air ensures good heat dissipation; at the same time, dust and dirt are prevented from penetrating into the rotating system.

The design concept underlying Bosch high-frequency electric tools offers the user the following advantages:

- **Optimum performance in a light-weight tool**
  During extended operation, Bosch high-frequency electric tools achieve a performance level of up to 400 watts per kilogram machine weight. Short-term peak performance levels reach 2 1/2 times normal operating perfor mance output. These high reserves mean a decisive improvement in work performance.

- **Constant rotational speed under load**
  The speed drop for Bosch high-frequency electric tools is only 3 – 5 % at rated load (Fig. 2). This ensures that recommended average speeds can be used to full advantage during grinding and drilling. The constant average speed means that the tools can be employed more efficiently and achieve a longer service life.

- **Minimal maintenance cost combined with high load capacity**
  Bosch high-frequency electric tools offer an easy-to-service construction design and a motor without wear parts. Even when subject to extreme stress conditions (e.g. in foundries), they live up to their reputation for long service life at low maintenance cost.

- **Highly effective**
  Due to their high efficiency levels, Bosch high-frequency electric tools offer economical, environmentally compatible operation under extended operation conditions.

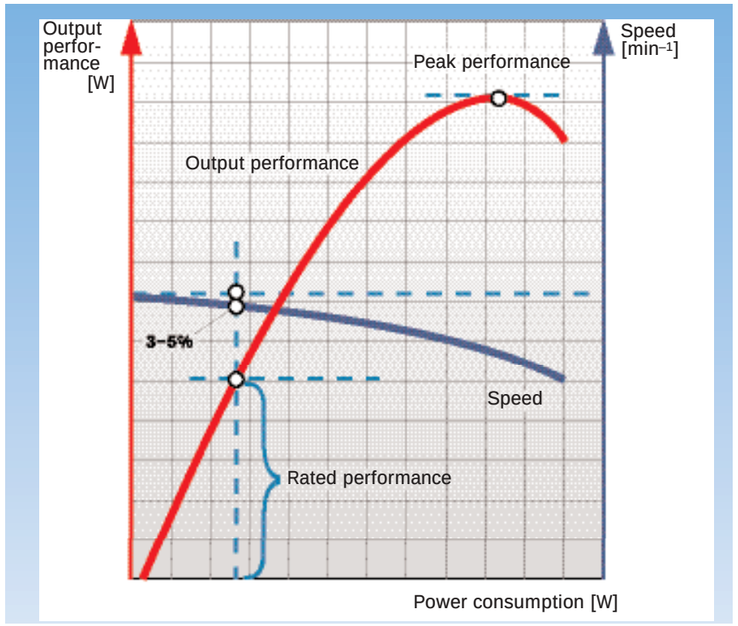

Fig. 2 Output and rotational speed curve as a function of load moment

ELECTRICAL OPERATING VALUES.

An operating frequency of 300 Hz is to be recommended for a high-frequency electric tool installation. The higher motor rotational speed at 300 Hz is particularly advantageous at today's circumference velocities for grinders. The increased motor rotational speed results in higher machine performance without an increase in weight. In so far as possible, 135 V current should be selected for 200 Hz and 200 V for 300 Hz, regardless of country.

The secondary power output of the frequency converter or its size is calculated as follows: The high-frequency electric tools to be used are grouped according to motor size and number so that their rated current consumption can be added together. Multiplying the sum of the rated current values by the operating voltage and the factor ö3 results in a calculation for the entire apparent power consumption for the tools. The formula is:

$$S = \sqrt{3} \cdot U \cdot I = 1.73 \cdot U \cdot I$$

Once the apparent power value has been calculated in this way, it must still be multiplied by the simultaneity factor G in order to obtain the secondary power output of the converter. The simultaneity factor G takes into account the degree of use of all of the tools – since the tools are generally not all used at the same time.

For the simultaneity factor G, we have the following experiential values:

automobile body manufacture	0.45
motor manufacture	0.30
appliance manufacture	0.40
tool and form manufacture	0.25
steel manufacture	0.50
foundry work	0.60

In planning for a high-frequency electric tool installation, you must always take into account the need for a certain amount of reserve power in the frequency converter. Particularly for small installations, you must bear in mind that the power output must be at least twice the rated power consumption of the most powerful high-frequency electric tool to be connected. This ensures that the tools will start without trouble. In the event of short-term overload, the voltage drop at the frequency converter will not be too large.

Network groups

Operating frequencies and operating voltages

Number of work groups	200 Hz	300 Hz
1	265 V	–
2	135 V	200 V
3	72 V	(110 V)
4	–	72 V
7	–	42 V
10	42 V	–

Ideal network group is highlighted

Sample calculation for a high-frequency electric tool installation

A foundry wishes to introduce 3 high-frequency 0 602 332 034 angle grinders with 230 mm diameter cutting discs and 3 high-frequency 0 602 242 134 straight grinders with 100 mm diameter grinding discs.

Calculation:
(Refer to pages 24 – 25 and 30 – 31 for current and voltage values)

3 grinders, motor size 88	3 · 10 A = 30.0 A
3 girnders, motor size 85	3 · 6.4 A = 19.2 A
Total:	49.2 A

This yields the apparent power:

$$S = 1.73 \cdot U \cdot 1$$
$$= 1.73 \cdot 200\ V \cdot 49.2\ A$$
$$= \text{approx. } 17023\ VA$$
$$= \text{approx. } 17\ kVA$$

This value must still be multiplied by the simultaneity factor, G = 0.6 for foundries:

Converter apparent power =
$S \cdot G = 17\ kVA \cdot 0.60 = 10.2\ kVA$

In this case, a converter with 11 kVA secondary power is selected so that there are additional power reserves of approx. 10 %.

DESIGNING AN INSTALLATION FOR HIGH-FREQUENCY ELECTRIC TOOLS.

Frequency converter with synchronic generator

The best solution, technically speaking, in selecting frequency converters is the combination of asynchronic motors with synchronic generators. The converters are single-wave aggregates with an asynchronic motor as drive motor and a brushless innerpole-generator with built-in current generator.
The voltage difference between idling and operation under full load is only approx. 3 % for small transformers at cos f 0.6 – 0.9, for large converters, approx. 4 %. Synchronic converters are not affected by voltage fluctuations in the primary rotary current mains and, in addition, safeguarded against short circuiting. Assimilation to the rated voltage can be effected by means of a potentiometer. Moreover, the converters are maintenance-free for 20,000 machine hours.
Secondary frequency is calculated according to the following formula:

$$if_2 = f_1 \cdot p_2 / p_1$$

f_1 = primary frequency of rotary current mains
f_2 = secondary frequency for high-frequency electric tools
p_1 = pole pair count of the drive motor
p_2 = pole pair count of the generator

Frequency converters with a power output in excess of 4 kVA should generally not be switched into the mains direct but connected by means of star delta switches. When they are switched in directly, a short-term current surge occurs. This surge could overload the lead wires on converters over 4 kVA and trigger the serial fuse. When a star delta switch is used, the current surge is reduced since current flow over the star switch is reduced to one third of what it would be with direct switching.

When a star delta switch is used, the coil of the drive motor is switched from the star (switch-on process) to the delta (operating position). It is imperative that a frequency converter that is to be operated on a 400 V mains line with a star delta switch is laid out for 400 V in the delta. If a converter of this kind is laid out for only 230 V in the delta, it can only be switched in to the 400 V mains directly over the star, that is to say, without star delta switching. When laying out a new installation, it is very important to take this into consideration.

Parallel operation of frequency converters

In order to increase the economics of the entire installation and to equalize load peaks, frequency converters can be switched in parallel. This results in optimal assimilation to the equipment being used. When frequency converters are linked to synchronic generators, no particular preparations are required to operate equipment in parallel even when power output levels differ.

Compensating for reactive current

Every inductive consumer is lumbered with a reactive current that performs no effective work, but only loads the electrical wiring. Frequency converters and high-frequency electric tools are also inductive consumers.

Compensation for reactive current on the secondary side of the converter requires considerable expenditure since each tool must be compensated separately. Depending on the number and the performance level of the individual high-frequency electric tools, a total output factor cos f of 0.5 to 0.85 is to be reckoned with. On the primary side of the frequency converter, the output factor cos f can be significantly improved if the magnetizing current from the drive motor and generator are compensated. Switching in correspondingly rated capacitors makes it possible to counteract the primary side reactance output of the converter almost entirely when idling and to compensate it under load to such an extent as to yield an output factor larger than cos φ = 0.9.

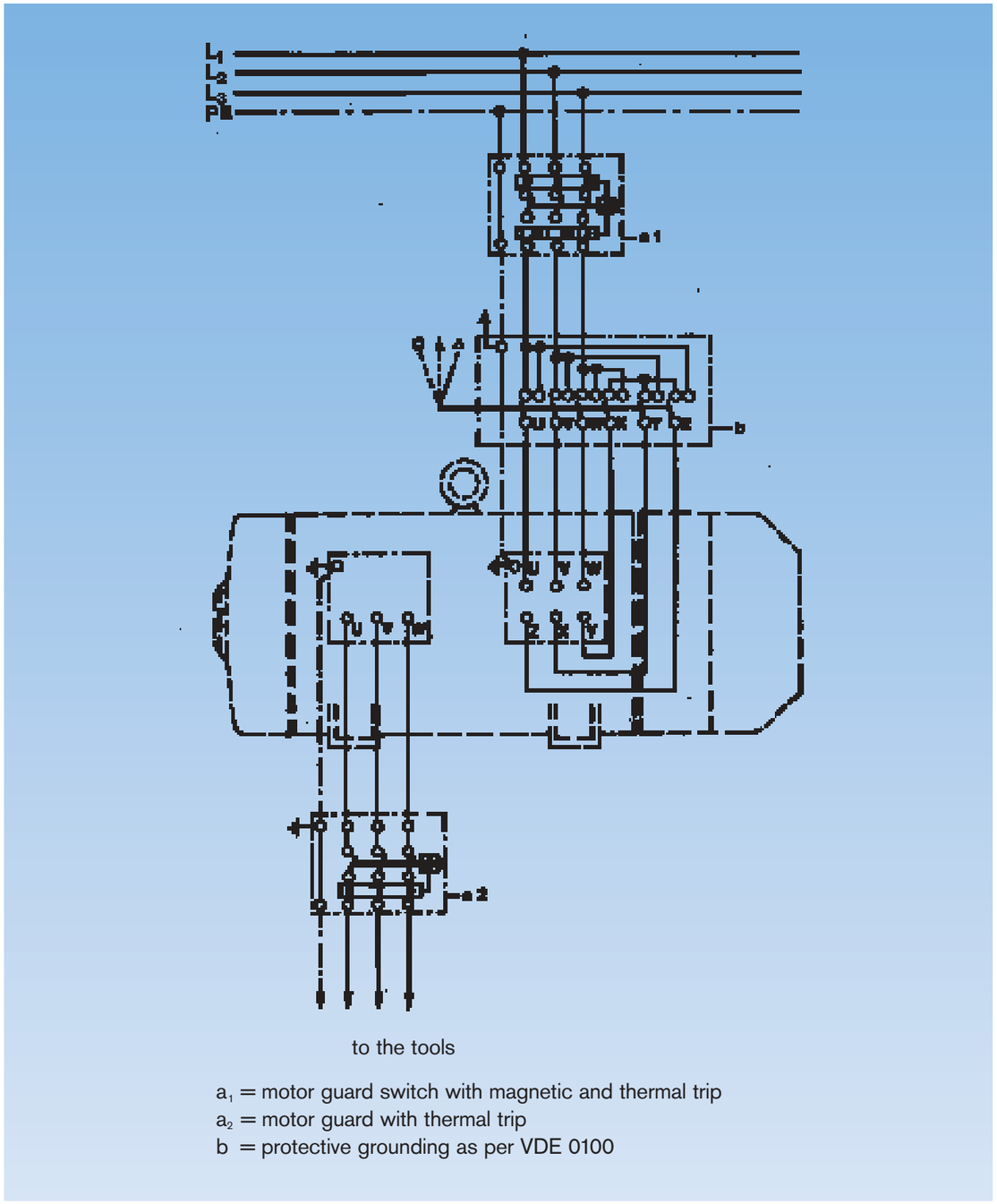

Fig. 3

ELECTRICAL SAFETY.

For high-frequency electric tools, electrical safety is assured by the protective conductor as per EN 50144 based on protection class I. When the secondary coil of the converter is switched in the star, the star point or neutral point is extended outwards. This neutral point is earthed (earthing resistance RB Œ 2 ohms) and connected to the metal housing of the electric tools by way of the protective conductors so that, at an operating voltage of 265 V, the dangerous voltage between phase and earth is only

$$\frac{265\ V}{1.73} = 153\ V$$

At operating voltages of 135 V or 72 V, on the other hand, the dangerous voltage is only

$$\frac{135\ V}{1.73} = 78\ V \quad \text{or}$$

$$\frac{72\ V}{1.73} = 42\ V$$

The effectiveness of the protective earthing is assured by using correspondingly robust plug fixtures of faultless electrical construction together with suitably resistant cables. Careful maintenance is equally important. The electric tool itself must, in its construction design, be capable of satisfying the stringent demands of industrial manufacture. Under normal circumstances, the description provided above, e.g. the protection measure “Earthing" as per VDE 0100 – 10 N is adhered to.

The possible protective measures may be classified and subdivided as follows:

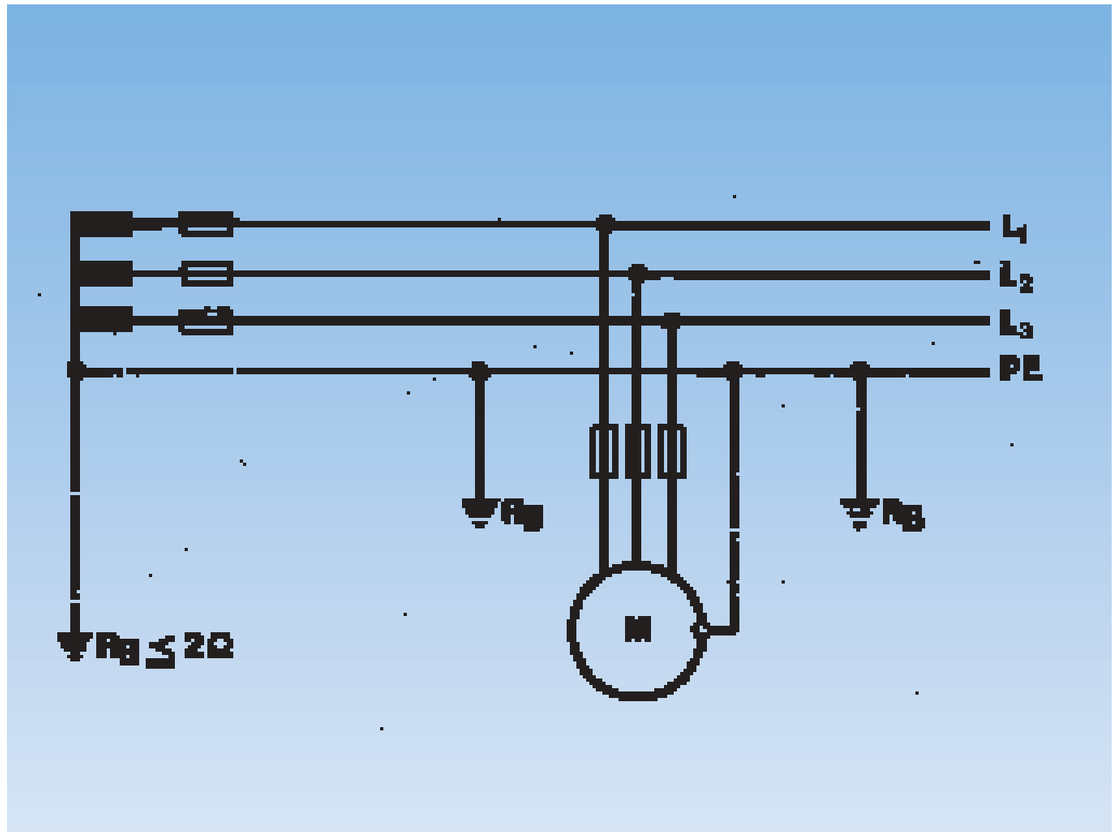

Fig. 4

1.0 protective measures without switching device
1.1 protective insulation (VDE 0100 – § 7 N)
1.2 low voltage, 42 V (VDE 0100 – § 8 N)
1.3 protective separation (VDE 0100 – § 14 N)
2.0 protective measures with switching device
2.1 protective earthing (VDE 0100 – § 9 N)
2.2 reduction to zero voltage (VDE 0100 – § 10 N)

In cases 2.1 and 2.2, switch-off is effected by fuses or corresponding thermo-magnetically triggered station circuit breakers.

The greatest possible degree of protection is reached by using fault current (FI) circuit breakers in addition.

Protective insulation as per 1.1 is not applied to high-frequency electric tools. Low voltage as per 1.2 finds application only in special cases in which, due to existing regulations, it cannot be avoided. Because of the high currents involved, this measure is very problematic with respect to cable cross-section, switches, plugs etc. when applied to the transmission of large outputs. Small screw drivers comprise an exception. In this case, one is better off using protective separation as per 1.3, according to which every tool must have its own separator-converter. Protective separation should be restricted to circumstances in which it is absolutely necessary.

Here we wish to focus on the protective measure “reduction to zero voltage as per 2.2" since it finds application primarily with high-frequency electric tools.The voltage reduction should continuously prevent excessive contact potential on installation parts that do not belong to the operating circuit (see Fig. 5). It requires direct earthing of a mid-point or star point conductor and is effected by connecting the installation parts that are to be protected either to the neutral conductor or to a special protective conductor that is in turn connected to the neutral conductor.

The protective measure “reduction to zero voltage" thus switches off defective installation parts since the inline fuse directly before the defective location is activated.

If the fuse is really to be activated, certain voltage reduction conditions as per VDE 0100 – § 10 N must be complied with. The most important voltage reduction requirement: The cross-section of the leads from the power

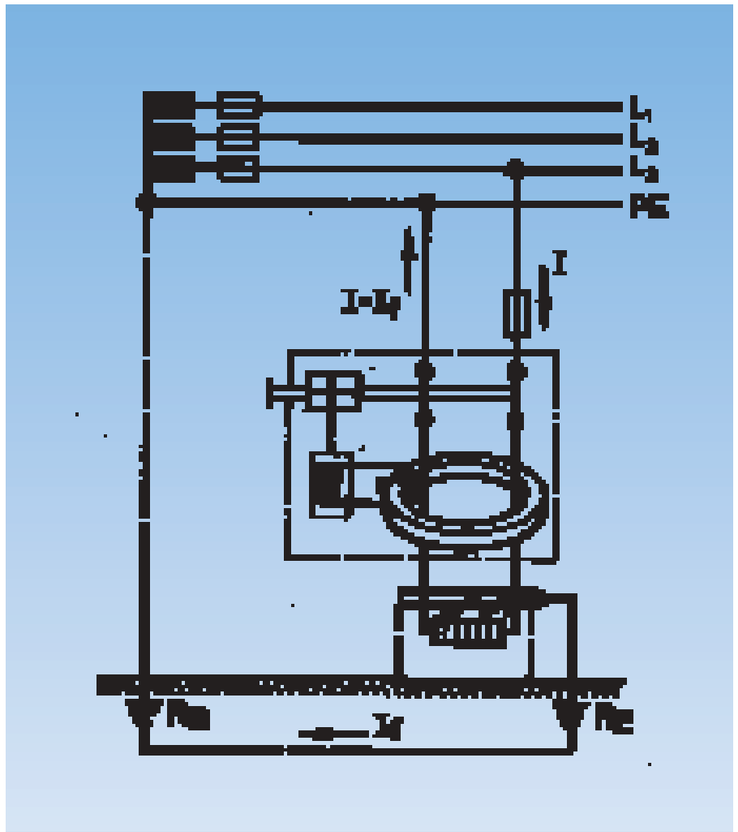

Fig. 5

generator or converter to the power consumer must be rated so that the switch-off current I_A of the next upline excess voltage protection unit according to table I VDE 0100 – § 9 N will at least be activated whenever a complete short circuit between an outer conductor and the neutral conductor occurs at any point in the circuitry.

One can also use fault current circuit breakers in addition, as shown in Fig. 6 (illustrated, for the sake of simplicity, for single-phase current). The FI circuit breaker receives its impulse from a current transformer through which all of the lead wires inclusive neutral conductor pass. The secondary coil of the current transformer supplies the activation current for the relay coil of the FI circuit breaker. The wires surrounded by the current transformer generate an alternating magnetic field in the core of the transformer if all of the currents do not neutralize each other in sum total (Fig. 7). During fault-free condition of the FI circuit breaker, the current flowing to the consumer is of exactly the same magnitude as that flowing back from it. Thus the two currents neutralize each other. There is no resulting induction onto the secondary coil of the current transformer, and the relay coil of the FI circuit breaker remains currentless (Fig. 6).

If there is a fault condition at the FI circuit breaker, a fault current flows off through the earth; the currents in the current transformer are no longer all mutually neutralized and induction results. Voltage is induced on the secondary side of the transformer.

The relay coil in the FI circuit breaker is activated (Fig. 7). 45 mA FI circuit breakers are available for 265 V/200 Hz rotary current. FI circuit breakers for rotary current at other voltage and frequency levels must be specially requested from appropriate manufacturers.

A schematic representation of an FI circuit breaker is provided in Fig. 8. In order to accommodate the regulations and specific conditions in other countries, Bosch offers high-frequency electric tools for various operating voltages (265 V, 135 V, 72 V, 42 V at 200 Hz; 200 V, 72 V, 42 V at 300 Hz). At the lower voltages, however, only a few high-frequency electric tools should be used in close proximity to the associated frequency converter. This is because the currents arising at high power levels and low voltage require cable cross-sections that would be too large.

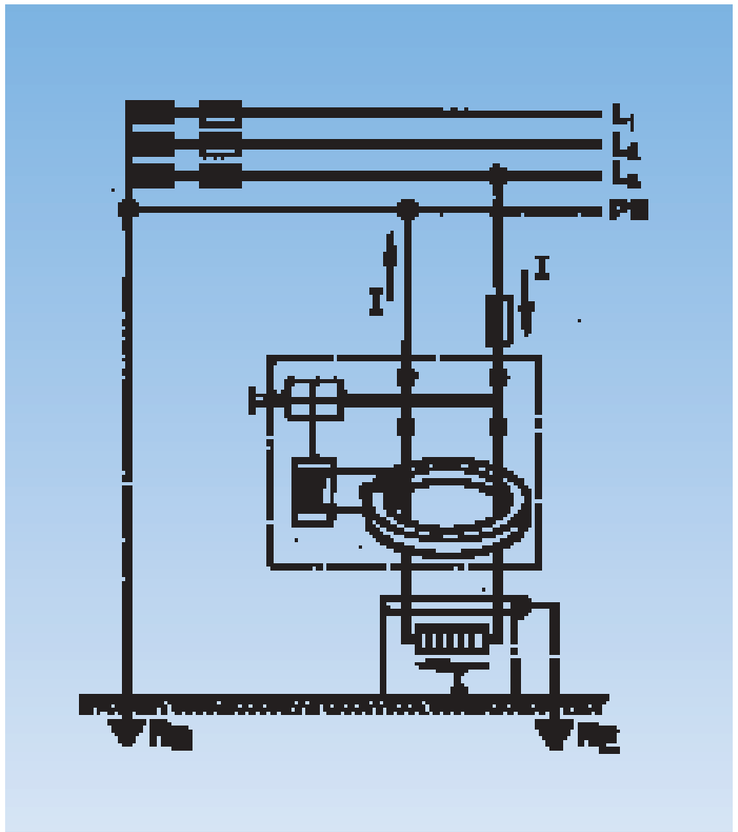

Fig. 7

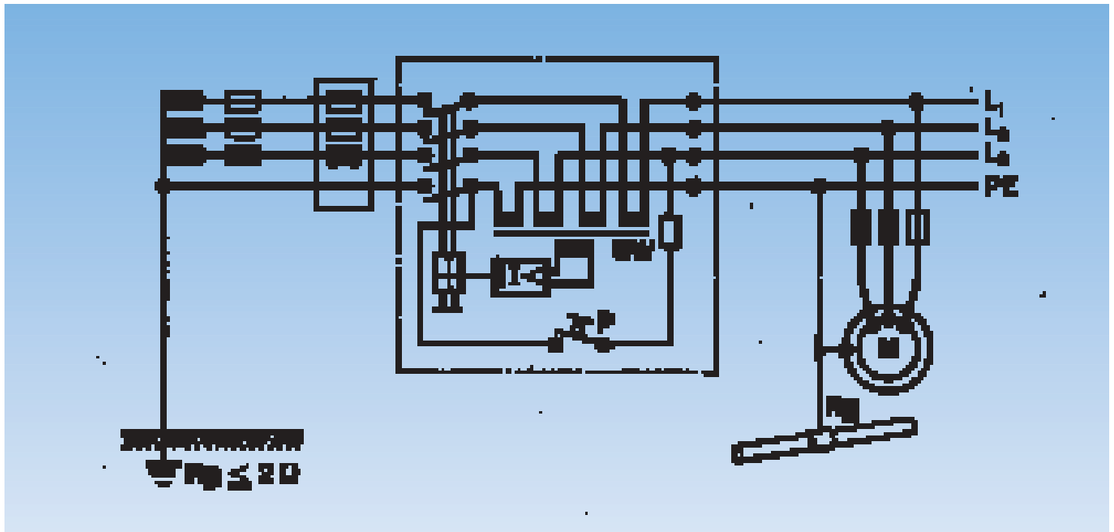

Fig. 6

THE DISTRIBUTION NETWORK.

The distribution network must not have any connection with the existing 50 Hz supply mains. For this reason, special CEE plugged connections as per DIN 49462/63 and DIN 49465 are prescribed for frequencies between 100 and 300 Hz. The housings for the plug, coupling box and wall socket are all green. The different shape of these plugged connections prevents existing 50 Hz plug units from being combined with either the plugs or the coupling boxes. Depending on practical requirements, either movable or fixed leads may be used for the distribution network between the frequency converter and the individual high-frequency electric tools.
The transmission of high power levels at low voltage is uneconomical in broadly distributed installations. There will either be high installation costs due to the large lead cross-sections required or else transformers will be needed to reduce the higher voltage at the place of tool operation.
Presupposing a constant level of power transmission, predefined voltage drop and equal lead length, the lead cross-section is inversely proportional to the square of the voltage, i.e. half the voltage will require a lead cross-section that is four times larger. The required distribution network cross-section can easily be determined by refering to Figs. 9 to 12. The admissible voltage drop of 5 % from ohmic resistance, the admissible temperature increase and the voltage drop from inductive resistance are all taken into account in calculating lead cross-sections. The illustrations are to be read as follows:

Fig. 8:
Cable cross-section as a function of voltage and lead length

Move horizontally from the left or the right, depending on the type of current, with the value of the power to be transmitted until the row intersects with the column for the voltage. Next, move vertically downwards until you intersect with the line for the lead length (simple length), then move horizontally again to the left or the right.

Fig. 9:
Cable cross-section as a function of voltage and performance factor

The cross-section calculated in Fig. 9 is now tested for temperature rise. Move horizontally from the left with the value of the power to be transmitted until you intersect with the column for the voltage. Next, move vertically downwards until you intersect with the line for the output factor cos φ; finally, move horizontally to the right to find the cross-section for the type of lead you are using.

Fig. 10:
Cable cross-section as a function of frequency and inductive resistance

If the cross-section for rotary current resulting from Figs. 9 and 10 exceeds 10 mm², you must then apply the precise calculated value to Fig. 10 in order to take the inductive voltage drop into account. Next, move vertically upwards from the horizontal base line until you intersect with the frequency curve. Then move horizontally to the left or right. The larger of the calculated values for the cable cross-section is decisive in determining the lead.

Inductive resistance is significant for large cross-sections. These, in turn, are necessary at low voltages or high frequencies. Calculation of the curve in Fig. 11 was based on an assumed output factor cos φ of 0.7 for the consumer.

For single phase alternating current installations with an output factor cos φ = 1, inductive resistance can be ignored even for large cable cross-sections.

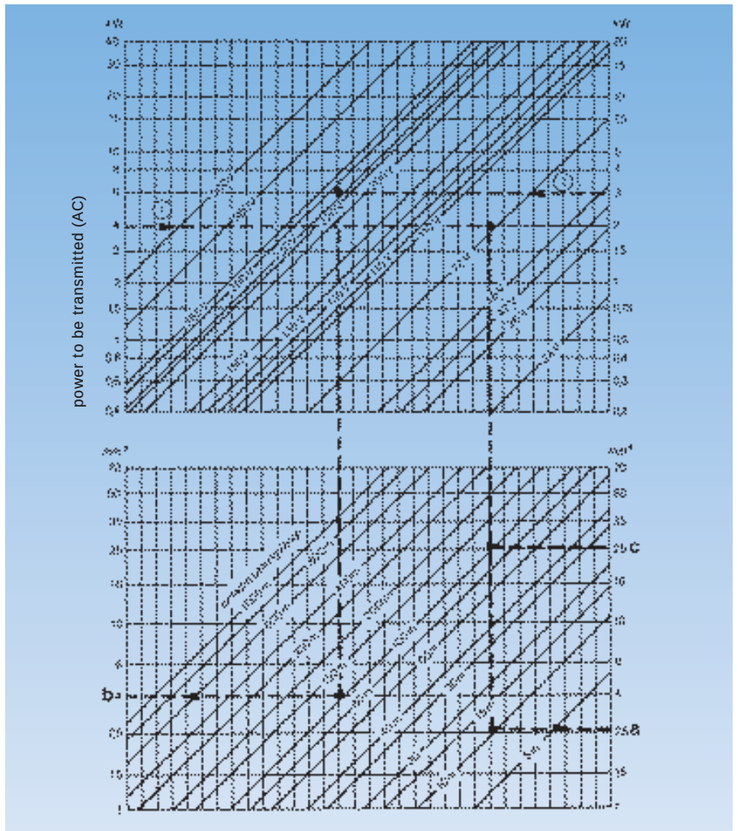

Fig. 8

Example a:
Transmission of 4 kW, 72 V rotary current, cos φ = 0.8, lead length (simple) 10 m. Cable cross-section calculated in accordance with Fig. 9: 2.75 mm².
Cable cross-section calculated in accordance with Fig. 10: 4.8 mm² (selected cross-section: 6 mm²)
The cable cross-section of 2.75 mm² calculated on the basis of Figs. 9 and 10 is not sufficient; the cable would get too hot. Testing in accordance with Fig. 11 is not necessary since the cross-section is less than 10 mm².

Example b:
Transmission of 3 kW, 220 V single-phase alternating current, cos φ = 0.9, lead length (simple): 100 m. Cable cross-section calculated in accordance with Fig. 9: 4 mm². Cable cross-section calculated in accordance with Fig. 10: 0.9 mm². According to Fig. 9, a crosssection of 4 mm² is required. This value is decisive since Fig. 10 yields a value of only 0.9 mm² and there is no danger of overheating.

Example c:
As in "Example a", but at 200 Hz rotary current with lead length of 100 m. The cable cross-section calculated in accordance with Fig. 9 is 27 mm². This value must be tested in accordance with Fig. 11. In this example, the larger cross-section of 50 mm² must be selected.

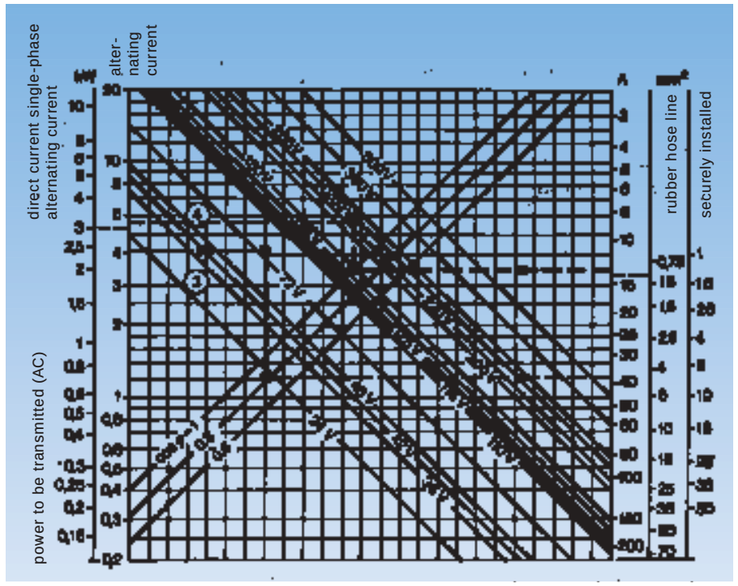

Fig. 9

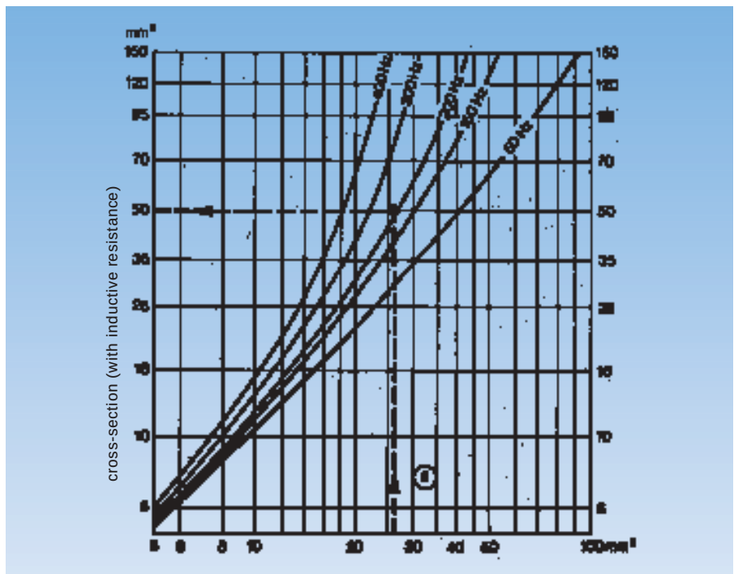

Fig. 10

Bosch Customer Support Services is always available to answer questions on the use of high frequency tools and the area of high frequency technology in general.

BOSCH SERVICE QUALITY.

THE BOSCH CD-ROM SERVICE INFORMATION SYSTEM

provides information about Bosch Power Tools over the past 25 years – including spare parts lists and exploded drawings, thus saving time and money on spare parts management.

BOSCH FAX SERVICE

offers direct, cost-effective access to important service documents such as spare parts lists, exploded drawings and forms. Information can be accessed 24 hours a day – even on Sundays and bank holidays.

BOSCH SPARE PARTS SERVICE

guarantees in 99% of all cases that the desired spare part is available ex stock, allowing work to continue quickly.

BOSCH RECYCLING SERVICE

offers environmental protection that anybody can actively take part in. Bosch Industrial Tools, cordless tools and battery packs that are past their service life are taken back at no charge via specialist retailers or directly and sent for recycling.

BOSCH
Ideas that work.

Robert Bosch GmbH
Power Tool Division
Sales/Marketing Production Tools
PO Box 10 01 56
D-70745 Leinfelden-Echterdingen, Germany
e-mail: ProductionTools@de.bosch.com
www.boschproductiontools.com

3 609 996 343 (07.04) Printed in Federal Republic of Germany – Imprimé en République Fédérale d'Allemagne – Subject to technical alterations. No liability can be accepted for printing errors.