Beckett®

Water Gardening

Pond Liner

PVC
17 ft x 12 ft
Finished Pond Size 13ft x 8ft x 1.5ft D

Item: 7011710
Model: PL1322

Product Features

- For small ponds up to 13ft x 8ft x 1.5ft D
- Flexible, easy to install, and UV stable
- Safe for fish and plants

Ponds up to 13ft x 8ft x 1.5ft

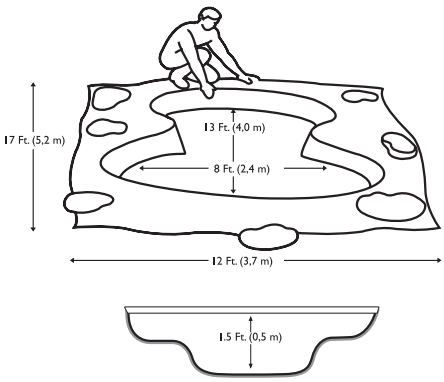

Specifications & Performance

Application	Outdoor Ponds
Material	20 mil PVC
Size	17”L x 12”W
Finished Pond Size	13ft x 8ft x 1.5ft D
Net Weight	31 lbs.
UPC	052309701171
Master Pack	1

©2006 Beckett Corporation all rights reserved
Irving, Texas • 1-888-BECKETT
www.888beckett.com