AIR HOGS™

BOEING DELTA™ AIR ROCKET

INSTRUCTIONS

Contents
1 Launcher/Accumulator
1 Pumping Station
2 Rockets

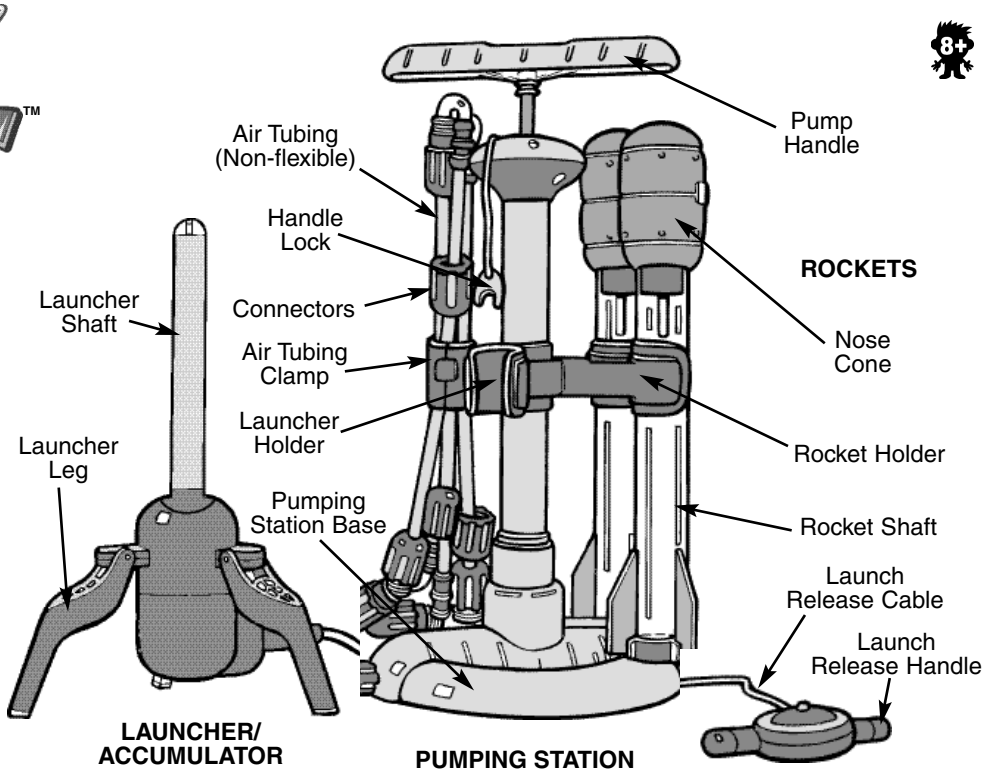

PREPARING FOR LAUNCH

STEP 1

Remove the LAUNCHER/ ACCUMULATOR from the LAUNCHER HOLDER.

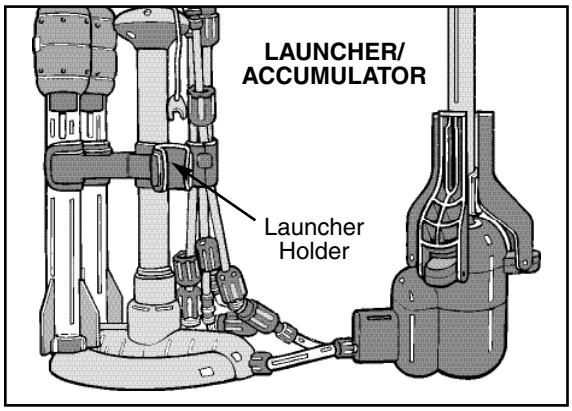

STEP 2

Fold the LAUNCHER LEGS down so that it can stand on the ground.

IMPORTANT:
The LAUNCHER LEGS must be level and placed on a flat surface or the ROCKET will not launch.

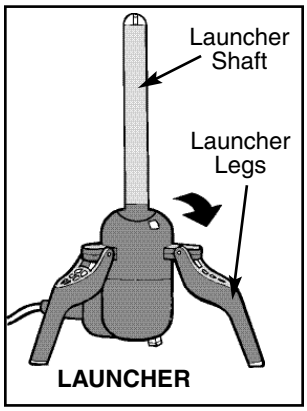

STEP 3

Remove HANDLE LOCK from its mounting area under the PUMP HANDLE.

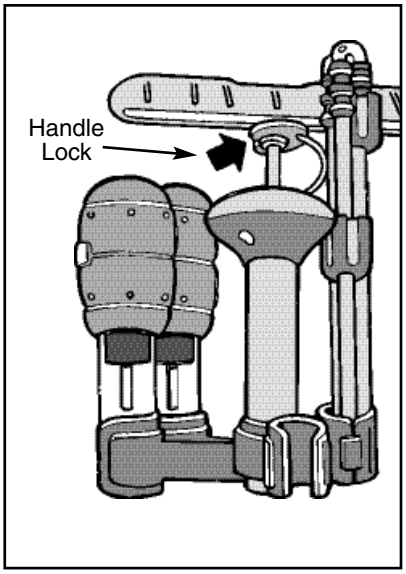

STEP 4

Unlock AIR TUBING CLAMP so that the AIR TUBING (Non-flexible) can be removed.

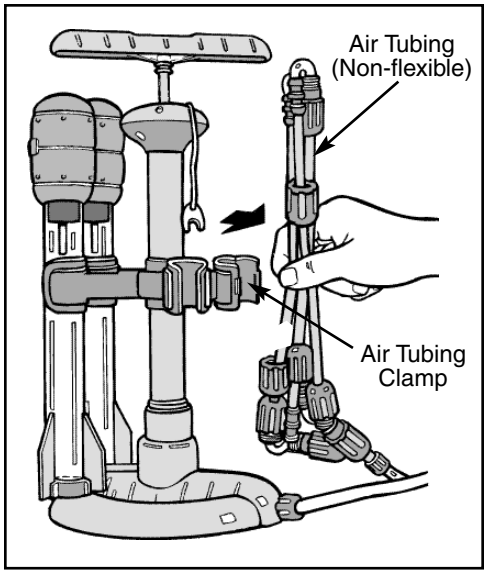

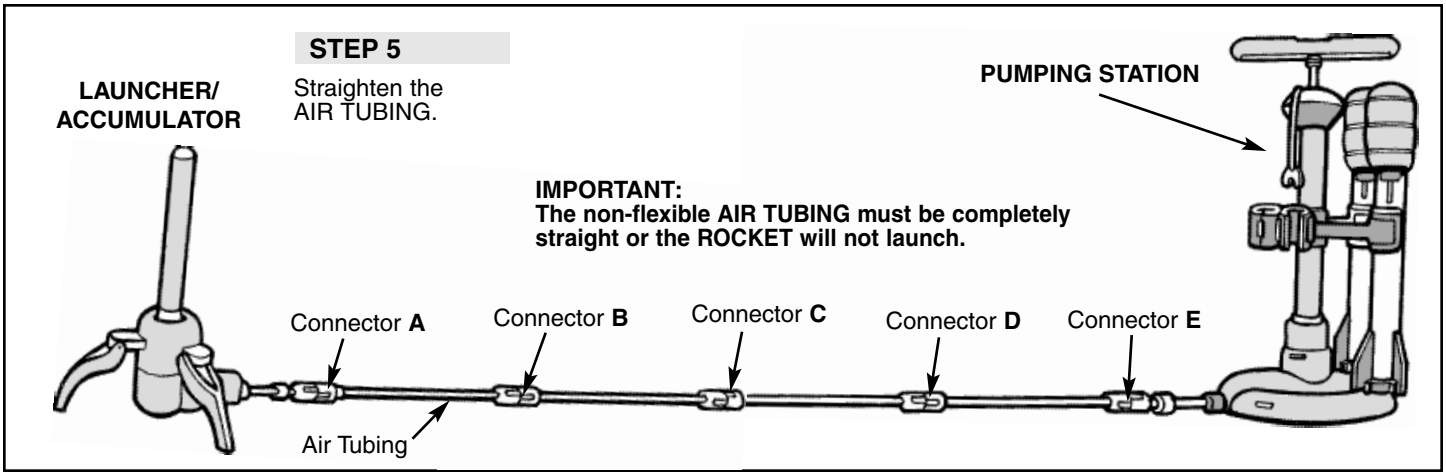

STEP 6

Screw together each of the CONNECTORS (**A,B,C,D** and **E**).

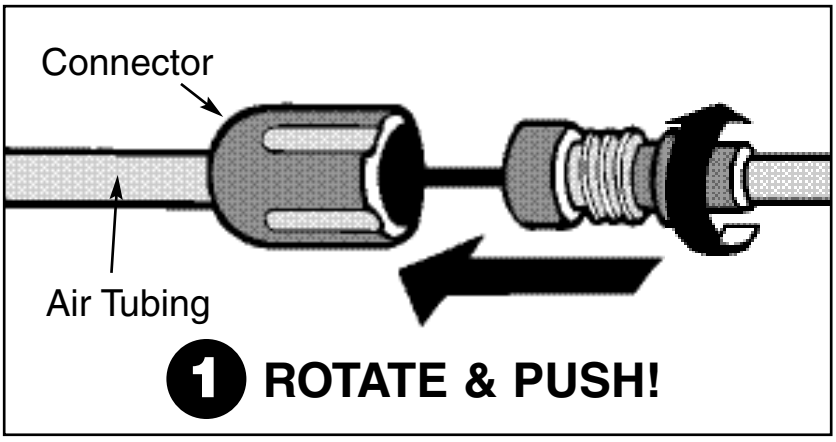

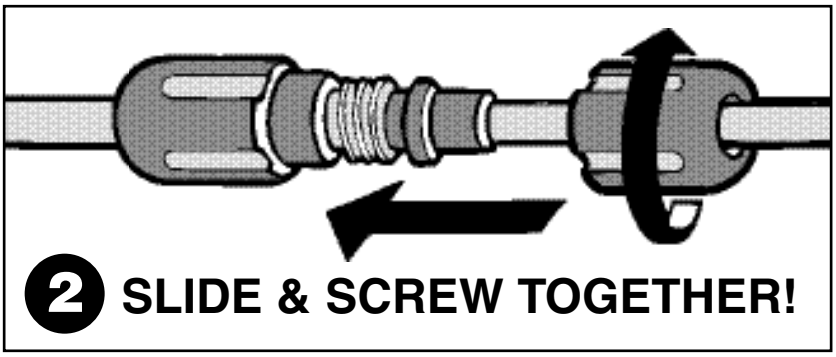

IMPORTANT:

- **Before screwing together each CONNECTOR, be sure that the LAUNCH RELEASE CABLE is tightened. Loose wire can be tightened by pulling the LAUNCH RELEASE HANDLE.**
- **For easier assembly, the AIR TUBING should be rotated when it is being inserted into the CONNECTOR.**

LAUNCHING INSTRUCTIONS

STEP 1

Push the LAUNCHER SHAFT down until it **"CLICKS"**.

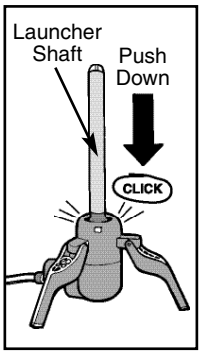

STEP 2

Unclip ROCKET from its ROCKET HOLDER.

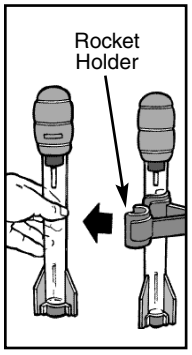

STEP 3

Place the ROCKET on the LAUNCHER SHAFT.

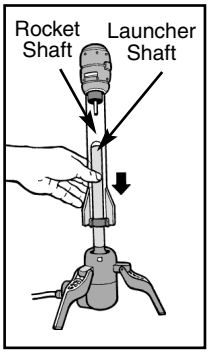

STEP 4

Push the ROCKET down until the bottom of the ROCKET touches the RED LINE.

IMPORTANT: If ROCKET is not pushed down all the way, the ROCKET WILL NOT launch.

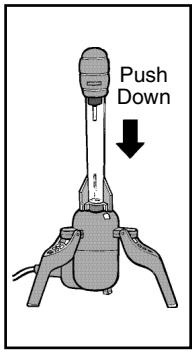

LAUNCHING INSTRUCTIONS continued

STEP 4

With both feet on the PUMPING STATION BASE, use the PUMP HANDLE to pump 15 times. Use only the pump that comes with your BOEING DELTA™ AIR ROCKET.

NOTE: For safety, this pump has a unique built-in pressure relief valve to release air or whistle if the LAUNCHER/ ACCUMULATOR is full.

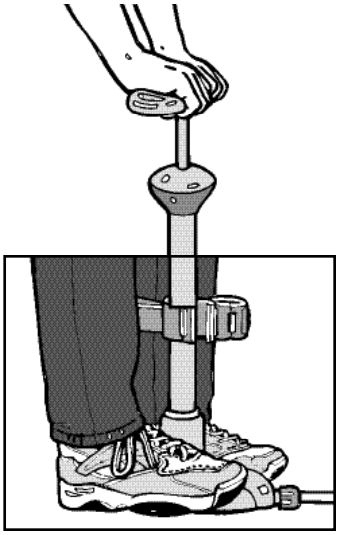

STEP 5

Ensure that people and animals are not within a four foot radius of the rocket.

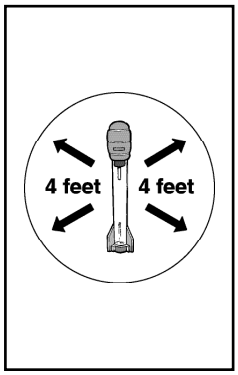

STEP 6

While holding the PUMPING STATION steady, slowly pull the LAUNCH RELEASE HANDLE from the PUMPING STATION and watch your BOEING DELTA™ AIR ROCKET reach heights of up to 120 feet.

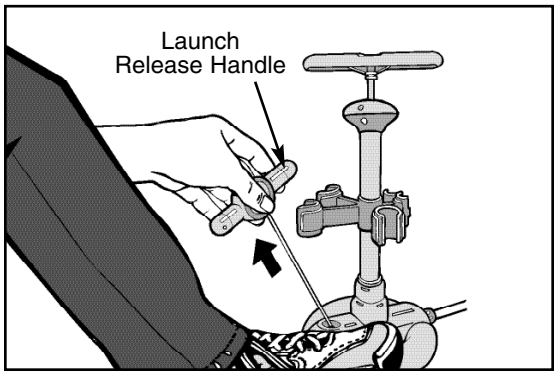

STORING YOUR BOEING DELTA™ AIR ROCKET

STEP 1

Store the ROCKETS in the ROCKET HOLDERS.

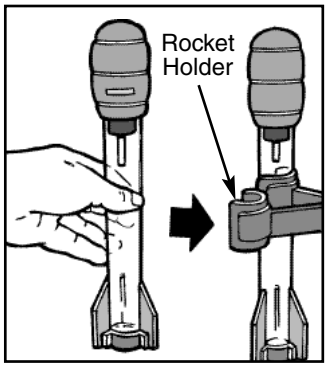

STEP 2

Unscrew all the CONNECTORS on the AIR TUBING.

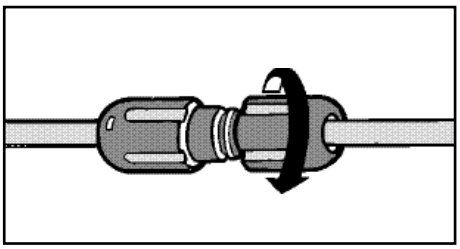

STEP 3

Fold the AIR TUBING and store it vertically in the AIR TUBING CLAMP. Snap the clamp closed.

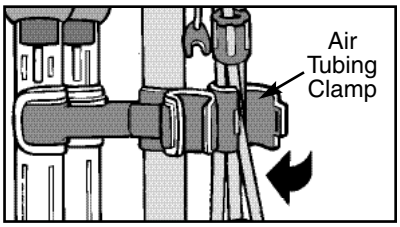

STEP 4

Fold the LAUNCHER LEGS back up on the LAUNCHER/ ACCUMULATOR and secure it to the PUMPING STATION by clipping the LAUNCHER SHAFT into the LAUNCHER HOLDER.

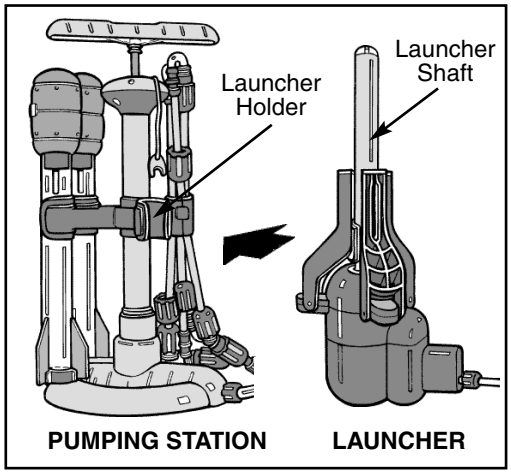

STEP 5

Attach HANDLE LOCK to its mounting area under the PUMP HANDLE.

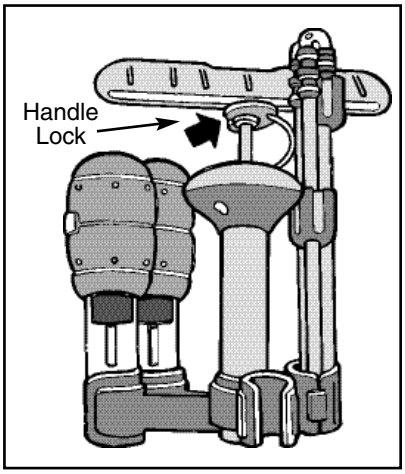

IMPORTANT SAFETY INFORMATION

Keep clear from face and eyes. Do not launch at people or animals. Use caution; make sure people around you know you are playing with AIR HOGS™. Recommended for use in wide open areas. Do NOT fly near overhead wires, trees, buildings, or other obstructions. Point toy away from face when launching. Do NOT fly in rain, sleet, electrical storms, or other adverse weather conditions.

ADULT SUPERVISION RECOMMENDED.

TROUBLE SHOOTING GUIDE

PROBLEM	CAUSE	SOLUTION
ROCKET does not launch.	1. No air in LAUNCHER/ ACCUMULATOR.	1. Use the PUMP HANDLE and pump 15 times before pulling the LAUNCH RELEASE HANDLE.
	2. LAUNCHER/ACCUMULATOR is not positioned on a level surface.	2. Re-adjust the LAUNCHER LEGS and make sure that the LAUNCHER is sitting on a level surface. If the LAUNCHER is tilted more than 15° to any side, the rocket WILL NOT LAUNCH.
	3. AIR TUBING and/or CONNECTORS are not completely straight.	3. Ensure that all CONNECTORS are securely fastened, and that the AIR TUBING is in a straight line with the PUMPING STATION before launching.
	4. CONNECTORS on AIR TUBING not properly assembled/tightened.	4. Unscrew each CONNECTOR and repeat Step 6 in the "Preparing to Launch" section. Remember to tighten any loose cable before screwing the CONNECTORS together.
	5. LAUNCHER SHAFT not locked in place for launch.	5. Push the LAUNCHER SHAFT down until it **CLICKS.**
	6. LAUNCHER SHAFT is JAMMED.	6. The LAUNCHER SHAFT may have become jammed if it was pushed TOO HARD when you tried to **CLICK** it into position for launch. To un-jam it, **1.** ASK AN ADULT FOR HELP. **2.** Raise up the 3 LAUNCHER LEGS, **3.** remove ROCKET from launcher shaft, **4.** have the child pull on the LAUNCH RELEASE TRIGGER at the same time as the ADULT pulls up on the LAUNCHER SHAFT to un-jam it.

WARRANTY (U.S.A.)

Spin Master Ltd. warrants to the original consumer purchaser, that this product is thoroughly tested and inspected before shipment and is guaranteed to be free of factory defects in materials and workmanship for thirty (30) days (unless specified in alternate warranties) from the date of purchase.

In the event of such a defect within the warranty period, Spin Master Ltd., at our sole option, will repair or replace the product or provide you with another product of equal value. Repair or replacement shipment is free of charge. Shipping replacement may take 2 to 6 weeks, depending on customer's location.

In the event of a defect covered under this warranty, please call the toll-free number listed below. Many problems can be solved in this manner. If necessary, you will be instructed to return the defective part or unit, packed securely, postage prepaid and insured by the customer, to the address below. Enclose your name, address, dated sales receipt, and a brief explanation of the defect. There may be an additional handling charge if you send the entire toy.

The warranty is valid if and only if the product has been operated in accordance with the instructions. This warranty does not cover worn or defective batteries, damage resulting from neglect, unauthorized modification, accident, misuse, abuse, any action or omission which constitutes a deviation from the instructions or from the use of accessories or parts not manufactured by Spin Master Ltd. If the product is returned without a dated sales receipt the product is excluded from coverage under this warranty.

Spin Master Ltd.'s liability for defects in material and workmanship under this warranty shall be limited to repair or replacement, at our sole option, and in no event shall we be responsible for accidental, consequential. or contingent damages (except in those states that do not allow this exclusion or limitation) or refunds. This warranty is exclusive, and is made in lieu of any express or implied warranty. This warranty is valid only for products sold in the U.S.A. This warranty gives you specific legal rights and you may have other rights, which vary from state to state. Some states do not allow the exclusion of incidental or consequential damages, so the above exclusions or limitations may not apply to you.

Spin Master Ltd. reserves the right to improve the design of any product without assuming any obligation to modify any product previously manufactured.

If you need assistance, please contact our Customer Care Center (below) for help.

SPIN MASTER LTD.
CUSTOMER CARE CENTRE
450 Front Street West
Toronto, Ontario M5V 1B6 CANADA
TOLL-FREE NUMBER 1-800-622-8339
(valid only in North America)
Hours: 8:00 A.M. – 5:00 P.M.
Eastern Time: Monday – Friday.

Air Hogs TM is a trademark of Spin Master Ltd.
© 2003 Spin Master Ltd. All rights reserved.
Produced under license from Boeing Management Company.
Delta and Boeing are among the trademarks owned by Boeing.
Manufactured for and distributed by Spin Master Ltd.

MADE IN CHINA
Item #45044 REV 4 U.S. English