PRO-FORM® XP 650E

Model No. 831.29606.0
Serial No. _____

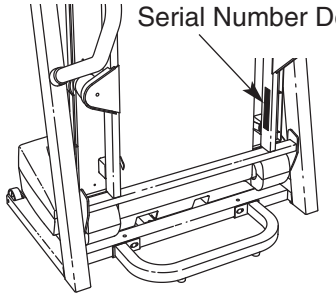

TREADMILL EXERCISER

User's Manual

- **Assembly**
- **Operation**
- **Maintenance**
- **Part List and Drawing**

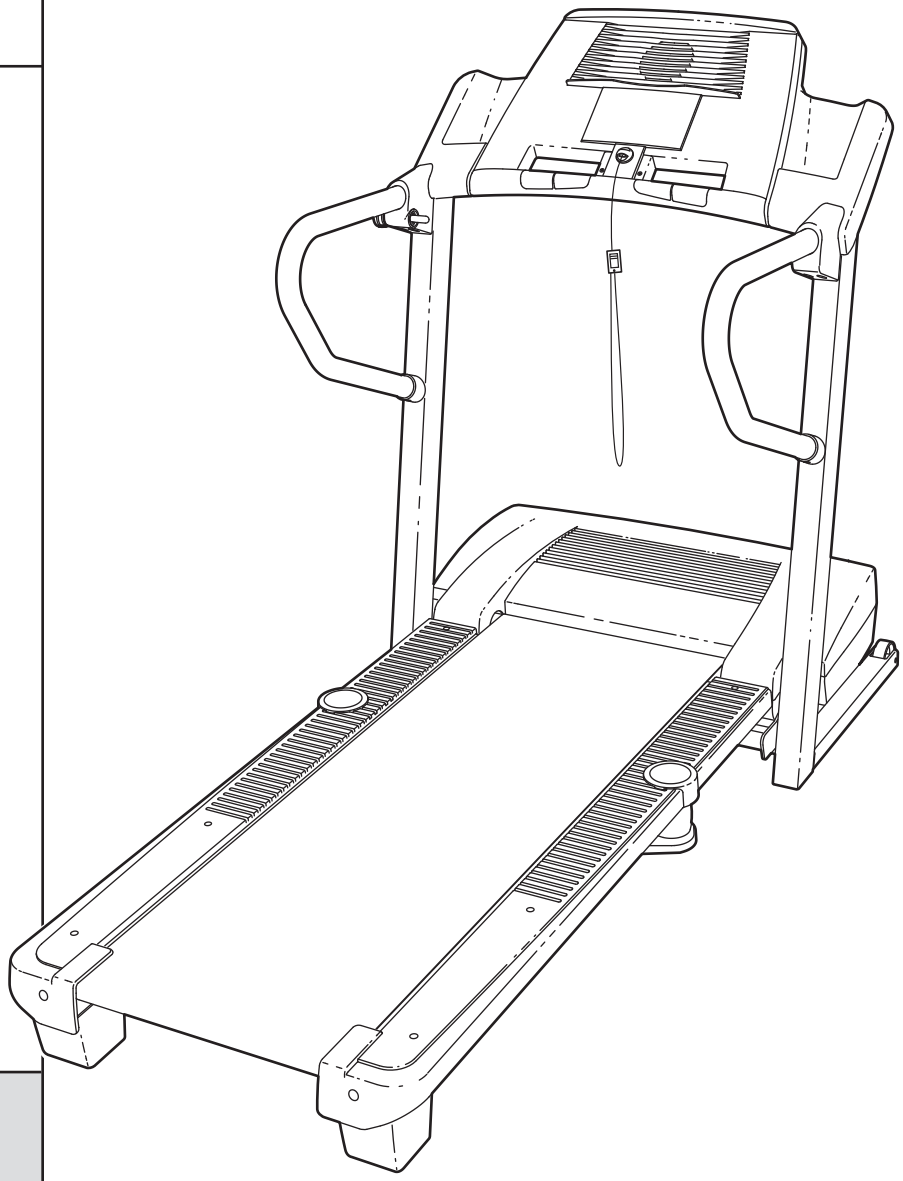

⚠ CAUTION

Read all precautions and instructions in this manual before using this equipment. Save this manual for future reference.

Sears, Roebuck and Co., Hoffman Estates, IL 60179

TABLE OF CONTENTS

IMPORTANT PRECAUTIONS 2
BEFORE YOU BEGIN 4
ASSEMBLY 5
OPERATION AND ADJUSTMENT 8
HOW TO FOLD AND MOVE THE TREADMILL 21
TROUBLESHOOTING 22
CONDITIONING GUIDELINES 24
PART LIST 26
ORDERING REPLACEMENT PARTS . . . . . Back Cover
FULL 90 DAY WARRANTY . . . . . Back Cover

Note: An EXPLODED DRAWING is attached in the center of this manual.

IMPORTANT PRECAUTIONS

⚠ WARNING: To reduce the risk of burns, fire, electric shock, or injury to persons, read the following important precautions and information before operating the treadmill.

1. **It is the responsibility of the owner to ensure that all users of this treadmill are adequately informed of all warnings and precautions.**
2. **Use the treadmill only as described.**
3. **Place the treadmill on a level surface, with at least eight feet of clearance behind it and two feet on each side. Do not place the treadmill on any surface that blocks air openings. To protect the floor or carpet from damage, place a mat under the treadmill.**
4. **Keep the treadmill indoors, away from moisture and dust. Do not put the treadmill in a garage or covered patio, or near water.**
5. **Do not operate the treadmill where aerosol products are used or where oxygen is being administered.**
6. **Keep children under the age of 12 and pets away from the treadmill at all times.**
7. **The treadmill should not be used by persons weighing more than 300 pounds.**
8. **Never allow more than one person on the treadmill at a time.**
9. **Wear appropriate exercise clothes when using the treadmill. Do not wear loose clothes that could become caught in the treadmill. Athletic support clothes are recommended for both men and women. *Always wear athletic shoes. Never use the treadmill with bare feet, wearing only stockings, or in sandals.***
10. **When connecting the power cord (see page 8), plug the power cord into a surge suppressor (not included) and plug the surge suppressor into a grounded circuit capable of carrying 15 or more amps. No other appliance should be on the same circuit. Do not use an extension cord.**
11. **Use only a single-outlet surge suppressor that meets all of the specifications described on page 8. To purchase a surge suppressor, see your local Sears store or call 1-800-366-7278 and order part number 146148, or see your local electronics store.**
12. **Failure to use a properly functioning surge suppressor could result in damage to the control system of the treadmill. If the control system is damaged, the walking belt may change speed, accelerate, or stop unexpectedly, which may result in a fall and serious injury.**

13. Keep the power cord and the surge suppressor away from heated surfaces.

14. Never move the walking belt while the power is turned off. Do not operate the treadmill if the power cord or plug is damaged, or if the treadmill is not working properly. (See TROUBLESHOOTING on page 22 if the treadmill is not working properly.)

15. Never start the treadmill while you are standing on the walking belt. Always hold the handrails while using the treadmill.

16. The treadmill is capable of high speeds. Adjust the speed in small increments to avoid sudden jumps in speed.

17. Never leave the treadmill unattended while it is running. Always remove the key, unplug the power cord and move the reset/off circuit breaker to the off position when the treadmill is not in use. (See the drawing on page 4 for the location of the circuit breaker.)

18. Do not attempt to raise, lower, or move the treadmill until it is properly assembled. (See ASSEMBLY on page 5, and HOW TO FOLD AND MOVE THE TREADMILL on page 21.) You must be able to safely lift 45 pounds (20 kg) to raise, lower, or move the treadmill.

19. When folding or moving the treadmill, make sure that the storage latch is fully closed.

20. When using iFIT.com programs, an electronic "chirping" sound will alert you when the speed and/or incline of the treadmill is about to change. Always listen for the "chirp" and be prepared. In some instances, the speed and/or incline may change before the personal trainer describes the change.

21. When using iFIT.com programs, you can manually override the speed and incline settings by pressing the speed and incline buttons. However, when the next "chirp" is heard, the speed and/or incline will change to the next settings of the program.

22. Remove iFIT.com CDs and videos from your CD player and VCR and disconnect your MP3 player when you are not using them.

23. Inspect and properly tighten all parts of the treadmill regularly.

24. Never insert any object into any opening.

25. **DANGER:** Always unplug the power cord immediately after use, before cleaning the treadmill, and before performing the maintenance and adjustment procedures described in this manual. Never remove the motor hood unless instructed to do so by an authorized service representative. Servicing other than the procedures in this manual should be performed by an authorized service representative only.

26. This treadmill is intended for in-home use only. Do not use this treadmill in a commercial, rental, or institutional setting.

27. The decals shown below have been placed on your treadmill. If a decal is missing, or if it is not legible, please call toll-free 1-888-533-1333 and order a free replacement decal. Apply the decal in the location shown. Note: The decals are not shown at actual size.

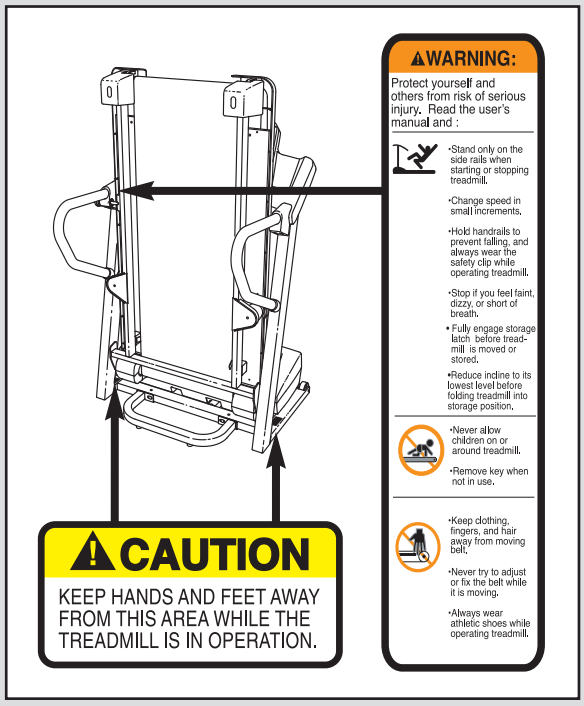

SAVE THESE INSTRUCTIONS

WARNING: Before beginning this or any exercise program, consult your physician. This is especially important for persons over the age of 35 or persons with pre-existing health problems. Read all instructions before using. Sears assumes no responsibility for personal injury or property damage sustained by or through the use of this product.

BEFORE YOU BEGIN

Thank you for selecting the revolutionary PROFORM® XP 650E treadmill. The XP 650E treadmill offers an impressive array of features designed to make your workouts at home more enjoyable and effective. And when you're not exercising, the unique XP 650E treadmill can be folded up, requiring less than half the floor space of other treadmills.

For your benefit, read this manual carefully before using the treadmill. If you have questions after reading this manual, call 1-800-4-MY-HOME® (1-800-469-4663).To help us assist you, please note the product model number and serial number before calling. The model number of the treadmill is 831.29606.0. The serial number can be found on a decal attached to the treadmill (see the front cover of this manual for the location).

Before reading further, please review the drawing below and familiarize yourself with the labeled parts.

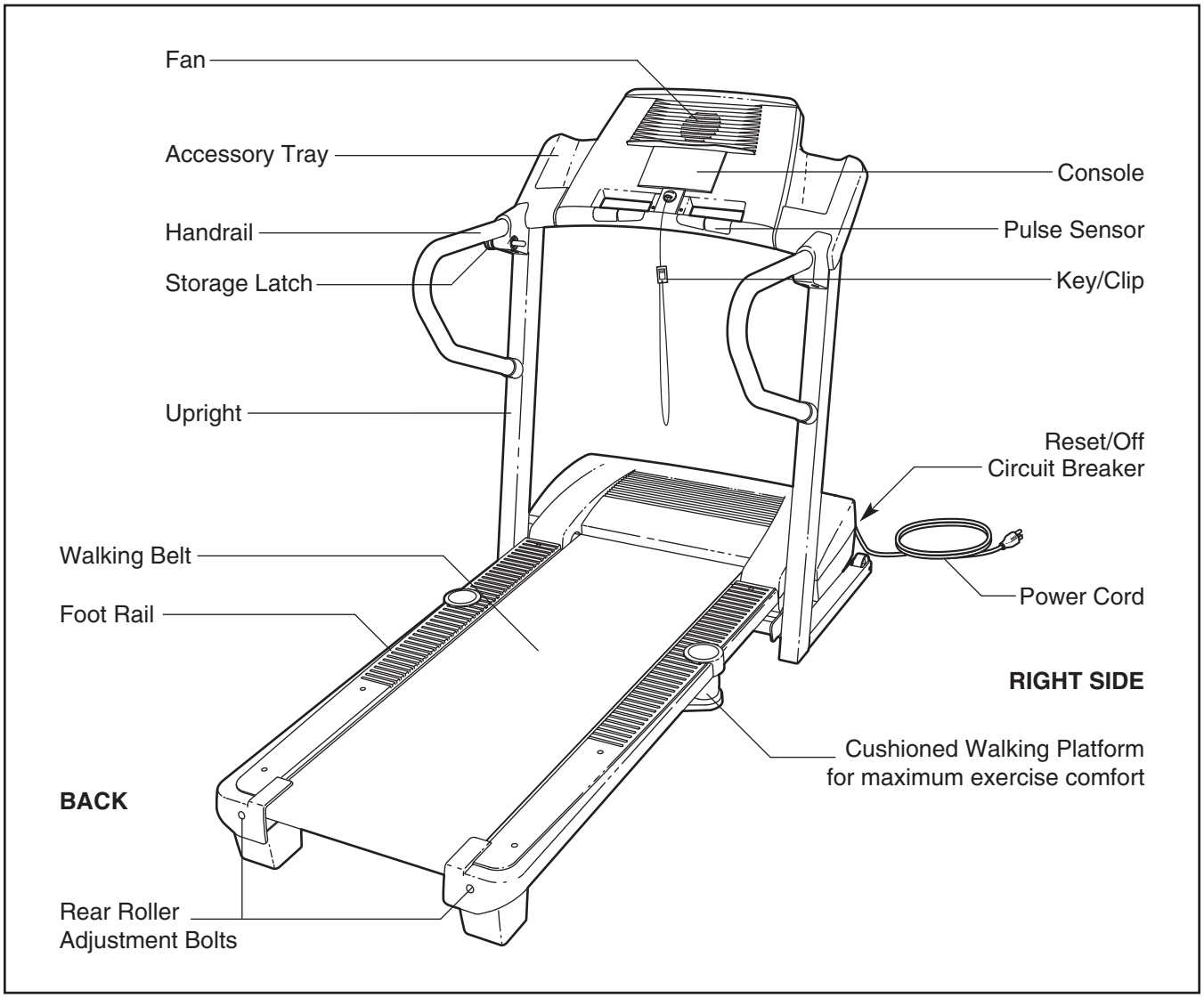

ASSEMBLY

Make sure that the power cord is unplugged. Assembly requires two persons. Set the treadmill in a cleared area and remove all packing materials. Do not dispose of the packing materials until assembly is completed. Note: The underside of the treadmill walking belt is coated with high-performance lubricant. During shipping, a small amount of lubricant may be transferred to the top of the walking belt or the shipping carton. This is a normal condition and does not affect treadmill performance. If there is lubricant on top of the walking belt, simply wipe off the lubricant with a soft cloth and a mild, non-abrasive cleaner.

Assembly requires the included allen wrenches and your own phillips screwdriver , wire cutters , and adjustable wrench .

Use the drawings below to identify the assembly hardware. The number in parentheses below each drawing is the key number of the part, from the PART LIST on pages 26 and 27. The number after the parentheses shows the quantity needed for assembly. Note: If a part is not in the parts bag, check to see if it is preattached to one of the parts to be assembled. **If a part is missing, call toll-free 1-888-533-1333.**

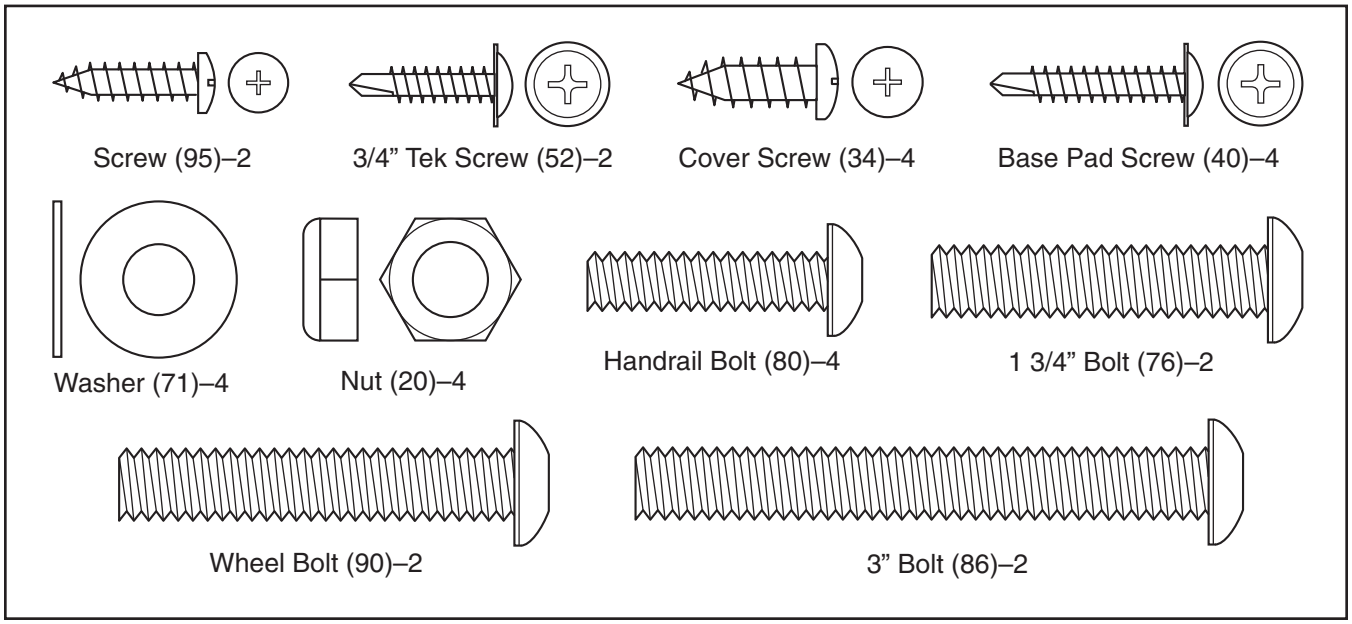

1. With the help of a second person, raise the Uprights (97) to a vertical position.

   Insert the tab on one of the Handrail Brackets (81) into the indicated slot in the left Upright (97). Attach the Handrail Bracket with a 3/4” Tek Screw (52).

   Identify the Left Handrail Cover (27), which has holes in the sides. Slide the Left Handrail Cover onto the upper end of one of the Handrails (43). Slide one of the Handrail Caps (105) onto the lower end of the Handrail. Make sure that the small hole in the Handrail Cap is toward the bend in the Handrail.

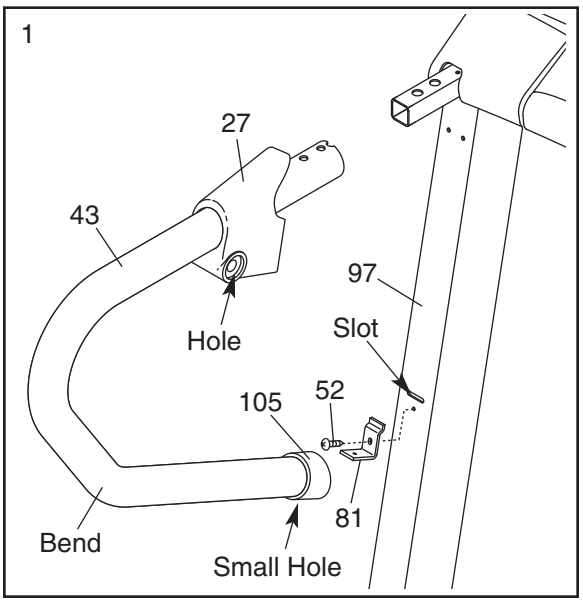

2. Slide the left Handrail (43) onto the post on the left Upright (97) and onto the left Handrail Bracket (81). Finger tighten two Handrail Bolts (80) into the left Handrail and the post; **do not fully tighten the Handrail Bolts yet.**

   Set the Handrail Cap (105) against the left Upright (97). Tighten a Screw (95) into the bottom of the Handrail Cover and into the left Handrail Bracket (81). Then, **tighten the two Handrail Bolts (80).**

   Slide the Left Handrail Cover (27) against the Console Base (101). Tighten two Cover Screws (34) into the Left Handrail Cover and the left Upright (97); **be careful not to overtighten the Cover Screws.**

   Repeat steps 1 and 2 on the right side (not shown).

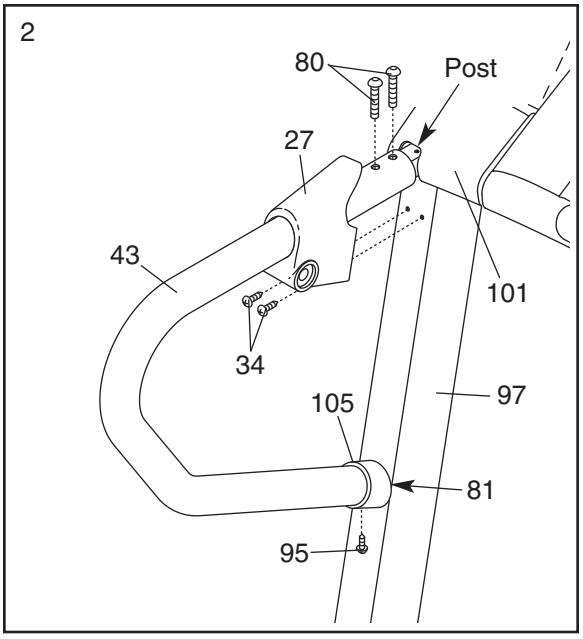

3. Remove the knob from the pin. Make sure that the collar and the spring are on the pin. Next, insert the pin into the Left Handrail Cover (27), and tighten the knob back onto the pin.

   Place the treadmill in the storage position (see HOW TO FOLD THE TREADMILL FOR STORAGE on page 21).

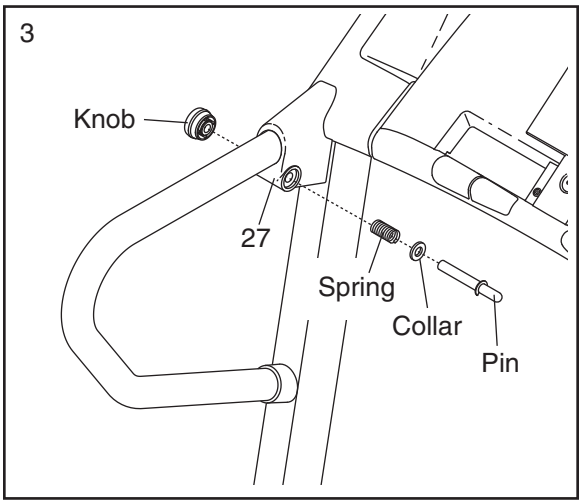

4 Orient the U-base (89) so the Base Pads (99) are underneath it, and position the U-base against the base of the Uprights (97) as shown. Insert two 1 3/4" Bolts (76) with Washers (71) into the base of the Uprights and the U-base; if necessary, tip the Uprights forward as you insert the Bolts. Finger tighten the Bolts.

   Next, insert two 3" Bolts (86) into the U-base (89) and the base of the Uprights (97); if necessary, tip the Uprights forward as you insert the Bolts. Finger tighten two Nuts (20) with Washers (71) onto the Bolts.

   Firmly tighten the two 1 3/4" Bolts (76).

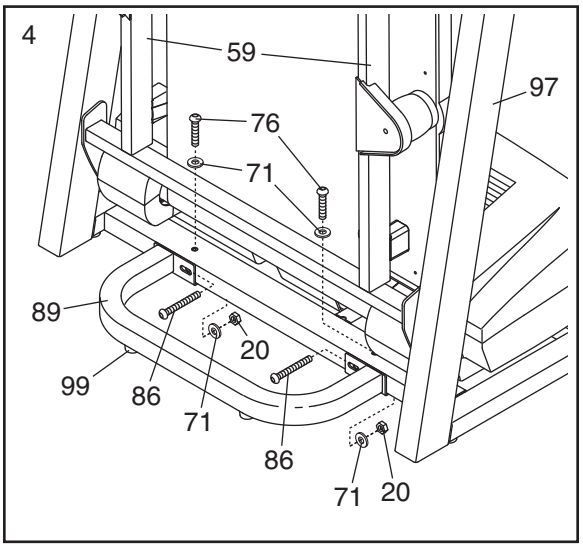

5 Lower the treadmill Frame (59) (see HOW TO LOWER THE TREADMILL FOR USE on page 21). With the help of a second person, carefully tip the Uprights (97) down as shown.

Firmly tighten the two Nuts (20) on the 3” Bolts (86).

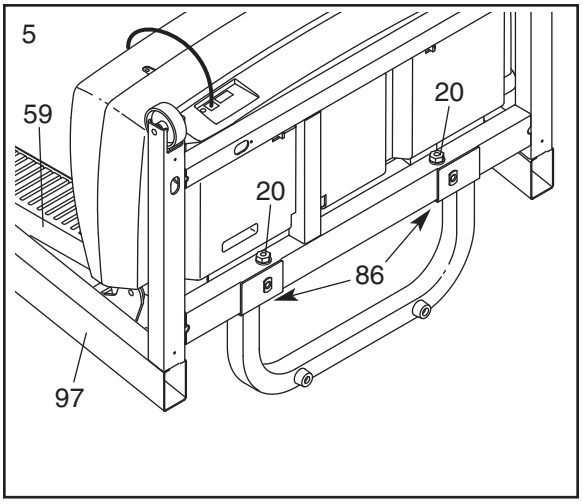

6. Attach the four Base Pads (99) to the base of the Uprights (97) with four Base Pad Screws (40) in the locations shown.

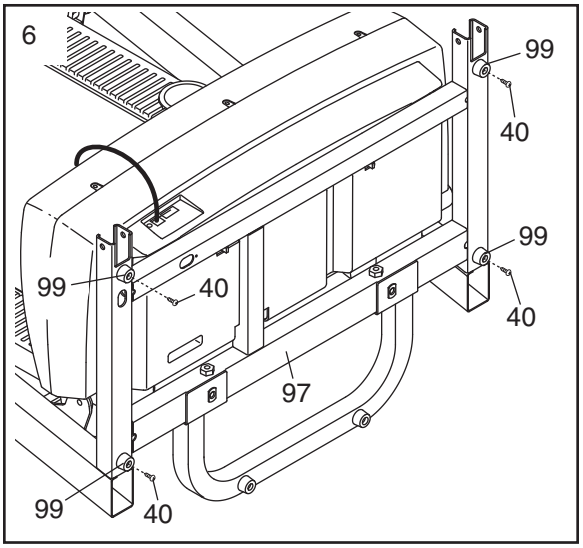

7. Attach the two Wheels (94) to the base of the Uprights (97) with two Wheel Bolts (90), four Wheel Spacers (79), and two Nuts (20) as shown. **Do not overtighten the Nuts; the Wheels should turn freely.**

With the help of a second person, carefully raise the Uprights (97) to the vertical position.

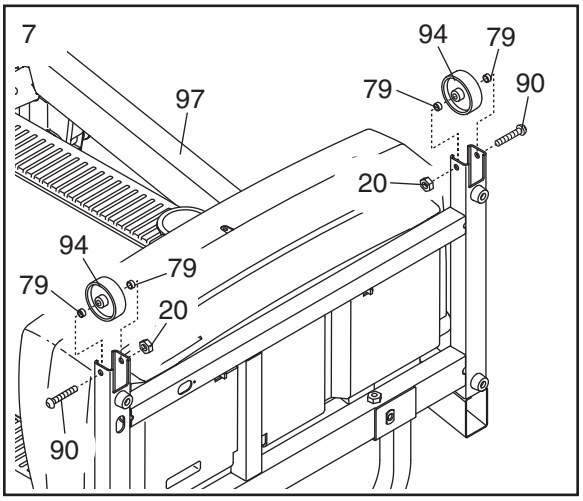

8. **Make sure that all parts are properly tightened before you use the treadmill.** Note: Extra hardware may be included. Keep the included allen wrenches in a secure place; the large allen wrench is used to adjust the walking belt (see page 23). To protect the floor or carpet, place a mat under the treadmill.

OPERATION AND ADJUSTMENT

THE PRE-LUBRICATED WALKING BELT

Your treadmill features a walking belt coated with high-performance lubricant. **IMPORTANT: Never apply silicone spray or other substances to the walking belt or the walking platform. Such substances will deteriorate the walking belt and cause excessive wear.**

HOW TO PLUG IN THE POWER CORD

⚠ DANGER: Improper connection of the equipment-grounding conductor can result in an increased risk of electric shock. Check with a qualified electrician or serviceman if you are in doubt as to whether the product is properly grounded. Do not modify the plug provided with the product—if it will not fit the outlet, have a proper outlet installed by a qualified electrician.

Your treadmill, like any other type of sophisticated electronic equipment, can be seriously damaged by sudden voltage changes in your home's power. Voltage surges, spikes, and noise interference can result from weather conditions or from other appliances being turned on or off. **To decrease the possibility of your treadmill being damaged, always use a surge suppressor with your treadmill (see drawing 1 at the right). To purchase a surge suppressor, see your local Sears store or call 1-800-366-7278 and order part number 146148, or see your local electronics store.**

Use only a single-outlet surge suppressor that is UL 1449 listed as a transient voltage surge suppressor (TVSS). The surge suppressor must have a UL suppressed voltage rating of 400 volts or less and a minimum surge dissipation of 450 joules. The surge suppressor must be electrically rated for 120 volts AC and 15 amps. There must be a monitoring light on the surge suppressor to indicate whether it is functioning properly. Failure to use a properly functioning surge suppressor could result in damage to the control system of the treadmill. If the control system is damaged, the walking belt may change speed, accelerate, or stop unexpectedly, which may result in a fall and serious injury.

This product must be grounded. If it should malfunction or break down, grounding provides a path of least resistance for electric current to reduce the risk of electric shock. This product is equipped with a cord having an equipment-grounding conductor and a grounding plug. **Plug the power cord into a surge suppressor, and plug the surge suppressor into an appropriate outlet that is properly installed and grounded in accordance with all local codes and ordinances. Important: The treadmill is not compatible with GFCI-equipped outlets.**

This product is for use on a nominal 120-volt circuit, and has a grounding plug that looks like the plug illustrated in drawing 1 below. A temporary adapter that looks like the adapter illustrated in drawing 2 may be used to connect the surge suppressor to a 2-pole receptacle as shown in drawing 2 if a properly grounded outlet is not available.

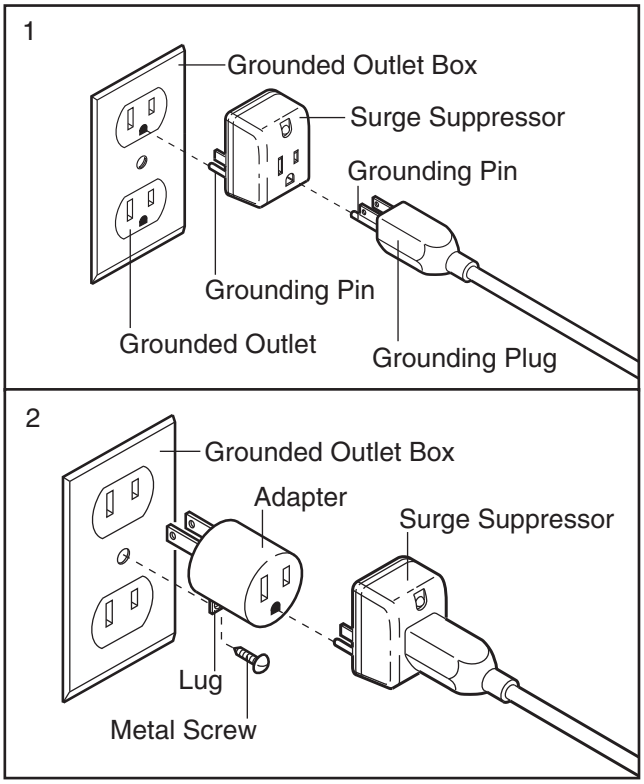

The temporary adapter should be used only until a properly grounded outlet (drawing 1) can be installed by a qualified electrician.

The green-colored rigid ear, lug, or the like extending from the adapter must be connected to a permanent ground such as a properly grounded outlet box cover. Whenever the adapter is used it must be held in place by a metal screw. **Some 2-pole receptacle outlet box covers are not grounded. Contact a qualified electrician to determine if the outlet box cover is grounded before using an adapter.**

CONSOLE DIAGRAM

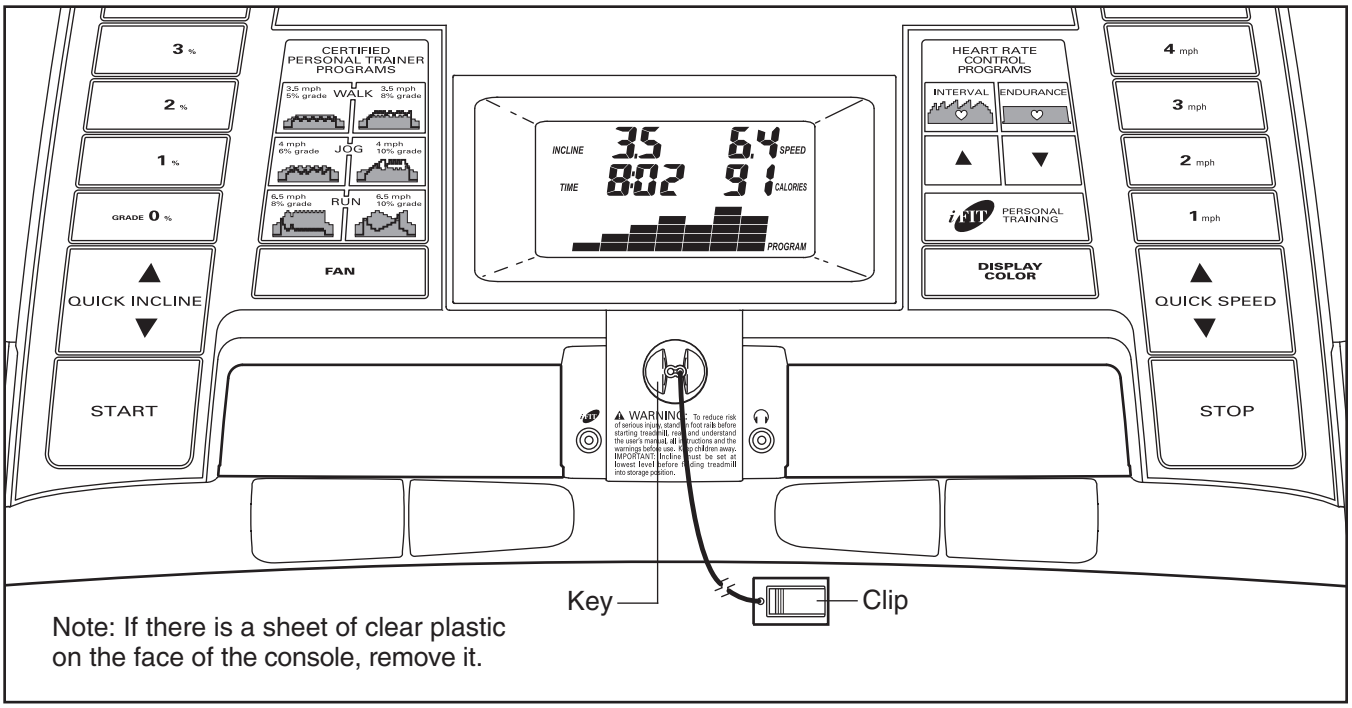

Note: If there is a sheet of clear plastic on the face of the console, remove it.

FEATURES OF THE CONSOLE

The treadmill console offers an impressive array of features designed to make your workouts more effective.

When the manual mode of the console is selected, the speed and incline of the treadmill can be changed with the touch of a button. As you exercise, the console will display continuous exercise feedback. You can even measure your heart rate using the built-in handgrip pulse sensor or the optional chest pulse sensor (see page 20).

In addition, the console features six preset programs. Each program automatically controls the speed and incline of the treadmill as it guides you through an effective workout. The console also offers two heart rate programs that control the speed and incline of the treadmill to keep your heart rate near target heart rate settings during your workouts. Note: The heart rate programs require the use of the optional chest pulse sensor.

The console also features iFIT.com interactive technology. Having iFIT.com technology is like having a personal trainer in your home. Using a stereo audio cable, you can connect the treadmill to your portable stereo, home stereo, computer, or VCR and play special iFIT.com MP3, CD, and video programs (iFIT.com MP3 programs, CDs, and videocassettes are available separately). iFIT.com programs automatically control the speed and incline of the treadmill as a personal trainer guides you through every step of your workout; high-energy music provides added motivation. **To download iFIT.com MP3 programs, go to www.iFIT.com. To purchase iFIT.com CDs or videocassettes, call toll-free 1-888-533-1333.**

With the treadmill connected to your computer, you can also go to www.iFIT.com and access iFIT.com programs directly from our Web site. **See www.iFIT.com for more information.**

To use the manual mode of the console, follow the steps beginning on page 10. **To use a preset program**, see page 12. **To use a heart rate program**, see page 13. **To use an iFIT.com MP3, CD, or video program**, see page 17. **To use an iFIT.com program directly from our Web site**, see page 19.

HOW TO TURN ON THE POWER

1 Plug in the power cord (see page 8).

2 Locate the reset/off circuit breaker on the treadmill frame near the power cord. Make sure that the circuit breaker is in the reset position.

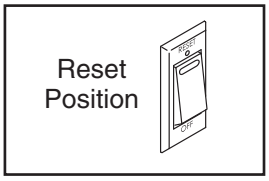

3 Stand on the foot rails of the treadmill. Find the clip attached to the key (see the drawing on page 9) and slide the clip onto the waistband of your clothes. Next, insert the key into the console. After a moment, the display will light. **Test the clip by carefully taking a few steps backward until the key is pulled from the console. If the key is not pulled from the console, adjust the position of the clip as needed.**

HOW TO USE THE MANUAL MODE

1 **Insert the key into the console.**

See HOW TO TURN ON THE POWER above.

2 **Select the manual mode.**

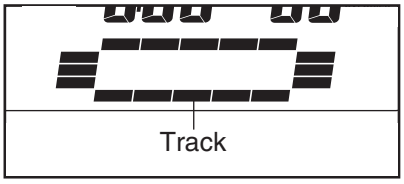

When the key is inserted, the manual mode will be selected. If a program has been selected, reselect the manual mode by pressing one of the Walk buttons, one of the Jog buttons, or one of the Run buttons twice so a track appears in the lower part of the display.

3 **Start the walking belt.**

To start the walking belt, press the Start button, the Quick Speed increase button, or one of the speed buttons numbered 1 through 10.

If the Start button or the Quick Speed increase button is pressed, the walking belt will begin to move at 1 mph. As you exercise, change the speed of the walking belt as desired by pressing the Quick Speed increase and decrease buttons.

Each time a button is pressed, the speed setting will change by 0.1 mph; if a button is held down, the speed setting will change in increments of 0.5 mph. Note: After the buttons are pressed, it may take a moment for the walking belt to reach the selected speed setting.

If one of the numbered speed buttons is pressed, the walking belt will gradually increase in speed until it reaches the selected speed setting.

To stop the walking belt, press the Stop button. To restart the walking belt, press the Start button, the Quick Speed increase button, or one of the numbered speed buttons.

Note: The first time the treadmill is used, observe the alignment of the walking belt, and center the walking belt if necessary (see page 23).

4 **Change the incline of the treadmill as desired.**

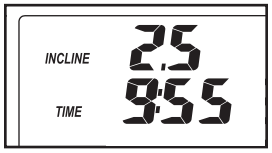

To change the incline of the treadmill, press the Quick Incline increase and decrease buttons. Each time a button is pressed, the incline will change by 0.5%. To change the incline quickly, press one of the incline buttons numbered 0 through 10. Note: After the buttons are pressed, it may take a moment for the treadmill to reach the selected incline setting.

5 **Follow your progress with the display.**

Note: The display can be backlit with any of five colors. To select the desired color, press the Display Color button repeatedly.

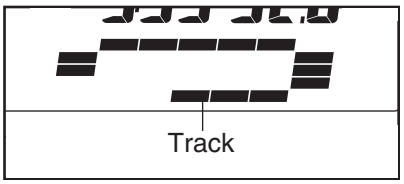

When the manual mode or the iFIT.com mode is selected, the lower part of the display will show a 1/4-mile track. As you walk or run, the indicators around the track will appear in succession until the entire track appears. The track will then disappear and the indicators will again begin to appear in succession.

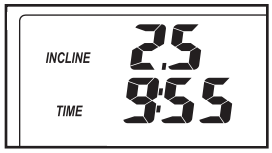

The left side of the display will show the incline level of the treadmill, the elapsed time, the approximate number of grams of carbs you have burned, and the distance you have walked or run. Note: Each time the incline changes, the display will show the incline setting for a few seconds When a program is selected, the display will show the time remaining in the program instead of the elapsed time.

The right side of the display will show the speed of the walking belt, the approximate number of calories you have burned, and your pace (in minutes per mile). The display will also show your heart rate when you use the handgrip pulse sensor or the optional chest pulse sensor.

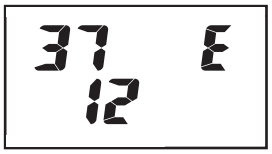

Note: The console can display speed and distance in either miles or kilometers. To determine which unit of measurement is selected, hold down the Stop button while inserting the key into the console. An “E” for English miles or an “M” for metric kilometers will appear in the right side of the display. Press the Quick Speed increase button to change the unit of measurement. When the desired unit of measurement is selected, remove the key. **Note: For simplicity, all instructions in this section refer to miles.**

To reset the display, press the Stop button, remove the key, and then reinsert the key.

6 **Measure your heart rate if desired.**

Note: If you use the handgrip pulse sensor and the optional chest pulse sensor at the same time, the console will not display your heart rate accurately. Before using the handgrip pulse sensor, remove the sheet of clear plastic from the metal contacts. In addition, make sure that your hands are clean.

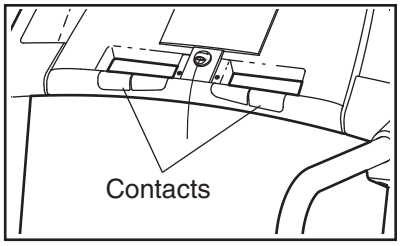

To measure your heart rate, **stand on the foot rails** and hold the metal contacts on the handrail—**avoid moving your hands**. When your pulse is detected, the heart symbol in the right side of the display will appear, one or two dashes will appear, and then your heart rate will be shown. **For the most accurate heart rate reading, continue to hold the contacts for about 15 seconds.**

7 **Turn on the fan if desired.**

To turn on the fan at low speed, press the Fan button. To turn on the fan at medium speed, press the button a second time. To turn on the fan at high speed, press the button a third time. To turn off the fan, press the button a fourth time. Note: If the fan is on when the walking belt is stopped, the fan will automatically turn off after a few minutes.

8 **When you are finished exercising, remove the key.**

Step onto the foot rails, press the Stop button, and **adjust the incline of the treadmill to the lowest setting. The incline must be at the lowest setting when the treadmill is folded to the storage position or the treadmill will be damaged.** Next, remove the key from the console and put it in a secure place. **Note: If the display remains lit after the key is removed, the console is in the “demo” mode. See page 20 and turn off the demo mode.**

When you are finished using the treadmill, switch the reset/off circuit breaker to the off position and unplug the power cord.

HOW TO USE A PRESET PROGRAM

1 **Insert the key into the console.**

See HOW TO TURN ON THE POWER on page 10.

2 **Select a preset program.**

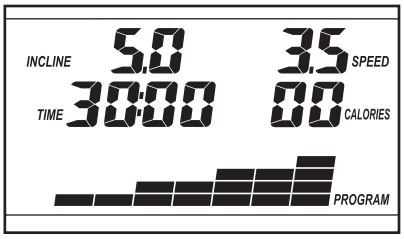

To select a preset program, press one of the Walk buttons, one of the Jog buttons, or one of the Run buttons. When a preset program is selected, the maximum speed setting of the program and the maximum incline setting of the program will flash in the display for a few seconds. The display will also show how long the program will last. The matrix in the lower part of the display will show the first seven speed settings of the program.

3 **Press the Start button or the Quick Speed increase button to start the program.**

A moment after the button is pressed, the treadmill will automatically adjust to the first speed and incline settings of the program. Hold the handrails and begin walking.

Each program is divided into 30 one-minute segments. One speed setting and one incline setting are programmed for each segment. Note: The same speed setting and/or incline setting may be programmed for two or more consecutive segments.

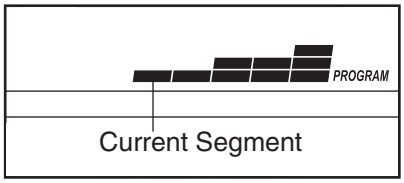

The speed setting for the first segment will be shown in the flashing Current Segment column of the matrix in the lower part of the display. (The incline settings are not shown in the matrix.) The speed settings for the next four segments will be shown in the four columns to the right.

When only three seconds remain in the first segment of the program, both the Current Segment column and the column to the right will flash and a series of tones will sound. If the speed and/or incline of the treadmill is about to change, the speed setting and/or the incline setting will flash in the display to alert you.

When the first segment is completed, *all speed settings will move one column to the left*. The speed setting for the second segment will then be shown in the flashing Current Segment column and the treadmill will automatically adjust to the speed and incline settings for the second segment. Note: If all five of the indicators in the Current Segment column are lit, *the speed settings may move downward* so that only the highest indicators appear in the matrix.

The program will continue in this way until the speed setting for the last segment is shown in the Current Segment column and the last segment ends. The walking belt will then slow to a stop.

If the speed or incline setting for the current segment is too high or too low, you can manually override the setting by pressing the Speed or Incline buttons. Every few times a Speed button is pressed, an additional indicator will appear or disappear in the Current Segment column; if any of the columns to the right of the Current Segment column have the same number of lit indicators as the Current Segment column, an additional indicator may appear or disappear in those columns as well. **Important: When the current segment of the program ends, the treadmill will automatically adjust to the speed and incline settings for the next segment.**

To stop the program at any time, press the Stop button. To restart the program, press the Start button or the Quick Speed increase button. The walking belt will begin to move at 1 mph. When the next segment of the program begins, the treadmill will automatically adjust to the speed and incline settings for the next segment.

4 **Follow your progress with the display.**

See step 5 on page 10.

5 **Measure your heart rate if desired.**

See step 6 on page 11.

6 **Turn on the fan if desired.**

See step 7 on page 11.

7 **When you are finished exercising, remove the key from the console.**

When the program has ended, **make sure that the incline of the treadmill is at the lowest setting.** Next, remove the key from the console and put it in a safe place. **Note: If the display remains lit after the key is removed, the console is in the "demo" mode. See page 20 and turn off the demo mode.**

When you are finished using the treadmill, switch the reset/off circuit breaker to the off position and unplug the power cord.

HOW TO USE A HEART RATE PROGRAM

The Interval heart rate program will automatically adjust the speed and incline of the treadmill to keep your heart rate within a preset range during your workout. The Endurance heart rate program will keep your heart rate near a target heart rate that you select.

⚠ CAUTION: If you have heart problems, or if you are over 60 years of age and have been inactive, do not use the heart rate programs. If you are taking medication regularly, consult your physician to find whether the medication will affect your exercise heart rate.

Follow the steps below to use a heart rate program.

1 **Put on the optional chest pulse sensor.**

You must wear the optional chest pulse sensor (see page 20) to use a heart rate program.

2 **Insert the key into the console.**

See HOW TO TURN ON THE POWER on page 10.

3 **Select a heart rate program.**

To select a heart rate program, press the Interval button or the Endurance button.

If the Interval program is selected, the first seven target heart rate settings of the program will appear in the matrix.

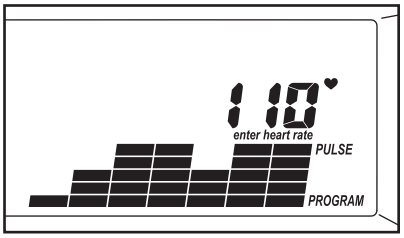

If the Endurance program is selected, a heart symbol will appear in the matrix.

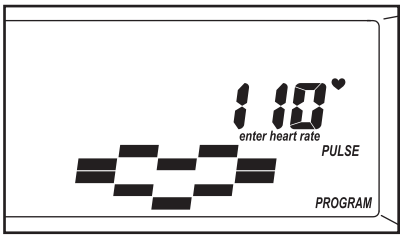

4 **Enter a target heart rate setting.**

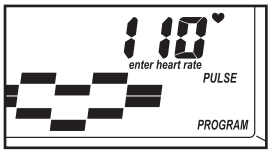

If the Interval program is selected, the maximum target heart rate setting of the program will appear in the display. If desired, press the Heart Rate increase and decrease buttons to change the maximum target heart rate setting **(see EXERCISE INTENSITY on page 24).** Note: If the maximum target heart rate setting is changed, the intensity level of the entire program will change.

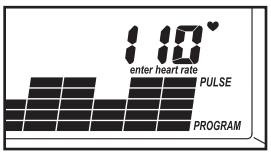

If the Endurance program is selected, the target heart rate setting for the program will flash in the display. If desired, press the Heart Rate increase and decrease buttons to change the target heart rate setting **(see EXERCISE INTENSITY on page 24).** Note: The same target heart rate setting will be programmed for the entire program.

5 **Press the Start button or the Quick Speed increase button to start the program.**

A moment after the button is pressed, the treadmill will automatically adjust to the first speed and incline settings of the program. Hold the handrails and begin walking.

The Interval program is divided into 30 one-minute segments. One target heart rate setting is programmed for each segment. (Note: The same target heart rate setting may be programmed for two or more consecutive segments.) The Endurance program is divided into 40 one-minute segments. The same target heart rate setting is programmed for all segments. Note: For a shorter workout, simply stop the program before it ends.

If the Interval program is selected, the target heart rate setting for the first segment will be shown in the flashing Current Segment column of the matrix. The target heart rate settings for the next several segments will be shown in the columns to the right. When only three seconds remain in the first segment, both the Current Segment column and the column to the right will flash and a series of tones will sound. In addition, the speed setting and the incline setting will flash in the displays to alert you. When the first segment ends, *all target heart rate settings will move one column to the left.* The target heart rate setting for the second segment will then be shown in the flashing Current Segment column.

During both heart rate programs, the console will regularly compare your heart rate to the current target heart rate setting. If your heart rate is too far below or above the target heart rate setting, the speed of the walking belt will automatically increase or decrease to bring your heart rate closer to the target heart rate setting. If the speed of the walking belt reaches 7.5 mph and your heart rate is still too far below the target heart rate setting, the incline of the treadmill will also increase.

If the speed or incline setting is too high or too low at any time during the program, you can adjust the setting with the Speed or Incline buttons. However, each time the console compares your heart rate to the target heart rate setting, the speed and/or incline of the treadmill may automatically change to bring your heart rate closer to the target heart rate.

If your pulse is not detected during the program, the letters “PLS” will flash in the display and the speed and/or incline of the treadmill may automatically decrease. If this occurs, see the instructions included with the optional chest pulse sensor.

To stop the program at any time, press the Stop button. To restart the program, press the Start button or the Quick Speed increase button. The walking belt will begin to move at 1 mph. When the console compares your heart rate to the target heart rate setting, the speed and/or incline of the treadmill may automatically change to bring your heart rate closer to the target heart rate setting.

6 **Follow your progress with the display.**

See step 5 on page 10.

7 **Turn on the fan if desired.**

See step 7 on page 11.

8 **When you are finished exercising, remove the key from the console.**

See step 7 on page 13.

HOW TO CONNECT THE TREADMILL TO USE IFIT.COM PROGRAMS

To use iFIT.com MP3 or CD programs, the treadmill must be connected to your MP3 player, CD player, portable stereo, home stereo, or computer. See pages 15 and 16 for connecting instructions. **To use iFIT.com programs directly from our Web site**, the treadmill must be connected to your computer. See page 16 for connecting instructions. **To use iFIT.com video programs**, the treadmill must be connected to your VCR. See page 17 for connecting instructions.

HOW TO CONNECT YOUR MP3 PLAYER OR CD PLAYER

A. Plug one end of the included 1/8” to 1/8” stereo audio cable into the input jack on the console. Plug the other end of the cable into a jack on your MP3 player or CD player. Plug your headphones into the headphone jack on the console.

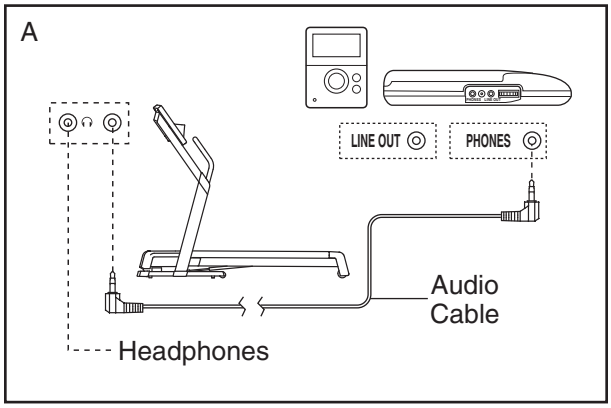

HOW TO CONNECT YOUR PORTABLE STEREO

Note: If your stereo has an RCA-type AUDIO OUT jack, see instruction A below. If your stereo has a 1/8” LINE OUT jack, see instruction B. If your stereo has only a PHONES jack, see instruction C.

A. Plug one end of a long 1/8” to RCA stereo audio cable (available at electronics stores) into the input jack on the console. Plug the other end of the cable into the AUDIO OUT jack on your stereo.

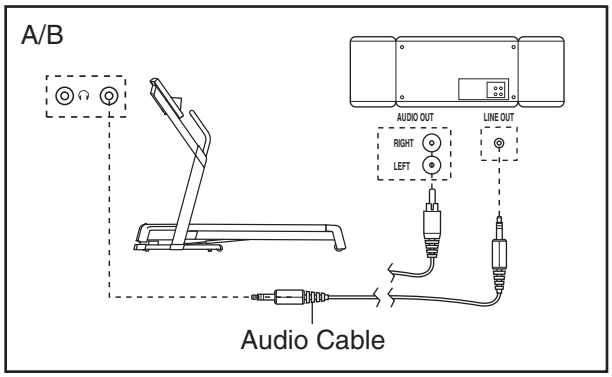

B. See the drawing above. Plug one end of a long 1/8” to 1/8” stereo audio cable (available at electronics stores) into the input jack on the console. Plug the other end of the cable into the LINE OUT jack on your stereo. Note: While the cable is plugged into the LINE OUT jack, do not plug your headphones into the headphone jack on the console.

C. Plug one end of a long 1/8” to 1/8” stereo audio cable (available at electronics stores) into the input jack on the console. Plug the other end of the cable into the PHONES jack on your stereo. Plug your headphones into the headphone jack on the console.

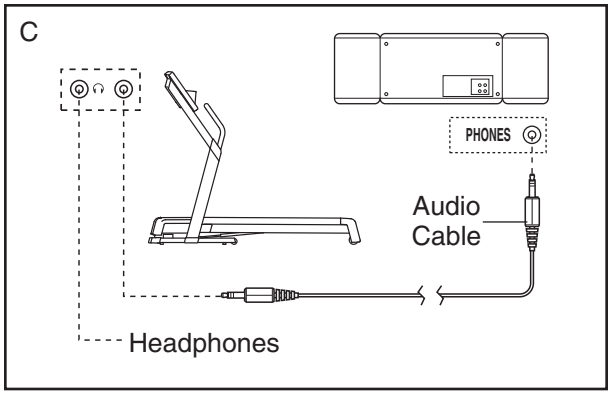

HOW TO CONNECT YOUR HOME STEREO

Note: If your stereo has an unused LINE OUT jack, see instruction A below. If the LINE OUT jack is being used, see instruction B.

A. Plug one end of a long 1/8” to RCA stereo audio cable (available at electronics stores) into the input jack on the console. Plug the other end of the cable into the LINE OUT jack on your stereo. Note: While the cable is plugged into the LINE OUT jack, do not plug your headphones into the headphone jack on the console.

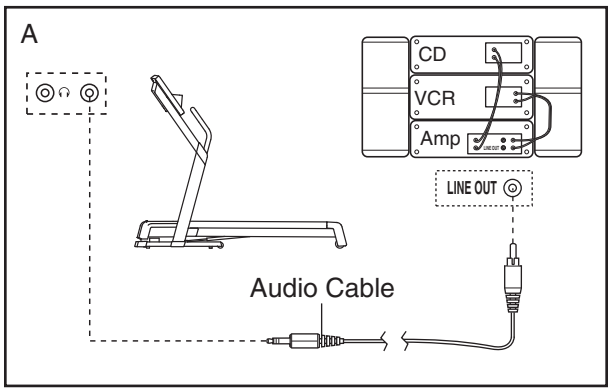

B. Plug one end of a long 1/8” to RCA stereo audio cable (available at electronics stores) into the input jack on the console. Plug the other end of the cable into an RCA Y-adapter (available at electronics stores). Next, remove the wire that is currently plugged into the LINE OUT jack on your stereo and plug the wire into the unused side of the Y-adapter. Plug the Y-adapter into the LINE OUT jack on your stereo. Note: While the Y-adapter is plugged into the LINE OUT jack, do not plug your headphones into the headphone jack on the console.

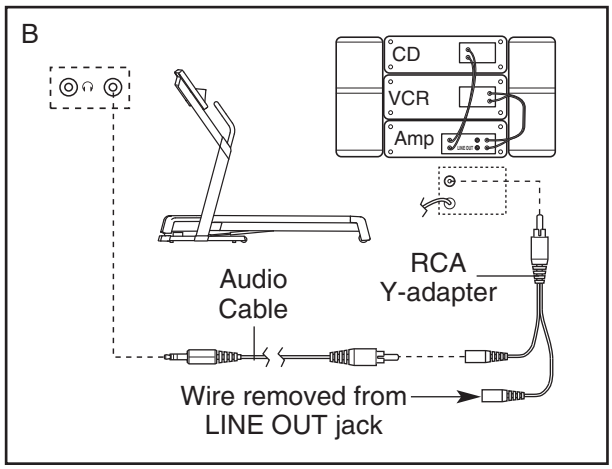

HOW TO CONNECT YOUR COMPUTER

A. Plug one end of a long 1/8” to 1/8” stereo audio cable (available at electronics stores) into the input jack on the console. Plug the other end of the cable into the LINE OUT jack on your computer. Note: While the cable is plugged into the LINE OUT jack, do not plug your headphones into the headphone jack on the console.

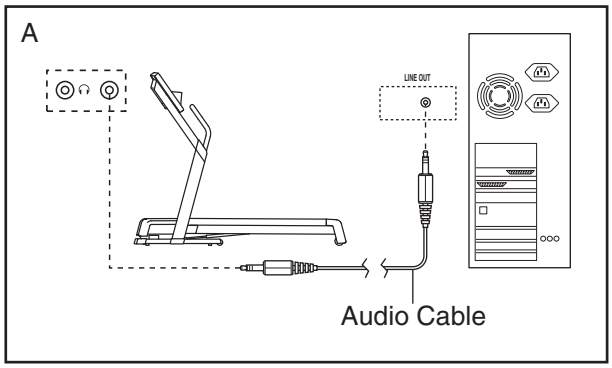

HOW TO CONNECT YOUR VCR

Note: If your VCR has an unused AUDIO OUT jack, see instruction A below. If the AUDIO OUT jack is being used, see instruction B. If you have a TV with a built-in VCR, see instruction B. If your VCR is connected to your home stereo, see HOW TO CONNECT YOUR HOME STEREO on page 16.

A. Plug one end of a long 1/8” to RCA stereo audio cable (available at electronics stores) into the input jack on the console. Plug the other end of the cable into the AUDIO OUT jack on your VCR.

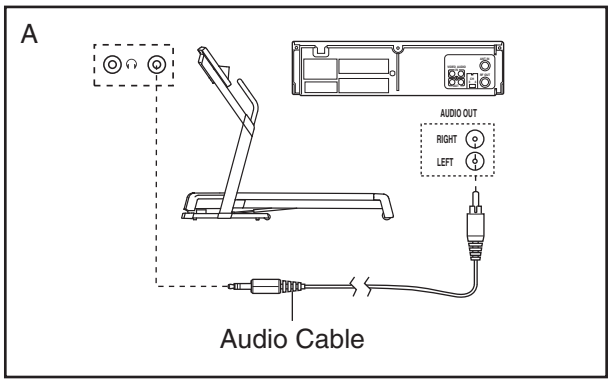

B. Plug one end of a long 1/8” to RCA stereo audio cable (available at electronics stores) into the input jack on the console. Plug the other end of the cable into an RCA Y-adapter (available at electronics stores). Next, remove the wire that is currently plugged into the AUDIO OUT jack on your VCR and plug the wire into the unused side of the Y-adapter. Plug the Y-adapter into the AUDIO OUT jack on your VCR.

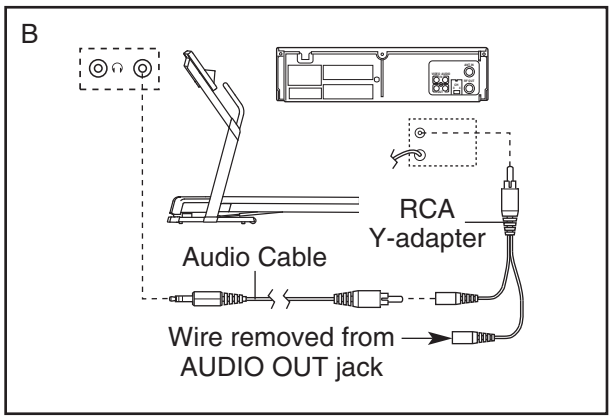

HOW TO USE AN IFIT.COM MP3, CD, OR VIDEO PROGRAM

To use an iFIT.com MP3, CD, or video program, the treadmill must be connected to your MP3 player, CD player, or VCR. See HOW TO CONNECT THE TREADMILL TO USE IFIT.COM PROGRAMS on pages 15 to 17. **To download iFIT.com MP3 programs, go to www.iFIT.com. To purchase iFIT.com CDs or videocassettes, call toll-free 1-888-533-1333.**

Follow the steps below to use an iFIT.com MP3, CD, or video program.

1 Insert the key into the console.

See HOW TO TURN ON THE POWER on page 10.

2 Select the iFIT.com mode.

To select the iFIT.com mode, press the iFIT button. The letters “iFIT” and a track will appear in the display.

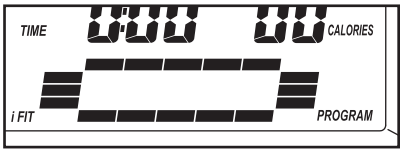

3 Press the Play button on your MP3 player, CD player, or VCR.

Note: If you are using an iFIT.com CD, insert the CD into your CD player; if you are using an iFIT.com videocassette, insert the videocassette into your VCR.

A moment after the Play button is pressed, your personal trainer will begin guiding you through your workout. Simply follow your personal trainer’s instructions. Note: If the time is flashing in the display, press the Start button or the Quick Speed increase button on the console. The treadmill will not respond to an MP3, CD, or video program while the time is flashing in the display.

During the program, an electronic “chirping” sound will alert you when the speed and/or incline of the treadmill is about to change. **CAUTION: Always listen for the “chirp” and be prepared for speed and/or incline changes. In some instances, the speed and/or incline may change before your personal trainer describes the change.**

If the speed or incline settings are too high or too low, you can manually override the settings at any time by pressing the Speed or Incline buttons on the console. However, **when the next "chirp" is heard, the speed and/or incline will change to the next settings of the program.**

To stop the walking belt at any time, press the Stop button on the console. To restart the program, press the Start button or the Quick Speed increase button. After a moment, the walking belt will begin to move at 1.0 mph. **When the next "chirp" is heard, the speed and/or incline will change to the next settings of the program**.

When the program is completed, the walking belt will stop. Note: To use another MP3, CD, or video program, press the Stop button or remove the key and go to step 1 on page 17.

Note: If the speed and/or incline of the treadmill does not change when a "chirp" is heard:

- **Make sure that the letters "iFIT" appear in the display and that the time is not flashing in the display. If the time is flashing, press the Start button or the Quick Speed increase button on the console.**
- **Adjust the volume of your MP3 player, CD player, or VCR. If the volume is too high or too low, the console may not detect the program signals.**
- **Make sure that the audio cable is properly connected.**
- **If you are using a portable CD player and the CD skips, set the CD player on the floor or another flat surface instead of on the console.**
- **See THE INCLINE OF THE TREADMILL DOES NOT CHANGE CORRECTLY on page 22.**

4 **Follow your progress with the display.**

See step 5 on page 10.

5 **Measure your heart rate if desired.**

See step 6 on page 11.

6 **Turn on the fan if desired.**

See step 7 on page 11.

7 **When you are finished exercising, remove the key from the console.**

See step 7 on page 13.

CAUTION: Always remove iFIT.com CDs and videocassettes from your CD player and VCR and disconnect your MP3 player when you are not using them.

HOW TO USE AN IFIT.COM PROGRAM DIRECTLY FROM OUR WEB SITE

Our Web site at www.iFIT.com allows you to access basic programs, audio programs, and video programs directly from the internet. Additional options are soon to be available. See www.iFIT.com for details.

To use programs from our Web site, the treadmill must be connected to your home computer. See HOW TO CONNECT YOUR COMPUTER on page 16. In addition, you must have an internet connection and an internet service provider. A list of specific system requirements is found on our Web site.

Follow the steps below to use a program from our Web site.

1 Insert the key into the console.

See HOW TO TURN ON THE POWER on page 10.

2 Select the iFIT.com mode.

To select the iFIT.com mode, press the iFIT button. The letters "iFIT" and a track will appear in the display.

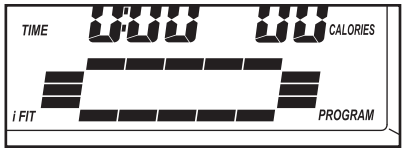

3 Go to your computer and start an internet connection.

4 Start your web browser, if necessary, and go to our Web site at www.iFIT.com.

5 Follow the desired links on our Web site to select a program.

Read and follow the on-line instructions for using a program.

6 Follow the on-line instructions to start the program.

When you start the program, an on-screen countdown will begin.

7 Return to the treadmill and stand on the foot rails. Find the clip attached to the key and slide the clip onto the waistband of your clothes.

When the on-screen countdown ends, the program will begin and the walking belt will begin to move. Hold the handrails, step onto the walking belt, and begin walking. During the program, an electronic "chirping" sound will alert you when the speed and/or incline of the treadmill is about to change. **CAUTION: Always listen for the "chirp" and be prepared for speed and/or incline changes.**

If the speed or incline settings are too high or too low, you can manually override the settings at any time by pressing the Speed or Incline buttons on the console. **However, when the next "chirp" is heard, the speed and/or incline will change to the next settings for the program.**

To stop the walking belt at any time, press the Stop button on the console. To restart the program, press the Start button or the Quick Speed increase button. After a moment, the walking belt will begin to move at 1.0 mph. **When the next "chirp" is heard, the speed and incline will change to the next settings of the program**.

When the program is completed, the walking belt will stop. Note: To use another program, press the Stop button and go to step 5.

Note: If the speed and/or incline of the treadmill does not change when a "chirp" is heard, make sure that the letters "iFIT" appear in the display and that the time is not flashing in the display. In addition, make sure that the audio cable is properly connected.

8 Follow your progress with the display.

See step 5 on page 10.

9 When you are finished exercising, remove the key from the console.

See step 7 on page 13.

THE INFORMATION MODE/DEMO MODE

The console features an information mode that keeps track of the total number of hours that the treadmill has been operated and the total number of miles that the walking belt has moved. The information mode also allows you to select miles or kilometers as the unit of measurement and to turn on and turn off the demo mode.

To select the information mode, hold down the Stop button while inserting the key into the console. When the information mode is selected, the following information will be shown in the display:

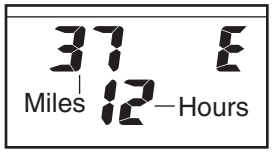

The left side of the display will show the total number of miles (or kilometers) that the walking belt has moved and the total number of hours that the treadmill has been used. An “E” for English miles or an “M” for metric kilometers will appear in the right side of the display. Press the Quick Speed increase button to change the unit of measurement.

IMPORTANT: If a “d” appears in the right side of the display, the console is in the “demo” mode. This mode is intended to be used only when a treadmill is displayed in a store. When the console is in the demo mode, the power cord can be plugged in, the key can be removed from the console, and the indicators in the display will automatically appear in a preset sequence, although the buttons on the console will not operate. **If a “d” appears when the information mode is selected, press the Quick Speed decrease button so “d” disappears.**

To exit the information mode, remove the key from the console.

THE OPTIONAL CHEST PULSE SENSOR

An optional chest pulse sensor offers hands-free operation, and enables you to use the console’s two heart rate programs. **To purchase the optional chest pulse sensor, call toll-free 1-888-533-1333.**

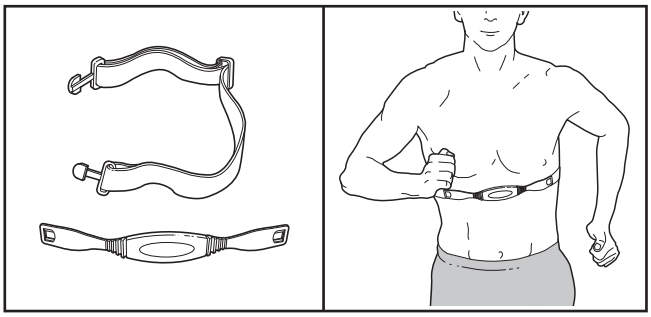

If you purchase the optional chest pulse sensor, follow the steps below to install the receiver included with the chest pulse sensor.

1. **Unplug the power cord.** Remove the indicated Screw (95) and the Access Door (96) from the left side of the Console Base (101).

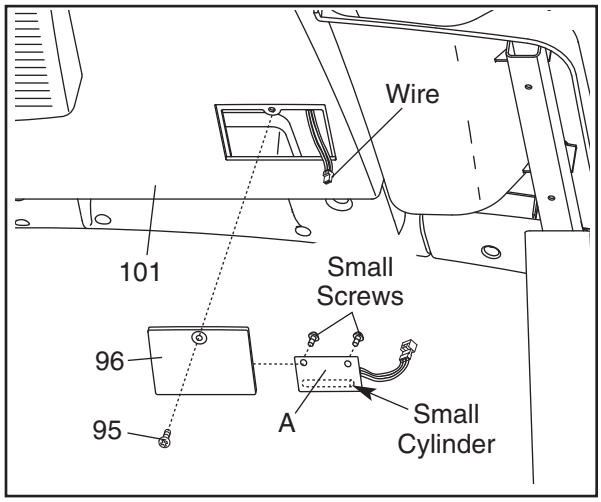

2. Connect the wire on the receiver (A) to the indicated wire extending from the Console Base (101). **Hold the receiver so the small cylinder is oriented as shown and is facing the Console Back.** Attach the receiver to the plastic posts on the Access Door (96) with the two included small screws.

3. **Make sure that no wires are pinched.** Reattach the Access Door (96) with the Screw (95). Discard the other wires included with the receiver.

HOW TO FOLD AND MOVE THE TREADMILL

HOW TO FOLD THE TREADMILL FOR STORAGE

Before folding the treadmill, adjust the incline to the lowest position. If this is not done, the treadmill may become permanently damaged. In addition, remove the key and unplug the power cord. CAUTION: You must be able to safely lift 45 pounds (20 kg) to raise, lower, or move the treadmill.

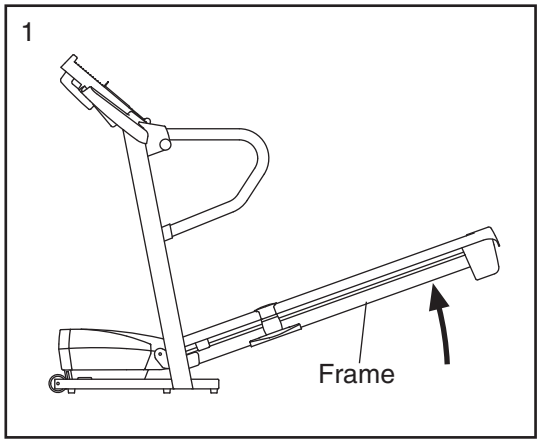

1. **Hold the metal frame firmly in the location shown by the arrow at the right. CAUTION: To decrease the possibility of injury, do not lift the frame by the plastic foot rails. Bend your legs and keep your back straight; as you raise the frame, make sure to lift with your legs rather than your back.** Raise the frame about halfway to the vertical position.

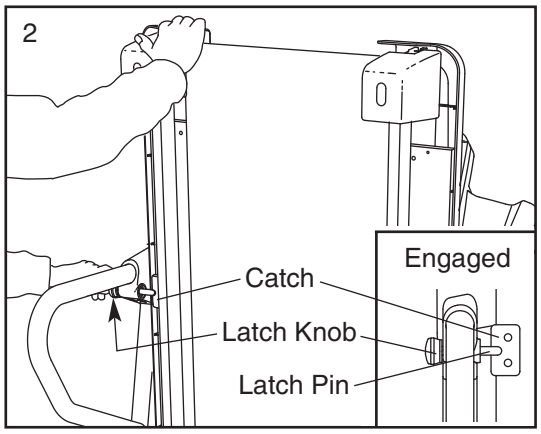

2. Move your right hand to the position shown, and hold the treadmill firmly. Using your left hand, pull the latch knob to the left and hold it. Raise the frame until the catch is past the latch pin. Slowly release the latch knob. **Make sure that the frame is held securely by the latch pin.**

   To protect the floor or carpet from damage, place a mat under the treadmill. Keep the treadmill out of direct sunlight. Do not leave the treadmill in the storage position in temperatures above 85° Fahrenheit.

HOW TO MOVE THE TREADMILL

Before moving the treadmill, convert the treadmill to the storage position as described above. **Make sure that the frame is held securely by the latch pin.**

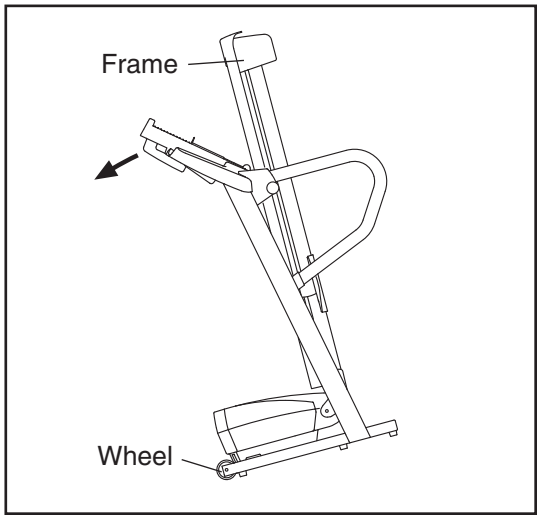

1. Hold the frame and place one foot against a wheel.

2. Tilt the treadmill back until it will roll on the wheels. Carefully move the treadmill to the desired location. **Never move the treadmill without tipping it back. To reduce the risk of injury, use extreme caution while moving the treadmill. Do not attempt to move the treadmill over an uneven surface.**

3. Place one foot against a wheel, and carefully lower the treadmill until it is resting in the storage position.

HOW TO LOWER THE TREADMILL FOR USE

1. See drawing 2 above. Hold the upper end of the treadmill with your right hand. Pull the latch knob to the left and hold it. Pivot the treadmill down until the frame is past the latch pin.

2. See drawing 1 above. Hold the frame firmly with both hands, and lower the frame to the floor. **CAUTION: To decrease the possibility of injury, do not lower the frame by gripping only the plastic foot rails. Do not drop the frame to the floor. Make sure to bend your legs and keep your back straight.**

TROUBLESHOOTING

Most treadmill problems can be solved by following the simple steps below. Find the symptom that applies, and follow the steps listed. If further assistance is needed, call toll-free 1-800-4-MY-HOME® (1-800-469-4663).

PROBLEM: The power does not turn on

SOLUTION: a. Make sure that the power cord is plugged into a surge suppressor, and that the surge suppressor is plugged into a properly grounded outlet (see page 8). Use only a single-outlet surge suppressor that meets all of the specifications described on page 8. Important: The treadmill is not compatible with GFCI-equipped outlets.

b. After the power cord has been plugged in, make sure that the key is fully inserted into the console.

c. Check the reset/off circuit breaker located on the treadmill frame near the power cord. If the switch protrudes as shown, the circuit breaker has tripped. To reset the circuit breaker, wait for five minutes and then press the switch back in.

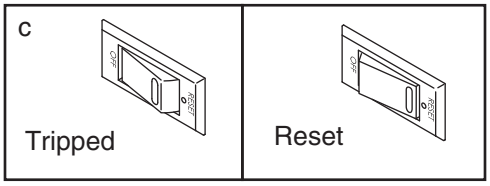

PROBLEM: The power turns off during use

SOLUTION: a. Check the reset/off circuit breaker (see the drawing above). If the circuit breaker has tripped, wait for five minutes and then press the switch back in.

b. Make sure that the power cord is plugged in. If the power cord is plugged in, unplug it, wait for five minutes, and then plug it back in.

c. Remove the key from the console. Reinsert the key fully into the console.

d. If the treadmill still will not run, please call toll-free 1-800-4-MY-HOME® (1-800-469-4663).

PROBLEM: The incline of the treadmill does not change correctly

SOLUTION: a. With the key in the console, press one of the Incline buttons. **While the incline is changing, remove the key.** After a few seconds, re-insert the key. The treadmill will automatically rise to the maximum incline level and then return to the minimum level. This will recalibrate the incline system.

PROBLEM: The displays of the console do not function properly

SOLUTION: a. Remove the key from the console and **UNPLUG THE POWER CORD.** With the help of a second person, carefully tip the Uprights (97) down as shown. Remove the three Hood Screws (44) and the two Screws (95). Note: A phillips screwdriver with a shaft at least 5” long is required.

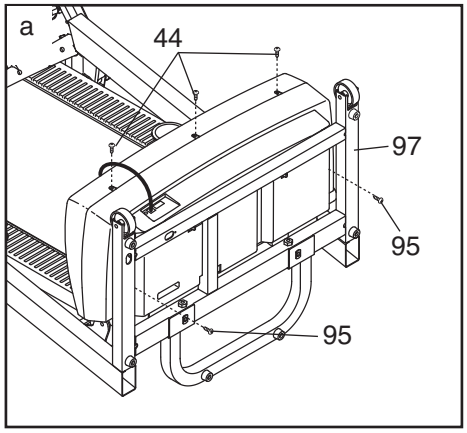

With the help of a second person, carefully raise the Uprights (97) as shown. Carefully pivot the Hood (93) off.

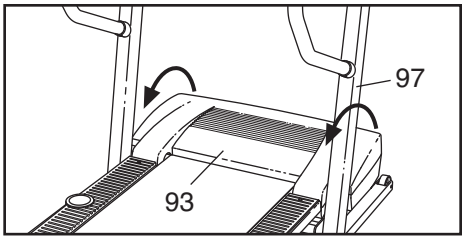

Locate the Reed Switch (22) and the Magnet (19) on the left side of the Pulley (18). Turn the Pulley until the Magnet is aligned with the Reed Switch. **Make sure that the gap between the Magnet and the Reed Switch is about 1/8".** If necessary, loosen the Screw (23), move the Reed Switch slightly, and then retighten the Screw. Reattach the Hood, and run the treadmill for a few minutes to check for a correct speed reading.

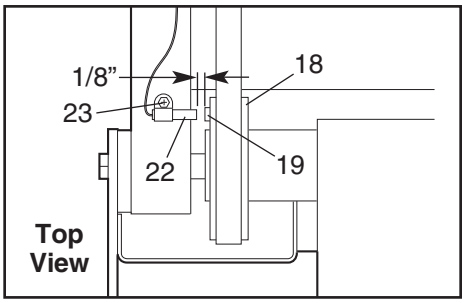

PROBLEM: The walking belt slows when walked on

SOLUTION: a. Use only a single-outlet surge suppressor that meets all of the specifications described on page 8.

b. If the walking belt is overtightened, treadmill performance may decrease and the walking belt may become damaged. Remove the key and **UNPLUG THE POWER CORD**. Using the allen wrench, turn both rear roller bolts counterclockwise, 1/4 of a turn. When the walking belt is properly tightened, you should be able to lift each edge of the walking belt 2 to 3 inches off the walking platform. Be careful to keep the walking belt centered. Plug in the power cord, insert the key, and run the treadmill for a few minutes. Repeat until the walking belt is properly tightened.

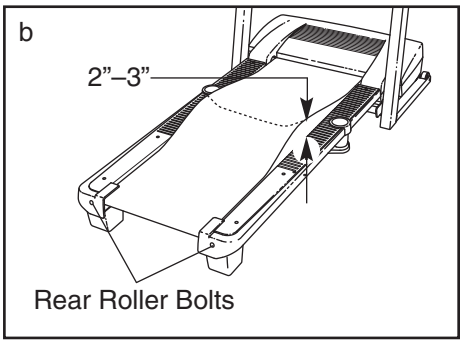

c. If the walking belt still slows when walked on, please call toll-free 1-800-4-MY-HOME® (1-800-469-4663).

PROBLEM: The walking belt is off-center or slips when walked on

SOLUTION: a. **If the walking belt is off-center,** first remove the key and **UNPLUG THE POWER CORD**. **If the walking belt has shifted to the left,** use the allen wrench to turn the left rear roller bolt clockwise 1/2 of a turn; **if the walking belt has shifted to the right,** turn the bolt counterclockwise 1/2 of a turn. Be careful not to overtighten the walking belt. Plug in the power cord, insert the key, and run the treadmill for a few minutes. Repeat until the walking belt is centered.

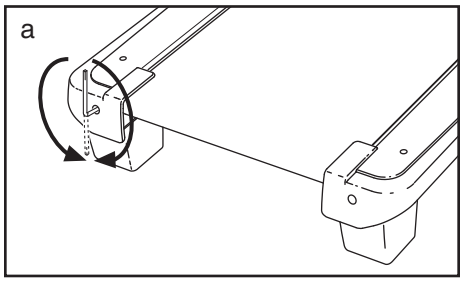

b. **If the walking belt slips when walked on,** first remove the key and **UNPLUG THE POWER CORD**. Using the allen wrench, turn both rear roller bolts clockwise, 1/4 of a turn. When the walking belt is correctly tightened, you should be able to lift each side of the walking belt 2 to 3 inches off the walking platform. Be careful to keep the walking belt centered. Then, plug in the power cord, insert the key, and carefully walk on the treadmill for a few minutes. Repeat until the walking belt is properly tightened.

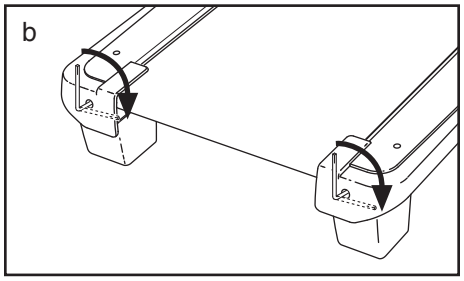

CONDITIONING GUIDELINES

⚠WARNING: Before beginning this or any exercise program, consult your physician. This is especially important for individuals over the age of 35 or individuals with pre-existing health problems.

The pulse sensor is not a medical device. Various factors, including your movement, may affect the accuracy of heart rate readings. The sensor is intended only as an exercise aid in determining heart rate trends in general.

The following guidelines will help you to plan your exercise program. For more detailed exercise information, obtain a reputable book or consult your physician.

EXERCISE INTENSITY

Whether your goal is to burn fat or to strengthen your cardiovascular system, the key to achieving the desired results is to exercise with the proper intensity. The proper intensity level can be found by using your heart rate as a guide. The chart below shows recommended heart rates for fat burning and aerobic exercise.

HEART RATE TRAINING ZONES							
AEROBIC	165	155	145	140	130	125	115
MAX FAT BURN	145	138	130	125	118	110	103
FAT BURN	125	120	115	110	105	95	90
Age	20	30	40	50	60	70	80

To find the proper heart rate for you, first find your age near the bottom of the chart (ages are rounded off to the nearest ten years). Next, find the three numbers above your age. The three numbers define your "training zone." The lower two numbers are recommended heart rates for fat burning; the higher number is the recommended heart rate for aerobic exercise.

Fat Burning

To burn fat effectively, you must exercise at a relatively low intensity level for a sustained period of time. During the first few minutes of exercise, your body uses easily accessible *carbohydrate calories* for energy. Only after the first few minutes does your body begin to use stored *fat calories* for energy. If your goal is to burn fat, adjust the speed and incline of the treadmill until your heart rate is near the lowest number in your training zone.

For maximum fat burning, adjust the speed and incline of the treadmill until your heart rate is near the middle number in your training zone.

Aerobic Exercise

If your goal is to strengthen your cardiovascular system, your exercise must be "aerobic." Aerobic exercise is activity that requires large amounts of oxygen for prolonged periods of time. This increases the demand on the heart to pump blood to the muscles, and on the lungs to oxygenate the blood. For aerobic exercise, adjust the speed and incline of the treadmill until your heart rate is near the highest number in your training zone.

WORKOUT GUIDELINES

Each workout should include the following three parts:

A Warm-up—Start each workout with 5 to 10 minutes of stretching and light exercise. A proper warm-up increases your body temperature, heart rate and circulation in preparation for exercise.

Training Zone Exercise—After warming up, increase the intensity of your exercise until your pulse is in your training zone for 20 to 60 minutes. (During the first few weeks of your exercise program, do not keep your pulse in your training zone for longer than 20 minutes.) Breathe regularly and deeply as you exercise—never hold your breath.

A Cool-down—Finish each workout with 5 to 10 minutes of stretching to cool down. This will increase the flexibility of your muscles and will help prevent post-exercise problems.

EXERCISE FREQUENCY

To maintain or improve your condition, complete three workouts each week, with at least one day of rest between workouts. After a few months, you may complete up to five workouts each week if desired. The key to success is to make exercise a regular and enjoyable part of your everyday life.

SUGGESTED STRETCHES

The correct form for several basic stretches is shown at the right. Move slowly as you stretch—never bounce.

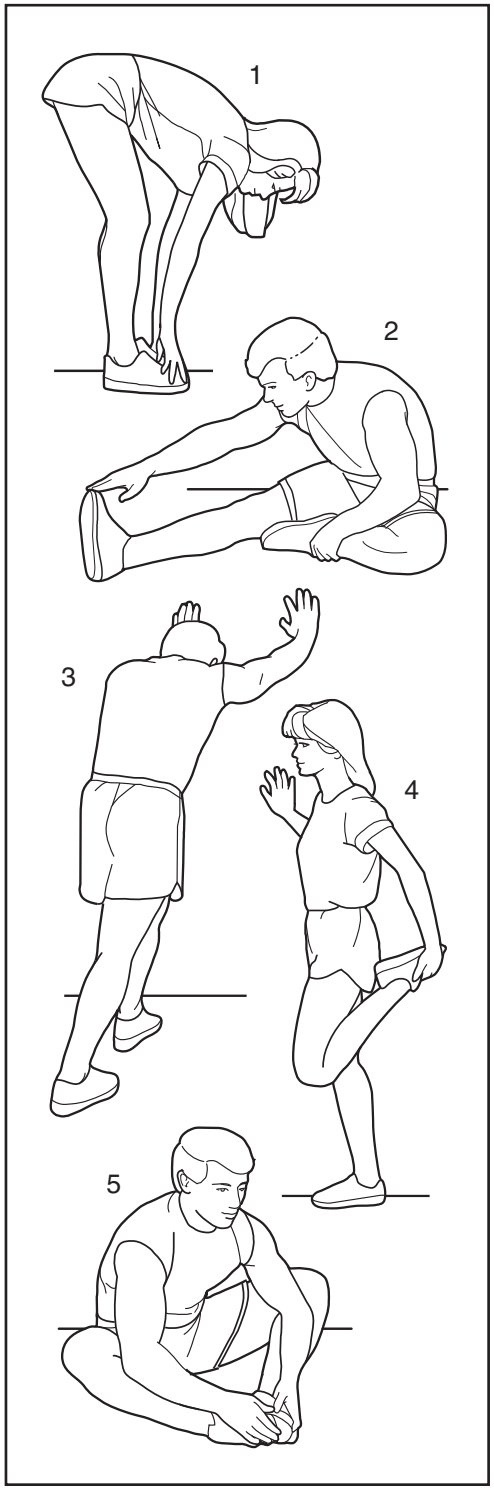

1. Toe Touch Stretch

Stand with your knees bent slightly and slowly bend forward from your hips. Allow your back and shoulders to relax as you reach down toward your toes as far as possible. Hold for 15 counts, then relax. Repeat 3 times. Stretches: Hamstrings, back of knees and back.

2. Hamstring Stretch

Sit with one leg extended. Bring the sole of the opposite foot toward you and rest it against the inner thigh of your extended leg. Reach toward your toes as far as possible. Hold for 15 counts, then relax. Repeat 3 times for each leg. Stretches: Hamstrings, lower back and groin.

3. Calf/Achilles Stretch

With one leg in front of the other, reach forward and place your hands against a wall. Keep your back leg straight and your back foot flat on the floor. Bend your front leg, lean forward and move your hips toward the wall. Hold for 15 counts, then relax. Repeat 3 times for each leg. To cause further stretching of the achilles tendons, bend your back leg as well. Stretches: Calves, achilles tendons and ankles.

4. Quadriceps Stretch

With one hand against a wall for balance, reach back and grasp one foot with your other hand. Bring your heel as close to your buttocks as possible. Hold for 15 counts, then relax. Repeat 3 times for each leg. Stretches: Quadriceps and hip muscles.

5. Inner Thigh Stretch

Sit with the soles of your feet together and your knees outward. Pull your feet toward your groin area as far as possible. Hold for 15 counts, then relax. Repeat 3 times. Stretches: Quadriceps and hip muscles.

PART LIST—Model No. 831.29606.0

R0805A

To locate the parts listed below, see the EXPLODED DRAWING attached in the center of this manual.

Key No.	Qty.	Description
1	1	Left Foot Rail
2	8	Foot Rail Screw
3	1	Console
4	2	Isolator Decal
5	1	Catch
6	2	Front Isolator
7	2	Center Isolator
8	4	Console Mounting Screw
9	2	Isolator Bracket Cover
10	2	Front Isolator Screw
11	1	Roller Bushing
12	2	Center Isolator Bolt
13	1	Walking Platform
14	2	Belt Guide
15	4	Belt Guide Screw
16	2	Walking Platform Screw, Rear
17	2	Frame Pivot Bolt
18	1	Front Roller/Pulley
19	1	Magnet
20	10	Nut
21	2	Pivot Spacer
22	1	Reed Switch
23	3	Belly Pan Screw
24	1	Reed Switch Clip
25	2	Motor Tension Bolt
26	2	Motor Tension Washer
27	1	Left Handrail Cover
28	1	Motor Belt
29	1	Motor Star Washer
30	2	Motor Tension Nut
31	1	Right Handrail Cover
32	1	Drive Motor
33	1	Lift Frame
34	5	Belly Pan Screw/Cover Screw
35	2	Walking Platform Nut
36	1	Motor Pivot Pin
37	1	Incline Motor
38	4	Incline Bolt
39	2	1/4” Washer
40	6	Base Pad Screw
41	1	Front Roller Adj. Bolt
42	2	Walking Platform Screw, Front
43	2	Handrail
44	3	Hood Screw
45	2	Star Washer
46	1	Controller Bracket
47	1	Reset/Off Circuit Breaker
48	1	Controller
49	1	Power Cord
50	1	Power Cord Grommet
51	1	Static Decal
52	6	3/4” Tek Screw
53	3	Belly Pan Clip
54	1	Belly Pan
55	1	Releasable Tie
56	1	Photo Switch Wire
57	4	Tie Holder Clamp
58	1	Cable Tie
59	1	Frame
60	1	Right Rear Foot
61	1	Motor Bracket
62	2	Rear Roller Adj, Bolt
63	1	Rear Roller
64	1	Allen Wrench
65	1	7/32” Allen Wrench
66	1	Left Rear Foot
67	1	Right Foot Rail
68	1	Walking Belt
69	1	Warning Decal
70	1	Filter Wire
71	4	Washer
72	1	Cotter Pin
73	2	Small Star Washer
74	1	Wire Harness
75	4	Crossbar Screw
76	2	1 3/4” Bolt
77	1	Console Ground Wire
78	1	Photo Switch Nut
79	4	Wheel Spacer
80	4	Handrail Bolt
81	2	Handrail Bracket
82	1	Latch Assembly
83	1	Controller Wire
84	4	Pulse Bar Washer
85	1	Front Roller Nut
86	2	3” Bolt
87	2	Motor Bracket Bolt
88	1	Ground Wire Screw
89	1	U-base
90	2	Wheel Bolt
91	2	Caution Decal
92	1	iFIT Wire
93	1	Hood
94	2	Wheel
95	20	Screw
96	1	Access Door
97	1	Upright
98	1	Photo Switch
99	4	Base Pad
100	1	Photo Switch Screw

Key No.	Qty.	Description
101	1	Console Base
102	1	Optic Disk
103	13	Ground Screw/Choke Screw
104	1	Key Clip
105	2	Handrail Cap
106	1	Console Fan
107	2	Base Pad Spacer
108	2	Rear Roller Bracket
109	2	Thin Base Pad
110	1	Crossbar

Key No.	Qty.	Description
#	1	12” Blue Wire, M/F
#	1	14” Blue Wire, F/F
#	1	6” Blue Wire, F/F
#	1	6” Black Wire, R/R
#	1	20” Black Wire, M/F
#	1	22” Red Wire, M/F
#	1	8” Green Wire, R/R
#	1	User’s Manual

#These parts are not illustrated

If a part is missing, call toll-free 1-888-533-1333.

EXPLODED DRAWING—Model No. 831.29606.0

R0805A

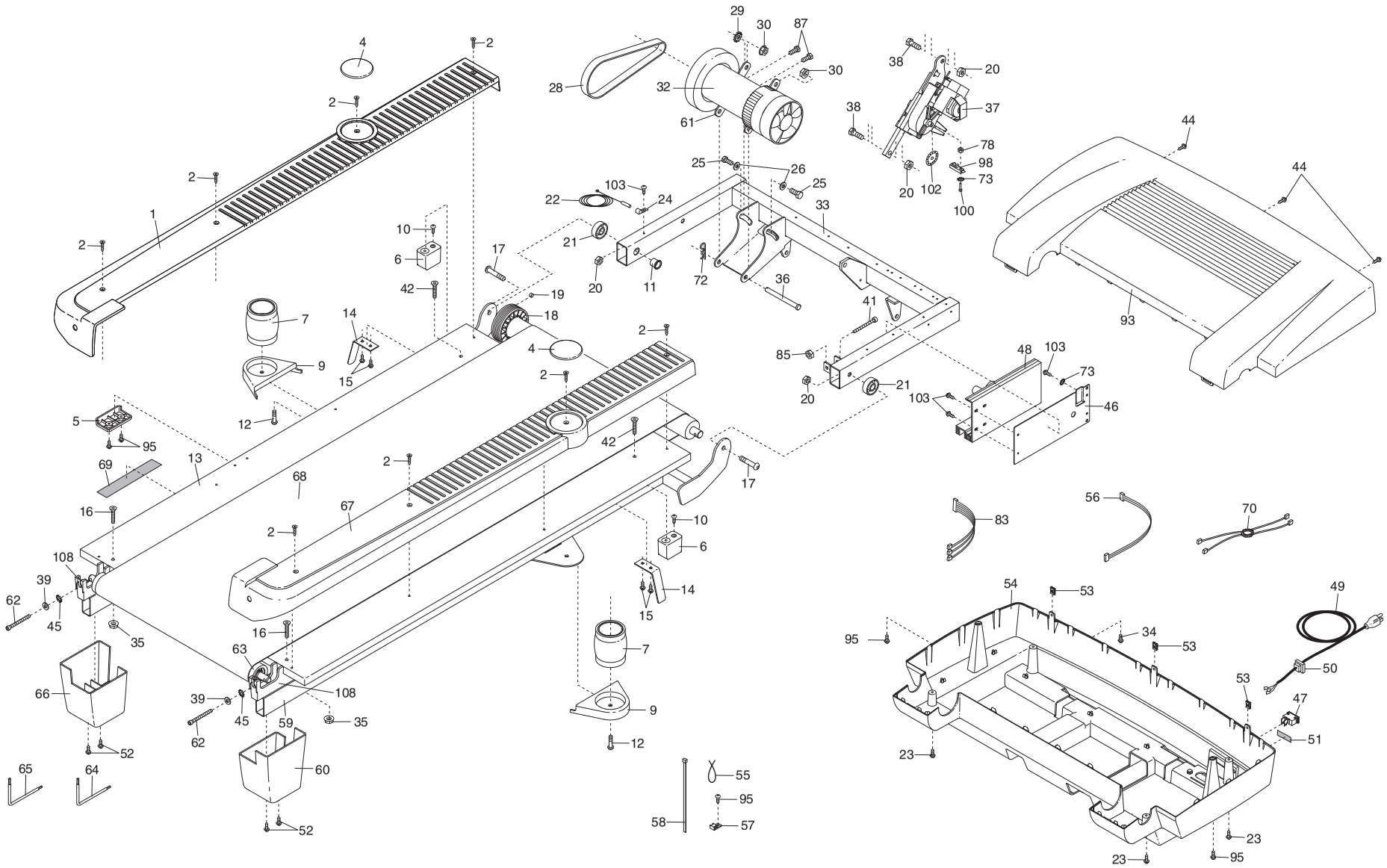

EXPLODED DRAWING—Model No. 831.29606.0

R0805A

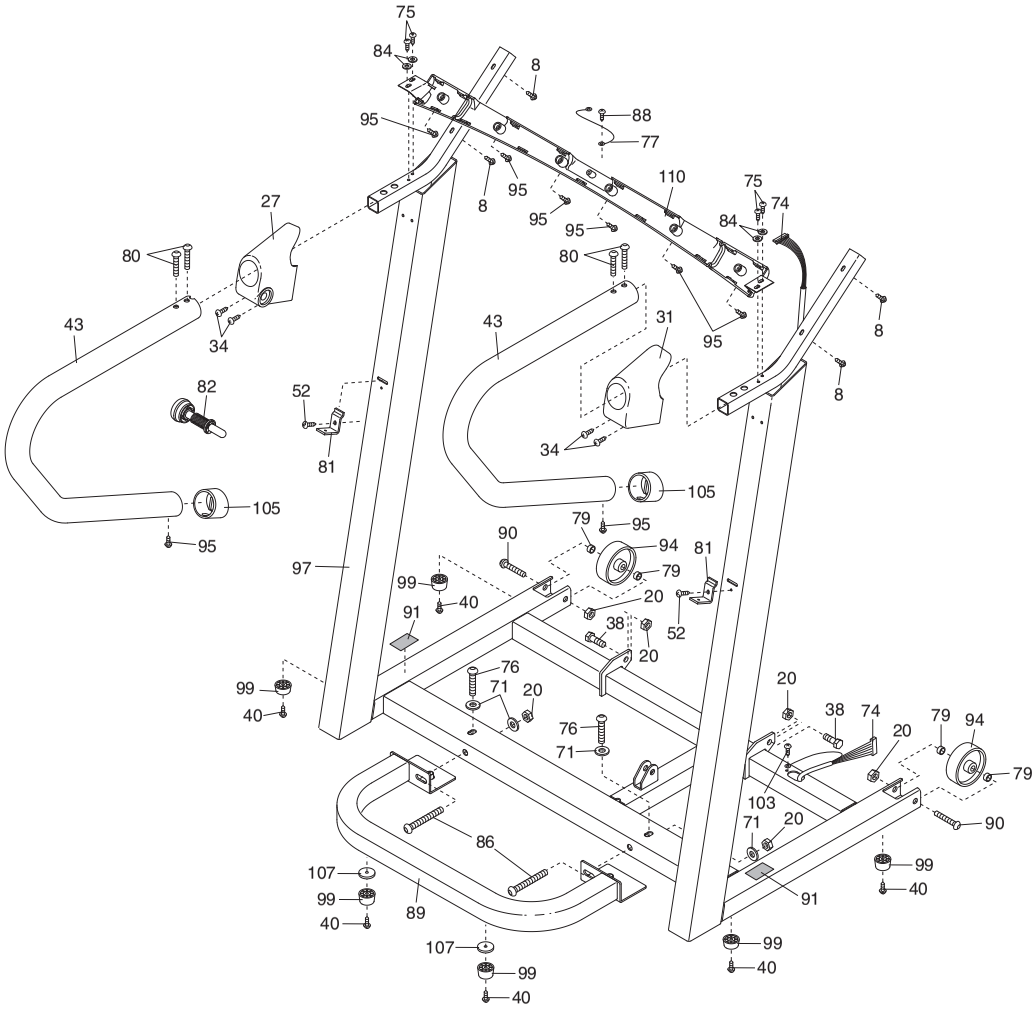

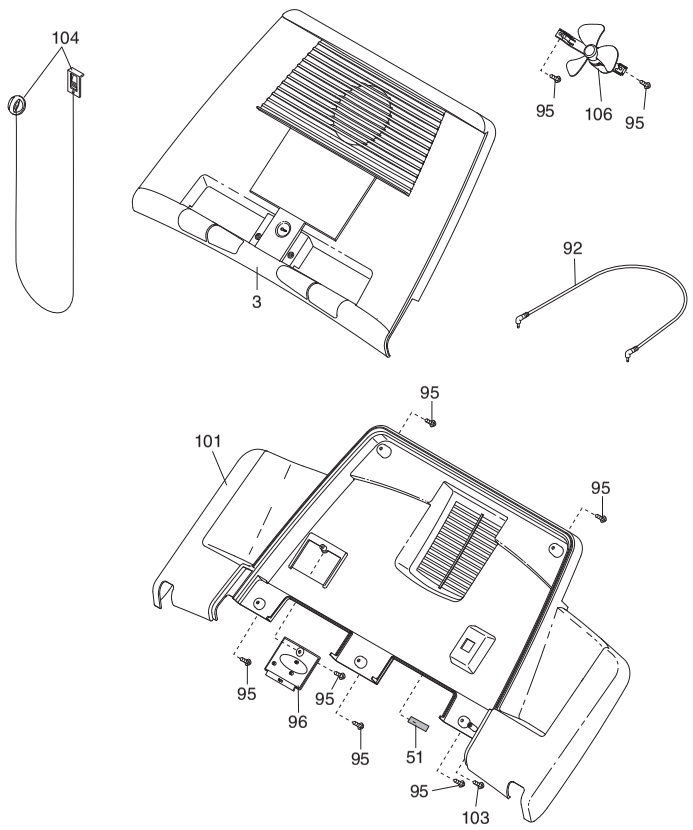

Get it fixed, at your home or ours!

Your Home

For repair – **in your home** – of **all** major brand appliances, lawn and garden equipment, or heating and cooling systems, **no matter who made it, no matter who sold it!**

For the replacement parts, accessories, and user's manuals that you need to do-it-yourself.

For Sears professional installation of home appliances and items like garage door openers and water heaters.

1-800-4-MY-HOME®
(1-800-469-4663)
www.sears.com

Anytime, day or night
(U.S.A. and Canada)
www.sears.ca

Our Home

For repair of carry-in products like vacuums, lawn equipment, and electronics, call or go on-line for the location of your nearest **Sears Parts and Repair Center.**

1-800-488-1222 Anytime, day or night (U.S.A. only)
www.sears.com

To purchase a protection agreement (U.S.A.) or maintenance agreement (Canada) on a product serviced by Sears:

1-800-827-6655 (U.S.A.) **1-800-361-6665** (Canada)

Para pedir servicio de reparación a domicilio, y para ordenar piezas:

1-888-SU-HOGARSM (1-888-784-6427)

SEARS

® Registered Trademark / ™ Trademark / SM Service Mark of Sears, Roebuck and Co.
® Marca Registrada / ™ Marca de Fábrica / SM Marca de Servicio de Sears, Roebuck and Co.

FULL 90 DAY WARRANTY

For 90 days from the date of purchase, if failure occurs due to defect in material or workmanship in this Sears Treadmill Exerciser, contact the nearest Sears Service Center throughout the United States and Sears will repair or replace the Treadmill Exerciser, free of charge. The drive motor is warranted for twelve (12) years from the date of purchase.

This warranty does not apply when the Treadmill Exerciser is used commercially or for rental purposes.

This warranty gives you specific legal rights, and you may also have other rights which vary from state to state.

Sears, Roebuck and Co., Dept. 817WA, Hoffman Estates, IL 60179

Part No. 228976 R0805A

Printed in USA © 2005 Sears, Roebuck and Co.