MODEL 672
SEMI-AUTOMATIC
BEDKNIFE GRINDER

ASSEMBLY
AND
SERVICE
MANUAL

WARNING

You must thoroughly read and understand this manual before assembling or maintaining the equipment, paying particular attention to the Warning & Safety instructions.

6727952 (1-08)

SAFETY INSTRUCTIONS

Safety Awareness Symbols are inserted into this manual to alert you to possible ***Safety Hazards***. Whenever you see these symbols, follow their instructions.

The ***Warning Symbol*** identifies special instructions or procedures which, if not strictly observed, **could result in personal injury.**

The ***Caution Symbol*** identifies special instructions or procedures which, if not correctly followed, **could result in damage to or destruction of equipment.**

1. **KEEP GUARDS IN PLACE** and in working order.
2. **REMOVE WRENCHES AND OTHER TOOLS.**
3. **KEEP WORK AREA CLEAN.**
4. **DON'T USE IN DANGEROUS ENVIRONMENT.** Don't use Grinder in damp or wet locations. Machine is for indoor use only. Keep work area well lit.
5. **KEEP ALL VISITORS AWAY.** All visitors should be kept a safe distance from work area.
6. **MAKE WORK AREA CHILD-PROOF** with padlocks or master switches.
7. **DON'T FORCE THE GRINDER.** It will do the job better and safer if used as specified in this manual.
8. **USE THE RIGHT TOOL.** Don't force the Grinder or an attachment to do a job for which it was not designed.
9. **WEAR PROPER APPAREL.** Wear no loose clothing, gloves, neckties, or jewelry which may get caught in moving parts. Nonslip footwear is recommended. Wear protective hair covering to contain long hair.
10. **ALWAYS USE SAFETY GLASSES.**
11. **SECURE YOUR WORK.** Make certain that the bedknife is securely fastened with the electromagnets provided before operating.
12. **DON'T OVERREACH.** Keep proper footing and balance at all times.
13. **MAINTAIN GRINDER WITH CARE.** Follow instructions in Service Manual for lubrication and preventive maintenance.
14. **DISCONNECT POWER BEFORE SERVICING.**
15. **REDUCE THE RISK OF UNINTENTIONAL STARTING.** Make sure the switch is OFF before plugging in the Grinder.
16. **USE RECOMMENDED ACCESSORIES.** Consult the manual for recommended accessories. Using improper accessories may cause risk of personal injury.
17. **CHECK DAMAGED PARTS.** A guard or other part that is damaged or will not perform its intended function should be properly repaired or replaced.
18. **KNOW YOUR EQUIPMENT.** Read this manual carefully. Learn its application and limitations as well as specific potential hazards.
19. **KEEP ALL SAFETY DECALS CLEAN AND LEGIBLE.** If safety decals become damaged or illegible for any reason, replace immediately. Refer to replacement parts illustrations in Service Manual for the proper location and part numbers of safety decals.
20. **DO NOT OPERATE THE GRINDER WHEN UNDER THE INFLUENCE OF DRUGS, ALCOHOL, OR MEDICATION**

SAFETY INSTRUCTIONS

IMPROPER USE OF GRINDING WHEEL MAY CAUSE BREAKAGE AND SERIOUS INJURY.

Grinding is a safe operation if the few basic rules listed below are followed. These rules are based on material contained in the ANSI B7.1 Safety Code for "Use, Care and Protection of Abrasive Wheels". For your safety, we suggest you benefit from the experience of others and carefully follow these rules.

DO

1. **DO** always **HANDLE AND STORE** wheels in a **CAREFUL** manner.
2. **DO VISUALLY INSPECT** all wheels before mounting for possible damage.
3. **DO CHECK MACHINE SPEED** against the established maximum safe operating speed marked on wheel.
4. **DO CHECK MOUNTING FLANGES** for equal and correct diameter.
5. **DO USE MOUNTING BLOTTERS** when supplied with wheels.
6. **DO** be sure **WORK REST** is properly adjusted.
7. **DO** always **USE A SAFETY GUARD COVERING** at least one-half of the grinding wheel.
8. **DO** allow **NEWLY MOUNTED WHEELS** to run at operating speed, with guard in place, for at least one minute before grinding.
9. **DO** always **WEAR SAFETY GLASSES** or some type of eye protection when grinding.
10. **DO TURN OFF COOLANT** before stopping to avoid creating an out-of-balance condition.

DON'T

1. **DON'T** use a cracked wheel or one that **HAS BEEN DROPPED** or has become damaged.
2. **DON'T FORCE** a wheel onto the machine **OR ALTER** the size of the mounting hole - if wheel won't fit the machine, get one that will.
3. **DON'T** ever **EXCEED MAXIMUM OPERATING SPEED** established for the wheel.
4. **DON'T** use mounting flanges on which the bearing surfaces **ARE NOT CLEAN, FLAT AND FREE OF BURRS.**
5. **DON'T TIGHTEN** the mounting nut **EXCESSIVELY.**
6. **DON'T** grind on the **SIDE OF THE WHEEL** (see Safety Code B7.2 for exception).
7. **DON'T** start the machine until the **WHEEL GUARD IS IN PLACE.**
8. **DON'T JAM** work into the wheel.
9. **DON'T STAND DIRECTLY IN FRONT** of a grinding wheel whenever a grinder is started.
10. **DON'T FORCE GRINDING** so that motor slows noticeably or work gets hot.

AVOID INHALATION OF DUST generated by grinding and cutting operations. Exposure to dust may cause respiratory ailments. Use approved NIOSH or MSHA respirators, safety glasses or face shields, and protective clothing. Provide adequate ventilation to eliminate dust, or to maintain dust level below the Threshold Limit Value for nuisance dust as classified by OSHA.

This machine is intended for grinding the bedknife from a reel mowing unit ONLY. Any use other than this may cause personal injury and void the warranty.

This machine is intended for indoor use only.

To assure the quality and safety of your machine and to maintain the warranty, you MUST use original equipment manufactures replacement parts and have any repair work done by a qualified professional.

ALL operators of this equipment must be thoroughly trained BEFORE operating the equipment.

Do not use compressed air to clean grinding dust from the machine. This dust can cause personal injury as well as damage to the grinder. Do not use a power washer to clean the machine.

WARNING

FACTORY PRESET. FLASHING GREEN LIGHT INDICATES LOW VOLTAGE, FLASHING RED LIGHT INDICATES HIGH VOLTAGE DELIVERED TO GRINDER

Low Voltage Relay

The grinder is equipped with a high-low voltage relay which is factory preset at 100-140 VAC. If the power supply line does not deliver 100-140 VAC power under load, the relay will open and trip out the starter. If this occurs, your power supply line is incorrect and must be correct before proceeding further with the grinder.

CONTENTS

SPECIFICATIONS

Electrical Requirements ..... 115VAC 50/60 Hz, 15-amp circuit
Net Weight ..... 820 lbs [372 kg]
Shipping Weight ..... 920 lbs [417 kg]
Maximum Grinding Length ..... 34 in. [863 mm]
Sound Level ..... Less than 75 Dba

SKILL AND TRAINING REQUIRED FOR SERVICING

This Service Manual is designed for technicians who have the necessary mechanical and electrical knowledge and skills to reliably test and repair the Bedknife Grinder. For those without that background, service can be arranged through a local distributor.

This Manual presumes that you are already familiar with the normal operation of the Grinder. If not, you should read the Operators Manual, or do the servicing in conjunction with someone who is familiar with its operation.

PERSONS WITHOUT THE NECESSARY KNOWLEDGE AND SKILLS SHOULD NOT OPEN THE CONTROL BOX OR ATTEMPT ANY INTERNAL TROUBLESHOOTING, ADJUSTMENTS, OR PARTS REPLACEMENT.

If you have questions not answered in this manual, please call your distributor. They will contact the manufacturer if necessary.

TORQUE REQUIREMENTS

Throughout this manual we refer to torque requirements as "firmly tighten" or the like. For more specific torque values, refer to the information below.

Bolts Going into a Nut, or Into a Thread Hole in Steel.
Refer to table at the right.

Bolts Going into a Thread Hole in Aluminum.
Use the Grade 2 values in the table at the right.

Socket-Head Screws
Use the Grade 8 values in the table at the right.

Machine Screw

No. 6 Screws:	11in.-lbs [0.125 kg-m]
No. 8 Screws:	20 in.-lbs [0.23 kg-m]
No. 10 Screws:	32 in.-lbs [0.37kg-m]

	GRADE 2	GRADE 5	GRADE 8
			
	SMOOTH HEAD	3 MARKS on HEAD	6 MARKS on HEAD
1/4 In. thread	6 ft-lbs (0.8 kg-m)	9 ft-lbs (1.25 kg-m)	13 ft-lbs (1.8 kg-m)
5/16 In. thread	11 ft-lbs (1.5 kg-m)	18 ft-lbs (2.5 kg-m)	28 ft-lbs (3.9 kg-m)
3/8 In. thread	19 ft-lbs (2.6 kg-m)	31 ft-lbs (4.3 kg-m)	46 ft-lbs (6.4 kg-m)
7/16 In. thread	30 ft-lbs (4.1 kg-m)	50 ft-lbs (6.9 kg-m)	75 ft-lbs (10.4 kg-m)
1/2 In. thread	45 ft-lbs (6.2 kg-m)	75 ft-lbs (10.4 kg-m)	115 ft-lbs (15.9 kg-m)

ASSEMBLY INSTRUCTIONS

NOTE: For clarity, the Grinder is shown on the following pages without the **optional** carriage bellows installed.

UNPACK THE CARTONS

NOTE: Before you install the machine, read the following assembly procedure completely. Then study "Getting to Know Your Bedknife Grinder" in the Operators Manual.

Use care when unpacking. Double-check the packing cartons for any miscellaneous items before discarding.

Inspect all items for shipping damage as they are removed from the shipping containers. If you find any damage, notify the carrier's claims agent and do not proceed further until the damage has been inspected by the agent. Refer also to the "Shipping and Receiving Instructions" packed with the unit.

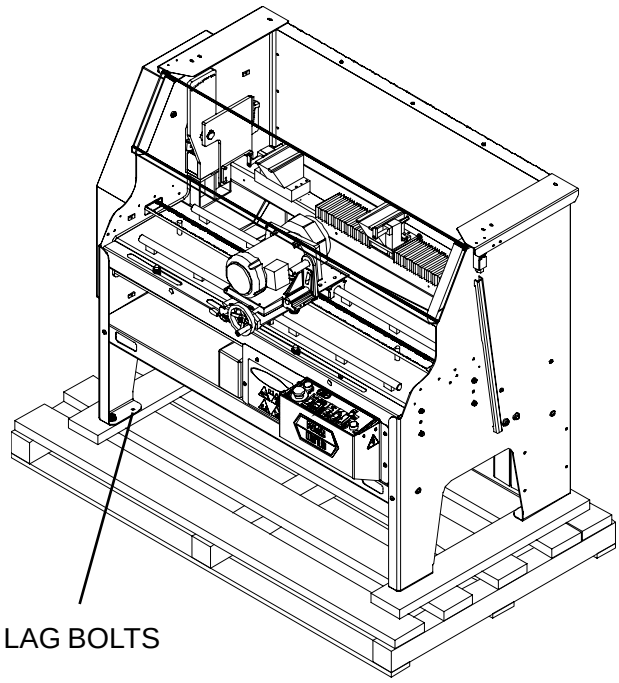

FIG. 1

Remove the Grinder from the Pallet

To remove the Grinder from the wood pallet:

1. Unbolt the Grinder legs from the bottom pallet. (There are 2 - Lag bolts on each leg. See Fig 1.)

2. The Grinder's four leveling feet (FIG. 2) are seated in countersunk holes in the pallet. With a fork lift or other power equipment, raise the grinder from the wood base and set it in its final position. Lift under bottom tray, forks must reach to the rear of the machine and extent past or the Grinder may be damaged while lifting.

THE GRINDER WEIGHS 780 LBS [354 KG]. TO LIFT, USE POWER EQUIPMENT

After the Grinder is set in place, remove the shipping strap that secures the grinding head and carriage to the left end of the machine during shipment. Discard the leg screw and the shipping strap.

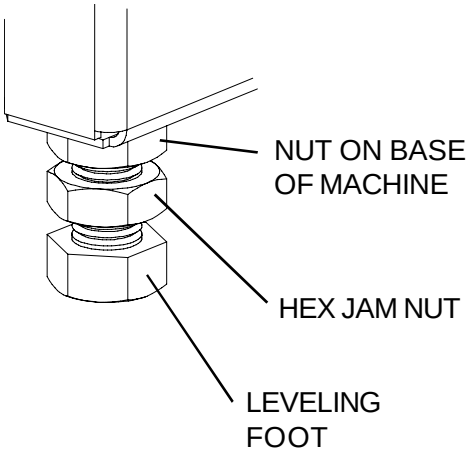

FIG. 2

LOCATE AND LEVEL THE GRINDER

Set the Grinder on a level concrete floor, on a single uncracked slab of concrete.

If the unit must be located near a wall, allow adequate space for operating and servicing. Refer to FIG. 3 for recommended and alternate locations near a wall.

Place a level on the front carriage rail near the center of the machine and check the level from left to right. See FIG. 4. Adjust the leveling feet until the machine is level.

Place the level across the front and rear carriage rails near the left end of the machine. See FIG. 5. Adjust the two leveling feet on the left end until the rear rail (the one closest to the coolant tank) is slightly lower than the front rail--so any coolant on the carriage, main base, or optional bellows will drain back into the coolant tray.

Place the level across the front and rear carriage rails near the right end of the carriage bed. Level the right end in the same way as the left end. For grinding accuracy, the two ends must have the identical backward slant within +/- .03" [.75 mm] so the frame is not twisted.

Recheck the level in both directions. When satisfactory, tighten the hex jam nuts on the leveling feet securely against the nuts welded to the bottom of the base. See FIG. 2. Don't turn the leveling feet when tightening.

Again recheck the level after the nuts are firmly tightened.

! FOR GRINDING ACCURACY, THE MACHINE DOES NOT HAVE TO BE PERFECTLY LEVEL. HOWEVER, IT IS IMPORTANT THAT FRONT-TO-BACK LEVELING BE IDENTICAL AT BOTH ENDS OF THE MACHINE.

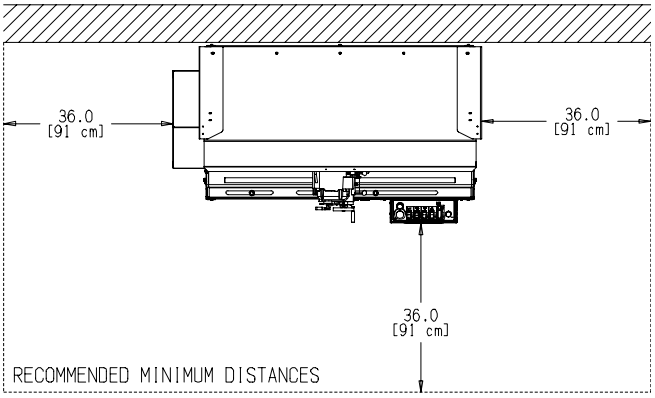

FIG. 3

Leveling Side-to-Side

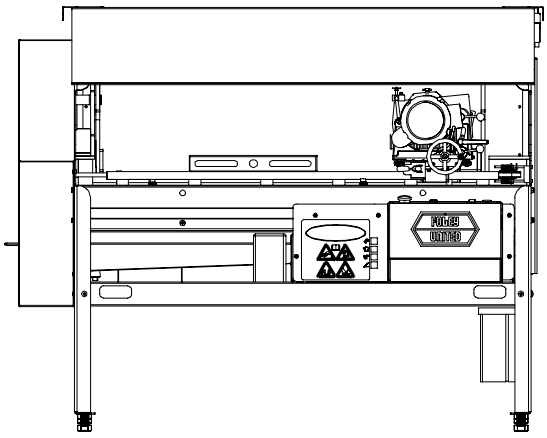

FIG. 4

Leveling Front-to-Back

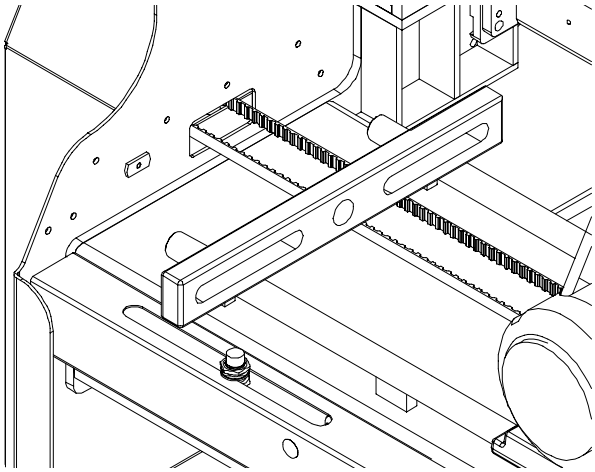

FIG. 5

APPLY POWER

BEFORE YOU APPLY POWER TO THE GRINDER, REFER TO THE "IMPORTANT GROUNDING INSTRUCTIONS" ON PAGE 9.

115 Volt Model Only. Plug the control box power cord into a standard 115V AC 15-amp grounded receptacle. See FIG. 6.

220 Volt Model Only. For 220 Volt Applications order Part No. 6720951, which includes a 220 to 110 Volt Step Down Transformer. See Details on page 9.

FIG. 6

IT IS RECOMMENDED THAT THIS BEDKNIFE GRINDER HAS ITS OWN PERMANENT POWER CONNECTION FROM THE POWER DISTRIBUTION PANEL, WITH NO OTHER MAJOR POWER DRAW EQUIPMENT ON THE SAME LINE.

IT IS REQUIRED THAT THE POWER DELIVERED TO THIS GRINDER IS 115 VAC - 15 AMPS. THE TOLERANCE ON THIS POWER REQUIREMENT IS +/- 5%. THEREFORE THE MINIMUM VOLTAGE REQUIREMENT IS 109VAC WITH 15 AMPS. VOLTAGE MUST BE CHECKED WITH ALL EQUIPMENT UNDER LOAD (OPERATING) ON THE CIRCUIT.

DO NOT OPERATE THIS GRINDER WITH AN EXTENSION CORD.

DO NOT OPERATE THIS GRINDER ON A GROUND FAULT INTERUPTER (GFI) CIRCUIT. THE (GFI) WILL TRIP CONSTANTLY.

PROPER GROUNDING OF THE RECEPTACLE GROUND IN YOUR BUILDING MUST BE VERIFIED. IMPROPER GROUNDING IN YOUR BUILDING MAY CAUSE THE GRINDER TO MALFUNCTION.

The grinder is equipped with a high-low voltage relay which is factory preset at 100-140 VAC. If the power supply line does not deliver 100-140 VAC power under load, the relay will open and trip out the starter. If this occurs, your power supply line is incorrect and must be correct before proceeding further with the grinder.

When installing the grinder, the following guidelines should be used to establish the wire size between the power panel in your building and the grinder receptacle. Note that the wiring in your building must be per code between main power panels and sub panels.

FOR 15 AMP RATED LARGE MACHINES

For 0 to 30 Feet from panel to receptacle = Use 14 Ga. Wire.
For 30 to 50 Feet from panel to receptacle = Use 12 Ga. Wire.
For 50 to 80 Feet from panel to receptacle = Use 10 Ga. Wire.
For 80 to 140 Feet from panel to receptacle = Use 8 Ga. Wire.

For 0 to 15 Meters from panel to receptacle = Use 2.5mm Wire.
For 15 to 42 Meters from panel to receptacle = Use 4.0mm Wire.

CHARGING THE UNINTERUPTABLE POWER SUPPLY

The Uninteruptable Power Supply (UPS) comes from the supplier with no charge. When the machine is ready for operation, plug it in and turn on the UPS. The battery must charge for a minimum of 24 hours. For UPS functions, refer to the separate manual supplied with the grinder.

THE UPS WILL NOT FUNCTION PROPERLY IF THERE IS INSUFFICIENT POWER TO THE MACHINE. INSUFFICIENT POWER MAY ALLOW THE BEDKNIFE TO SLIP OR MOVE ON THE MAGNETS WHILE GRINDING. SEE PREVIOUS PAGE FOR POWER REQUIREMENTS.

FOR 220 V 50 or 60Hz applications Product No. 6720951 should be ordered.

6720951 includes a 2 KVA 220 Volt Step Down to 110 volt 50/60 Hz transformer which is prewired.

The wiring diagram is shown in FIG. 7.

The power cord has no connector. A connector which is appropriate for your locality and 220 volt, 8 amp application should be installed.

USE ONLY A QUALIFIED ELECTRICIAN TO COMPLETE THE INSTALLATION.

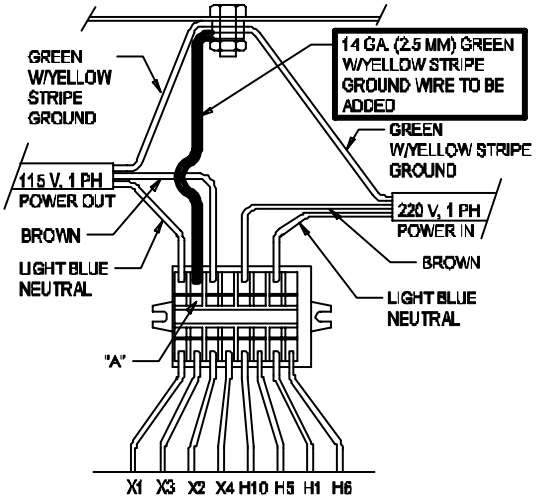

INDIVIDUALLY WIRE NUT TRANSFORMER LEADS H2, H3, H4, H7, H8 AND H9

INSTALL THE GREEN W/YELLOW STRIPE WIRE SUPPLIED INTO THE TERMINAL BLOCK IN THE HOLE OPPOSITE WIRE X3 AS SHOWN. TO INSTALL THE WIRE INSERT A SMALL SCREWDRIVER INTO THE CAVITY MARKED "A" TO OPEN THE WIRE HOLE.

ATTACH THE OTHER END OF THE GREEN W/YELLOW STRIPE WIRE SUPPLIED TO THE GROUND STUD ON THE TRANSFORMER.

FIG. 7

IMPORTANT GROUNDING INSTRUCTIONS

In case of a malfunction of breakdown, grounding reduces the risk of electrical shock by providing a path of least resistance for electrical current.

This Grinder has an electrical cord with an equipment grounding conductor and a grounding plug. The plug must be plugged into a matching outlet that is properly installed and grounded according to all local or other appropriate electrical codes and ordinances.

Before plugging in the Grinder, make sure it will be connected to a supply circuit protected by a properly sized circuit breaker or fuse. SEE SERIAL NUMBER PLATE FOR FULL LOAD AMP RATING OF YOUR MACHINE.

Never modify the plug provided with the machine. If it won't fit the outlet, have a proper outlet and circuit installed by a qualified electrician.

ALWAYS PROVIDE A PROPER ELECTRICAL GROUND FOR YOUR MACHINE. AN IMPROPER CONNECTION CAN CAUSE A DANGEROUS ELECTRICAL SHOCK. IF YOU ARE UNSURE OF THE PROPER ELECTRICAL GROUNDING PROCEDURE, CONTACT A QUALIFIED ELECTRICIAN.

INSTALL THE OPTIONAL CARRIAGE BELLOWS (if ordered)

Optional carriage bellows are available to keep excess grindings, dirt, etc. out of the carriage assembly. To install the two bellows:

1. Remove the left side actuator guard panel.
2. Remove the two rail wiper brackets from the bearings located toward the tooling bar -two screws each. (See Fig. 8)
3. Attach the outer end of each bellows to the Grinder leg panel. (See Fig. 9.) Use six bolts, and hex nuts on the left leg. The bolt heads go on the bellows side of the brackets. Attach the Bellows End Bracket with 4 screws and lock washers.
4. Attach the right and left brackets to the underside of the carriage using two 1/4" socket head screws on each side. (You will need to move the head forward to access the rear screw holes and then move it back to access the front mounting holes.) Next attach the rear protective plate to the brackets just installed using two 1/4" screws and lock washers. Last attach the bellows to the brackets with the bolt heads on the bellows side of the brackets.
5. Press the bellows down until it snaps onto the carriage rails.
6. Reattach the left side actuator guard panel.

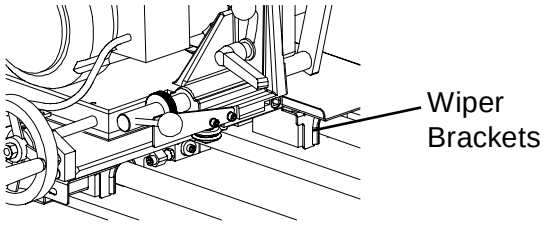

FIG. 8

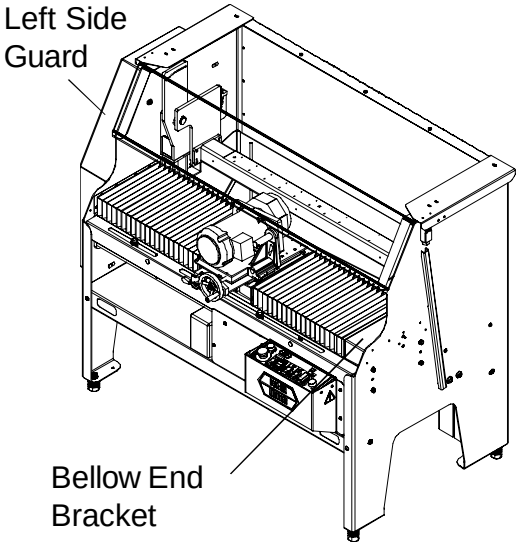

FIG. 9

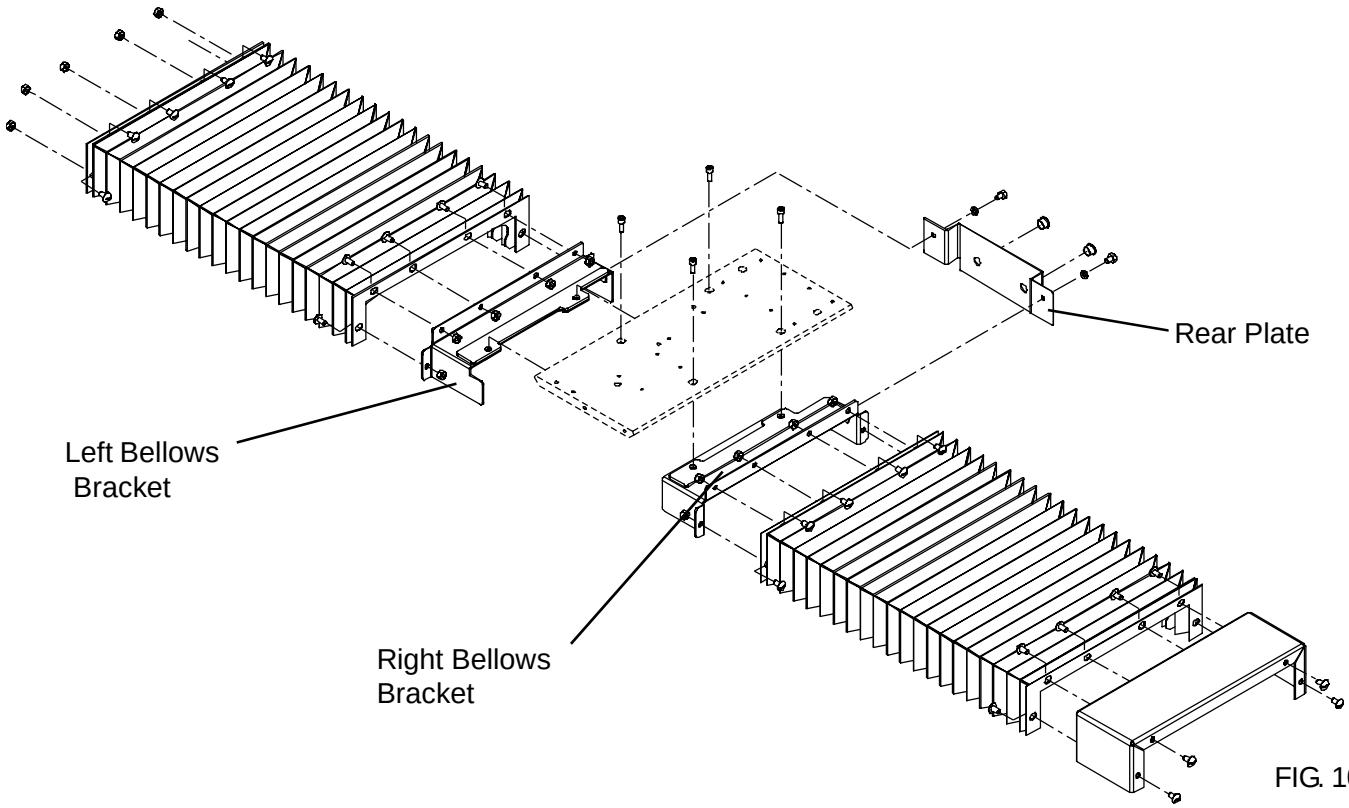

FIG. 10

INSTALL THE COOLANT

THE COOLANT RATIO AS SPECIFIED MUST BE USED. TO HIGH A CONCENTRATION OR LOW A CONCENTRATION WILL CAUSE CORROSION AND PERFORMANCE PROBLEMS.

Be sure the COOLANT PUMP switch is OFF. Mix (Part No. 3708620) coolant in the coolant tank, at a ratio of 50 parts water to 1 part concentrate. This will take about 4.5 gallons of water and .75 pints of concentrate (17 liters of water and 0.35 liter of concentrate).

Refer also to the label on the coolant container.

When installing the coolant is complete, the coolant level in the main tank must be 1/4-1/2" [6-12 mm] above the top edge of the sump.

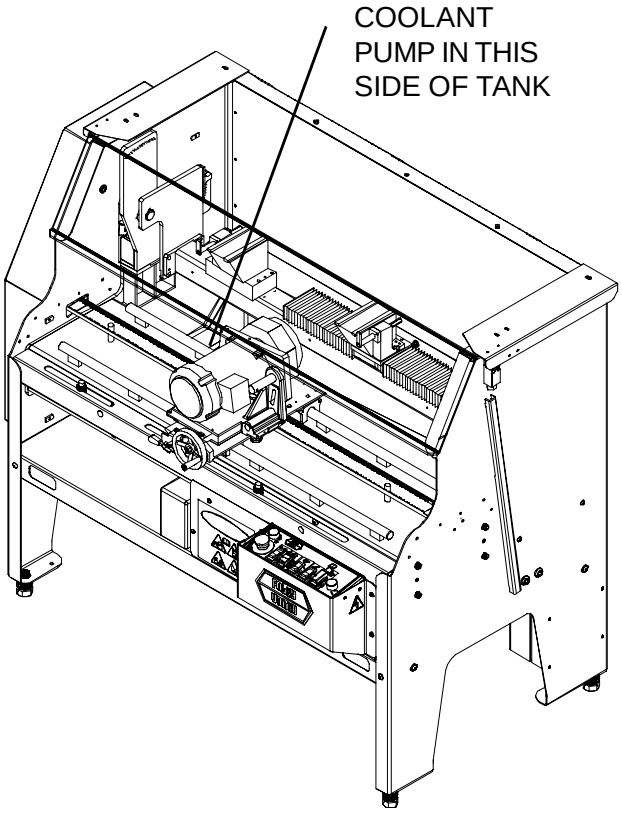

FIG. 11

CHECK THE COOLANT PUMP

Turn all control panel switches OFF. Close the guard door and press START. Press Coolant Pump Switch to ON. Check that the Coolant System functions properly. Be prepared to press STOP if there is any problem.

NOTE: If the unit doesn't begin to pump coolant, verify that the coolant pump circuit breaker on the control panel has not tripped. If tripped, push in to reset. See FIG. 12.

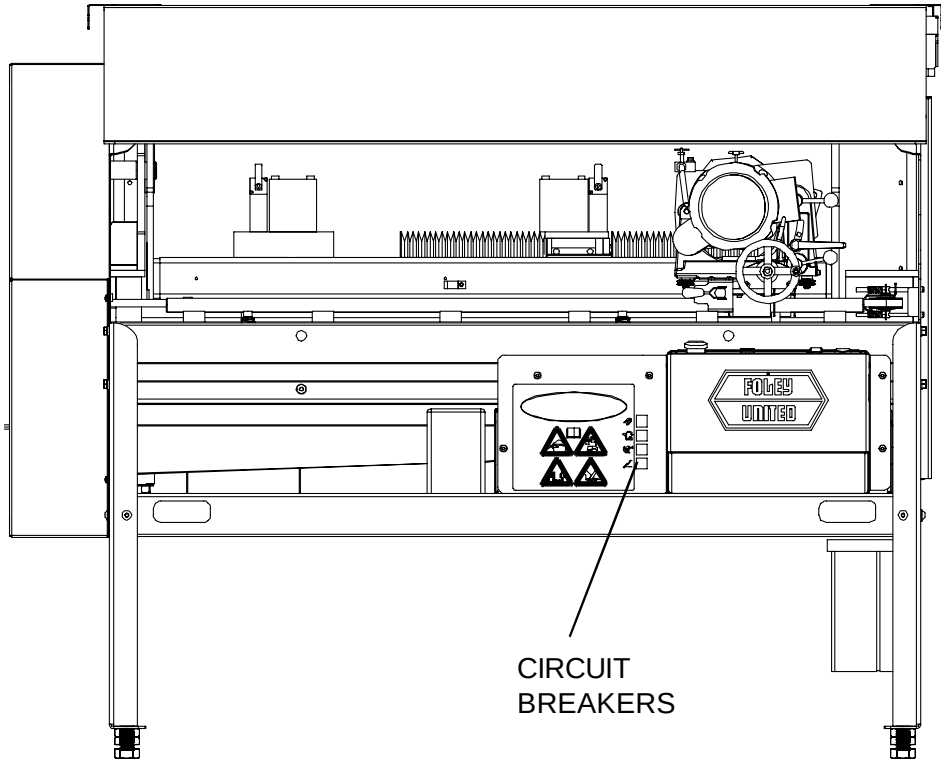

FIG. 12

CHECK THE CARRIAGE TRAVERSE

Move the proximity switch assemblies to the ends of the slots.

Visually check that the grinding head will be able to traverse to both sides of the machine without contacting any components.

Turn all control panel switches OFF. Set the TRAVERSE FT/MIN knob to zero. Close the guard door and press START. Press CARRIAGE TRAVERSE to ON. Set TRAVERSE FT/MIN to a low speed, and check that the grinding head runs through a complete traverse cycle. Be prepared to press STOP if there is any interference. Watch carefully for obstructions to the head travel, and check that the grinding motor cord and proximity switch cords are not stretched.

NOTE: If the unit doesn't begin a traverse cycle, verify the 15 amp circuit breaker inside the control box.

CHECK THE GRINDING MOTOR

Turn all control panel switches OFF. Close the guard door to connect the interlock. Press START. Press Grinding Motor Switch to ON. Check that the grinding head runs properly. Be prepared to press STOP if there is any problem.

NOTE: If the grinding head doesn't begin properly, verify the 15 amp circuit breaker inside the control box.

MAKE FINAL PREPARATIONS FOR OPERATION

Carefully read the operating instructions in the Operators Manual.

First, study the pages titled "Getting to Know Your Grinder" and "General Operating Information" for important background explanations about the machine and about bedknife grinding. **Then,** read the "Operating Instructions" pages for step-by-step procedures on mounting the bedknife and grinding its top and front faces.

MAINTENANCE

DAILY MAINTENANCE IS SPECIFIED ON PAGE 6 OF THE OPERATOR'S MANUAL, AND IS TO BE PERFORMED BY THE OPERATOR.

LISTED BELOW ARE PERIODIC MAINTENANCE ITEMS TO BE PERFORMED BY YOUR COMPANY'S MAINTENANCE DEPARTMENT:

1. Lift the bellows located on adjustable electromagnet (see FIG 13) and wipe off the bearing rail weekly. Every month throughly clean the rail and flood spray with CRC 3-36 or an equivalent lubricant. Run the adjustable electromagent back and forth through its full range of travel. With a clean rag, wipe off the excess lubricant. Run the carriage back and forth and wipe the rail after each pass. Repeat until the rail feels dry.

2. Lift the optional traverse carriage bellows, (See FIG. 14) if used, throughly clean the traverse rails, flood spray with CRC 3-36 or an equivalent lubricant. Run the carriage back and forth through its full range of travel. With a clean rag, wipe off the excess lubricant. Run the carriage back and forth and wipe the rail after each pass. Repeat until the rail feels dry..

3. Clean the interior and the top cover of the Coolant Tank as necessary and at least every 3 months.

4. Replace the four foam rail wipers (FIG. 15) every 6 months of operation. Note: Wipers are removed if optional bellows are installed.

5. Clean the exterior of the diamond dresser arm and spray with CRC 3-36 or equivalent at least every 6 months.

6. Clean the exterior of the grinding head height adjuster and spray with CRC 3-36 or equivalent at least every 6 months. Move head through full range of motion to maintian function.

7. Clean the exterior of the right side tooling alignment adjuster and spray with CRC 3-36 or equivalent at least every 6 months.

8. Check the brushes on the auto traverse drive motor once every 36 months. Replace as necessary.

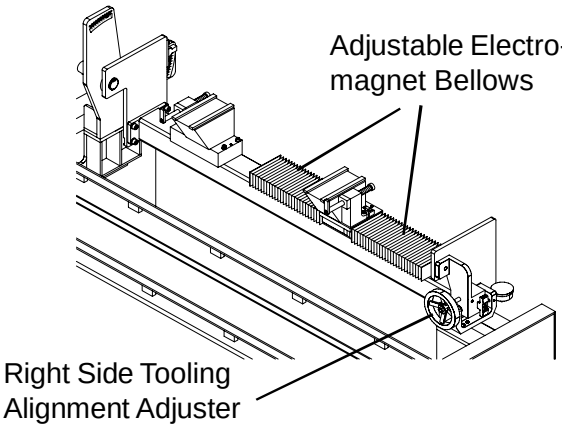

FIG. 13

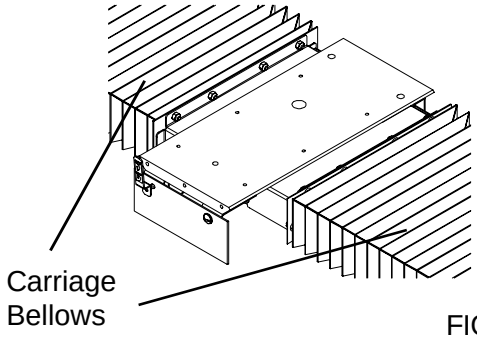

FIG. 14

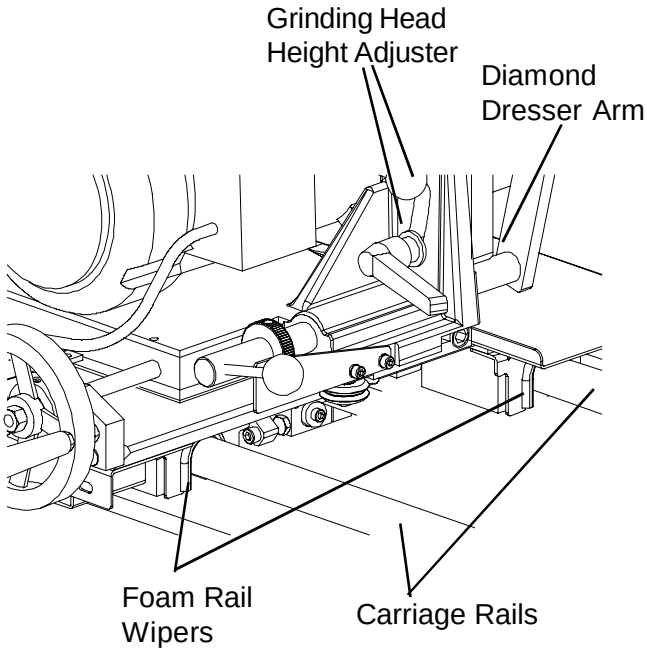

FIG. 15

THE UNINTERUPTABLE POWER SUPPLY (UPS) WHICH IS USED AS A BACKUP TO HOLD THE BEDKNIFE TO THE ELECTROMAGNETS DURING A POWER INTERUPTION HAS A BATTERY. THIS UPS HAS A THREE TO FOUR YEAR LIFE AND MUST BE REPLACED AFTER THREE TO FOUR YEARS OF SERVICE LIFE. SEE THE PARTS LIST FOR REPLACEMENT UPS PART NUMBER.

LUBRICATION FOR EXTENDED DOWN TIME/STORAGE:

If the machine will be shut down for more than one month, flood the traverse shafts and other appropriate parts with lubricant as outlined on previous page, and leave the lubricant in place until the unit will be used again. Then repeat the lubrication procedure before operating. This procedure applies to the bearing rail and bearing for the moveable right side electomagnet as well.

CLEANING AND MAINTENANCE GUIDELINES FOR POLYCARBONATE WINDOWS

Cleaning Instructions

DO NOT USE GASOLINE
Adherence to regular and proper cleaning procedures is recommended to preserve appearance and performance.

Washing to Minimize Scratching

Wash polycarbonate windows with a mild dish washing liquid detergent and lukewarm water, using a clean soft sponge or a soft cloth. Rinse well with clean water. Dry thoroughly with a moist cellulose sponge to prevent water spots. Do not scrub or use brushes on these windows. Also, do not use butyl cellosolve in direct sunlight.

Fresh paint splashes and grease can be removed easily before drying by rubbing lightly with a good grade of VM&P naphtha or isopropyl alcohol. Afterward, a warm final wash should be made, using a mild dish washing liquid detergent solution and ending with a thorough rinsing with clean water.

Minimizing Hairline Scratches

Scratches and minor abrasions can be minimized by using a mild automobile polish. Three such products that tend to polish and fill scratches are Johnson paste Wax, Novus Plastic Polish #1 and #2, and Mirror Glaze plastic polish (M.G. M10). It is suggested that a test be made on a corner of the polycarbonate window with the product selected following the polish manufacturer's instructions.

Some Important "DON'TS"

- **DO NOT** use abrasive or highly alkaline cleaners on the polycarbonate windows.
- **Never** scrape polycarbonate windows with squeegees, razor blades or other sharp instruments.
- Benzene, gasoline, acetone or carbon tetrachloride should **NEVER** be used on polycarbonate windows.
- **DO NOT** clean polycarbonate windows in hot sun or at elevated temperatures.

Graffiti Removal

- Butyl cellosolve, (for removal of paints, marking pen inks, lipstick, etc.)
- The use of masking tape, adhesive tape or lint removal tools works well for lifting off old weathered paints.
- To remove labels, stickers, etc., the use of kerosene, VM&P naphtha or petroleum spirits is generally effective. When the solvent will not penetrate sticker material, apply heat (hair dryer) to soften the adhesive and promote removal.

  GASOLINE SHOULD NOT BE USED!

INSTRUCTION SHEET - MAGNET REPAIR ASSEMBLY

If a magnet is damaged or fails on your 672 ACCU-Pro Bedknife Grinder or if the linear bearing fails, follow the detailed instructions below.

Contact Foley United Customer Service Department at 800-225-9810 and get a Return Goods Authorization (RGA) number.

Your repair Part No. is 6729510 Magnet Repair Assembly - INA.

At the time you contact Foley United Customer Service Department you must give them your grinder Serial Number and all contact information for communication on the repairs. Your grinder has an INA linear bearing that uses a shipping guide. This shipping guide was included in your Product packet assembly. If you do not have the shipping guide you must call the factory and have one sent to you before you attempt to remove that bearing. To use the shipping guide you must perfectly align the bearing shipping guide to the profile rail and slide the bearing off the profile rail and immediately onto the bearing shipping guide.

NOTE: FAILURE TO USE THE INA BEARING SHIPPING GUIDE WILL DAMAGE THE BEARING AND CAUSE YOU TO PURCHASE A REPLACEMENT BEARING.

Disconnect the electrical wiring for both elecromagnets and coil up next to the electromagnets. Remove the left side fixed magnet assembly. Drive down the two roll pins and remove the four attaching screws, saving the screws. Remove the right side moveable magnet assembly. Remove both bellows and the lock block, saving all fasteners. Great care must be taken when removing the moveable magnet assembly from the profile rail. See the warning above.

See FIG. 16 which illustrates what parts to return to Foley United. Make certain the bearing shipping guide is in place and then wrap the assembly in heavy paper and tape. Package the two magnet assemblies in a very sturdy shipping container (Note: The magnet assemblies weigh approximately 30 lbs. each) with adequate filler material around and between the magnet assemblies.

INADEQUATE PACKAGING MAY CAUSE SHIPPING DAMAGE TO THE MAGNETS AND REQUIRE REPLACEMENT OF ONE OR BOTH MAGNETS.

This Repair Assembly includes labor to regrind the magnet set, but does not include replacement parts. When the magnet assemblies are returned to Foley United, we test the magnets. Foley United Customer Service Department will then contact you with a list of parts that are required to repair your magnet assemblies. Then we will install the new parts and regrind both magnets on our production fixture. The magnet assemblies are then retested and returned to you for reinstallation.

On reinstallation of the left magnet assembly, reinstall with four screws just snugged up, then drive the two new roll pins supplied to you in the return package. Then tighten the four mounting screws.

On reinstallation of the right magnet assembly, reinstall by sliding the linear bearing onto the profile rail. Again, the installation of the INA bearing is critical. You must slide the bearing off the bearing shipping guide and onto the profile rail with perfect alignment between the guide and the rail, or bearing damage will result. Once the bearing is successfully on the profile rail, pump three pumps of grease from a standard grease gun into the bearing. Wipe off any excess grease that is visible. Then remove the grease fitting and install the plug supplied to you in the return package. The plug must be below the surface of the bearing. Now reinstall the lock block and bellows using the saved fasteners. The screw indicated in FIG. 16 must be left installed in both sides of the INA bearing or the bearing will come apart. The lock block and bellows are designed to use the remaining three screws on the INA bearing for each side for attachment, avoiding the retained screw in the bearing. Reconnect and reattach the wiring for both magnets. Replacement cable ties are supplied to you in the return package. Your grinder should then be operational.

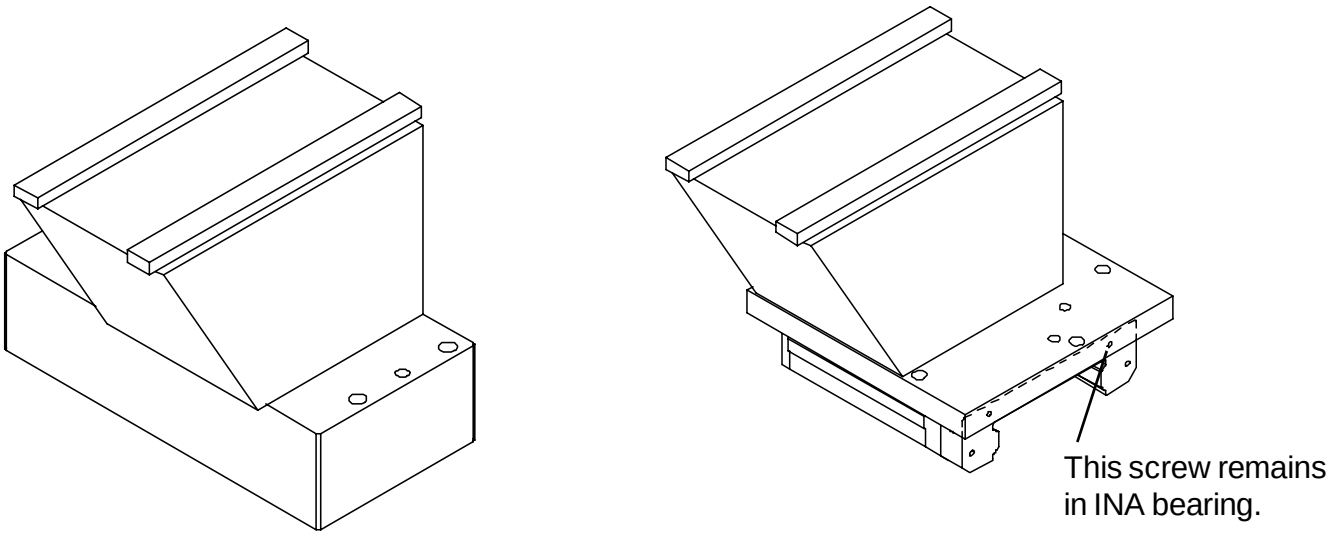

FIG. 16

CARRIAGE LINEAR BEARING REPLACEMENT

STEP 1--Remove the optional carriage bellows (if used) from the carriage. (See page 10)

STEP 2--Remove the four screws of one linear bearing and slide the linear bearing off the end of the carriage shaft.

STEP 3--Insert a new linear bearing onto the end of the carriage shaft with the tension adjustment screw pointing outward. See FIG. 17.

STEP 4--Adjust the tension screw of the linear bearing so when you radially rotate the linear bearing around the carriage shaft there should be no free play between the linear bearing and the carriage shaft.

NOTE: Tension is too tight if you feel a cogging action when you rotate the linear bearing around the shaft. This cogging is from the skidding of the bearing on the shaft and indicates the tension screw is to tight. Sliding the bearing block back and forth should be a smooth uniform motion.

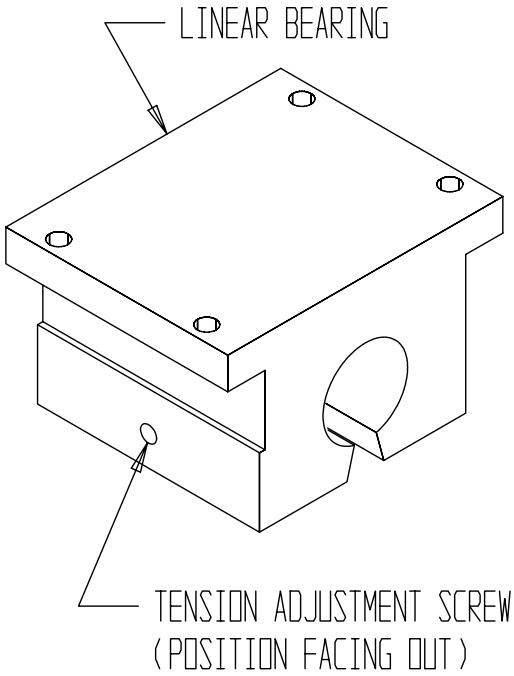

FIG. 17

SETTING THE BEARING TENSION CORRECTLY IS CRITICAL TO PROPER GRINDING. BEARINGS WHICH ARE TOO TIGHT OR TOO LOOSE WILL CAUSE POOR GRIND QUALITY. ALSO, BEARINGS WHICH ARE TOO TIGHT WILL HAVE SUBSTANTIALLY SHORTER LIVES AND MAY DAMAGE THE SHAFT.

STEP 5--Slide linear bearing under carriage and attach with the four screws.

Repeat Steps 2 through 5 with the other two linear bearings.

STEP 6--After all three linear bearings are secured to the carriage, check for correct bearing tension. The bearing tension is correct when you try to lift the carriage and can feel no carriage movement. If there is movement this means there is up and down free play. The most dependable method of checking free play is to use a magnetic base dial indicator attached to the traverse frame weldment and reading the vertical movement above each bearing. This movement should be within .001" [.03 mm]. When pulling the carriage in the traversing direction, there should be only approximately a three lbs force, with the belt clamp disengaged. To double check the assembly, slide the carriage from "end of travel" to "end of travel", it should have very uniform resistance through its full range.

TO ADJUST THE PROXIMITY SWITCHES

For the proximity switches to work properly and reverse the direction of the carriage at each end of a traverse, a distance of 3/16 in. +/- 1/32 [4.75 mm +/- 0.75] must be maintained between the top of the switch and the actuator bracket on the bottom of the carriage. See FIG. 18.

To adjust the clearance, loosen one of the switch mounting nuts while tightening the other.

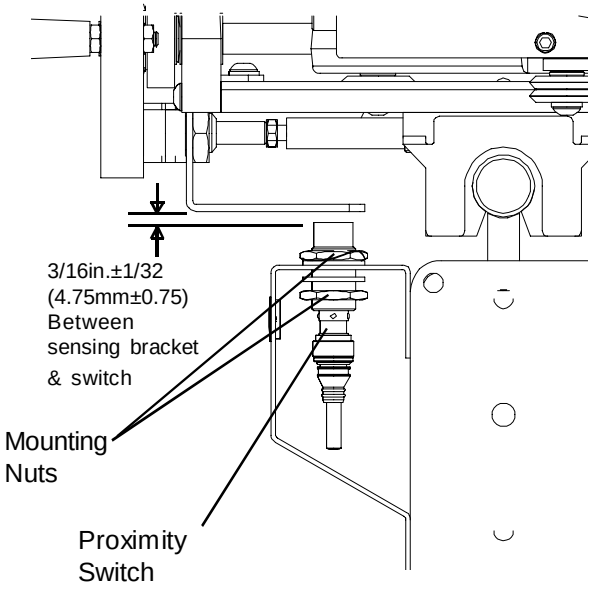

FIG. 18

ADJUSTING THE PRELOAD TENSION ON THE SMALL GRINDING HEAD SLIDE VEE ROLLERS

The small grinding head slide vee rollers are positioned two fixed on the left and one adjustable on the right side. To set the correct preload on the right side adjuster, tighten the setscrew in FIG. 19 until the spring is fully compressed solid, then back off 1/2 turn.

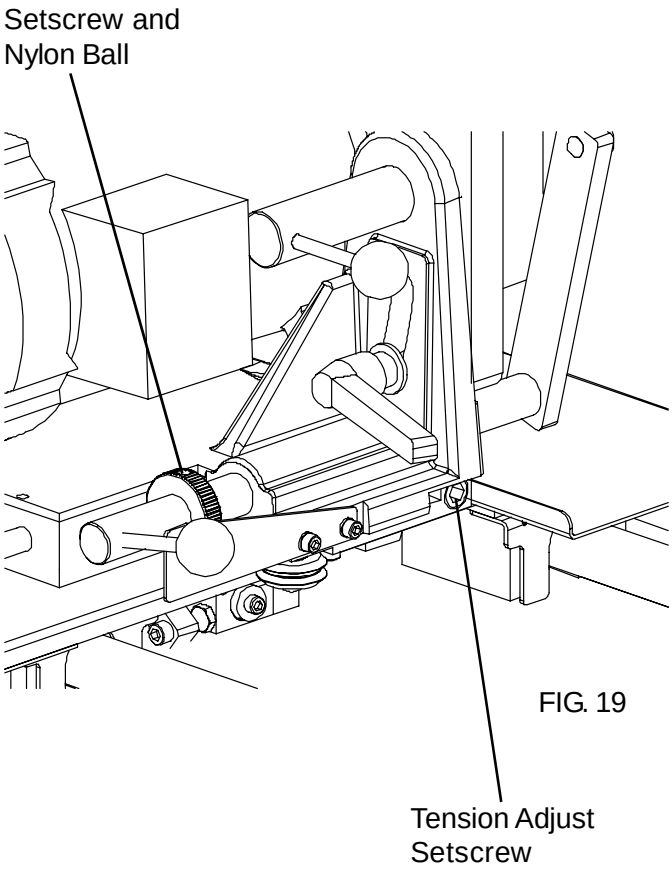

FIG. 19

TO ELIMINATE MOVEMENT IN THE DIAMOND DRESSER ADJUSTMENT COLLAR

The adjustment collar on the diamond dresser (See Fig. 19) has a nylon ball and setscrew to put a holding drag on the diamond dresser shaft. If the adjustment collar is moving when not wanted or moving too freely, tighten the setscrew (this will put more load on the nylon ball). If the adjustment collar is difficult to turn, loosen the setscrew decreasing the load on the nylon ball.

TO ELIMINATE INFEED HANDWHEEL BACKLASH

If there is backlash in the Grinder Head Infeed handwheel (FIG. 20), there are two adjustment points on each to check:

1. Washers behind the handwheel:

   A. Remove the setscrew holding the calibration ring to the handwheel.Go through the set screw hole and loosen the setscrew holding the handwheel to the shaft (about one-half turn).

   B. Tighten the hex lock nut which secures the handwheel to 100 in. lbs. [1.15 kg-m], then back off 1/2 turn.

   C. Check for .015 in. [.04mm] gap between the wave washer and the flat washer. See FIG. 21. Readjust the hex lock nut if necessary.

   D. Tighten the setscrew holding the handwheel to the shaft. Install and tighten the calibration ring setscrew.

2. Check the nylon ball tension on the adjustment shaft threads at the grinding head slide. See FIG.20. When you turn the handwheel there should be no free play in the handwheel before the grinding head slide moves. If there is free play, tighten the setscrew that pushes the nylon ball against the acme thread of the adjustment shaft. The nylon ball preloads the free play out of the threaded joint between the adjustment shaft and the tooling bar slide block. Apply tension only enough to zero the free play. DO NOT over tension as the adjuster will be difficult to turn.

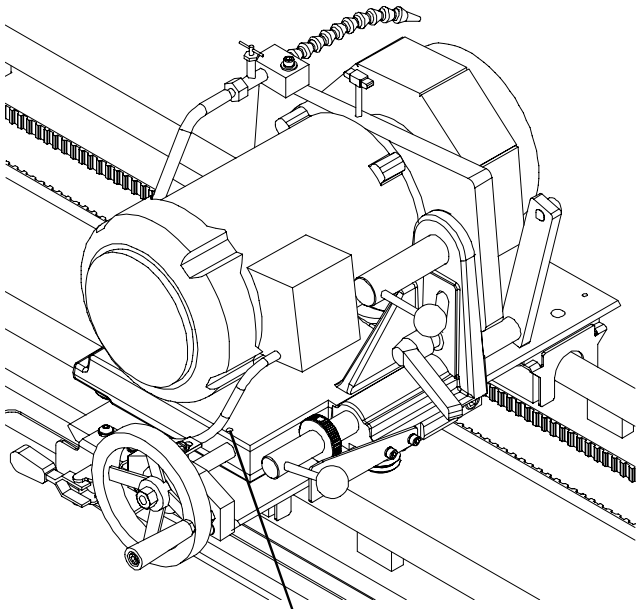

FIG. 20

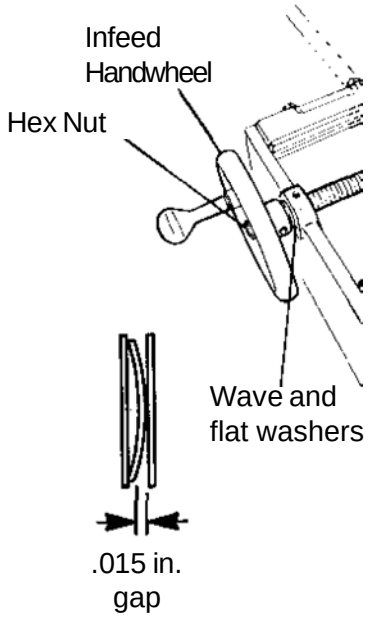

FIG. 21

TRAVERSE BELT TENSION

To adjust the tension on the traverse belt tighten the screws and nuts located at the right side of the traverse belt. Tighten nuts until the comprension springs measure 3/4". See FIG. 22. If the springs are not tensioned equally, uneven loading on the traverse system may cause parts to fail.

DO NOT OVERTIGHTEN. OVERTIGHTENING COULD DAMAGE THE BELT OR TRAVERSE DRIVE SYSTEM.

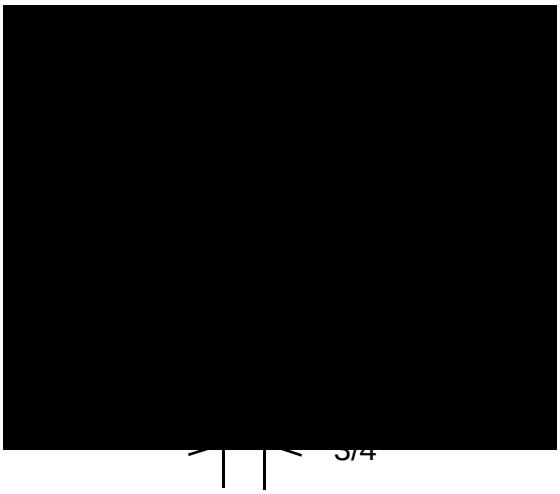

FIG. 22

TRAVERSE CLAMP FORCE

If the traverse clamp is slipping during regular operation it may be necessary to tighten the clamp. To tighten, loosen the jam nut and screw the tip out. Move the traverse belt out of the way and verify the clamped distance from the tip to the clamping block (shoe). See FIG. 23. Lock in place by tightening the jam nut against the clamp, being careful not to move the tip.

Do not set the adjustment at less than .10”. The .10” setting allows slippage in a jam situation and damage can occur if this adjustment is set to narrow.

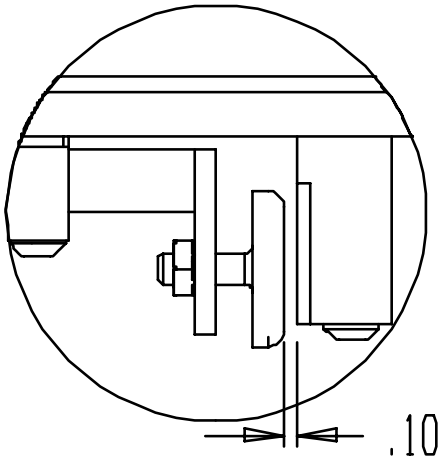

FIG. 23

CAUTION SHOULD BE USED AS ADJUSTING THE TIP WILL AFFECT THE SLIP LOAD AND COULD DAMAGE THE CLAMP TIP, BELT OR TRAVERSE DRIVE SYSTEM.

POTENTIOMETER ADJUSTMENTS TRAVERSE DRIVE CONTROL (TDC)

Min. Speed--Factory set at full (CCW) 8:30. Do not change this setting.

(Right Traverse) Forward Torque--Factory set at full (CW) 4:30. Do not change this setting.
(Left Traverse) Reverse Torque--Factory set at full (CW) 4:30. Do not change this setting.

IR COMP--Factory set to 9:00. IR COMP is current (I) resistance (R) compensation (COMP).
IR COMP adjusts the output voltage of the drive which balances load to motor RPM. Regulation of a traverse motor may be improved by slight adjustment of the IR COMP trim pot clockwise from its factory-set position. Overcompensation causes the motor to oscillate or to increase speed when fully loaded. If you reach such a point, turn the IR COMP trim pot counterclockwise until the symptoms disappear.

Max. Speed--Set at 3:30 for maximum voltage of 90 Volts DC to the traverse motor. When voltage is above 90 volts DC, the traverse motor will start to pulsate and not run smoothly.

(Right Traverse) Forward Acceleration--Factory set at full (CCW) 8:30. Do not change this setting.
(Left Traverse) Reverse Acceleration--Factory set at full (CCW) 8:30. Do not change this setting.

(DB) Dead Band is the potentiometer setting for the 50 or 60 Hz cycle control. Factory set to 9:00, works for both 50 and 60 Hz. Do not change this setting.

Calibrating the **DWELL TIME** rotary DIP switch adjusts the amount of time the process remains in the stop position after a limit switch is actuated. The **DWELL TIME** range is adjustable from 0 - 4 seconds. A DIP switch setting of 0 sets the **DWELL TIME** to 0 seconds, while a setting of 8 sets the **DWELL TIME** to 4 seconds. Dwell time is preset to #2 setting for a 1 second dwell time when reversing at each end of stroke.

Diagnostic LED's indicate the function that is currently being performed:

* **POWER indicates that ac power is being applied to the control.**
* **FORWARD indicates that the process is running in the forward direction (traversing left).**
* **REVERSE indicates that the process is running in the reverse direction (traversing right).**
* **PROX 1 FWD LIMIT lights when the forward limit switch is actuated (left prox).**
* **PROX 2 REV LIMIT lights when the reverse limit switch is actuated (right prox).**

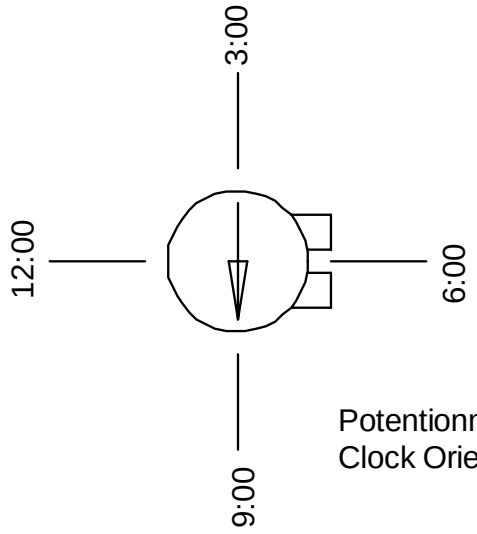

Potentionmeter
Clock Orientation

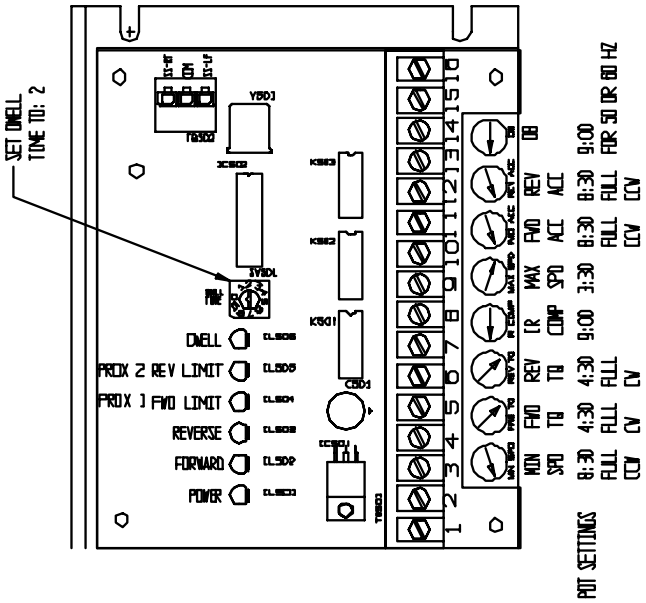

CONTROL BOX

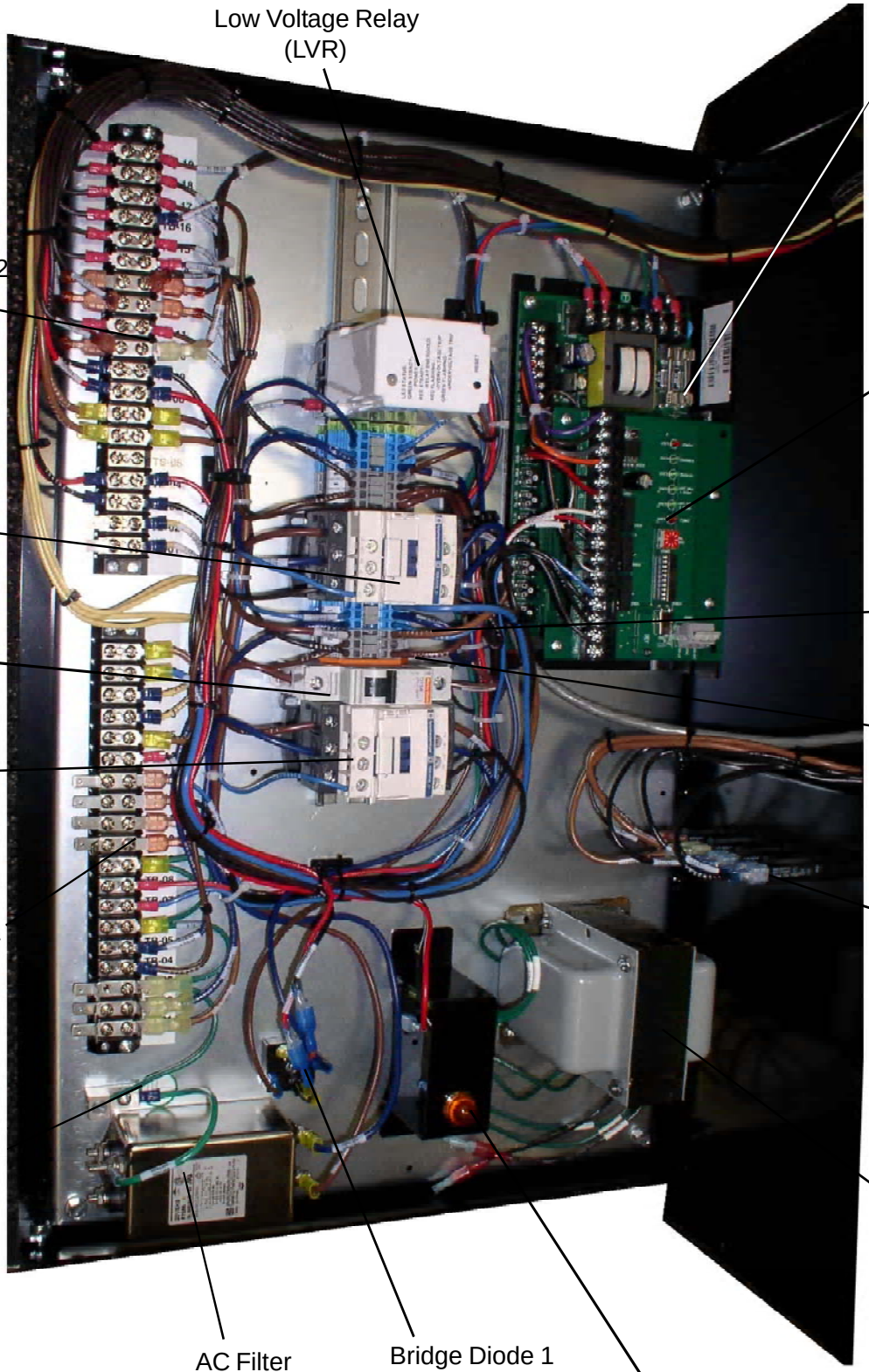
Low Voltage Relay (LVR)
Traverse Board 3-amp slow-blo fuse.
Terminal Strip #2 (TB2)
Traverse Drive Control Board (TDC)
Magnetic Contactor (MAG)
Blue Terminal Blocks (TBW) or (TBB)
Main Circuit Breaker (MCB)
Grey Terminal Blocks (TBG)
Grinding Motor Relay (REL)
Circuit Breakers (CB1-CB4)
Termial Strip #1 (TB1)
Main Ground Lug
Transformer for Magnets (TF1)
AC Filter (FTR)
Bridge Diode 1 (BD1)
Power Light for Magnets (LGT)

SKILL AND TRAINING REQUIRED FOR ELECTRICAL SERVICING

This Electrical Troubleshooting section is designed for technicians who have the necessary electrical knowledge and skills to reliably test and repair the electrical system. For those without that background, service can be arranged through your local distributor.

This manual presumes that you are already familiar with the normal operation of the Grinder. If not, you should read the operators section, or do the servicing in conjunction with someone who is familiar with its operation.

Persons without the necessary knowledge and skills should not remove the control box cover or attempt any internal troubleshooting, adjustments, or parts replacement.

If you have any question not answered in this manual, please call your distributor. They will contact the manufacturer if necessary.

WIRE LABELS

All wires have a wire label at each end for troubleshooting. The wire label has a code which tells you wiring information. The wire label has a seven or eight position code. The first two or three digits are the wire number: 01-99 or 123. The next three numbers or letters are the code for the component to which the wire attaches. Example: GMC for Grind Motor Control. The last two numbers or letters are the number of the terminal on the component to which the wire attaches.

ELECTRICAL TROUBLESHOOTING INDEX

***PROBLEM*--AC Main Power Controls: no electrical power to control panel.**

Verify all wires shown on the wiring diagram on pages 54-55 are correct and pull on wire terminals with approximately 3 lbs force to verify there are no loose terminal connections and/ or no loose crimps between wire and terminal. If problem persists, test as listed below.

Possible Cause	***Checkout Procedure***	
Emergency Stop Botton(ESS) is Depressed	**A.** Pull Up on ESS Button	Machine works Yes--end troubleshooting No--go to Step **B.** next
You must push the System Start Switch (SSS) to get power to control Panel	**B.** Listen for the Magnetic Starter (MAG) contacts to pull in with a clunk	Machine works Yes--end troubleshooting No--go to step **C.** next.
Main Power Cord is not plugged in	**C.** Plug in main power cord	Machine works Yes--end troubleshooting No--go to step **D.** next.
ALL Switches **MUST** be turned **OFF** for contactor to pull in.	**D.** Tturn off all switches.	Machine works Yes--end troubleshooting No--go to step **E.** next.
Main 15 amp outlet circuit breaker has tripped	**E.** Check circuit breaker in your building and reset if necessary. (Check wall outlet with a light to make sure it works)	Machine works Yes--end troubleshooting No--but light works in outlet--go to Step **F.** next. No--but light does not work in outlet. You must solve your power delivery problem independent of machine.
No 120 Volts AC power to Filter (FTR)	**F.** Check for 120V at Cord into FTR (Power Cord #32)	FTR "Line" Terminals for 120 Volts AC wires labled 32FTRBL to 32FTRWH Yes--Go to Step **G**. next. No--Replace Power Cord- 6059054
No 120 Volts AC power out of Filter	**G.** Check for 120V out of FTR	FTR "Load" Terminals for 120 Volts AC wires labled 01FTRBR to 02FTRBU Yes--Go to Step **H**. next. No--Replace Filter
No 120 Volts AC power to Main Circuit Breaker (MCB)	**H.** Check for 120V to MCB	MCB (01MCB--) to nuetral (blue) terminal out of FTR for 120VAC Yes--Go to Step **I**. next. No--Check wires & replace if needed.
No 120 Volts AC power from Main Circuit Breaker (MCB)	**I.** Check for 120V to MCB	MCB (03MCB--) to nuetral (blue) terminal out of FTR for 120 VAC Yes--Go to Step **J**. next. No--Flip Switch on MCB to "ON" - Machine works-- end trouble shooting Machine does not work-- replace MCB

ELECTRICAL TROUBLESHOOTING (Continued)

Possible Causes	***Checkout Procedure***	
120 Volts AC power not delivered to Terminal Strip	**J.** Check for 120 Volts AC at terminal strip.	Terminal "11" on Terminal Strip 2 "07TB2-11" to nuetral (blue) terminal out of FTR for 120 VAC Yes--Go to Step **K**. next. No--Check wires #7 & #3, Check Jumper on Terminal Blocks 1-3.
Grinding Motor Switch (GMS) not working	**K.** Check for 120 Volts AC at GMS Terminals 1	Measure 120 volts AC from GMS Terminal 1 to FTR terminal (Blue) Yes--Go to Step **M**. next. No--Flip Switch and check again- Works--Switch is upside down. Does not work-- Check wiring/ Verify Continuity/ Replace Switch
Bad Emergency Stop Switch (ESS)	**M.** Check voltage after the (ESS) MAKE SURE SWITCH IS PULLED UP!	Measure 120 Volts AC from (ESS) term 2 to FTR terminal (Blue) Yes--Go to Step **N.** next No--Check wire for continuity, then verify switch continuity. If bad replace ESS contactor (NC)
Bad System Start Switch (SSS)	**N.** Hold in SSS and Check voltage after the (SSS)	Measure 120 Volts AC from (SSS) term 3 to FTR terminal (Blue) Yes--Go to Step **O.** next No--Check wire for continuity, then verify switch continuity. If bad replace SSS contactor (NO)
Low Voltage Relay (REL) not operating	**O.** Hold in SSS and Check voltage at LVR. LVR must be installed in 8-pin socket.	Measure 120 Volts AC from LVR term 8 to FTR terminal (Blue) Yes--Go to Step **P.** next No--Check for 120 Volts AC from LVR term 6 to term 7. Yes--Verify Continuity of term 1 to term 8 on LVR. Replace LVR if bad. No--Verify Continuity of Wires.
Bad Main Contactor (MAG)	**P.** Hold in SSS and Check voltage at MAG A1 & A2.	Measure 120 Volts AC from MAG Term A1 to Term A2 Yes--MAG Should pull in with clunck, if not replace MAG. No--Verify Continuity of Wires.

***PROBLEM*--Machine Shuts off when you turn on Grind motor switch.**

Possible Cause	***Checkout Procedure***	
Guard Door is open.	**A.** Close the guard doors.	Machine works Yes--end troubleshooting No--go to Step **B.** next
Low Voltage Relay is tripping.	**B.** Power delivered to the grinder is inadequate. Verify that adequate power is delivered to the grinder. See page 4 of the manual. Fix the problem with building power.	Machine works Yes--end troubleshooting No--go to Step **C.** next
Door Safety Switch is not aligned	**C.** Check Alignment of Door Safety Switch on guard door.	Check aligment of door switch. Yes--end troubleshooting No--Go to Step **D**. next.
Door Safety Switch is not working properly.	**D.** Verify Door Swith is Working properly.	Disconnect door safety switch cord at terminal 14 and 15 on Terminal Strip 1. Verify Conituity of switch with door closed. Yes--Reconnect Terminals and verify continuity of wires. No--Verify continuity of cord and replace cord or switch.

***PROBLEM*--(MAG) turns on only with System Start Switch held in.**

Possible Cause	***Checkout Procedure***	
No Power to MAG holding Contact	**A.** Check voltage to MAG holding contact in.	Measure 120 Volts AC at MAG term T3 to FTR terminal (Blue) with E-Stop Pulled out. (do NOT press start button while checking.) Yes--Go to Step **D**. next. No--Verify continuity of wiring to MAG T3.
MAG holding contact has failed	**B.** Verify the magnetic starter (MAG) holding contact is working.	Disconnect Wire to MAG L3 and Measure 120 Volts AC from MAG term L3 to FTR Terminal (Blue). Press and hold Green Start button to hold in MAG contacts while checking. Yes--Verify continuity of wiring from MAG L3 No--Replace MAG.

***PROBLEM*-- Grinding motor not working.**

Assuming (SSS) System Start Switch is on with 120 volts AC to control panel and all other functions are working.

Verify all wires shown on the wiring diagram on pages 54-55 are correct and pull on wire terminals with approximately 3lbs force to verify there are no loose terminal connections and/or no loose crimps between wire and terminal. If loose terminals are found, retighten and retest system. If problem persists, test as listed below.

Possible Cause	***Checkout Procedure***	
Grinding Motor Switch (GMS) is not on	**A.** Turn switch on	Grinding Motor works Yes--end troubleshooting No--go to Step **B.** next
Guard door is not closed	**B.** Close Front guard doors	Grinding Motor works Yes--end troubleshooting No--go to Step **C.** next
12 Amp Circuit Breaker (CB) is tripped	**C.** Check 12 amp CB on front of Control panel. Press in if tripped.	Grinding Motor works Yes--end troubleshooting No--go to Step **D.** next
Grind Motor Switch (GMS) not working	**D.** Check for power to GMS	GMS term 5 to FTR Terminal (Blue) for 120 Volts AC Yes--go to Step **E.** next No--With power off, check continuity of wires to GMS.
	E. Check for power from GMS	With GMS ON , check GMS Term 6 to FTR Terminal (Blue) for 120 Volts AC. Yes--Go to Step **F.** next No--replace GMS
Grinding Motor Relay not working	**F.** Check for power to relay Coil (Relay should click when GMS is turned on.)	Check for 120 Volts (AC) from A1 to A2 of Grinding motor Relay. Yes--If Relay does not pull in with click, replace Relay, if it does Go to Step **G.** next No-- check continuity of wires to Grinding motor Relay.
No Power to Relay Contacts	**G.** Verify Power to Relay Contacts	(REL) Term L1 to Term L2 for 120 Volts (AC) Yes--Go to Step **H.** next No--Check wires to REL Term L1 & L2

Possible Cause	***Checkout Procedure***	
Bad Contacts in Grinding motor Relay	**H.** Verify power out of Grinding Motor Relay. GMS in ON position.	With relay pulled in (click) check (REL) Term T1 to Term T2 for 120 Volts (AC) Yes--Go to Step **I.** next No--Replace Gringing Motor Relay
Bad Circuit Breaker	**I.** Verify Power out of Circuit Breaker.	Check for 120 Volts (AC) from terminals TB2-6 (terminal 6 on right terminal strip) to FTR Terminal (Blue Yes--Go to Step **J.** next No--Check circuit breaker for continuity. Verify wiring and replace if needed.
Bad Grinding Motor	**J.** Verify Power to Grinding motor Cord.	Verify wiring at terminals 1 & 2 on Terminal Strip 1 (left terminal strip). Check TB1-1 to TB1-2 for 120 VAC. Yes-- Check terminals on motor cord. If tight replace motor. No-- Check wires from Grinding Motor Relay and Circuit Breaker to Terminal Strip 1.

***PROBLEM*--Traverse Drive not working.**

Assuming (SSS) System Start Switch is on with 120 volts AC to control panel and all other functions are working.

Verify all wires shown on the wiring diagram on pages 54-55 are correct and pull on wire terminals with approximately 3lbs force to verify there are no loose terminal connections and/or no loose crimps between wire and terminal. If loose terminals are found, retighten and retest system. If problem persists, test as listed below.

Possible Cause	***Checkout Procedure***	
Traverse Motor Switch (TMS) is not on	**A.** Turn on (TMS)	Traverse works Yes--end troubleshooting No--got to Step **B.** next
Traverse Speed Pot (TSP) set to zero	**B.** Set (TSP) to 35 on the control panel	Traverse works Yes--end troubleshooting No--go to Step **C.** next
Fuse on Traverse Drive Control (TDC) has failed	**C.** Check fuse on the Traverse Drive Control Board (TDC) and replace if failed. See Page 23. Too heavy a grind causes grinding head traverse motor to overload and blow the fuse, NOTE: Fuse can not be checked visually. Use Ohm test to check fuse. Fuse must be replaced with a slo-blo fuse.	Traverse works Yes--end troubleshooting No--go to Step **D.** next See Page 23 for location of fuse on the Traverse Drive Control Board (TDC)
Traverse Drive Control (TDC) is bad	**D.** Check for 120 Volts (AC) incoming to (TDC)	On (TDC) Terminal L1 to L2 for 120 Volts AC Yes--Go to Step **F.** No--Go to Step **E.** next
Bad Traverse Motor Switch (TMS)	**E.** Check for 120 Volts AC at (TMS). (Make certain (TMS) is on)	Measure 120 volts AC from TMS Terminal 5 to FTR Terminal (Blue). Yes--Verify wiring to TDC. No--Flip Switch and check again- Works--Switch is upside down. Does not work-- Check wiring/Verify Continuity/ Replace Switch

Possible Cause	***Checkout Procedure***	
No DC Voltage from (TDC) Traverse Drive Control	**F.** Check for 90 Volts DC across (TDC) terminals #A1 to #A2 this voltage drives the DC traverse motor. NOTE: Traverse must be on and have (TSP) turned full CW to maximum voltage of 90 VDC	Check (TDC) terminals #A1 to #A2 for 90 Volts DC Yes--go to Step **G.** next No--go to Step **H.** next
Traverse Motor is bad	**G.** Check traverse motor continuity	Remove motor wires from Terminal Strip 1 terminals #7 & #8 check for 0 ohms across the black and white wires. Yes--end troubleshooting, motor should run, if not, replace motor. No--go to Step **K.** next
(TSP) is not working	**H.** Check (TSP) (10K) on control panel	(TDC) Pin #8 to #7 Pot Full CCW Pot Full CW 0 VDC 9.75 VDC Pin #8 to 9 Pot Full CCW Pot Full CW 9.75 VDC 0 VDC Yes--replace the (TDC) No--go to Step **J.** next
(TSP) (10K) is bad	**J.** Check (TSP) for 10,000 ohms. Remove three wires from (TDC) red from term #8 white from term #7 black from term #9	Check for 10,000 ohms red to white wires Full CCW--0 ohms Full CW--10,000 ohms Red to black wires Full CCW--10,000 ohms Full CW--0 ohms Yes--replace the (TDC) No--replace (TSP)
Worn motor brushes	**K.** Inspect Motor Brushes **DISCONNECT POWER FROM MACHINE**	Remove the brushes one at a time and maintain orientation for reinsertion. See if brush is worn short, 3/8" (10 mm) minimum length. Yes--replace motor brushes No--replace Traverse Motor **NOTE: TRAVERSE MOTOR BRUSHES HAVE SHOWN A VERY LONG LIFE. THEREFORE IT IS IMPROBABLE THAT MOTOR BRUSHES ARE BAD.**

***PROBLEM*--Traverse does not stop to reverse directions when flag goes under the proximity switch on the left side or right side of machine.**

Possible Cause	***Checkout Procedure***		
Gap between flag and prox is incorrect.	A. Gap between flag and prox should be 3/16 to 1/4" (4-6 mm). Prox LED does not light when flag is under prox.	If incorrect, adjust per adjustment section of manual. Yes--end troubleshooting No--go to Step B. next	
Proximity Switch is bad.	B. Proximity switch is not working properly or wire connections are loose.	First check to see if proximity light comes on. When the light is on, it means that there is electricity coming to proximity switch. Actuate prox switches with steel tool to take measurements.	The light coming on shows the proximity is getting electrical contact.
		Left proximity (PROX 1) check Traverse drive Control (TDC) between terminals #13 (black wire) and #15 (brown wire).	Proximity light on- 0 Volts DC Proximity light off- 12 Volts DC
		Right proximity (PROX) check #14 (black wire) and #15 (brown wire).	Proximity light on- 0 Volts DC Proximity light off- 12 Volts DC
			Replace proximity switch if the voltages do not read as above.

***PROBLEM*--Traverse speed control goes at one speed only.**

Possible Cause	***Checkout Procedure***	
Defective speed control potentiometer	**A.** Check potentiometer on control panel.	Traverse Drive Control Pin #8 to 7 Pot full CCW Pot Full CW 0 VDC 9.75 VDC Pin #8 to 9 Pot full CCW Pot Full CW 9.75 VDC 0 VDC Yes--Pot is OK No--Go to Step **B.** next
	B. Check potentiometer for 10,000 ohms. Remove three wires from Traverse Drive Control red from term #8 white from term #7 black from term #9	Check for 10,000 ohms Red to White wires Full CCW - 0 ohms Full CW - 10,000 ohms Red to Black wires Full CCW - 10,000 ohms Full CW - 0 ohms Yes--Go to Step **C.** next No--replace potentiometer. Wiper inside of potentiometer controls speed. Wiper may be bad and not making contact.
Wiring hookup to potentiometer is improper. (If components have been replaced.)	**C.** Check potentiometer wiring for proper hookup. See that speed pot is wired per electrical diagram	Wrong wire hookup effects traverse control. Reversing wires from the potentiometer will cause the the D C motor to run slower than designed or may not funtion clorrectly. Check for Proper function. Yes--end troubleshooting No--Go to Step **D.** next
Traverse Drive Control Board (TDC) dial pot settings not correct. (If board has not been replaced.)	**D.** Check all pot settings on Traverse Drive Control Board (TDC) as shown in wiring diagram. (See adjustment section Traverse Motor Control Board Settings.)	Minimum and maximum pot settings effect traverse speed.

***PROBLEM*--If the carriage traverses to one end of stroke or the other and it stops and does not reverse direction.**

Possible Cause	***Checkout Procedure***	
Proximity switch is not working properly or wire connections are loose	First check to see of proximity light comes on. When the light is on, it means that there is electricity coming to proximity switch. Actuate prox switches with steel tool to take measurements.	The light coming on shows the proximity is getting electrical contact.
	Left proximity (PROX1) check Traverse drive Control (TDC) between terminals #14 (black wire) and #15 (brown wire).	Proximity light on- 5 Volts DC Proximity light off- 14 Volts DC
	Right proximity (PROX) check (TDC) between terminals #13 (black wire) and #15 (brown wire).	Proximity light on- 5 Volts DC Proximity light off- 14 Volts DC
		Replace proximity switch if the voltages do not read as above.

***PROBLEM*--Insufficient hesitation at carriage stops prior to reversing traverse.**

The dwell time on the traverse drive control not set properly.	Reset dwell time as required. One increment increases Dwell time by 1/2 second.	

***PROBLEM*--Traverse changes directions erratically while running in traverse cycle.**

Loose wire to proximity switch.	Check wire connections from the proximity switches and tighten down screws.	A loose wire connection will give intermittent electrical contact.

***PROBLEM*--Electromagents do not function.**

Possible Cause	***Checkout Procedure***	
Elecromagnet switch (EMS) is not on.	**A**. Turn (EMS) switch to on position.	Electromagnets work Yes-- end troubleshooting No-- go to Step **B.** next
Uninteruptable Power Supply (UPS) is turned off	**B.** If the UPS is off, turn it on.	Electromagnets work Yes-- end troubleshooting No-- go to Step **C**. next
Circuit Breaker tripped	**C.** Check Circuit breaker on front of Control Panel. Press in if Tripped.	Electromagnets work Yes-- end troubleshooting No-- go to Step **D**. next
No Power out of UPS	**D.** Unplug male cord in back of UPS and plug in a light or other devices to check for power out of the UPS.	Light works in UPS. Yes-- Reconnect plug from control box and go to Step **F.** No-- Go to Step **E**. next
No Power to UPS	**E.** Check for 120 Volts (AC) to UPS	Check for 120 Volts (AC) from Terminal 18 (TB1-18) to Terminal 19 (TB1-19) on Terminal Strip 1 Yes-- Replace or fully charge the UPS and retest. No-- Check continuity of wires to Terminal 18 & 19.
Transformer not working	**F.** Check for 12VAC at input to Bridge Diode. NOTE: With 12 VAC at the bridge diode input, the light inside the control box should be ON. If not replace the bulbor wires.	Check for 12 Volt (AC) from Terminals 71BD2-S to 71BD2-S Yes-- Go to Step **G.** next No-- Check cord from UPS for 120 Volts (AC). Replace cord if bad or replace Transformer if cord is good.
Bridge Diode is not working	**G.** Check for 12 VDC out of the bridge diode at Terminal Strip 2.	Check for 12 Volts (DC) from Terminals 146TB2-4 to 145TB2-3 on Terminal Strip 2. Yes-- Go to Step **H**. next No-- Check Continuity of wires, replace Bridge Diode or wires.
Circuit Breaker is Bad	**H.** Check for 12 VDC into Elecromagnet switch (EMS)	Check for 12 Volts (DC) from Terminals 162EMS-5 to 153EMS-2 Yes-- Go to Step **I.** next No-- Check continuity of wires and Circuit breaker. Repace if bad.
Electromagnet Switch is Bad	**I.** With EMS on, Check for 12 VDC out of EMS Switch at Terminal Strip 2. NOTE: With 12 VDC at electromagnet switch terminals 166EMS-6 and 165EMS-3 the light above the switch on the ouside of the panel should be ON. If not, replace the bulb or wires.	Check for 12 Volts (DC) from Terminals 1 (171TB2-1) to 2 (171TB2-1) on Terminal Strip 2. Yes-- Call Factory Customer Service for assistance. No-- Check Continuity of wires and EMS, replace bad part.

***PROBLEM*--Tooling Bar Rotation Actuator does not Function**

Possible Cause	***Checkout Procedure***	
Actuator Motor Switch (AMS) is not on.	**A**. Push (AMS) switch to the up or Down position.	Actuator works Yes-- end troubleshooting No-- go to Step **B.** next
Circuit Breaker tripped	**B.** Check Circuit breaker on front of Control Panel. Press in if Tripped.	Actuator works Yes-- end troubleshooting No-- go to Step **C**. next
No Power to Bridge Diode	**C.** Check for 120 VAC at input to Bridge Diode.	Check for 120 Volt (AC) from Terminals 149BD1 to 150BD1 Yes-- Go to Step **D.** next No-- Verify continuity of wires
Bridge Diode is not working	**D.** Check for 120 V **DC** at the output of the bridge diode.	Check for 12 Volts **(DC)** from Terminals 152BD1-- to 151BD1 + Yes-- Go to Step **E.** next No-- Replace Bridge Diode
Bad Thermister	**E.** Check for 120 V **DC** at Terminal Strip 2.	Check for 120 Volts **(DC)** from Terminals 151TB2-8 to 152TB2-9 Yes-- Go to Step **F**. next No-- Check Continuity of wires, replace Thermister 3707644 if bad.
Circuit Breaker is Bad	**F.** Check for 120 V **DC** into Actuator Motor Switch (AMS)	Check for 120 Volts **(DC)** from Terminals 161AMS-4 to 163AMS-1 Yes-- Go to Step **G.** next No-- Check continuity of wires and Circuit breaker. Repace if bad.
Actuator Motor Switch (AMS) is Bad	**G.** While pressing switch (AMS) up or down, measue 120 Volts **(DC)** at Terminal Strip 1	Check for 120 Volts **(DC)** from Terminals 16 (TB1-16) to 17 (TB1-17) on Terminal Strip 1. Yes-- Go to Step **H.** next No-- Check Continuity of wires and AMS, replace switch.
Bad Actuator Cord or Motor	**H.** While pressing switch (AMS) up or down, measue 120 Volts **(DC)** at end of Actuator Cord where it connects to the motor.	Check for 120 Volts **(DC)** from Terminals169ACT-B to 169ACT-O Yes-- Replace Actuator assembly No-- Replace Actuator cord 6709210.

***PROBLEM*-- Coolant Pump not working.**

Assuming (SSS) System Start Switch is on with 120 volts AC to control panel and all other functions are working.

Verify all wires shown on the wiring diagram on pages 54-55 are correct and pull on wire terminals with approximately 3lbs force to verify there are no loose terminal connections and/or no loose crimps between wire and terminal. If loose terminals are found, retighten and retest system. If problem persists, test as listed below.

Possible Cause	***Checkout Procedure***	
Coolant Pump Switch (CPS) is not on.	**A.** Turn switch	Coolant Pump works Yes--end troubleshooting No--go to Step **B.** next
Coolant flow valve closed.	**B.** Open coolant flow valve.	Coolant Pump works Yes--end troubleshooting No--go to Step **C.** next
2 Amp Circuit Breaker (CB) is tripped	**C.** Check 2 amp CB on front of Control panel. Press in if tripped.	Coolant Pump works Yes--end troubleshooting No--go to Step **D.** next
2 Amp Circuit Breaker (CB) failed	**D.** Check power from CB	Measure 120 volt AC from both sides of 2 amp CB to FTR Terminal (Blue) Yes--go to Step **E.** next No--With power off, check continuity of CB & wires to CB. Replace CB or wires.
Coolant Pump Switch (CPS) not working	**E.** Check for power from CPS	CPS Term 5 to FTR Terminal (Blue) for 120 Volts AC Yes--Go to Step **F.** next No--replace CPS
Coolant Pump Not Working	**F.** Check for power from CPS	Measure 120 volt AC from TB1-4 to TB1-5. Yes--Replace Coolant Pump.

MECHANICAL TROUBLESHOOTING

--PROBLEM--	--POSSIBLE CAUSE--	--REMEDY--	--REASON--
Top face of bedknife is ground in a convex shape (high in the center) or concave shape (low in the center)	**A--**Grinding wheel is loading up with grinding grit.	Dress the wheel as prescribed in the Operators Manual.	A loaded wheel creates undue pressure on the surface being ground.
	B--Too heavy a grind on the final grinding pass.	Follow the procedures in the Operators Manual. On the final pass, infeed only about .001" [.025 mm]. Let the wheel spark out for 10-20 passes at about slow speed, with no additional infeed.	For precise grinding, sparking-out process is critical. It eliminates excessive final-grinding pressure which helps maintain grinding straightness.
	C--Small Grinding Head Slide Vee Roller loose	Adjust Vee Rollers per procedure on Page 34.	Looseness in roller causes erratic grind.
The top face of the bedknife is ground unevenly across the width.	**A--**Grinding wheel rim is not completely over the top face being ground.	The wheel rim must extend over the bedknife top face by 1/2" [13 mm] whenever possible. See Operators Manual. If not possible, dress the wheel more often.	When the rim doesn't extend over the top face, it wears unevenly and causes grooves across the bedknife.
	B--Small grinding Head Slide Vee Roller loose.	Adjust Vee rollers per procedure on Page 34.	Looseness in rollers causes erratic grind.
	C--Backlash in infeed handwheel.	Eliminate backlash in infeed handwheel, see Page 31.	Backlash allows grinding wheel to move under load.
Too coarse a grind on bedknife.	Grinding head is traversing too fast.	Slow down the traversing speed.	Traversing speed controls the grinding surface texture. A slower traverse produces grind marks closer together.
The top face of the bedknife shows burn marks from being too hot.	**A--**Coolant not directed onto the bedknife and grinding wheel.	Direct coolant into the bedknife, at the point of the grind. See Operators Manual.	When the front face of the bedknife gets too hot, the steel loses its temper (softens).
	B--Too heavy stock removal during grinding.	Take off about .002 to .003" [.05 to .075mm] per pass during rough grind. See Operators Manual.	Too much stock removal in one pass creates too much heat and softens the steel.
	C--Grinding wheel is glazing.	Dress the wheel before the finish-grinding pass on each bedknife. See Operators Manual.	Wheel will glaze if not dressed often enough. Also, as a general rule, use a higher traverse speed for the heavy grind.

MECHANICAL TROUBLESHOOTING (Continued)

--PROBLEM--	--POSSIBLE CAUSE--	--REMEDY--	--REASON--
Grinding wheel is glazing too quickly.	**A--**Wheel needs dressing.	Dress the wheel before the finish-grinding pass on each bedknife. See Operators Manual.	Wheel will glaze if not dressed often enough. If grinding wheel is not extended 1/2" [12 mm] over bedknife, it will glaze more quickly because there is less dressing.
	B--Too light a cut when rough grinding.	Take off about .002 to .003" [.05 to .075 mm] per pass during rough grind. See Operators Manual.	Too light a grinding cut doesn't permit enough dressing action on the wheel, so it glazes.
	C--Grinding head is traversing too slow.	Speed up traverse.	Too slow a traverse speed can cause excessive heat buildup in the grinding wheel, which glazes the wheel.
Grinding motor vibrates excessively.	Grinding wheel is out of balance.	Visually check the outside diameter runout while slowly rotating the wheel by hand. Also check the motor without a wheel installed. Replace the wheel if out-of -round. Minor imbalance between grinding wheel and motor armature can sometimes be corrected by rotating the wheel position on the motor shaft in 90° increments. This is called clocking the wheel. If you have vibration, try clocking the wheel 3 times. If this does not correct the problem, relace the wheel.	A grinding wheel which isn't properly trued up on outside or inside diameters can vibrate excessively and transfer that vibration to the motor.
Carriage traversing varies speed while grinding	**A--**Linear bearings in the carriage do not rotate freely	Adjust bearing for proper tension. See adjustments section of this manual.	When bearing preload is too tight, it causes excessive loading to drive carriage.
		Flush linear bearing per lubrication proceedure and replace wipers. Or replace three linear bearings and wipers.	Grinding grit is getting into the linear bearings and causing excessive driving torque of the carriage.
	B--Belt it slipping.	Adjust belt clamping force. See adjustment section of manual.	If the traverse belt clamp is damaged or not adjusted properly the belt will slip.
	C--Traverse belt tension is too loose.	Adjust traverse belt tension. See adjustments section of this manual.	If the belt is too loose it will tend to vibrate or the belt tensioning springs may tend to jump when loaded.

6709561 MAIN BASE ASSEMBLY

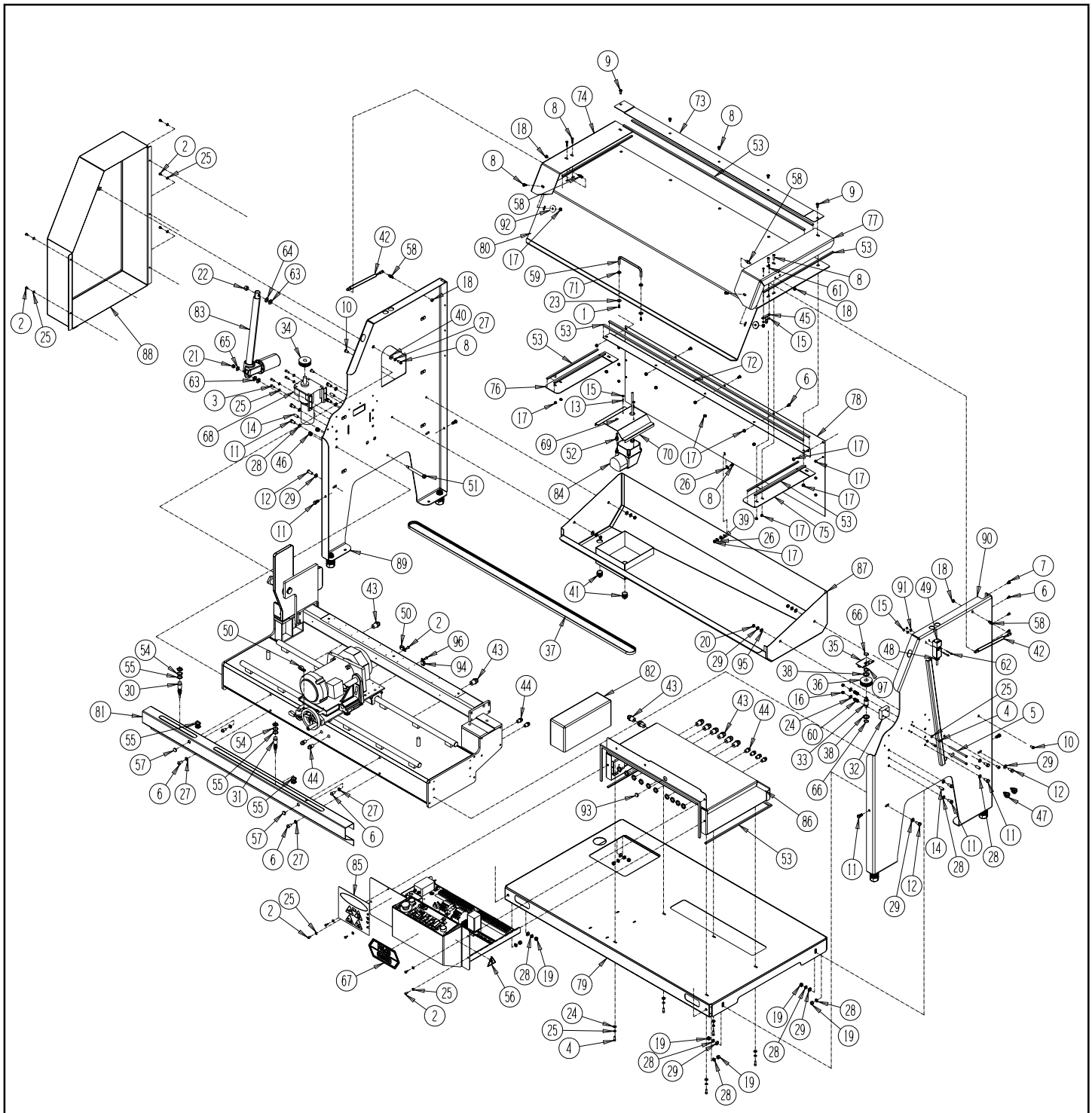

DIA. NO.	PART NO.	DESCRIPTION
1	B190834	Button Head Cap Screw 10-32 x 1/2
2	B250816	Button Head Cap Screw 1/4-20 x 1/2
3	B251011	Socket Head Cap Screw 1/4-20 x 5/8
4	B251211	Socket Head Cap Screw 1/4-20 x 3/4
5	**B256411**	**Socket Head Cap Screw 1/4-20 x 4**
6	B310813	Button Head Cap Screw 5/16-18 x 1/2
7	B311013	Button Head Cap Screw 5/16-18 x 5/8
8	B311213	Button Head Cap Screw 5/16-18 x 3/4
9	B311613	Button Head Cap Screw 5/16-18 x 1
10	**B371001**	**Hex Head Cap Screw 3/8-16 x 5/8**
11	B371201	Hex Head Cap Screw 3/8-16 x 3/4
12	B371601	Hex Head Cap Screw 3/8-16 x 3/4
13	C161020	Cup Point Socket Head Set Screw 8-32 x 5/8
14	H371602	Roll Pin .375D x 1.00LG
15	**J167000**	**Nylon Locknut Jam 8-32**
16	J257000	Nylon Locknut Jam 1/4-20
17	J317000	Nylon Locknut Jam 5/16-18
18	J317100	Nylon Locknut 5/16-18
19	J371000	Hex Nut 3/8-16
20	**J377000**	**Nylon Locknut Jam 3/8-16**
21	J377100	Nylon Locknut 3/8-16
22	J507000	Nylon Locknut Jam 1/2-13
23	K190101	Flat Washer #10
24	K250001	Flat Washer 1/4
25	**K251501**	**Split Lockwasher 1/4**
26	K310001	Flat Washer 5/16
27	K311501	Split Lockwasher 5/16
28	K371501	Split Lockwasher 3/8
29	K370001	Flat Washer 3/8
30	**27168**	**Traverse Proximity Switch Cord Left (Cord Only)**
	3707601	**Proximity Switch (Head only)**
31	27149	Traverse Proximity Switch Cord Rigth (Cord Only)
	3707601	Proximity Switch (Head only)
32	28192	Traverse Belt Pulley Support Block
33	50309	Traverse Ider Pulley Shaft
34	50354	Cog Drive Pulley
35	**50363**	**Traverse Pulley Guard**
36	55553	Idler Pulley Assembly
37	80354	Cog Belt
38	80355	Thrust Washer 1.25 OD x .75 ID
39	3389038	Rubber Washer .75 OD x .31 ID
40	**3529041**	**Flat Washer .88 OD x .33 ID**
41	3706022	Pipe Plug 3/4 NPTF
42	3706023	Gas Spring
43	3707009	Strain Relief Liquid Tight .27-.47 Dia. Wire
44	3707029	Strain Relief Liquid Tight .19-.30 Dia. Wire
45	**3707132**	**Door Safety Switch Key**
46	3707273	Strain Relief .33-.36 Dia. Wire
47	3707275	Strain Relief .37-.43 Dia. Wire
48	3707563	Strain Relief Liquid Tight .27-.46 Dia. Wire
49	3707728	Door Safety Switch
50	**3708121**	**Double Cord Clamp**
51	3708330	Shoulder Bolt 1/2 Diamer x 4" Long
52	3708339	Male Barb Connector
53	3708378	1/4 Thick Foam Strip
54	3708419	Wave Spring

6709561 MAIN BASE ASSEMBLY

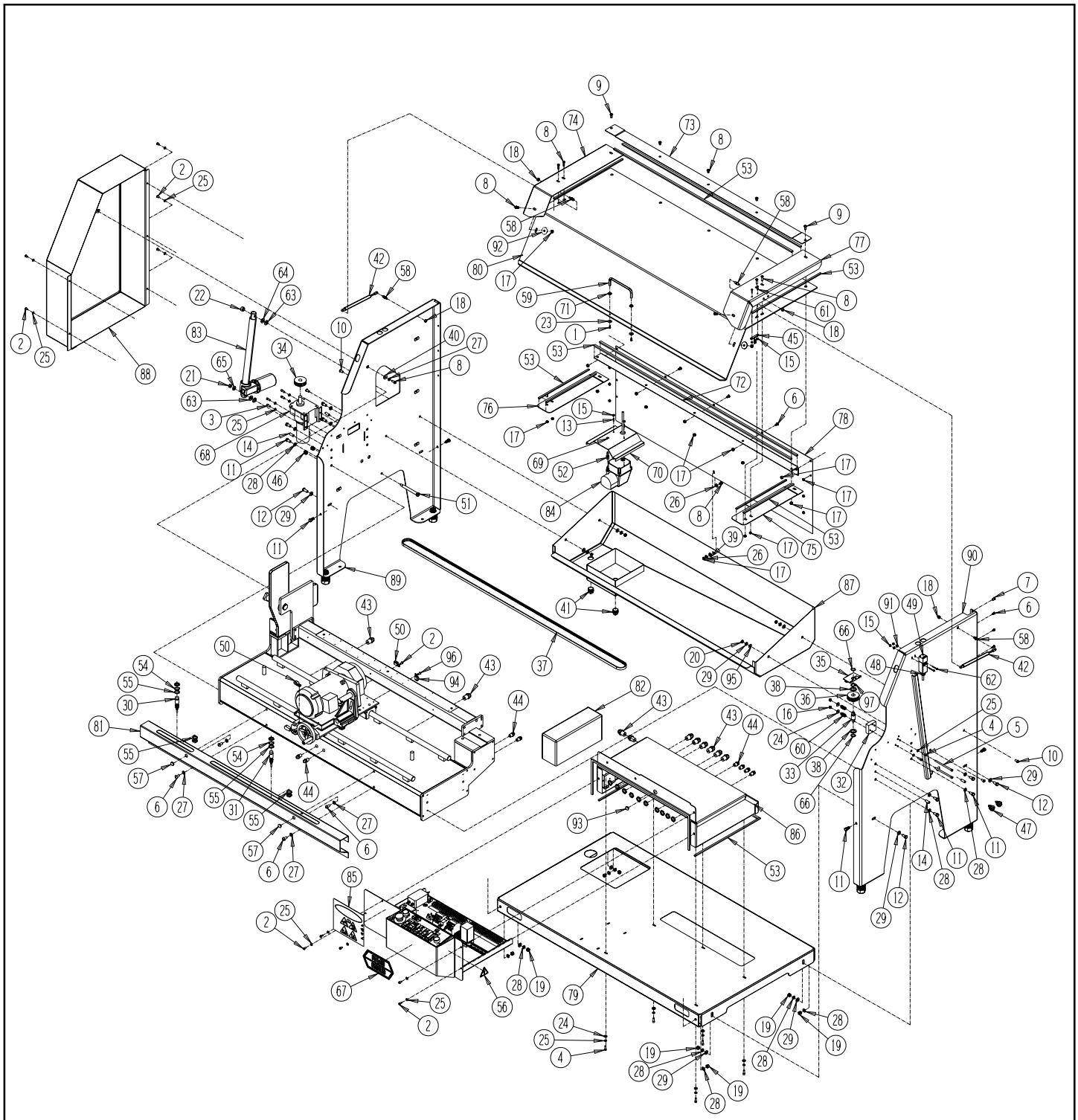

DIA. NO.	PART NO.	DESCRIPTION
55	**3708421**	**Flat Washer 1.0 OD x .75 ID**
56	3708448	Electrical Warning Decal
57	3707597	Hole Plug 5/8 Dia.
58	3708572	Ball Stud - 10MM
59	3708577	Handle
60	**3708658**	**Compression Srping**
61	3708820	Button Head Safety Screw 8-32 x 3/4
62	3708865	Button Head Safety Screw 8-32 x 3/4
63	3709016	Thrust Washer .93 OD x .50 ID
64	3709027	Thrust Washer .92 OD x .51 ID
65	**3709304**	**Thrust Wahser .81 OD x .38 ID**
66	3709331	Retaining Ring
67	3709990	Foley United Decal
68	6059062	Traverse Motor Assembly
69	6729003	Coolant Tube 1/4" ID x 60" Long
70	**6609046**	**Collant Pump Cover**
71	6709071	Handle Ferrule
72	6709117	Hinge
73	6709129	Door Plate
74	6729005	Door Spring Bracket Left
75	**6709132**	**Door Spring Plate Right**
76	6709133	Door Spring Plate Left
77	6729006	Door Spring Bracket Right (w/ Safety Switch Holes)
78	6709186	Upper Tank Back Panel
79	6709197	Lower Frame Panel
80	**6709198**	**Polycarbonate Door Formed**
81	6709199	Proximity Switch Panel
82	6709207	UPS Battery Assembly
83	6709208	Actuator Assembly -90 VDC
84	6709209	Coolant Pump Assembly
85	**6709214**	**Safety Symbol Decal**
86	6709568	Electrical Box Weldment
87	6709569	Coolant Tank Weldment
88	6709573	Actuator Cover Weldment
89	6709587	Side Frame Weldment Left
90	**6709589**	**Side Frame Weldment Right**
91	k160001	#8 Flat Washer
92	3589091	Flat Washer .343 x 1.38 x .13
93	3707595	7/8 Dia. Hole Plug
94	3707933	Cord Clamp
95	6009125	Rubber Washer .34 x .88 x .06
96	80141	#10 Self Tapping Screw
97	3708419	Wave Spring .78 ID x 1.00 OD

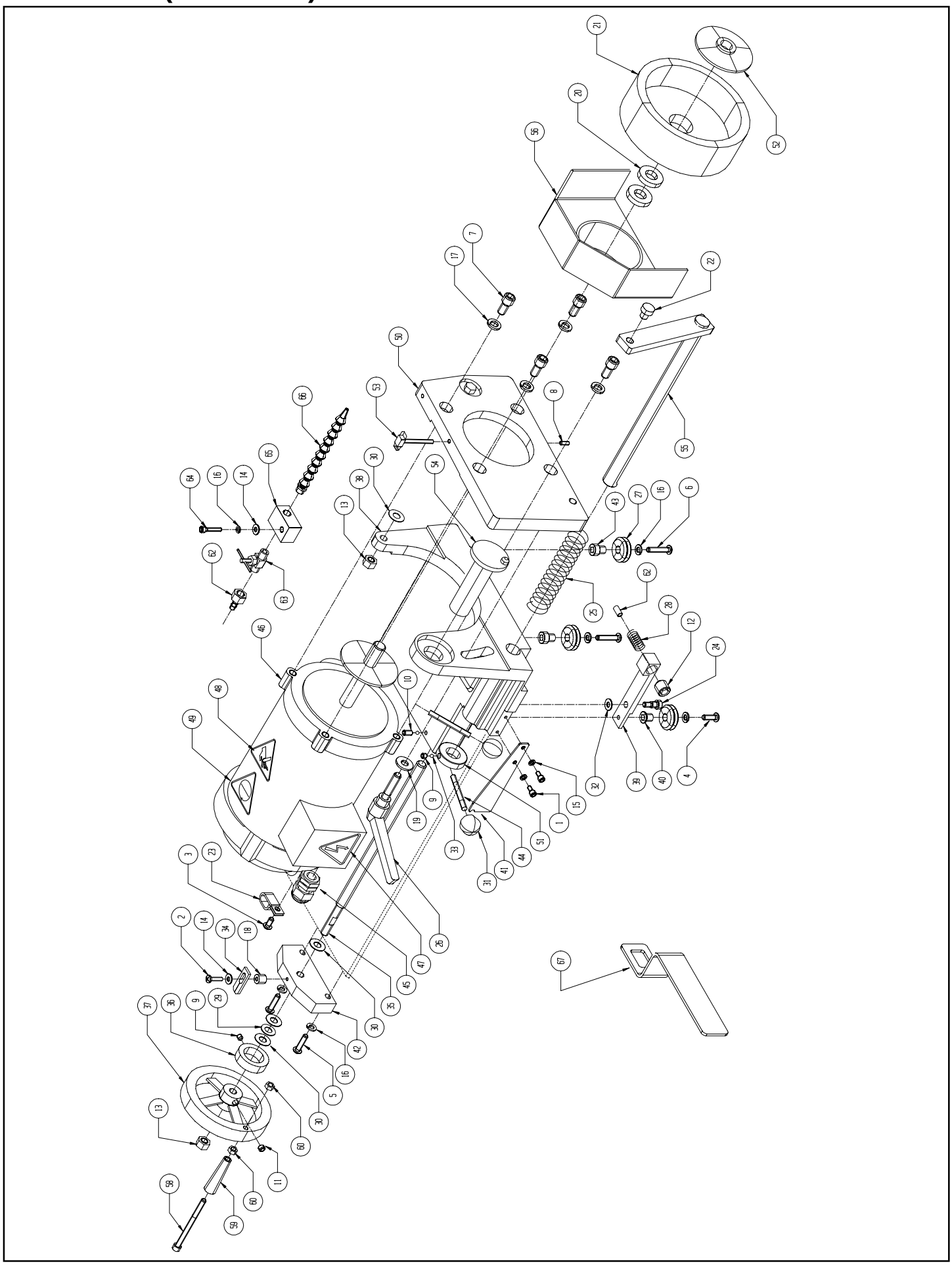
21
20
56
52
7
17
22
50
53
8
55
66
30
54
65
38
64
16
14
13
43
27
16
6
62
63
62
25
28
12
46
24
10
48
49
4
40
39
32
15
1
51
9
19
44
41
33
31
3
23
2
14
34
18
26
47
45
35
67
37
36
9
29
30
42
16
5
30
13
60
11
58
60
59

DIAGRAM NUMBER	PART NUMBER	PART DESCRIPTION
1	B190611	10 - 24 x 3/8 Socket Head Cap Screw
2	B191213	10 - 24 x 3/4 Button Head Socket Cap Screw
3	B250816	1/4 -20 x 1/2 Button Head Socket Cap Screw
4	B251216	1/4 - 20 x 3/4 Button Head Socket Cap Screw
5	**B251616**	**1/4 - 20 x 1 Button Head Socket Cap Screw**
6	B252016	1/4 - 20 x 1 - 1/4 Button Head Socket Cap Screw
7	B371211	3/8 - 16 x 3/4 Socket Head Cap Screw
8	C190820	10 - 24 x 1/2 Socket Set Screw
9	C250420	1/4 - 20 x 1/4 Socket Set Screw
10	**C250820**	**1/4 - 20 x 1/2 Socket Set Screw**
11	C310420	5/16 - 18 x 1/4 Socket Set Screw
12	C621060	5/8 - 18 x 5/8 Socket Set Screw
13	J377000	3/8 - 16 Locknut Jam Nylon
14	K190001	No. 10 Flat Washer
15	**K191501**	**No. 10 Lockwasher Split**
16	K251501	1/4 Lockwasher Split
17	K371501	3/8 Lockwasher Split
18	3589081	Spacer
19	K310101	5/16 Flat Cut Washer
20	**3700409**	**Bushing - Reducer**
21	3700411	Grinding Wheel Straight Cup 6" dia x 2" deep
22	3702086	Diamond Dresser
23	3708121	Clamp - Double Tube
24	3708543	Shoulder Bolt
25	**3708553**	**Spring Compression**
26	3708561	Adjustable Handle
27	3708657	Roller Dual Vee
28	3708658	Spring Compression
29	3709062	Washer Conical
30	**3709304**	**Washer - Thrust**
31	3709526	Knob
32	3708103	Washer Conical
33	3709705	Nylon Ball
34	3809047	Indicator Clear

DIAGRAM NUMBER	PART NUMBER	PART DESCRIPTION
35	**6009023**	**Shaft Adjusting**
36	6059082	Ring Calibrated
37	6009044	Handwheel
38	6609004	Base Carriage Slide
39	6609027	Arm - Roller Pivot
40	**6609028**	**Bushing-V Roller Short**
41	6609029	Bracket - Dresser Lock
42	6609030	Guide - Feed Screw
43	6609058	Bushing-V Roller Long
44	6709035	Stud
45	**3707009**	**Strain Relief**
46	6609502	Motor Assy 3/4 HP
47	3708448	Decal Warning Electrical
48	3708458	Decal Warning Sharp
49	3708461	Decal Warning 3600 RPM
50	**6609505**	**Motor Pivot Assy**
51	6709038	Collar - Adjuster
52	6709103	Flange - Outer
53	6709501	Tee Knob Assy
54	6709503	Eccentric Pin Assy
55	**6709509**	**Dresser Arm Weldment**
56	6709552	Grinding Wheel Guard Weldment
58	B255011	Socket Head Cap Screw 1/4-20 x 3-1/8L
59.	3709370	Handle
60	**J252000**	**Hex Jam Nut 1/4 - 20**
61	J257000	1/4 - 20 Nylok Lock Nut
62	3709593	Barbed Female Connector
63	3709595	Shut Off Needle Valve
64	B191611	10-24 x 1 Socket Head Cop Screw
65	**3679116**	**Shut Off Valve Connector**
66	3709642	Coolant Line Assembly
67	6709160	Grinding Wheel Wrench

6709560 TRAVERSE & CARRIAGE ASSEMBLY

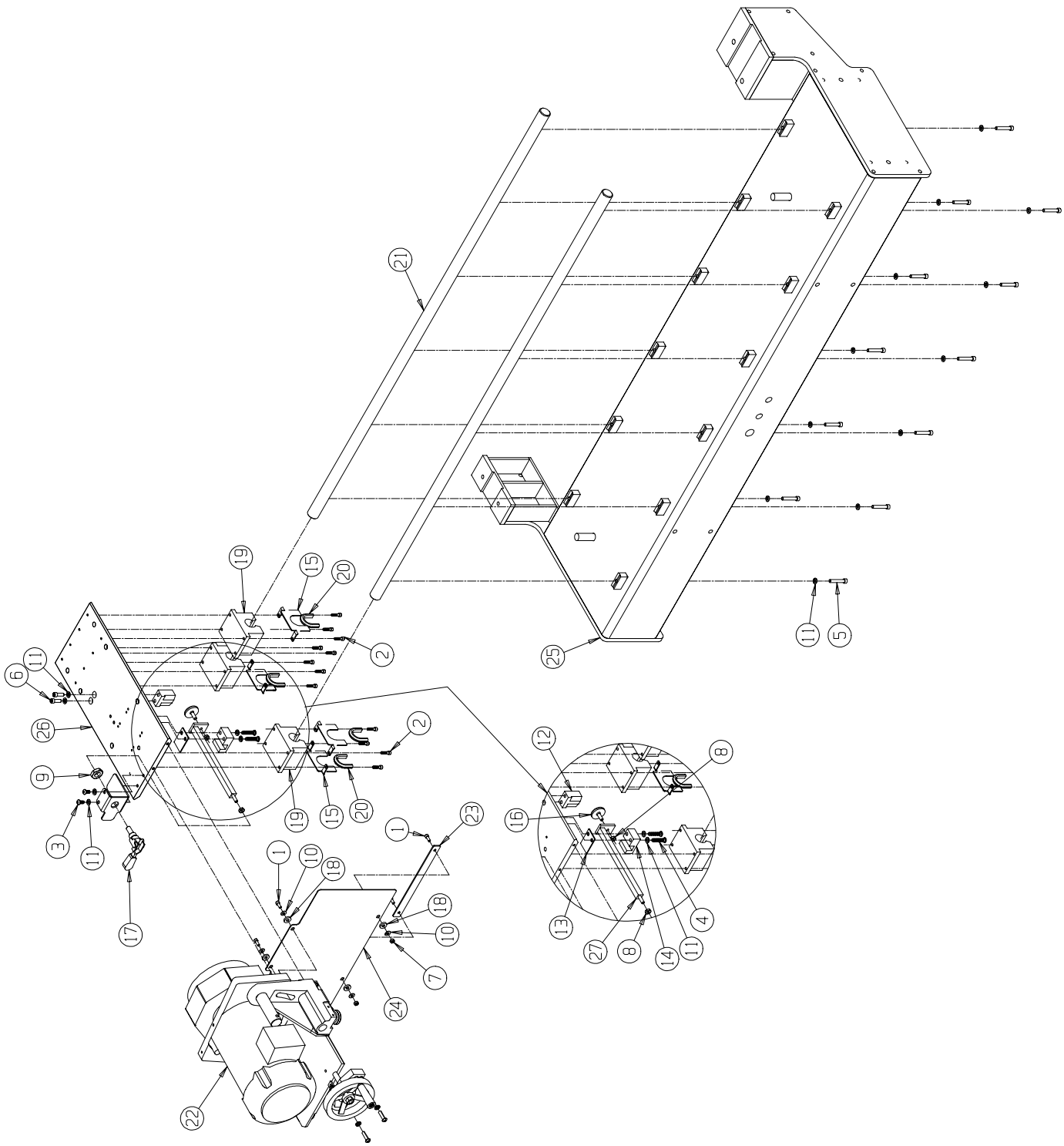

DIA. NO.	PART NO.	DESCRIPTION
1	B190811	Socket Head Cap Screw 10-24 x 1/2
2	B191211	Socket Head Cap Screw 10-24 x 3/4
3	B250816	Button Head Socket Cap Screw 1/4-20 x 1/2
4	B252016	Button Head Socket Cap Screw 1/4-20 x 1-1/4
5	**B252411**	**Socket Head Cap Screw 1/4-20 x 1-1/4**
6	B251026	Socket Head Cap Screw 1/4-28 x 5/8
7	J197000	10-24 Jam Locknut with Nylon Insert
8	J252000	1/4-20 Jam Hex Nut
9	J627200	5/8-18 Jam Locknut with Nylon Insert
10	**K190001**	**Flat Washer #10**
11	K251501	Split Lockwasher 1/4
12	6729004	Traverse Clamp Block
13	28188	Traverse Clamp Spacer
14	28189	Clamp Support Block
15	**28211**	**Rail Wiper Bracket - 1" Shaft**
16	50310	Belt Clamp Tip
17	80335	Destaco Clamp
18	3708691	Flat Washer .25 x .62 x .12 Thick
19	3709044	Linear Ball Bushing Bearing
20	**3709064**	**Foam Wiper**
21	6509063	Carrier Shaft
22	6609529	Grinding Head Assembly
23	6709039	Rubber Cover Bracket
24	6709149	Rubber Cover
25	**6709174**	**Traverse Base Machined**
26	6709180	Carriage
27	6709181	Traverse Camp Bracket
28	6709566	Belt Clamp Bar Assembly

6709562 BEDKNIFE SUPPORT ASSEMBLY

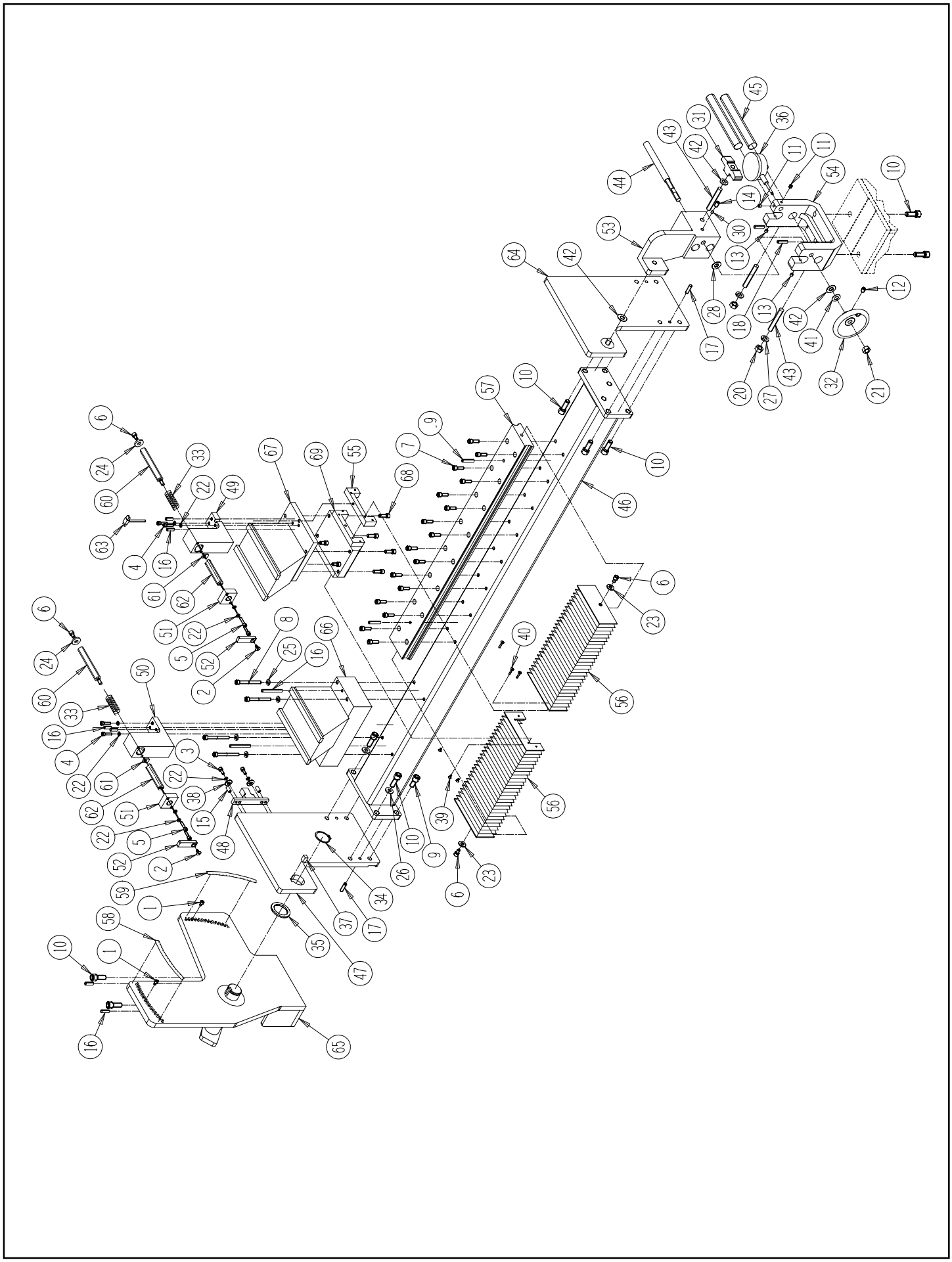

PARTS LIST (Continued) 6709562 BEDKNIFE SUPPORT ASSEMBLY

DIA. NO.	PART NO.	DESCRIPTION
1	B190411	Socket Head Cap Screw 10-24 x 1/4
2	B190605	Flat Head Socket Cap Screw 10-24 x 3/8
3	B191011	Socket Head Cap Screw10-24 x 3/8
4	B191211	Socket Head Cap Screw 10-24 x 3/4
5	**B191611**	**Socket Head Cap Screw 10-24 x 1**
6	B250611	Socket Head Cap Screw 1/4-20 x 3/8
7	B251411	Socket Head Cap Screw 1/4-20 x 7/8
8	B253611	Socket Head Cap Screw 1/4-20 x 2-1/4
9	B371211	Socket Head Cap Screw 3/8-16 x 3/4
10	**B371611**	**Socket Head Cap Screw 3/8-16 x 1**
11	C190420	Set Screw Cup Point 10-24 x 1/4
12	C250420	Set Screw Cup Point 1/4-20 x 1/4
13	C250627	Set Screw Cup Point 1/4-20 x 3/8 with nylon patch
14	C310420	Set Screw Cup Point 5/16-18 x 1/4
15	**H250802**	**Roll Pin .25D x .50LG**
16	H251202	Roll Pin .25D x .75LG
17	H251406	Drive Lock Pin .25D x .875LG
18	H251602	Roll Pin .25D x 1.00 LG
19	H251802	Roll Pin .25D x 1.125LG
20	**J371000**	**Hex Nut 3/8-16**
21	J377000	Nylon Locknut Jam 3/8-16
22	K191501	Split Lockwasher #10
23	K250001	Flat Washer 1/4
24	K250101	Washer - Flat .31 x .73 x .052T
25	**K251501**	**Split Lockwasher 1/4**
26	K310101	Flat Washer 5/16
27	K371501	Split Lockwasher 3/8
28	09054	3/8 ID x 5/8 OD X 1/16 Thick Flat Washer
30	**3579109**	**Nylon Plug 3/16 Diameter**
31	3708245	T-Knob 2.5 3/8-16F
32	3708393	Handwheel 3.5 Diameter
33	3708554	Compression Spring .6250D x 3.0L
34	3708563	Retaining Extension Ring 5100-118
35	**3708564**	**Oilite Thrust Bearing 1.25ID**
36	3708581	Inch Dial Indicator
37	3708593	Square Key 5/16 x 1/2L
38	3708691	Washer .25 x .62 OD x .12
39	3708701	Button Head Socket Cap Screw M3-.5 x 16
40	**3708702**	**Button Head Socket Cap Screw M3-.5 x 30**
41	3709062	Conical Washer .382 x .75 x .035
42	3709304	Thrust Washer
43	6009035	Locking Stud Shaft
44	6009036	Acme Adjusting Shaft
45	**6009095**	**Slide Shaft**
46	6709004	Machined Tooling Bar
47	6709008	Left-hand Pivot Plate
48	6709011	Index Stop Bracket
49	6709012	Right-Hand Gage Base
50	**6709013**	**Left-Hand Gage Base**
51	6709015	Retainer Block Gage
52	6709021	Gage Tip
53	6709107	Tooling Slide Mounting
54	6709108	Cross Slide Support
55	**6709134**	**Bearing Block Lock Block**
56	6709135	Rail Bellows 25/70
57	6709136	Wide Machined Rail 25/70
58	6709151	Decal - Upper Tooling Index
59	6709152	Decal - Lower Tooling Index
60	**6709162**	**Shaft - Gage Spring Retainer**
61	6709163	Gage Shaft Flag
62	6709164	Gage Shaft
63	6709501	Tee Knob Assembly
64	6709519	Pivot Bearing Assembly
65	**6709532**	**Tooling Mounting Bracket Assembly**
66	6729510	Magnet Repair Assembly - INA 672
67	6729510	Magnet Repair Assembly - INA 672
68	B251211	Socket Head Cap Screw 1/4 -20 x 3/4
69	3708694	Linear Bearing Wide

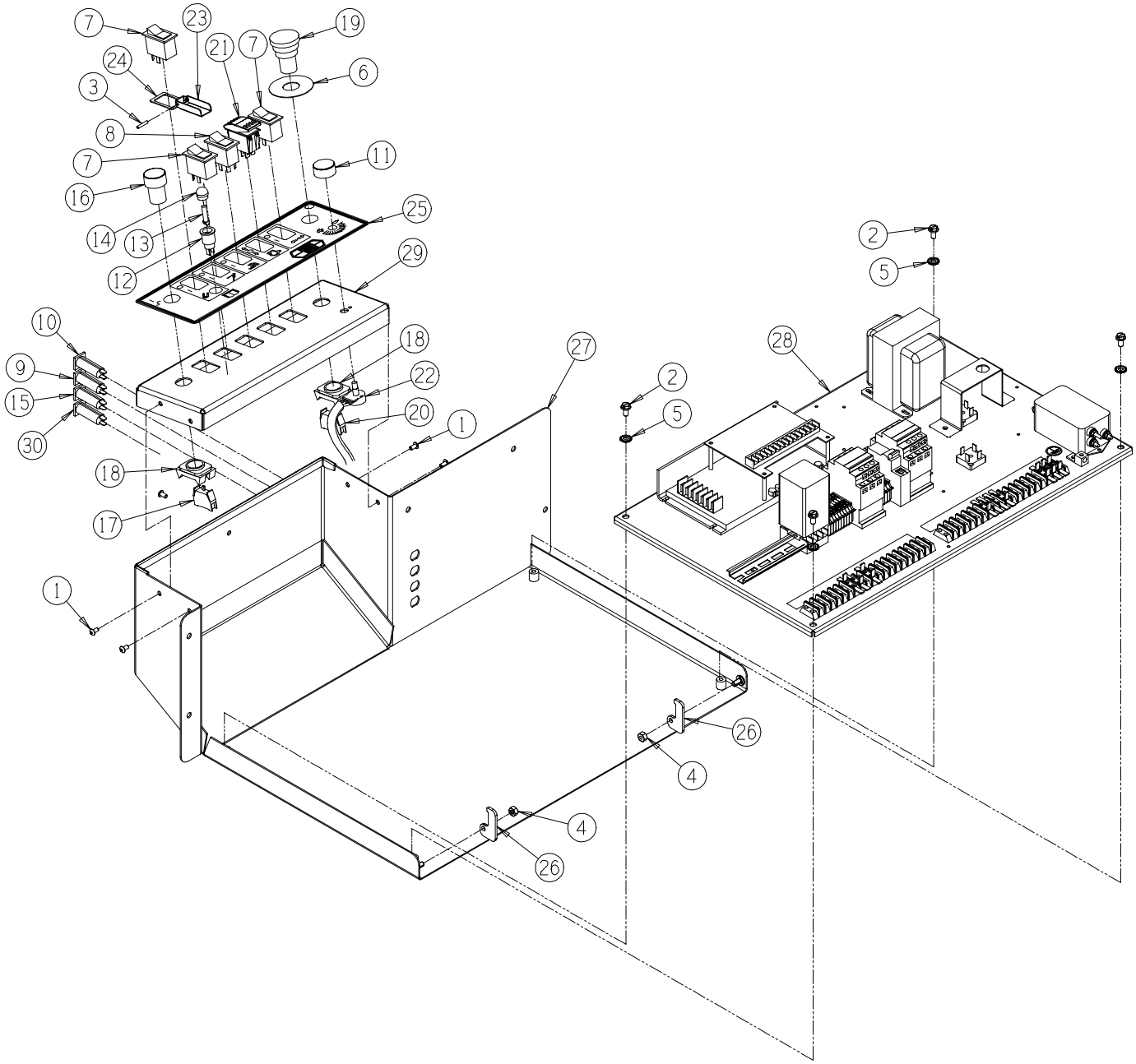
7
23
19
24
21
7
6
3
8
11
7
16
25
14
13
2
29
12
5
10
18
27
28
9
22
2
15
20
5
1
30
18
17
1
26
4
4
26

6709571 CONTROL PANEL ASSEMBLY

DIAGRAM NO.	PART NO.	DESCRIPTION
1	B190634	Button Head Cap Screw 10-32 x 3/8
2	D250800	Thread Cutting Screw 1/4-20 x 1/2
3	H121302	Roll Pin 1/8 Dia. x 13/16
4	J257000	Nylon Locknut Jam 1/4-20
5	**R000536**	**Internal Teeth Lock Washer 1/4**
6	3707342	Yellow E-Stop Ring
7	3707367	Rocker Switch On/Off DPST
8	3707429	Rocker Switch On/Off DPDT
9	3707443	4 Amp Circuit Breaker
10	**3707444**	**10 Amp Circuit Breaker**
11	3707446	Pot Knob with Pointer
12	3707487	Pilot Lamp Socket
13	3707489	Lamp - 24V
14	3707539	Green Fluted Dome Lens
15	**3707543**	**12 Amp Circuit Breaker**
16	3707564	Green Start Pushbutton
17	3707565	Contact Block NO
18	3707566	Switch Mounting Latch
19	3707567	Push/Pull Red Stop Button
20	**3707568**	**Contact Block NC**
21	3707713	Momentary Rocker Switch On/Off/On
22	6009199	Traverse Potentiometer Assembly
23	6709122	Switch Guard Cover
24	6709123	Switch Guard Base
25	**6709206**	**Control Panel Decal**
26	6709213	Control Panel Travel Stop
27	6709567	Control Panel Weldment
28	6709570	Electrical Sub Panel
29	6709572	Control Top Weldment
30	**3707442**	**2 Amp Circuit Breaker**

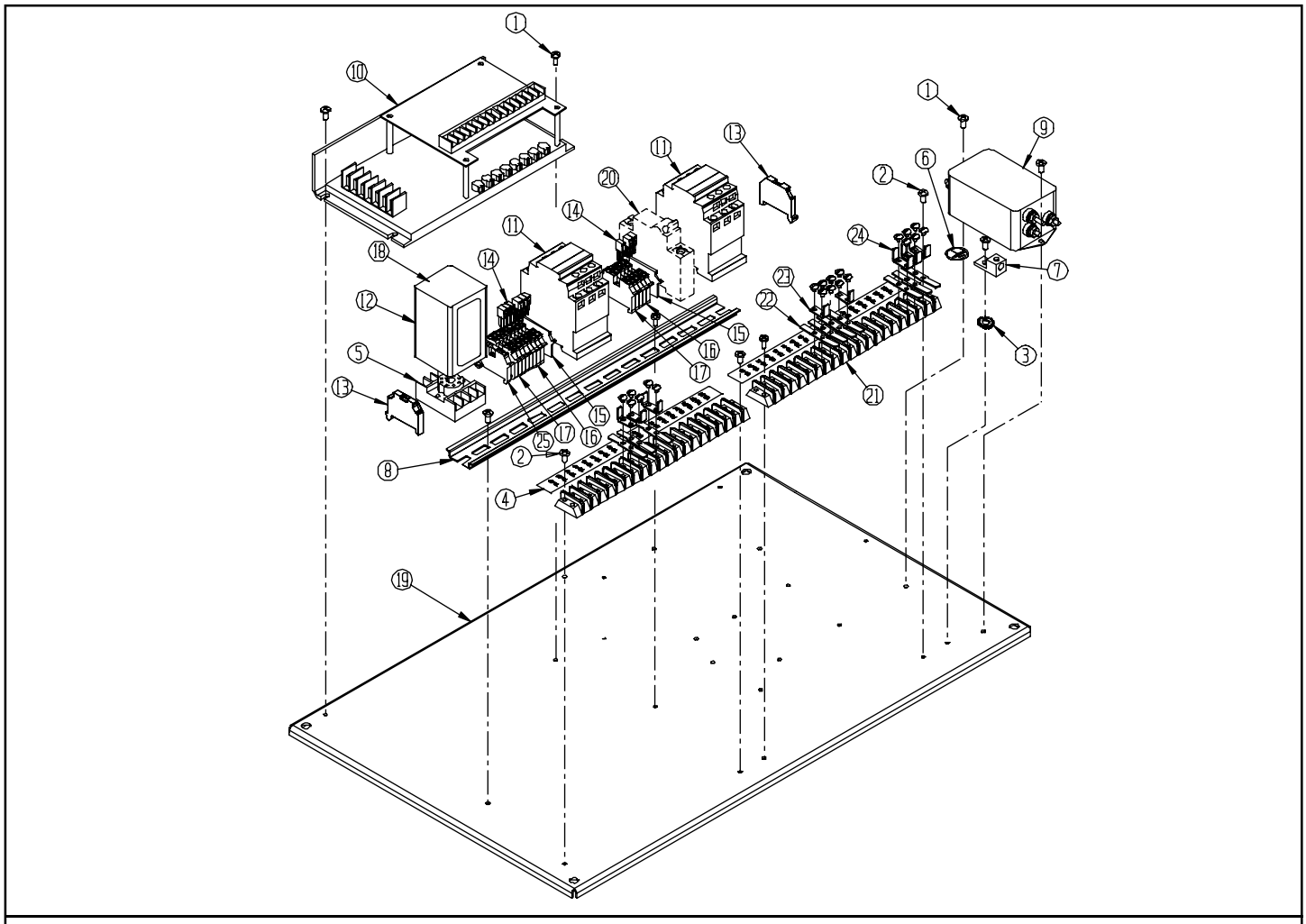
1
10
1
9
13
11
20
6
2
14
11
24
18
14
7
23
12
22
15
16
3
5
17
21
13
15
17
16
25
2
8
4
19

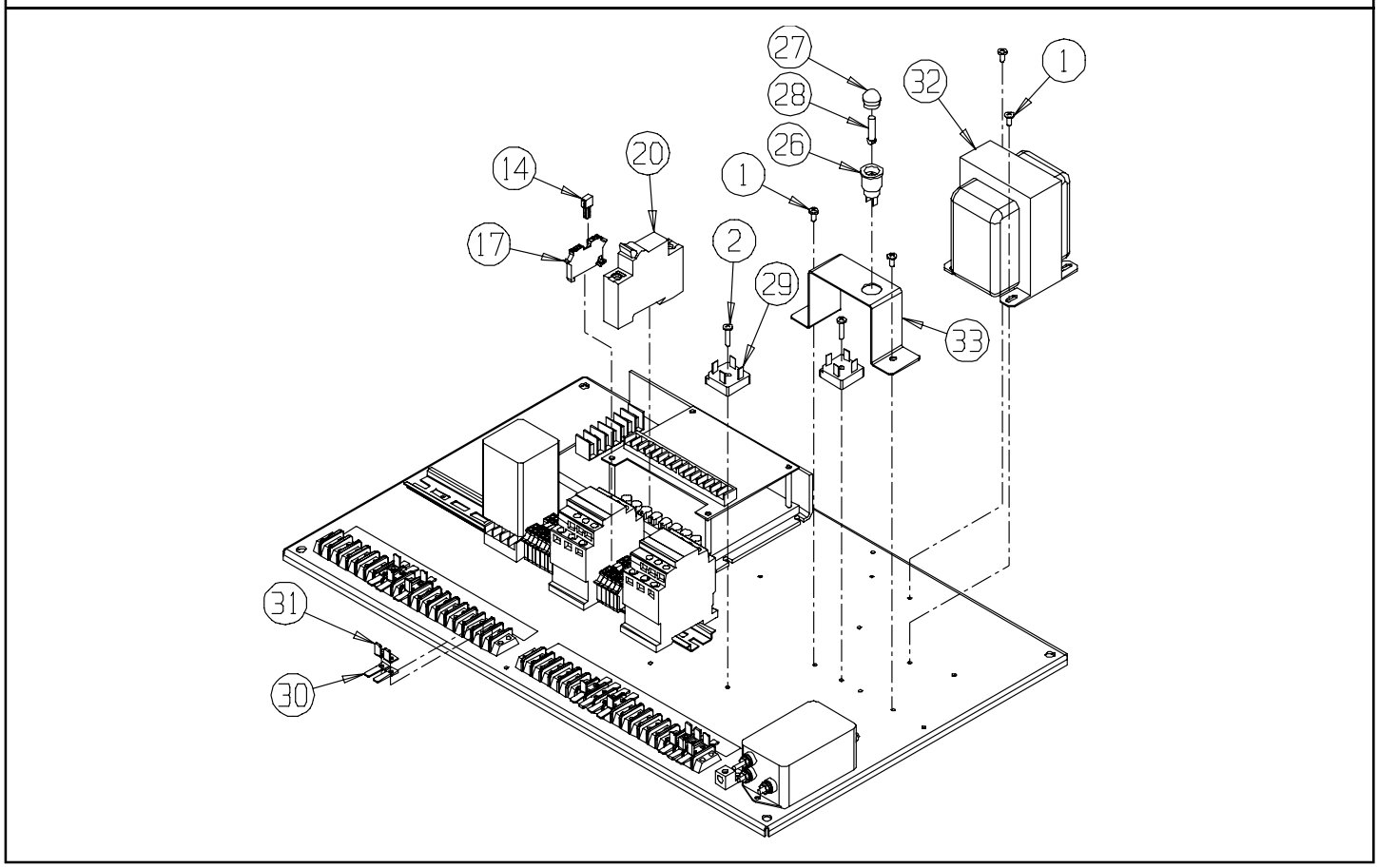
27
1
32
28
26
14
20
1
17
2
29
33
31
30

PARTS LIST (Cont.) 3707375 & 6709570 CONTROL PANEL SUB-ASSEMBLY

DIAGRAM NUMBER	PART NUMBER	DESCRIPTION
1	D160666	Pan Head Self-Tapping Screw #8 x 3/8 Long
2	D161266	Pan Head Self-Tapping Screw #8 x 3/4 Long
3	R000480	#8 Lockwasher
4	55223	Terminal Strip Decal
5	3707073	8-Pin socket
6	3707163	Primary Ground Decal
7	3707164	Primary Ground Lug
8	3707378	14" Din Rail
9	3707654	Power Line Filter 20 Amp
10	3707550	Traverse Control Board
	3707546	3-Amp Slow-Blo fuse for Traverse Board
11	3707556	Magnetic Starter
12	3707688	High/Low Voltage Sensor Relay
13	3707625	Screwless Terminal Bock End Stop
14	3707626	Terminal Block Jumper
15	3707627	Terminal Block End Plate
16	3707628	2-Conductor Terminal Block - Grey
17	3707629	2-Conductor Terminal Block - Blue
18	3708920	Low Voltage Warning Decal
19	6009270	Electrical Sub Panel
20	80259	20-Amp Circuit Breaker
21	3707706	19 Pole Terminal Strip
22	3707707	Double Spade Terminal
23	3707709	Single Spade Terminal 90°
24	3707708	Double Spade Terminal 90°
25	3707624	2-Conductor Terminal Block - Ground
26	3707487	Lamp Socket
27	3707488	Amber Dome Lens
28	3707489	24V Lamp
29	3707589	Bridge Diode - 25 Amp
30	3707741	Flat Single Spade Terminal
31	3707742	90° Single Spade Terminal
32	6709073	Transformer Assembly
33	6709201	Power Light Bracket

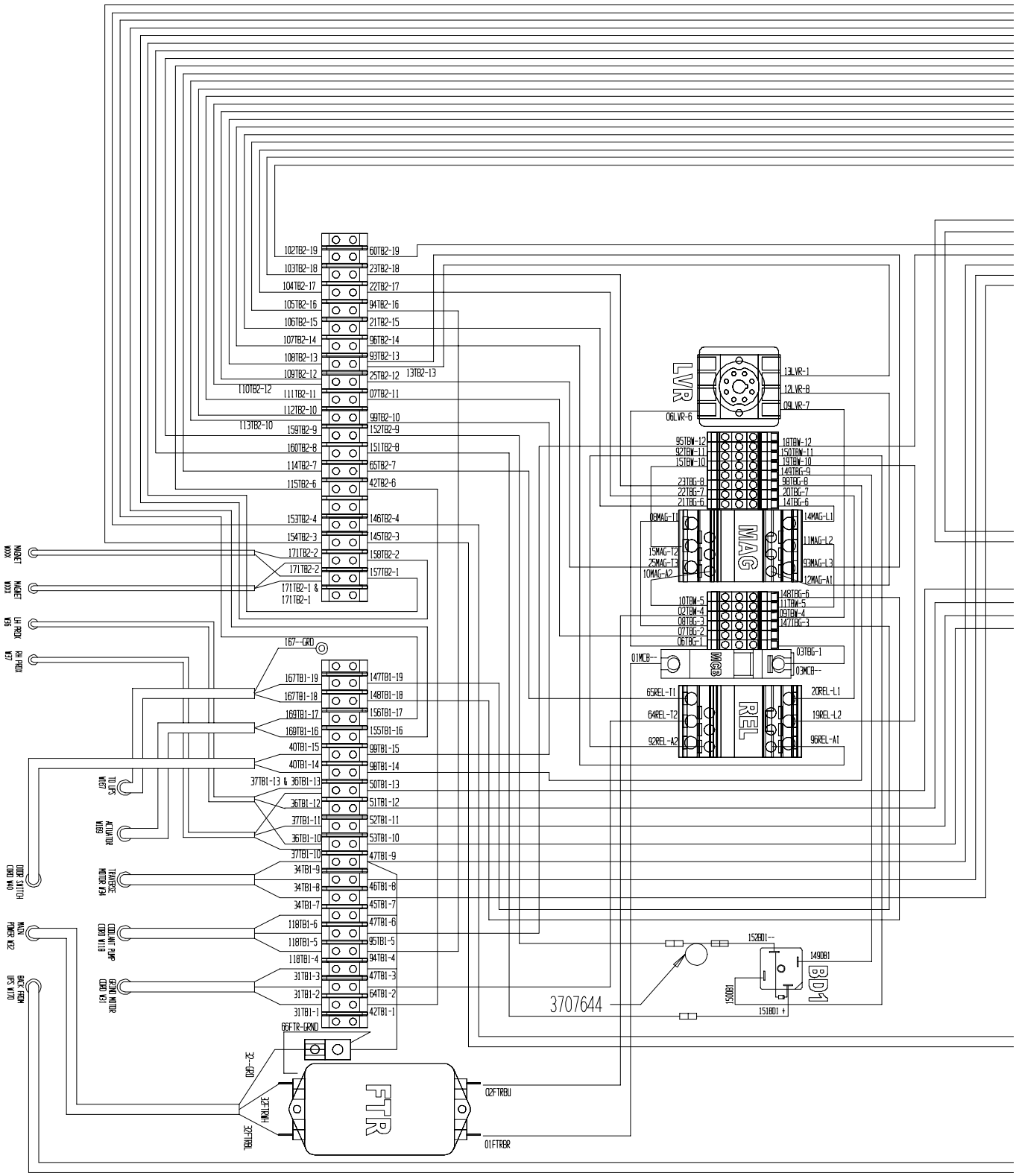
LVR
MAG
MCB
REL
BD1
FTR
3707644
MAGNET WXXX
MAGNET WXXX
LH PADX W6
RH PADX W7
TILT SW W19
ACTUATOR W18
DOOR SWITCH CDR W4
TRAVERSE MOTOR W4
MAIN POWER W22
CDR MVT PWR CDR W11
GRND MOTOR CDR W1
BACK PADX SPS W10

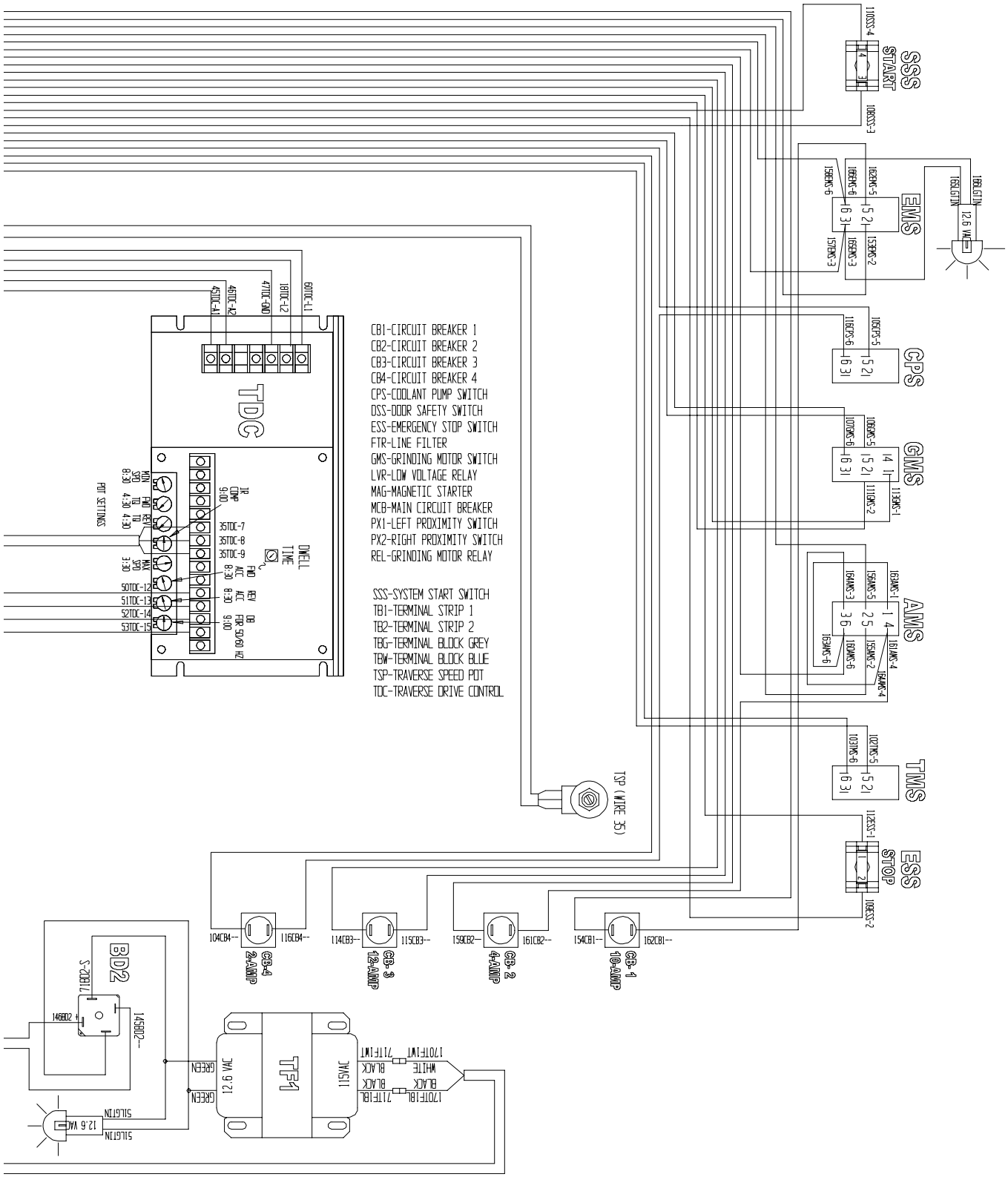
SSS
START
EMS
CPS
GMS
AMS
TMS
ESS
STOP
TDC
CB1-CIRCUIT BREAKER 1
CB2-CIRCUIT BREAKER 2
CB3-CIRCUIT BREAKER 3
CB4-CIRCUIT BREAKER 4
CPS-COOLANT PUMP SWITCH
DSS-DOOR SAFETY SWITCH
ESS-EMERGENCY STOP SWITCH
FTR-LINE FILTER
GMS-GRINDING MOTOR SWITCH
LVR-LOW VOLTAGE RELAY
MAG-MAGNETIC STARTER
MCB-MAIN CIRCUIT BREAKER
PX1-LEFT PROXIMITY SWITCH
PX2-RIGHT PROXIMITY SWITCH
REL-GRINDING MOTOR RELAY
SSS-SYSTEM START SWITCH
TB1-TERMINAL STRIP 1
TB2-TERMINAL STRIP 2
TBG-TERMINAL BLOCK GREY
TBW-TERMINAL BLOCK BLUE
TSP-TRAVERSE SPEED POT
TDC-TRAVERSE DRIVE CONTROL
TSP (WIRE 35)
CB-4 2-AMP
CB-3 12-AMP
CB-2 4-AMP
CB-1 10-AMP
BD2
TF1
12.6 VAC

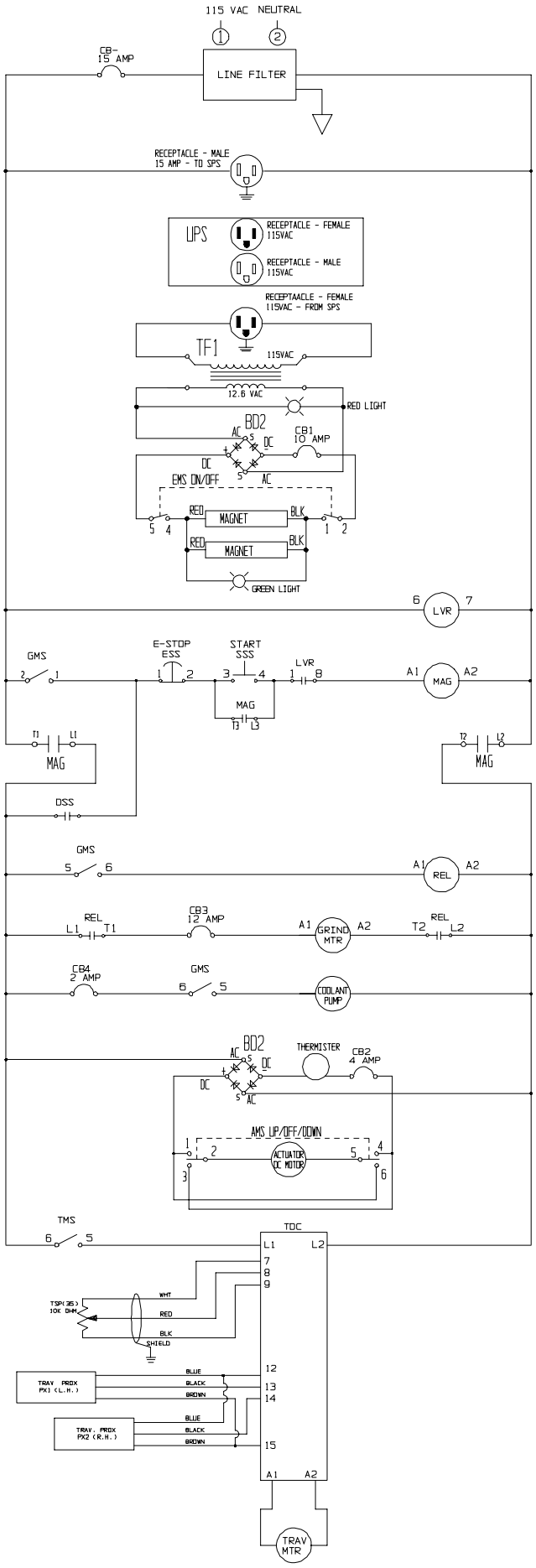

AMS - ACTUATOR MOTOR SWITCH
BD1 - BRIDGE DIODE 1
DB2 - BRIDGE DIODE 2
CB- - MAIN CIRCTUIT BREAKER
CB1 - CIRCUIT BREAKER 1
CB2 - CIRCUIT BREAKER 2
CB3 - CIRCUIT BREAKER 3
CB4 - CIRCUIT BREAKER 4
CPS - COOLANT PUMP SWITCH
DSS - DOOR SAFETY SWTICH
EMS - ELECTROMAGNET SWITCH
ESS - EMERGENCY STOP SWITCH
GMS - GRINDING MOTOR SWITCH
LVR - LOW VOLTAGE RELAY
MAG - MAGNETIC STARTER
PX1 - LEFT PROXIMITY SWITCH
PX2 - RIGHT PROXIMITY SWITCH
REL - GRINDING MOTOR RELAY
SSS - SYYSTEM START SWITCH
TDC - TRAVERSE DRIVE CONTROL
TF1 - TRANSFORMER ASSEMBLY
TMS - TRAVERSE MOTOR SWITCH
TSP - TRAVERSE SPEED POT
UPS - UNINTERUPTABLE POWER SUPPLY