ORDER No. 03-SM-016

Service Manual

Colour Television

TX-29PS2D
TX-29PS2F
TX-29PS2P
TX-29PS2P/B

GP3 Chassis

SPECIFICATIONS

Power Source: 220-240V a.c., 50Hz

Power Consumption: 75W

Stand-by Power Consumption: 0,9W

Aerial Impedance: 75Ω unbalanced, Coaxial Type

Receiving System: PAL-I, B/G, D/K, PAL-525/60
SECAM B/G, D/K, L/L'
M.NTSC (AV only)
NTSC (AV only)

Receiving Channels:

VHF E2-E12	VHF H1-H2 (ITALY)
VHF A-H (ITALY)	VHF R1-R2
VHF R3-R5	VHF R6-R12
UHF E21-E69	CATV (S01-S05)
CATV S1-S10 (M1-M10)	CATV S11-S20 (U1-U10)
CATV S21-S41 (HYPERBAND)	

Intermediate Frequency:
Video/Audio

Video	38,9MHz, 33,9MHz
Sound	33,4MHz (B/G), 33,16MHz (A2) 33,05MHz (NICAM B/G,D/K,L) 32,4MHz (D/K),32,66MHz (CZ STEREO) 40,4MHz (L'), 39,75MHz (L'NICAM)
Colour	34,47MHz (PAL) 34,5MHz, 34,65MHz (SECAM) 38,3MHz, 38,15MHz (SECAM L')

Terminals:

AUDIO MONITOR OUT	Audio (RCAx2)	500mV rms 1kΩ
AV1 IN	Video (21 pin)	1V p-p 75Ω
	Audio (21 pin)	500mV rms 10kΩ
	RGB (21 pin)	0,7V p-p 75Ω
AV1 OUT	Video (21 pin)	1V p-p 75Ω
	Audio (21 pin)	500mV rms 1kΩ
AV2 IN	Video (21 pin)	1V p-p 75Ω
	Audio (21 pin)	500mV rms 10kΩ
AV2 OUT	Video (21 pin)	1V p-p 75Ω
	Audio (21 pin)	500mV rms 1kΩ
AV2 FRONT	Audio (RCAx2)	500mV rms 10kΩ
	Video (RCAx1)	1V p-p 75Ω

High Voltage: 31,0kV ± 1kV

Picture Tube: A68ELO50X21 68cm

Audio Output: 2x5W RMS, 2x10W MPO,
8Ω impedance

Headphones: 8Ω Impedance

Accessories supplied : Remote Control
2 x R6 (UM3) Batteries

Dimensions:

Height:	585mm
Width:	776mm
Depth:	533mm

Net weight: 49,5kg

Specifications are subject to change without notice.
Weights and dimensions shown are approximate.

Panasonic

CONTENTS

SAFETY PRECAUTIONS 2
SERVICE HINTS 3
ADJUSTMENT PROCEDURE AND SELF-CHECK 4
WAVEFORM PATTERN TABLE 5
ALIGNMENT SETTINGS 6
BLOCK DIAGRAMS 7
PARTS LOCATION 11
REPLACEMENT PARTS LIST 12
SCHEMATIC DIAGRAMS 21
CONDUCTOR VIEWS 23

SAFETY PRECAUTION

GENERAL GUIDE LINES

1. It is advisable to insert an isolation transformer in the a.c. supply before servicing a hot chassis.
2. When servicing, observe the original lead dress in the high voltage circuits. If a short circuit is found, replace all parts that have been overheated or damaged by the short circuit.
3. After servicing, see that all the protective devices such as insulation barriers, insulation papers, shields and isolation R-C combinations are correctly installed.
4. When the receiver is not being used for a long period of time, unplug the power cord from the a.c. outlet.
5. Potentials as high as 32kV are present when this receiver is in operation. Operation of the receiver without the rear cover involves the danger of a shock hazard from the receiver power supply. Servicing should not be attempted by anyone who is not familiar with the precautions necessary when working on high voltage equipment. Always discharge the anode of the tube.
6. After servicing make the following leakage current checks to prevent the customer from being exposed to shock hazard.

LEAKAGE CURRENT COLD CHECK

1. Unplug the a.c. cord and connect a jumper between the two prongs of the plug.
2. Turn on the receiver's power switch.
3. Measure the resistance value with an ohmmeter, between the jumpered a.c. plug and each exposed metallic cabinet part on the receiver, such as screw heads, aerials, connectors, control shafts etc. When the exposed metallic part has a return path to the chassis, the reading should be between 4M ohm and 20M ohm. When the exposed metal does not have a return path to the chassis, the reading must be infinite.

LEAKAGE CURRENT HOT CHECK

1. Plug the a.c. cord directly into the a.c. outlet. Do not use an isolation transformer for this check.
2. Connect a 2kΩ 10W resistor in series with an exposed metallic part on the receiver and an earth, such as a water pipe.
3. Use an a.c. voltmeter with high impedance to measure the potential across the resistor.
4. Check each exposed metallic part and check the voltage at each point.
5. Reverse the a.c. plug at the outlet and repeat each of the previous measurements.
6. The potential at any point should not exceed 1,4 Vrms. In case a measurement is outside the limits specified, there is a possibility of a shock hazard, and the receiver should be repaired and rechecked before it is returned to the customer.

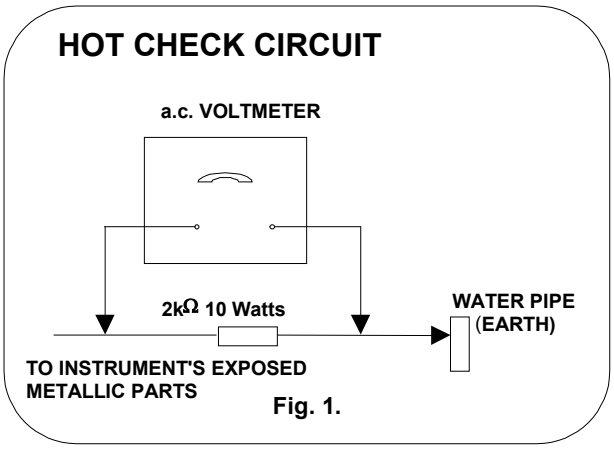

Fig. 1.

X-RADIATION WARNING

1. The potential sources of X-Radiation in TV sets are the high voltage section and the picture tube.
2. When using a picture tube test jig for service, ensure that the jig is capable of handling 32kV without causing X-Radiation.

NOTE: It is important to use an accurate periodically calibrated high voltage meter.

1. Set the brightness to minimum.
2. Measure the high voltage. The meter should indicate: 31kV ± 1kV.
   If the meter indication is out of tolerance, immediate service and correction is required to prevent the possibility of premature component failure.
3. To prevent any X-Radiation possibility, it is essential to use the specified tube.

SERVICE HINTS

How to remove the rear cover

1. Remove the 10 screws as shown in Fig.2.

Fig. 2

LOCATION OF CONTROLS

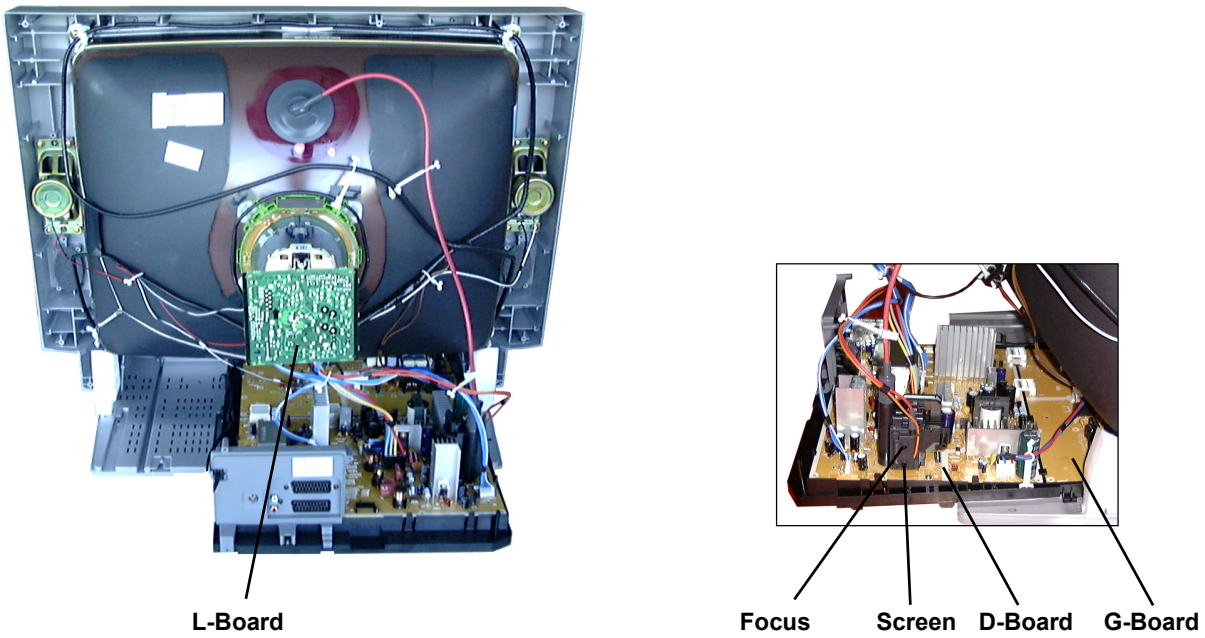

Fig. 3

ADJUSTMENT PROCEDURE

Item / Preparation	Adjustments
+B SET-UP 1. Receive a Window pattern. 2. Set the controls : Brightness Minimum Contrast Minimum	Confirm the following voltages: **TP4** 5 ± 0,25V **TP14** 5 ± 0,25V **TP5*** 16 ± 0,5V **TP21** 11,5 ± 0,5V **TP6** 8 ± 0,5V **TP120** 28,5 ± 3V **TP7** 7,7 ± 0,5V **TP121** 215 ± 10V **TP8** 3,3 ± 0,2V **TP123** -14V ± 1V **TP11**** 11,7 ± 0,5V **TP124** 14 ± 1V **TP12** 142 ± 1,5V * Volume to minimum ** Volume to maximum
UG2 / CUT OFF 1. Receive a Window pattern. 2. Set Brightness and Contrast to minimum. 3. Set the TV into Service Mode 1. 4. Select UG2 item.	Press "**+**" or "**-**". Adjust the screen VR till LED is just switched on.

SELF CHECK

Self-check is used to automatically check the bus lines and hexadecimal code of the TV set.To enter Self-Check mode, press the **STATUS** button on the remote control and at the same time press the down **(-/v)** button on the customer controls at the front the TV set. To exit Self Check, switch off the TV set at the power button.

	TX-29PS2D	TX-29PS2F TX-29PS2P TX-29PS2P/B
OPTION 1	7C	FC
OPTION 2	27	27

WAVEFORM PATTERN TABLE

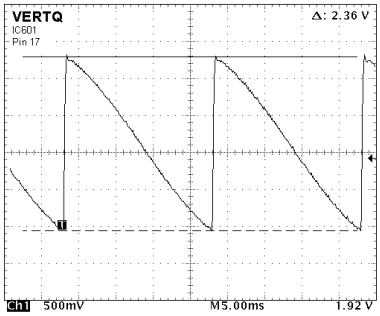

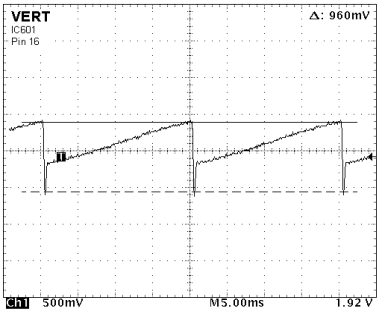

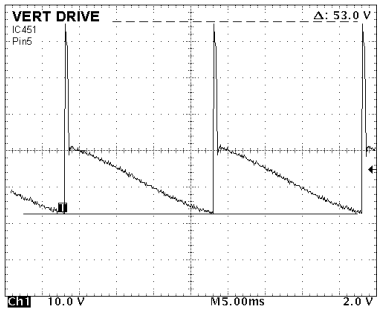

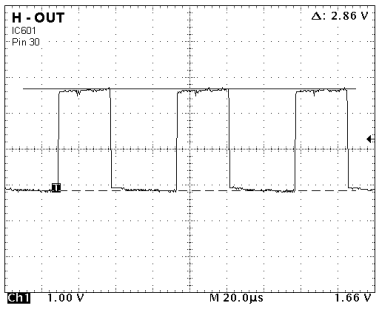

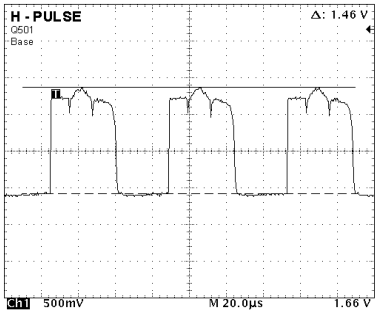

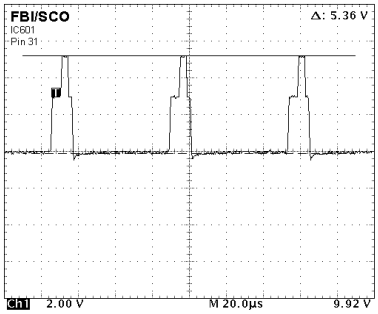

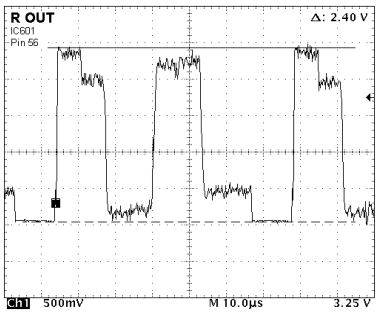

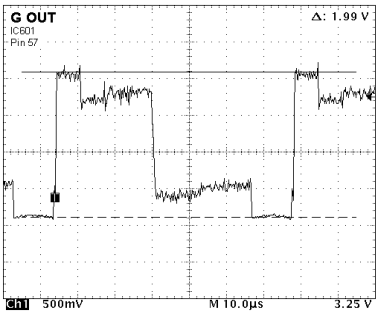

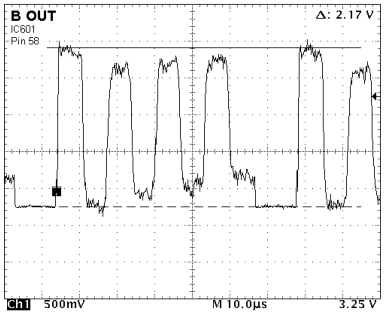

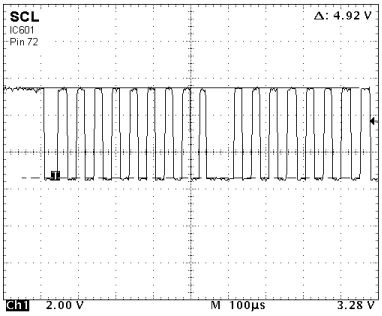

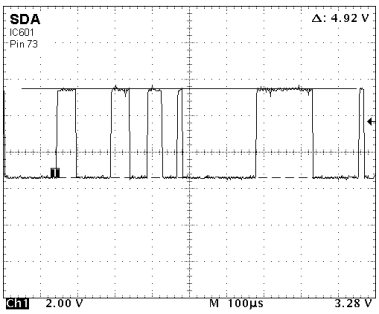

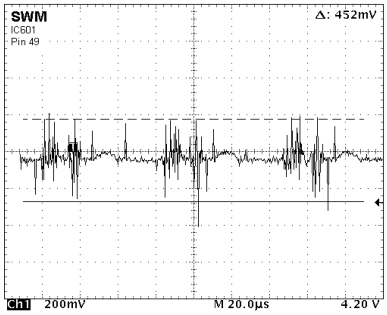

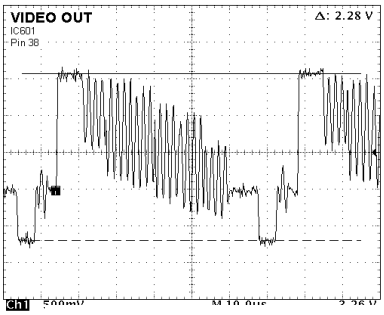

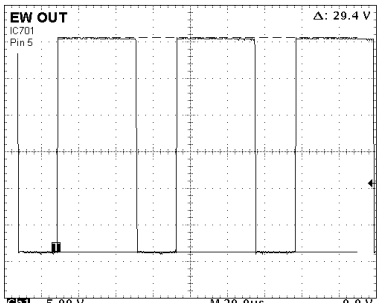

CONDITIONS: Contrast: MAX, Brightness: MID, Colour: MID, Sharpness: MID

ALIGNMENT SETTINGS

(The figures below are nominal and used for representative purposes only.)
To access Service Mode select program position 99 and set sharpness to minimum.
Press "**MUTE**" button on remote control and at the same time press the "∨" button on the customer controls at the front of the TV, this will place the TV set into Service Mode1.
Press ∧ / ∨ buttons to step up / down through the functions.
Press **+ / -** buttons to alter the function values.
Press "**STR**" button on the customer controls at the front of the TV after each adjustment has been made to store the required values.
To exit Service Mode press "**N**" button.

Alignment Function	**Setting indication** **Note**: All setting values are approximate	**Settings / Special features**
EAROM copy	TV/EXT	---
UG2	LED ON/OFF	LED to be just ON
Verical Slope	V-SLO 31	Optimum setting.
Vertical Position	V-POS 37	Optimum setting.
Vertical Amplitude	V-AMP 22	Optimum setting.
Horizontal Shift	H-CTR 38	Optimum setting.
Horizontal Parallelogram	H-PARA 26	Optimum setting.
Horizontal Bow	H-BOW 26	Optimum setting.
R-CUT	R-CUT 29	Optimum setting.
G-CUT	G-CUT 36	Optimum setting.
R-Drive	R-DRV 40	Optimum setting.
G-Drive	G-DRV 20	Optimum setting.
B-Drive	B-DRV 31	Optimum setting.
AGC	AGC 26	Optimum setting.
Sub Colour	S-COL 28	Optimum setting.
Sub Brightness	S-BRI 31	Optimum setting.
EW Horizontal Width	EW-WD 16	Optimum setting.
EW Parabola	EW-PR 25	Optimum setting.
EW Upper Corners	EW-UC 29	Optimum setting.
EW Lower Corners	EW-LC 33	Optimum setting.
EW Trapezoid	EW-TP 27	Optimum setting.

VIDEO & STEREO AUDIO BLOCK DIAGRAM

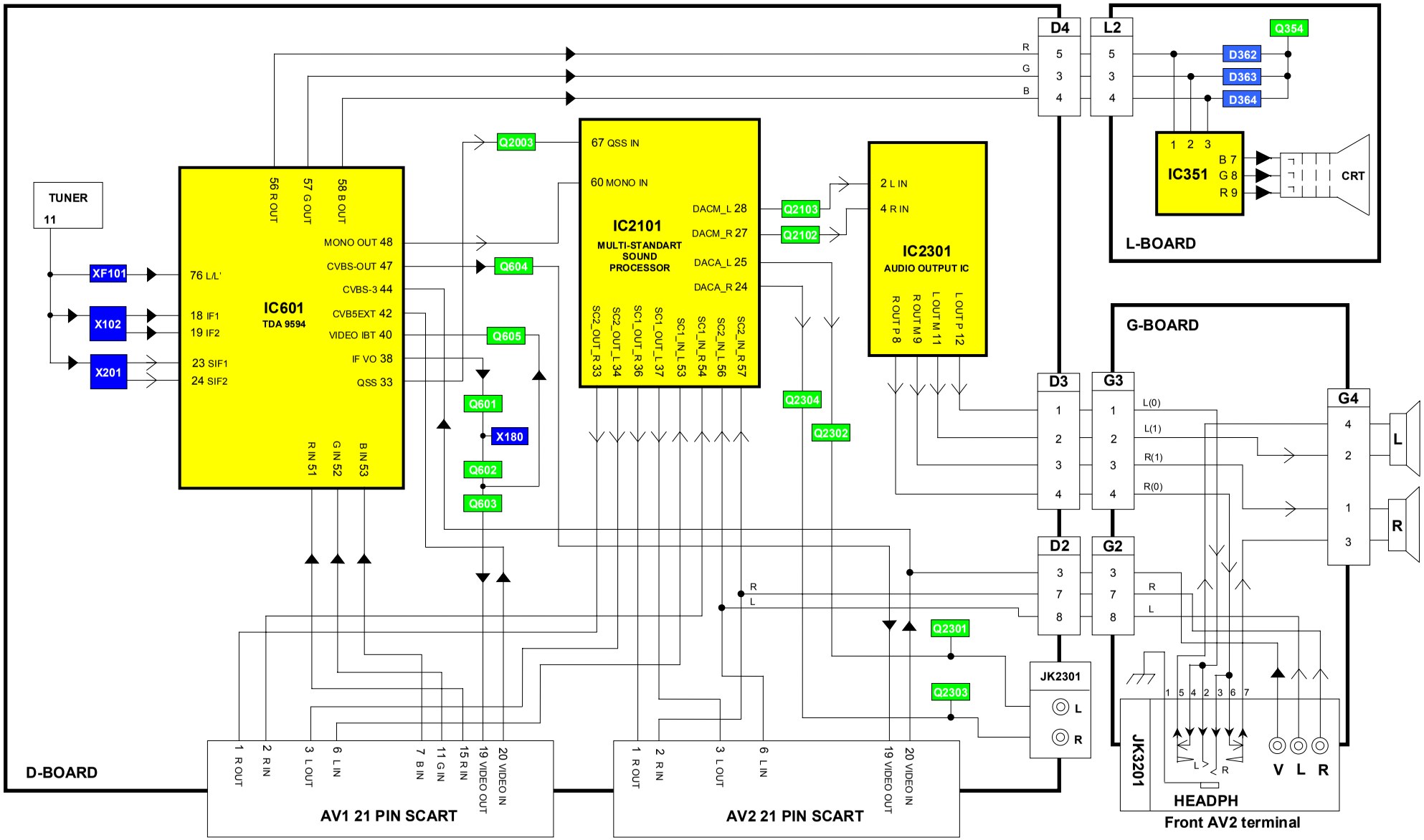

POWER SUPPLY BLOCK DIAGRAM

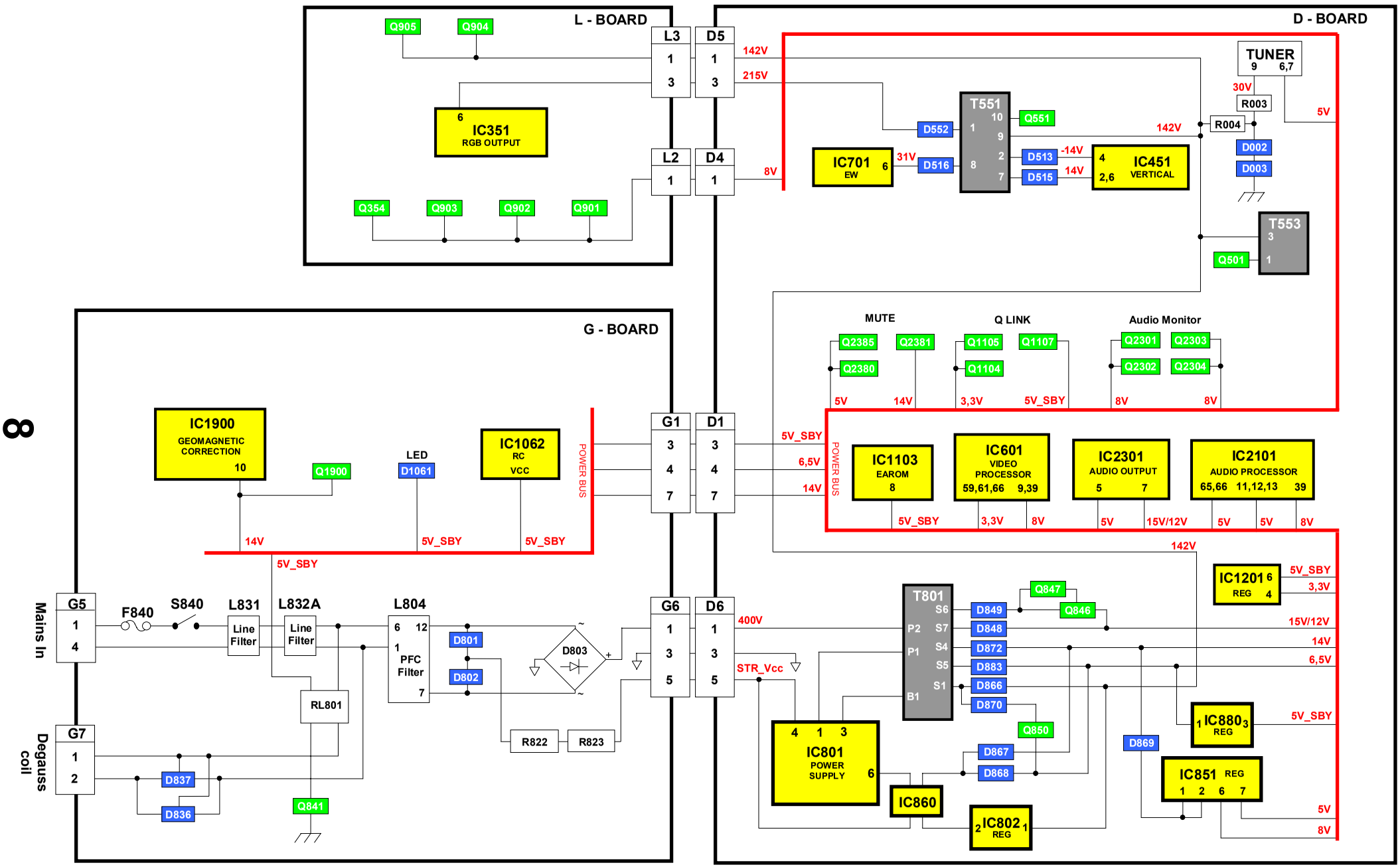

CONTROL BLOCK DIAGRAM

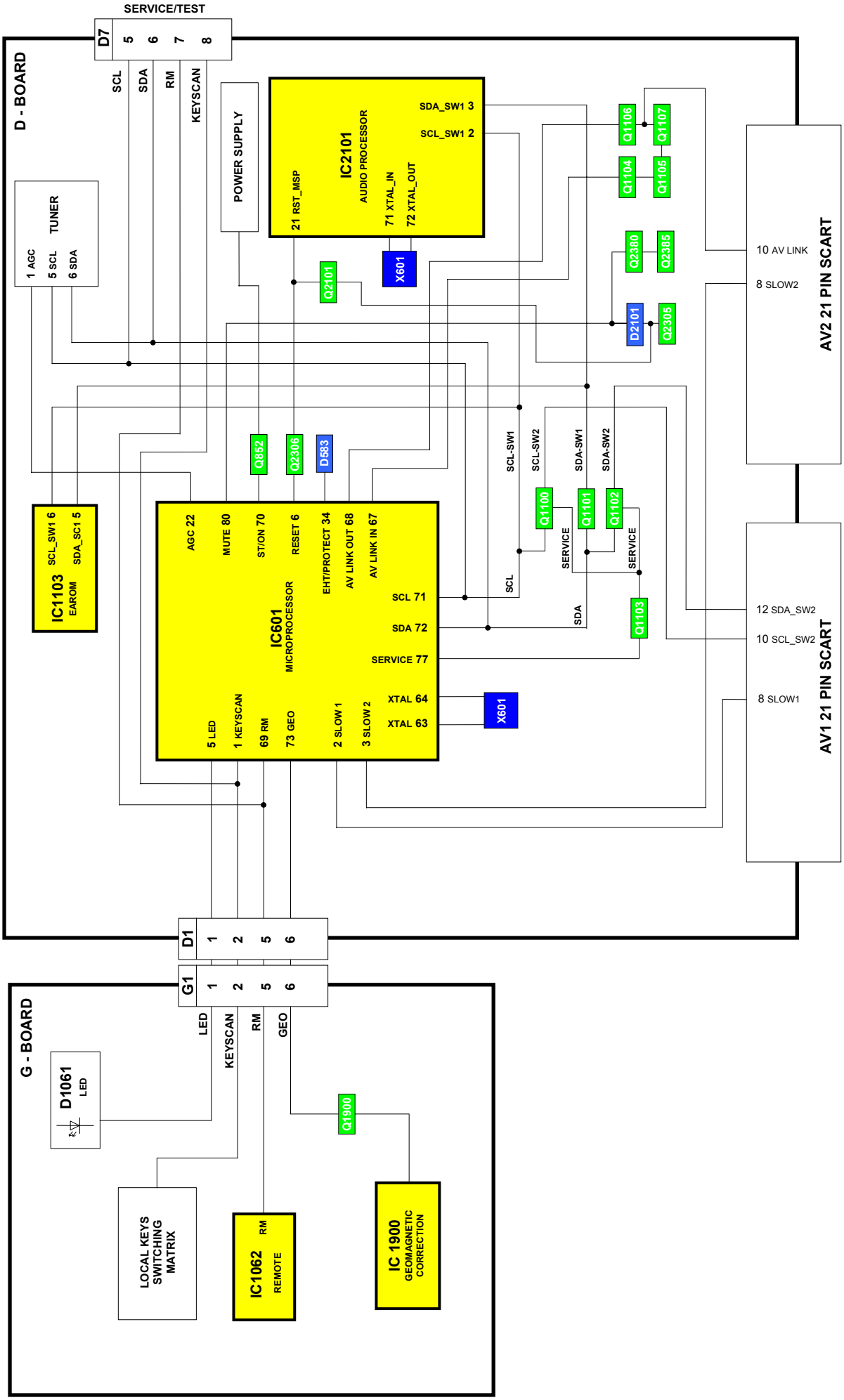

DEFLECTION BLOCK DIAGRAM

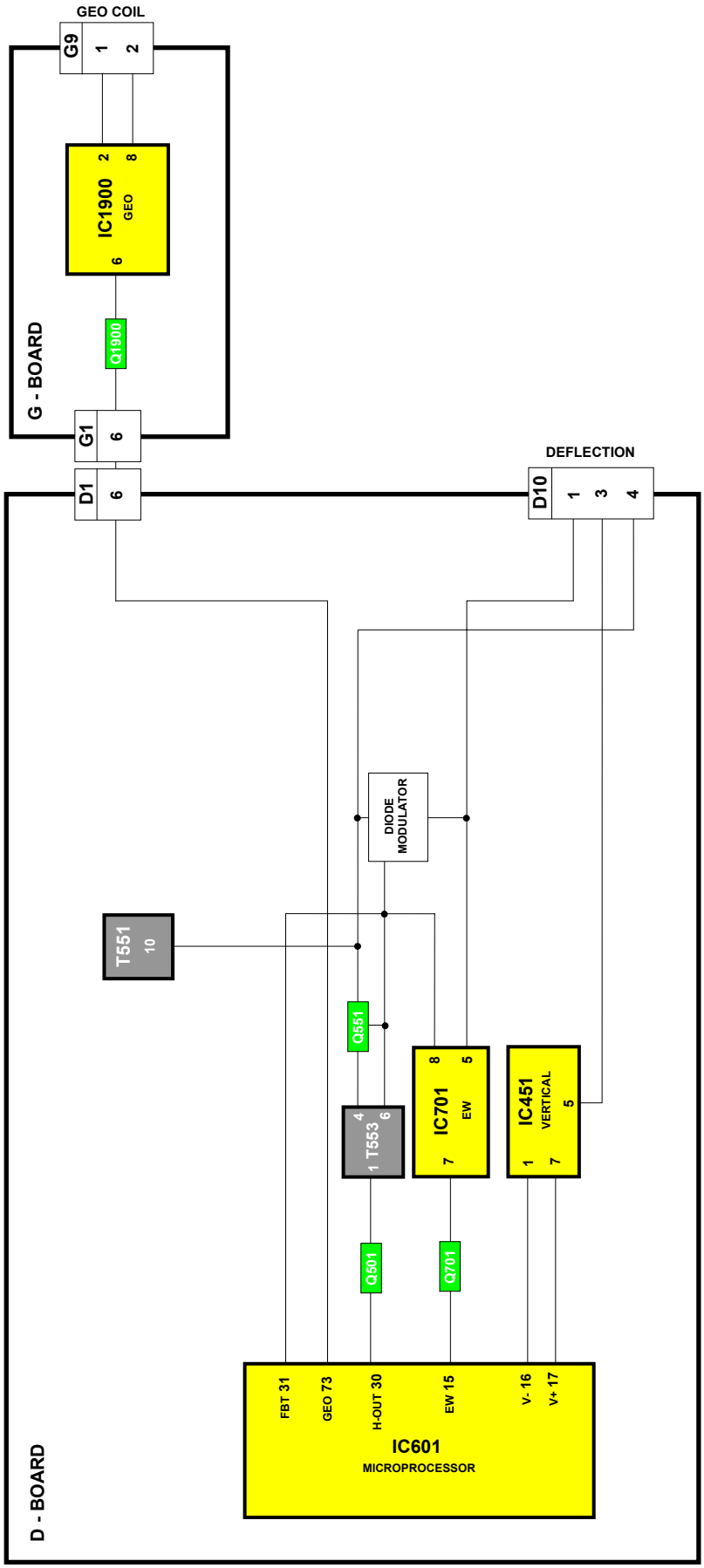

PARTS LOCATION

NOTE:
The numbers on the exploded view below refer to the exploded view section of the Replacement Parts List.

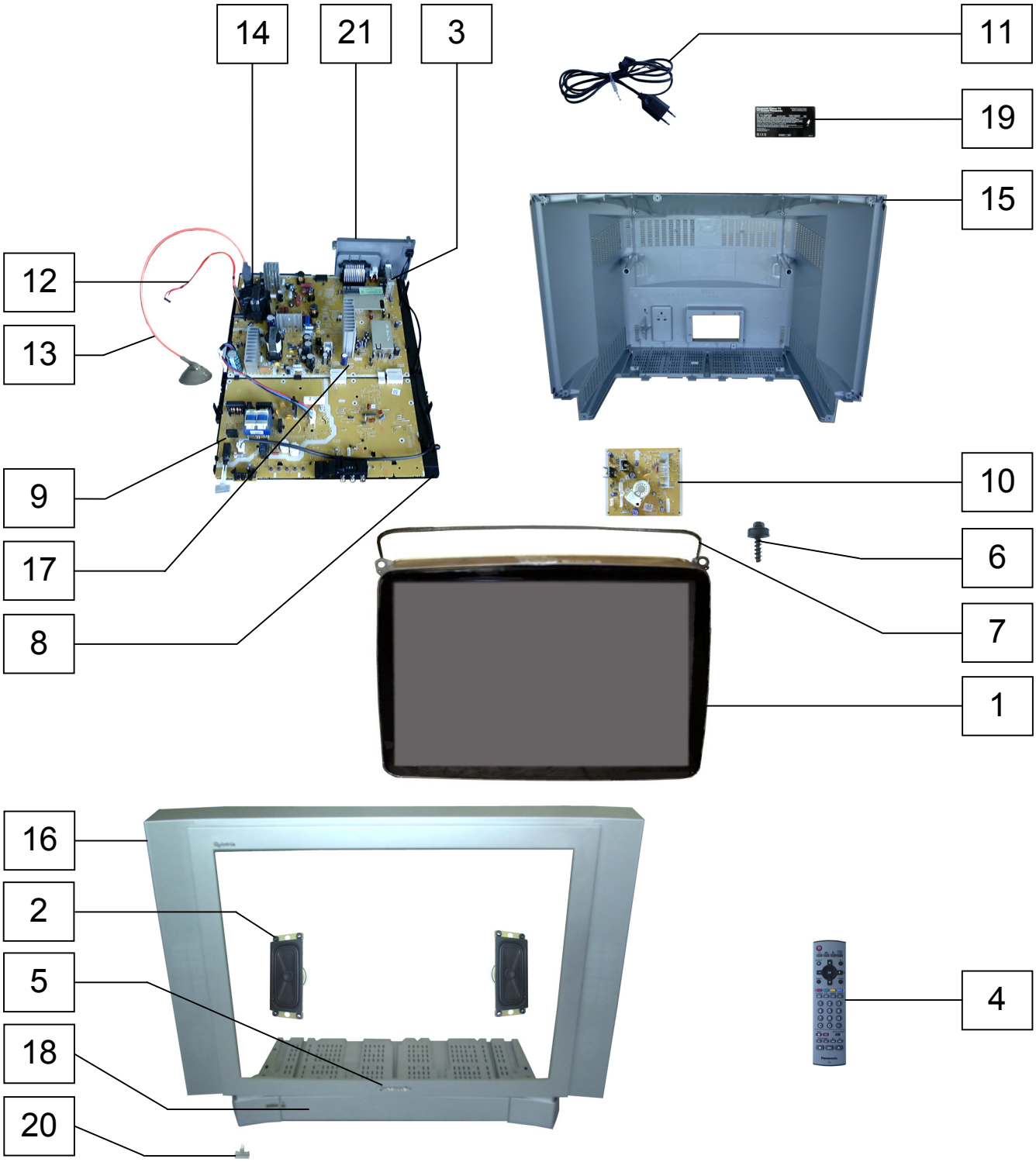

REPLACEMENT PARTS LIST

Important Safety Notice

Components Identified by ⚠ mark have special characteristics important for safety.
* When replacing any of these components, use only manufacturers specified parts.
In case of ordering these spare parts, please always add the complete Model-Type number to your order.

Cct Ref	Parts Number	Description	
COMMON PARTS			
EXPLODED VIEW			
1	A68ELO50X21	C.R.T.	⚠
2	EASG12S502A2	SPEAKER	
3	ENV57DA0G3	TUNER	
4	EUR7628010	REMOTE CONTROL	
5	TBMA060	PANASONIC BADGE	
6	THT1062	CRT FIXING SCREW	
7	TLK8E05176	DEGAUSS COIL	⚠
8	TMX0E402-1	CHASSIS FRAME	
9	TNP0EG003AA	G P.C.B.	⚠
10	TNP0EL003AA	L P.C.B.	⚠
11	TXASX01CKCG1	AC CORD	⚠
12	TXJ/FC0DCNG	FOCUS LEAD ASSY	⚠
13	ZTBZAD550A	ANODE LEAD	⚠
14	ZTFN65009A	F.B.T.	⚠
MISCELLANEOUS COMPONENTS			
.	R6RC/2P	BATTERY	
.	TBLG3019	SET FOOT (FRONT)	
.	TBLG3020	SET FOOT (REAR)	
.	TBM0E0034	PRESET LABEL	
.	TBM0E0198	PRESET LABEL	
.	TEK6935	LID SWITCH	
.	TKK0E9507	CRT SUPPORT BRACKET R	
.	TKK0E9508	CRT SUPPORT BRACKET L	
.	TKP0E10701	IR WINDOW	
.	TLK0E9015	ROTATION COIL	
.	TMW8E050-2	LED HOLDER	
.	TPC0E41401B	CARTON	
.	TPD0E0013	BOTTOM CUSHION	
.	TPD0E0014	TOP CUSHION	
I.C.s			
IC351	TDA6108JF	RGB OUTPUT	
IC451	LA78045	VERTICAL OUTPUT	
IC701	TEA2031A	E/W CORRECTION	
IC801	STRW6754LF06	POWER SUPPLY	
IC802	SE140NLF4	ERROR IC	
IC851	STV8131	IC FOR POWER SUPPLY	
IC880	BA05T	REGULATOR	
IC1062	RPM-6937	LED RECEIVER	
IC1201	C0CBABC00037	3.3V REGULATOR	
IC1900	LA6515	EARTH CORRECTION	
IC2101	MSP3410GAB83	AUDIO PROCESSOR	
IC2301	LA42072-E	AUDIO AMPLIFIER	

Cct Ref	Parts Number	Description	
FUSES			
F840-L	EYF52BC	FUSE HOLDER	
F840-R	EYF52BC	FUSE HOLDER	
F840	S5055AC	FUSE	⚠
F846	TSF19632	FS LINK	⚠
F847	TSF19252	FS LINK	⚠
F883	TSF19632	FS LINK	⚠
DIODES			
D001	MTZJT-772.2A	DIODE	
D002	MTZJT-7716A	DIODE	
D003	MTZJT-7716A	DIODE	
D104	1SS265T-77	DIODE	
D202	1SS265T-77	DIODE	
D354	1SR124-4AT82	DIODE	
D355	1SR124-4AT82	DIODE	
D356	1SR124-4AT82	DIODE	
D361	1SS133T-77	DIODE	
D362	1SS133T-77	DIODE	
D363	1SS133T-77	DIODE	
D364	1SS133T-77	DIODE	
D402	1SR124-4AT82	DIODE	
D507	1SS355TE-17	DIODE	
D511	MAZ4108J0F	DIODE	
D512	1SR124-4AT82	DIODE	
D513	EU02V0	DIODE	
D515	EU02V0	DIODE	
D516	EU02V0	DIODE	
D520	MA3X152K0L	DIODE	
D550	AK04V0	DIODE	
D551	MAZ30470HL	DIODE	
D552	EU02V0	DIODE	
D555	MA3X152K0L	DIODE	
D556	ERD07-15L7	DIODE	
D557	RU3LFA1	DIODE	
D558	1SS133T-77	DIODE	
D580	MTZJT-7733B	DIODE	
D581	MA3X152K0L	DIODE	
D582	MA3X152K0L	DIODE	
D583	MA3X152E0L	DIODE	
D602	1SS355TE-17	DIODE	
D603	1SS355TE-17	DIODE	
D701	1SS133T-77	DIODE	
D702	MTZJT-775.6C	DIODE	
D704	MTZJT-773.3A	DIODE	
D705	MTZJT-776.2A	DIODE	
D707	1SS355TE-17	DIODE	
D801	EU02V0	DIODE	
D802	EU02V0	DIODE	
D803	RBV-608LF-B	DIODE	
D810	SARS01V0	DIODE	
D817	1SR124-4AT82	DIODE	

Cct Ref	Parts Number	Description	
D820	MAZ20820A0LS	DIODE	
D823	1SS133T-77	DIODE	
D824	1SS133T-77	DIODE	
D825	MTZJT-776.8C	DIODE	
D836	232266296706	THERMISTOR	⚠
D837	232266296706	THERMISTOR	⚠
D841	1SS355TE-17	DIODE	
D848	RK46LF-M1	DIODE	
D849	1SR124-4AT82	DIODE	
D859	MTZJT-7727D	DIODE	
D862	MTZJT-772.0B	DIODE	
D863	1SR124-4AT82	DIODE	
D865	MTZJT-773.6A	DIODE	
D866	RU4BLF-L1	DIODE	
D867	1SR124-4AT82	DIODE	
D868	1SR124-4AT82	DIODE	
D869	1SR124-4AT82	DIODE	
D870	AU02AV0	DIODE	
D872	RU3LFA1	DIODE	
D883	RU2BLFC4	DIODE	
D885	1SS355TE-17	DIODE	
D1056	MTZJT-775.1C	DIODE	
D1061	LS5469-GK	LED	
D1132	MTZJT-775.6A	DIODE	
D1140	MTZJT-775.6B	DIODE	
D2101	MA723TA5	DIODE	
D2102	MA723TA5	DIODE	
D2103	MA723TA5	DIODE	
D2104	MA723TA5	DIODE	
D2105	MTZJT-773.9A	DIODE	
D2303	MA723TA5	DIODE	
D2304	MA723TA5	DIODE	
D2380	MA3X152K0L	DIODE	
D2381	MA3X152K0L	DIODE	
D2382	MA3X152K0L	DIODE	
D3141	MTZJT-778.2C	DIODE	
D3142	MTZJT-778.2C	DIODE	
IC860	SFH617A-20P6	PHOTO COUPLER	⚠
TRANSISTORS			
Q202	BC847B	TRANSISTOR	
Q354	BC857B	TRANSISTOR	
Q501	2SC4212H00LB	TRANSISTOR	
Q520	2SB0792A0L	TRANSISTOR	
Q551	2SD2553LB324	TRANSISTOR	
Q580	2SC24060RL	TRANSISTOR	
Q581	BC857B	TRANSISTOR	
Q601	BC857B	TRANSISTOR	
Q602	2SC24060RL	TRANSISTOR	
Q603	BC847B	TRANSISTOR	
Q604	BC847B	TRANSISTOR	
Q605	SN7002	TRANSISTOR	
Q701	BC857B	TRANSISTOR	
Q841	2SC24060RL	TRANSISTOR	
Q846	2SA06840R	TRANSISTOR	
Q847	BC557B/126	TRANSISTOR	
Q850	2SA1668LF603	TRANSISTOR	
Q852	2SC24060RL	TRANSISTOR	
Q857	2SC54190QA	TRANSISTOR	
Q901	BC847B	TRANSISTOR	
Q902	BC847B	TRANSISTOR	
Q903	BC857B	TRANSISTOR	
Q904	2SC3944AR0LB	TRANSISTOR	
Q905	2SA1535AR0LB	TRANSISTOR	
Q1100	BC847B	TRANSISTOR	
Q1101	BC847B	TRANSISTOR	
Q1102	BC847B	TRANSISTOR	

Cct Ref	Parts Number	Description	
Q1103	BC847B	TRANSISTOR	
Q1104	BC847B	TRANSISTOR	
Q1105	BC847B	TRANSISTOR	
Q1106	BC847B	TRANSISTOR	
Q1107	BC847B	TRANSISTOR	
Q1900	BC847B	TRANSISTOR	
Q2003	BC847B	TRANSISTOR	
Q2101	BC857B	TRANSISTOR	
Q2102	BC857B	TRANSISTOR	
Q2103	BC857B	TRANSISTOR	
Q2301	BC847B	TRANSISTOR	
Q2302	BC857B	TRANSISTOR	
Q2303	BC847B	TRANSISTOR	
Q2304	BC857B	TRANSISTOR	
Q2305	BC857B	TRANSISTOR	
Q2306	BC847B	TRANSISTOR	
Q2380	BC847B	TRANSISTOR	
Q2381	BC857B	TRANSISTOR	
Q2385	BC847B	TRANSISTOR	
TRANSFORMERS			
T553	ETH19Y210AZ	TRANSFORMER	
T801	ETS39AG3X6AC	TRANSFORMER	⚠
COILS			
J203	EXCELSA35T	COIL	
JSD102	EXCELDR35V	COIL	
JSD503	EXCELSA35V	COIL	
L001	ELESNR22KA	COIL	
L002	TALV35VB100K	COIL	
L104	TLT047K991R	COIL	
L181	ELESN100KA	COIL	
L501	EXCELSA35T	COIL	
L502	ELEIE180KA	COIL	
L503	ELEIE180KA	COIL	
L516	EXCELSA35T	COIL	
L553	ELC18B801L	COIL	
L554	ELC08D682E	COIL	
L557	ELH5L6110	COIL	
L559	ELC18B101L	COIL	
L607	EXCELDR35V	COIL	
L705	ELC10D822E	COIL	
L804	ETQR42T005A	COIL	
L820	EXCELSA39E	COIL	
L841	EXCELSA35T	COIL	
L843	EXCELSA35T	COIL	
L844	EXCELSA35T	COIL	
L847	EXCELSA35T	COIL	
L848	EXCELSA35T	COIL	
L849	EXCELSA35T	COIL	
L865	EXCELSA39E	COIL	
L866	EXCELSA35B	COIL	
L867	ELEIE470KA	COIL	
L868	EXCELSA39E	COIL	
L869	EXCELDR35V	COIL	
L871	ELESN1R5KA	COIL	
L872	ELESN1R5KA	COIL	
L875	EXCELDR35V	COIL	
L892	EXCELSA35T	COIL	
L893	EXCELSA35T	COIL	
L900	EXCELSA24T	COIL	
L901	EXCELSA24T	COIL	
L902	EXCELSA24T	COIL	
L1051	EXCELSA35T	COIL	
L1061	TLT331K991R	COIL	
L1900	EXCELDR25V	COIL	
L2001	TALV35VB4R7K	COIL	
L2005	TALV35VB6R8K	COIL	

Cct Ref	Parts Number	Description			
L2101	TLTACT100K	COIL			
L2103	EXCELSA35T	COIL			
L2104	TLTACT4R7K	COIL			
L3001	ELEMV1R5MA	COIL			
L3002	ELEMV1R5MA	COIL			
L3003	ELEMV1R5MA	COIL			
L3004	ELEMV1R5MA	COIL			
L3142	ELEBR6R8KA	COIL			
L3143	ELEBR6R8KA	COIL			
L3146	EXCELSA35T	COIL			
FILTERS					
DL2301	EXCEMT103DT	FILTER			
DL2302	EXCEMT103DT	FILTER			
L831	ELF20N013A	LINE FILTER			⚠
L832	ELF18N012A	LINE FILTER			⚠
X102	K3953-M100	SAW FILTER			
X180	EFCT5M7MW5N	CERAMIC FILTER			
X201	K9659D	FILTER			
XF101	EFCVA4045A4	CERAMIC FILTER			
CRYSTALS					
X601	TSSA010	CRYSTAL			
X2101	4730007158	CRYSTAL			
RESISTORS					
C117	ERJ6GEY0R00V	S.M.CARB	0.1W		0 Ω
C124	ERJ6GEY0R00V	S.M.CARB	0.1W		0 Ω
C685	ERJ6GEY0R00V	S.M.CARB	0.1W		0 Ω
C686	ERJ6GEY0R00V	S.M.CARB	0.1W		0 Ω
C2035	ERJ6GEY0R00V	S.M.CARB	0.1W		0 Ω
JA1	ERJ6GEY0R00V	S.M.CARB	0.1W		0 Ω
JA2	ERJ6GEY0R00V	S.M.CARB	0.1W		0 Ω
JA3	ERJ6GEY0R00V	S.M.CARB	0.1W		0 Ω
JA4	ERJ6GEY0R00V	S.M.CARB	0.1W		0 Ω
JA5	ERJ6GEY0R00V	S.M.CARB	0.1W		0 Ω
JA7	ERJ6GEY0R00V	S.M.CARB	0.1W		0 Ω
JA8	ERJ8GEY0R00V	S.M.CARB	0.125		0 Ω
JA9	ERJ8GEY0R00V	S.M.CARB	0.125		0 Ω
JA10	ERJ8GEY0R00V	S.M.CARB	0.125		0 Ω
JA11	ERJ8GEY0R00V	S.M.CARB	0.125		0 Ω
JA12	ERJ8GEY0R00V	S.M.CARB	0.125		0 Ω
JA13	ERJ6GEY0R00V	S.M.CARB	0.1W		0 Ω
JA14	ERJ8GEY0R00V	S.M.CARB	0.125		0 Ω
JA15	ERJ6GEY0R00V	S.M.CARB	0.1W		0 Ω
JSD100	ERJ6GEY0R00V	S.M.CARB	0.1W		0 Ω
JSD101	ERJ6GEY0R00V	S.M.CARB	0.1W		0 Ω
JSD104	ERJ6GEY0R00V	S.M.CARB	0.1W		0 Ω
JSD211	ERJ6GEY0R00V	S.M.CARB	0.1W		0 Ω
JSD609	ERJ6GEY0R00V	S.M.CARB	0.1W		0 Ω
JSD2113	ERJ6GEY0R00V	S.M.CARB	0.1W		0 Ω
JSD2114	ERJ6GEY0R00V	S.M.CARB	0.1W		0 Ω
JSD2133	ERJ6GEY0R00V	S.M.CARB	0.1W		0 Ω
JSD2134	ERJ6GEY0R00V	S.M.CARB	0.1W		0 Ω
JSD2305	ERJ6GEY0R00V	S.M.CARB	0.1W		0 Ω
JSD2306	ERJ6GEY0R00V	S.M.CARB	0.1W		0 Ω
JSD2308	ERJ6GEY0R00V	S.M.CARB	0.1W		0 Ω
JSD2311	ERJ6GEY0R00V	S.M.CARB	0.1W		0 Ω
JSD2312	ERJ6GEY0R00V	S.M.CARB	0.1W		0 Ω
JSG842	ERJ6GEY0R00V	S.M.CARB	0.1W		0 Ω
JSG846	ERJ6GEY0R00V	S.M.CARB	0.1W		0 Ω
JSG1061	ERJ6GEY0R00V	S.M.CARB	0.1W		0 Ω
JSG1063	ERJ6GEY0R00V	S.M.CARB	0.1W		0 Ω
JSG1901	ERJ6GEY0R00V	S.M.CARB	0.1W		0 Ω
JSG3132	ERJ6GEY0R00V	S.M.CARB	0.1W		0 Ω
JSG3133	ERJ6GEY0R00V	S.M.CARB	0.1W		0 Ω
JSG3142	ERJ6GEY0R00V	S.M.CARB	0.1W		0 Ω
JSG3143	ERJ6GEY0R00V	S.M.CARB	0.1W		0 Ω

Cct Ref	Parts Number	Description			
JSG3144	ERJ6GEY0R00V	S.M.CARB	0.1W		0 Ω
L620	ERJ6GEY0R00V	S.M.CARB	0.1W		0 Ω
R001	ERJ6GEYJ101V	S.M.CARB	0.1W	5%	100 Ω
R002	ERJ6GEYJ101V	S.M.CARB	0.1W	5%	100 Ω
R003	ERJ6GEYJ153V	S.M.CARB	0.1W	5%	15K Ω
R004	ERG2SJS273H	METAL	2W	5%	27K Ω
R005	ERJ6GEYJ393V	S.M.CARB	0.1W	5%	39K Ω
R006	ERJ6GEYJ153V	S.M.CARB	0.1W	5%	15K Ω
R007	ERJ6GEYJ302V	S.M.CARB	0.1W	5%	3K Ω
R008	ERJ6GEYJ681V	S.M.CARB	0.1W	5%	680 Ω
R113	ERJ6GEYJ102V	S.M.CARB	0.1W	5%	1K Ω
R114	ERJ6GEYJ102V	S.M.CARB	0.1W	5%	1K Ω
R115	ERJ6GEYJ181V	S.M.CARB	0.1W	5%	180 Ω
R117	ERJ6GEY0R00V	S.M.CARB	0.1W		0 Ω
R182	ERDS2TJ221T	CARBON	0.5W	5%	220 Ω
R190	ERJ6GEYJ391V	S.M.CARB	0.1W	5%	390 Ω
R202	ERJ6GEYJ473V	S.M.CARB	0.1W	5%	47K Ω
R203	ERJ6GEYJ473V	S.M.CARB	0.1W	5%	47K Ω
R205	ERJ6GEYJ473V	S.M.CARB	0.1W	5%	47K Ω
R207	ERJ6GEYJ102V	S.M.CARB	0.1W	5%	1K Ω
R209	ERJ6GEYJ223V	S.M.CARB	0.1W	5%	22K Ω
R217	ERJ6GEYJ103Z	S.M.CARB	0.125	5%	10K Ω
R253	ERJ6GEYJ103V	S.M.CARB	0.1W	5%	10K Ω
R255	ERJ6GEYJ103V	S.M.CARB	0.1W	5%	10K Ω
R351	ERJ6GEYJ101V	S.M.CARB	0.1W	5%	100 Ω
R352	ERJ6GEYJ101V	S.M.CARB	0.1W	5%	100 Ω
R353	ERJ6GEYJ101V	S.M.CARB	0.1W	5%	100 Ω
R354	ERJ6GEYJ272V	S.M.CARB	0.1W	5%	2K7 Ω
R355	ERJ6GEYJ272V	S.M.CARB	0.1W	5%	2K7 Ω
R356	ERJ6GEYJ272V	S.M.CARB	0.1W	5%	2K7 Ω
R366	ERDS1TJ152T	CARBON	0.5W	5%	1K5 Ω
R367	ERDS1TJ152T	CARBON	0.5W	5%	1K5 Ω
R368	ERDS1TJ152T	CARBON	0.5W	5%	1K5 Ω
R372	ERQ12AJ121P	FUSIBLE	0.5W	5%	120 Ω
R374	ERDS2TJ274T	CARBON	0.25W	5%	270K Ω
R375	ERJ6GEYJ684V	S.M.CARB	0.1W	5%	680K Ω
R376	ERJ6GEYJ183V	S.M.CARB	0.1W	5%	18K Ω
R381	ERJ6GEYJ103V	S.M.CARB	0.1W	5%	10K Ω
R385	ERJ6GEY0R00V	S.M.CARB	0.1W		0 Ω
R401	ERDS2TJ104T	CARBON	2W	5%	100K Ω
R403	ERJ6GEYJ332V	S.M.CARB	0.1W	5%	3K3 Ω
R404	ERJ6GEYJ202V	S.M.CARB	0.1W	5%	2K Ω
R405	ERJ6GEYJ332V	S.M.CARB	0.1W	5%	3K3 Ω
R406	ERDS2TJ1R5T	CARBON	0.25W	5%	1R5 Ω
R407	ERDS1TJ221T	CARBON	0.5W	5%	220 Ω
R413	ERJ6GEYJ202V	S.M.CARB	0.1W	5%	2K Ω
R416	CR251-05T1R8	WOUND	1W	5%	1.8 Ω
R417	CR251-05T1R5	WOUND	1W	5%	1.5 Ω
R502	ERJ6GEYJ182V	S.M.CARB	0.1W	5%	1K8 Ω
R504	ERG2SJ332E	METAL	2W	5%	3K3 Ω
R507	ERJ6GEYJ561V	S.M.CARB	0.1W	5%	560 Ω
R508	ERG3FJ821H	METAL	3W	5%	820 Ω
R509	ERG3FJ681H	METAL	3W	5%	680 Ω
R511	ERJ6ENF1201V	S.M.CARB	0.1W	1%	1K2 Ω
R512	ERJ6GEYJ182V	S.M.CARB	0.1W	5%	1K8 Ω
R513	ERQ14AJ100P	METAL	0.25	5%	10 Ω
R514	ERX12SJR56P	METAL	0.5W	5%	0.56 Ω
R515	ERX12SJR56P	METAL	0.5W	5%	0.56 Ω
R516	ERQ1RJW1R0E	METAL	1W	5%	1 Ω
R520	ERX1SJ1R0E	METAL	1W	5%	1 Ω
R521	ERX1SJ1R0E	METAL	1W	5%	1 Ω
R522	ERJ6GEYJ123V	S.M.CARB	0.1W	5%	12K Ω
R523	ERJ6GEYJ103V	S.M.CARB	0.1W	5%	10K Ω
R524	ERJ6GEYJ104V	S.M.CARB	0.1W	5%	100K Ω
R525	ERJ6GEYJ392V	S.M.CARB	0.1W	5%	3K9 Ω
R550	ERX2SJR47E	METAL	2W	5%	0.47 Ω

Cct Ref	Parts Number	Description			
R551	ERQ12AJ101P	FUSIBLE	0.5W	5%	100 Ω
R552	ERG1SJ102P	METAL	1W	5%	1K Ω
R553	ERJ6GEYJ222V	S.M.CARB	0.1W	5%	2K2 Ω
R555	ERQ14AJ2R0E	METAL	0.25W	5%	2 Ω
R556	ERO50PHF5603	S.M.CARB	0.5W	1%	560K Ω
R557	ERO50PHF1133	S.M.CARB	0.5W	1%	113K Ω
R558	ERDS2TJ223T	CARBON	0.25W	5%	22K Ω
R559	ERQ12HKR56P	FUSIBLE	0.5W	10%	R56 Ω
R567	ERG1SJ102P	METAL	1W	5%	1K Ω
R580	ERJ6GEYJ392V	S.M.CARB	0.1W	5%	3K9 Ω
R581	ERJ6GEYJ183V	S.M.CARB	0.1W	5%	18K Ω
R582	ERJ6GEYJ154V	S.M.CARB	0.1W	5%	150K Ω
R583	ERJ6GEYJ274V	S.M.CARB	0.1W	5%	270K Ω
R584	ERJ6GEYJ563V	S.M.CARB	0.1W	5%	56K Ω
R585	ERJ6GEYJ272V	S.M.CARB	0.1W	5%	2K7 Ω
R586	ERJ6GEYJ103V	S.M.CARB	0.1W	5%	10K Ω
R587	ERJ6GEYJ823V	S.M.CARB	0.1W	5%	82K Ω
R588	ERJ6GEYJ104V	S.M.CARB	0.1W	5%	100K Ω
R589	ERJ6GEYJ103V	S.M.CARB	0.1W	5%	10K Ω
R590	ERJ6GEYJ333V	S.M.CARB	0.1W	5%	33K Ω
R591	ERJ6GEYJ103V	S.M.CARB	0.1W	5%	10K Ω
R592	ERJ6GEYJ222V	S.M.CARB	0.1W	5%	2K2 Ω
R593	ERJ6GEYJ103V	S.M.CARB	0.1W	5%	10K Ω
R594	ERJ6GEYJ104V	S.M.CARB	0.1W	5%	100K Ω
R601	ERJ6GEYJ153V	S.M.CARB	0.1W	5%	15K Ω
R602	ERJ6GEY0R00V	S.M.CARB	0.1W		0 Ω
R603	ERJ6GEYJ393V	S.M.CARB	0.1W	5%	39K Ω
R604	ERJ6GEYJ101V	S.M.CARB	0.1W	5%	100 Ω
R605	ERJ6GEYJ101V	S.M.CARB	0.1W	5%	100 Ω
R606	ERJ6GEYJ101V	S.M.CARB	0.1W	5%	100 Ω
R607	ERJ6GEYJ103V	S.M.CARB	0.1W	5%	10K Ω
R608	ERJ6GEYJ272V	S.M.CARB	0.1W	5%	2K7 Ω
R611	ERJ6GEYJ331V	S.M.CARB	0.1W	5%	330 Ω
R612	ERJ6GEYJ102V	S.M.CARB	0.1W	5%	1K Ω
R613	ERJ6GEYJ220V	S.M.CARB	0.1W	5%	22 Ω
R616	ERJ6GEYJ4R7V	S.M.CARB	0.125	5%	4.7 Ω
R617	ERJ6GEYJ181V	S.M.CARB	0.1W	5%	180 Ω
R618	ERJ6GEYJ4R7V	S.M.CARB	0.125	5%	4.7 Ω
R619	ERJ6GEYJ121V	S.M.CARB	0.1W	5%	120 Ω
R620	ERJ6GEYJ121V	S.M.CARB	0.1W	5%	120 Ω
R621	ERJ6GEYJ101V	S.M.CARB	0.1W	5%	100 Ω
R622	ERJ6GEYJ102V	S.M.CARB	0.1W	5%	1K Ω
R623	ERJ6GEYJ331V	S.M.CARB	0.1W	5%	330 Ω
R624	ERDS2TJ750T	CARBON	0.25W	5%	75 Ω
R640	ERJ6GEYJ822V	S.M.CARB	0.1W	5%	8K2 Ω
R651	ERDS2TJ101T	CARBON	0.25W	5%	100 Ω
R652	ERDS2TJ101T	CARBON	0.25W	5%	100 Ω
R653	ERDS2TJ101T	CARBON	0.25W	5%	100 Ω
R654	ERJ6GEYJ750V	S.M.CARB	0.1W	5%	75 Ω
R655	ERDS2TJ750T	CARBON	0.25W	5%	75 Ω
R656	ERDS2TJ750T	CARBON	0.25W	5%	75 Ω
R657	ERJ6GEYJ470V	S.M.CARB	0.1W	5%	47 Ω
R658	ERJ6GEYJ750V	S.M.CARB	0.1W	5%	75 Ω
R659	ERJ6GEYJ101V	S.M.CARB	0.1W	5%	100 Ω
R672	ERJ6GEYJ222V	S.M.CARB	0.1W	5%	2K2 Ω
R682	ERJ6GEYJ101V	S.M.CARB	0.1W	5%	100 Ω
R683	ERJ6GEYJ561V	S.M.CARB	0.1W	5%	560 Ω
R684	ERJ6GEYJ102V	S.M.CARB	0.1W	5%	1K Ω
R685	ERDS2TJ101T	CARBON	0.25W	5%	100 Ω
R688	ERJ6GEYJ750V	S.M.CARB	0.1W	5%	75 Ω
R689	ERJ6GEYJ750V	S.M.CARB	0.1W	5%	75 Ω
R690	ERJ6GEYJ750V	S.M.CARB	0.1W	5%	75 Ω
R691	ERJ6GEY0R00V	S.M.CARB	0.1W		0 Ω
R701	ERQ12AJ330E	METAL	0.5W	5%	33 Ω
R703	ERG2SJ821E	METAL	2W	5%	820 Ω
R704	ERJ6GEYJ563V	S.M.CARB	0.1W	5%	56K Ω

Cct Ref	Parts Number	Description			
R705	ERJ6GEYJ104V	S.M.CARB	0.1W	5%	100K Ω
R706	ERJ6GEYJ432V	S.M.CARB	0.1W	5%	4K3 Ω
R707	ERJ6GEYJ331V	S.M.CARB	0.1W	5%	330 Ω
R708	ERJ6GEYJ393V	S.M.CARB	0.1W	5%	39K Ω
R709	ERJ6GEYJ393V	S.M.CARB	0.1W	5%	39K Ω
R710	ERJ6GEYJ273V	S.M.CARB	0.1W	5%	27K Ω
R711	ERG1SJ101E	METAL	1W	5%	100 Ω
R712	ERJ6GEYJ622V	S.M.CARB	0.1W	5%	6K2 Ω
R713	ERG3FJ150H	MEETAL	3W	5%	15 Ω
R714	ERJ6GEYJ101V	S.M.CARB	0.1W	5%	100 Ω
R715	ERJ6GEYJ473V	S.M.CARB	0.1W	5%	47K Ω
R716	ERG3FJ561H	METAL	3W	5%	560 Ω
R721	ERJ6GEYJ752V	S.M.CARB	0.1W	5%	7K5 Ω
R801	ERF7ZK2R2	WOUND	7W	10%	2R2 Ω
R806	ERC12ZGK105C	SOLID	0.5W	10%	1M Ω ⚠
R810	ERG2SJS220H	METAL	2W	5%	22 Ω
R811	ERG2SJS104H	METAL	2W	5%	100K Ω
R817	ERG1SJ100P	METAL	1W	5%	10 Ω
R820	ERX12SJR47E	METAL	0.5W	5%	0.47 Ω
R821	ERX12SJR56E	METAL	0.5W	5%	0.56 Ω
R822	ERDS1TJ124T	CARBON	0.5W	5%	120K Ω
R823	ERDS1TJ124T	CARBON	0.5W	5%	120K Ω
R824	ERDS2TJ272T	CARBON	0.25W	5%	2K7 Ω
R825	ERDS2TJ102T	CARBON	0.25W	5%	1K Ω
R830	ERDS2TJ221T	CARBON	0.5W	5%	220 Ω
R832	ERDS1TJ224T	CARBON	0.5W	5%	220K Ω
R840	ERD75TAJ825	CARBON	1W	5%	8M2 Ω ⚠
R843	ERJ6GEYJ470V	S.M.CARB	0.1W	5%	47 Ω
R844	ERJ6GEYJ472V	S.M.CARB	0.1W	5%	4K7 Ω
R845	ERJ6GEYJ472V	S.M.CARB	0.1W	5%	4K7 Ω
R850	ERQ1ABJ180E	FUSIBLE	1W	5%	18 Ω
R851	ERDS2TJ104T	CARBON	2W	5%	100K Ω
R852	ERDS2TJ472T	CARBON	0.25W	5%	4K7 Ω
R853	ERG3FJ101H	METAL	3W	5%	100 Ω
R854	ERG3FJ101H	METAL	3W	5%	100 Ω
R856	ERDS1TJ2R2T	CARBON	0.5W	5%	2R2 Ω
R857	ERDS1TJ103T	CARBON	0.5W	5%	10K Ω
R858	ERDS2TJ202T	CARBON	0.25W	5%	2K Ω
R859	ERDS2TJ101T	CARBON	0.25W	5%	100 Ω
R862	ERJ6GEYJ182V	S.M.CARB	0.1W	5%	1K8 Ω
R863	ERDS1TJ100T	CARBON	0.5W	5%	10 Ω
R864	ERJ6GEYJ103V	S.M.CARB	0.1W	5%	10K Ω
R866	ERJ6GEYJ472V	S.M.CARB	0.1W	5%	4K7 Ω
R867	ERDS1TJ102T	CARBON	0.5W	5%	1K Ω
R871	ERJ6GEYJ103V	S.M.CARB	0.1W	5%	10K Ω
R874	ERJ6GEYJ333V	S.M.CARB	0.1W	5%	33K Ω
R901	ERJ6GEYJ153V	S.M.CARB	0.1W	5%	15K Ω
R902	ERJ6GEYJ822V	S.M.CARB	0.1W	5%	8K2 Ω
R903	ERJ6GEYJ431V	S.M.CARB	0.125	5%	430 Ω
R904	ERJ6GEYJ221V	S.M.CARB	0.1W	5%	220 Ω
R905	ERJ6GEYJ271V	S.M.CARB	0.1W	5%	270 Ω
R906	ERJ6GEYJ271V	S.M.CARB	0.1W	5%	270 Ω
R908	ERDS2TJ223T	CARBON	0.25W	5%	22K Ω
R909	ERDS2TJ223T	CARBON	0.25W	5%	22K Ω
R910	ERDS2TJ471T	CARBON	0.5W	5%	470 Ω
R911	ERDS1FJ390T	CARBON	0.5W	5%	39 Ω
R912	ERDS2TJ2R7T	CARBON	0.25W	5%	2.7 Ω
R913	ERDS2TJ2R7T	CARBON	0.25W	5%	2.7 Ω
R914	ERDS1FJ390T	CARBON	0.5W	5%	39 Ω
R915	ERDS1FVJ471T	CARBON	0.5W	5%	470 Ω
R917	ERDS2TJ471T	CARBON	0.5W	5%	470 Ω
R918	ERQ1CJP331S	FUSIBLE	1W	5%	330 Ω
R919	ERJ6GEY0R00V	S.M.CARB	0.1W		0 Ω
R920	ERJ6GEYJ102V	S.M.CARB	0.1W	5%	1K Ω
R1026	ERJ6ENF1651V	S.M.CARB	0.1W	1%	1K65 Ω
R1027	ERJ6ENF2151V	S.M.CARB	0.1W	1%	2K15 Ω

Cct Ref	Parts Number	Description			
R1028	ERJ6ENF3091V	S.M.CARB	0.1W	1%	3K09 Ω
R1029	ERJ6ENF4421V	S.M.CARB	0.1W	1%	4K42 Ω
R1031	ERJ6ENF1871V	S.M.CARB	0.1W	1%	1K87 Ω
R1061	ERJ6GEYJ222V	S.M.CARB	0.1W	5%	2K2 Ω
R1064	ERJ6GEYJ102V	S.M.CARB	0.1W	5%	1K Ω
R1101	ERJ6GEYJ103V	S.M.CARB	0.1W	5%	10K Ω
R1102	ERJ6GEYJ103V	S.M.CARB	0.1W	5%	10K Ω
R1103	ERDS2TJ103T	CARBON	0.25W	5%	10K Ω
R1104	ERJ6GEYJ103V	S.M.CARB	0.1W	5%	10K Ω
R1105	ERJ6GEYJ103V	S.M.CARB	0.1W	5%	10K Ω
R1106	ERJ6GEYJ103V	S.M.CARB	0.1W	5%	10K Ω
R1107	ERJ6GEYJ101V	S.M.CARB	0.1W	5%	100 Ω
R1108	ERJ6GEYJ101V	S.M.CARB	0.1W	5%	100 Ω
R1109	ERJ6GEYJ101V	S.M.CARB	0.1W	5%	100 Ω
R1110	ERJ6GEYJ101V	S.M.CARB	0.1W	5%	100 Ω
R1111	ERJ6GEYJ103V	S.M.CARB	0.1W	5%	10K Ω
R1112	ERJ6GEYJ101V	S.M.CARB	0.1W	5%	100 Ω
R1113	ERJ6GEYJ101V	S.M.CARB	0.1W	5%	100 Ω
R1114	ERJ6GEYJ102V	S.M.CARB	0.1W	5%	1K Ω
R1115	ERJ6GEYJ101V	S.M.CARB	0.1W	5%	100 Ω
R1116	ERJ6GEYJ101V	S.M.CARB	0.1W	5%	100 Ω
R1117	ERJ6GEYJ101V	S.M.CARB	0.1W	5%	100 Ω
R1118	ERJ6GEYJ472V	S.M.CARB	0.1W	5%	4K7 Ω
R1119	ERJ6GEYJ472V	S.M.CARB	0.1W	5%	4K7 Ω
R1120	ERJ6GEYJ101V	S.M.CARB	0.1W	5%	100 Ω
R1121	ERJ6GEYJ101V	S.M.CARB	0.1W	5%	100 Ω
R1125	ERJ6GEYJ103V	S.M.CARB	0.1W	5%	10K Ω
R1126	ERJ6GEYJ101V	S.M.CARB	0.1W	5%	100 Ω
R1127	ERJ6GEYJ101V	S.M.CARB	0.1W	5%	100 Ω
R1128	ERJ6GEYJ272V	S.M.CARB	0.1W	5%	2K7 Ω
R1129	ERJ6GEYJ272V	S.M.CARB	0.1W	5%	2K7 Ω
R1130	ERJ6GEYJ123V	S.M.CARB	0.1W	5%	12K Ω
R1131	ERJ6GEYJ123V	S.M.CARB	0.1W	5%	12K Ω
R1140	ERJ6ENF1002V	S.M.CARB	0.1W	1%	10K Ω
R1141	ERJ6GEYJ562V	S.M.CARB	0.1W	5%	5K6 Ω
R1142	ERJ6GEYJ100V	S.M.CARB	0.1W	5%	10 Ω
R1168	ERJ6GEYJ473V	S.M.CARB	0.1W	5%	47K Ω
R1169	ERJ6GEYJ472V	S.M.CARB	0.1W	5%	4K7 Ω
R1170	ERDS2TJ223T	CARBON	0.25W	5%	22K Ω
R1171	ERJ6GEYJ224V	S.M.CARB	0.1W	5%	220K Ω
R1172	ERJ6GEYJ223V	S.M.CARB	0.1W	5%	22K Ω
R1173	ERJ6GEYJ104V	S.M.CARB	0.1W	5%	100K Ω
R1174	ERJ6GEYJ221V	S.M.CARB	0.1W	5%	220 Ω
R1175	ERJ6GEYJ225V	S.M.CARB	0.1W	5%	2M2 Ω
R1176	ERJ6GEYJ104V	S.M.CARB	0.1W	5%	100K Ω
R1901	ERJ6GEYJ123V	S.M.CARB	0.1W	5%	12K Ω
R1902	ERJ6GEYJ123V	S.M.CARB	0.1W	5%	12K Ω
R1903	ERJ6GEYJ153V	S.M.CARB	0.1W	5%	15K Ω
R1904	ERDS1TJ2R2T	CARBON	0.5W	5%	2R2 Ω
R1905	ERJ6GEYJ114V	S.M.CARB	0.1W	5%	110K Ω
R1906	ERJ6GEYJ104V	S.M.CARB	0.1W	5%	100K Ω
R1907	ERJ6GEYJ104V	S.M.CARB	0.1W	5%	100K Ω
R1908	ERJ6GEYJ103V	S.M.CARB	0.1W	5%	10K Ω
R1909	ERDS1TJ2R2T	CARBON	0.5W	5%	2R2 Ω
R1913	ERJ6GEYJ472V	S.M.CARB	0.1W	5%	4K7 Ω
R1914	ERG1SJ271E	METAL	1W	5%	270 Ω
R2010	ERJ6GEYJ471V	S.M.CARB	0.1W	5%	470 Ω
R2014	ERJ6GEYJ102V	S.M.CARB	0.1W	5%	1K Ω
R2015	ERJ6GEYJ102V	S.M.CARB	0.1W	5%	1K Ω
R2016	ERJ6GEYJ101V	S.M.CARB	0.1W	5%	100 Ω
R2019	ERJ6GEY0R00V	S.M.CARB	0.1W		0 Ω
R2020	ERJ6GEYJ562V	S.M.CARB	0.1W	5%	5K6 Ω
R2021	ERDS2TJ331T	CARBON	0.25W	5%	330 Ω
R2022	ERJ6GEYJ562V	S.M.CARB	0.1W	5%	5K6 Ω
R2101	ERJ6GEYJ103V	S.M.CARB	0.1W	5%	10K Ω
R2102	ERDS2TJ101T	CARBON	0.25W	5%	100 Ω

Cct Ref	Parts Number	Description			
R2103	ERDS2TJ101T	CARBON	0.25W	5%	100 Ω
R2108	ERJ6GEYJ101V	S.M.CARB	0.1W	5%	100 Ω
R2110	ERJ6GEY0R00V	S.M.CARB	0.1W		0 Ω
R2111	ERJ6GEYJ221V	S.M.CARB	0.1W	5%	220 Ω
R2112	ERJ6GEYJ102V	S.M.CARB	0.1W	5%	1K Ω
R2113	ERJ6GEYJ562V	S.M.CARB	0.1W	5%	5K6 Ω
R2114	ERJ6GEYJ101V	S.M.CARB	0.1W	5%	100 Ω
R2115	ERJ6GEYJ222V	S.M.CARB	0.1W	5%	2K2 Ω
R2116	ERJ6GEYJ101V	S.M.CARB	0.1W	5%	100 Ω
R2117	ERJ6GEYJ101V	S.M.CARB	0.1W	5%	100 Ω
R2118	ERJ6GEYJ222V	S.M.CARB	0.1W	5%	2K2 Ω
R2119	ERJ6GEYJ101V	S.M.CARB	0.1W	5%	100 Ω
R2120	ERJ6GEYJ222V	S.M.CARB	0.1W	5%	2K2 Ω
R2123	ERJ6GEYJ102V	S.M.CARB	0.1W	5%	1K Ω
R2133	ERJ6GEYJ153V	S.M.CARB	0.1W	5%	15K Ω
R2134	ERJ6GEYJ153V	S.M.CARB	0.1W	5%	15K Ω
R2300	ERJ6GEYJ473V	S.M.CARB	0.1W	5%	47K Ω
R2301	ERJ6GEYJ473V	S.M.CARB	0.1W	5%	47K Ω
R2304	ERDS2TJ471T	CARBON	0.5W	5%	470 Ω
R2305	ERJ6GEYJ102V	S.M.CARB	0.1W	5%	1K Ω
R2306	ERJ6GEYJ102V	S.M.CARB	0.1W	5%	1K Ω
R2307	ERJ6GEYJ272V	S.M.CARB	0.1W	5%	2K7 Ω
R2310	ERJ6GEYJ471V	S.M.CARB	0.1W	5%	470 Ω
R2311	ERJ6GEYJ102V	S.M.CARB	0.1W	5%	1K Ω
R2312	ERJ6GEYJ102V	S.M.CARB	0.1W	5%	1K Ω
R2318	ERJ6GEYJ101V	S.M.CARB	0.1W	5%	100 Ω
R2319	ERJ6GEYJ101V	S.M.CARB	0.1W	5%	100 Ω
R2321	ERJ6GEYJ104V	S.M.CARB	0.1W	5%	100K Ω
R2322	ERJ6GEYJ104V	S.M.CARB	0.1W	5%	100K Ω
R2325	ERDS2TJ2R2T	CARBON	0.25W	5%	2R2 Ω
R2326	ERDS2TJ2R2T	CARBON	0.25W	5%	2R2 Ω
R2327	ERDS2TJ2R2T	CARBON	0.25W	5%	2R2 Ω
R2329	ERDS2TJ2R2T	CARBON	0.25W	5%	2R2 Ω
R2380	ERJ6GEYJ151V	S.M.CARB	0.1W	5%	150 Ω
R2381	ERJ6GEYJ102V	S.M.CARB	0.1W	5%	1K Ω
R2382	ERJ6GEYJ102V	S.M.CARB	0.1W	5%	1K Ω
R2383	ERJ6GEYJ103V	S.M.CARB	0.1W	5%	10K Ω
R2384	ERDS1TJ560T	CARBON	0.5W	5%	56 Ω
R2385	ERJ6GEYJ153V	S.M.CARB	0.1W	5%	15K Ω
R2386	ERJ6GEYJ103V	S.M.CARB	0.1W	5%	10K Ω
R3001	ERDS2TJ101T	CARBON	0.25W	5%	100 Ω
R3002	ERJ6GEYJ471V	S.M.CARB	0.1W	5%	470 Ω
R3003	ERJ6GEYJ101V	S.M.CARB	0.1W	5%	100 Ω
R3004	ERJ6GEYJ153V	S.M.CARB	0.1W	5%	15K Ω
R3005	ERDS2TJ101T	CARBON	0.25W	5%	100 Ω
R3006	ERJ6GEYJ471V	S.M.CARB	0.1W	5%	470 Ω
R3007	ERJ6GEYJ101V	S.M.CARB	0.1W	5%	100 Ω
R3008	ERJ6GEYJ153V	S.M.CARB	0.1W	5%	15K Ω
R3013	ERDS2TJ101T	CARBON	0.25W	5%	100 Ω
R3014	ERJ6GEYJ471V	S.M.CARB	0.1W	5%	470 Ω
R3015	ERJ6GEYJ101V	S.M.CARB	0.1W	5%	100 Ω
R3017	ERDS2TJ101T	CARBON	0.25W	5%	100 Ω
R3018	ERJ6GEYJ471V	S.M.CARB	0.1W	5%	470 Ω
R3019	ERJ6GEYJ101V	S.M.CARB	0.1W	5%	100 Ω
R3021	ERJ6GEYJ750V	S.M.CARB	0.1W	5%	75 Ω
R3028	ERJ6GEY0R00V	S.M.CARB	0.1W		0 Ω
R3030	ERJ6GEY0R00V	S.M.CARB	0.1W		0 Ω
R3044	ERJ6GEYJ750V	S.M.CARB	0.1W	5%	75 Ω
R3046	ERJ6GEYJ101V	S.M.CARB	0.1W	5%	100 Ω
R3047	ERJ6GEYJ101V	S.M.CARB	0.1W	5%	100 Ω
R3049	ERJ6GEYJ101V	S.M.CARB	0.1W	5%	100 Ω
R3057	ERJ6GEY0R00V	S.M.CARB	0.1W		0 Ω
R3132	ERJ6GEYJ101V	S.M.CARB	0.1W	5%	100 Ω
R3133	ERJ6GEYJ101V	S.M.CARB	0.1W	5%	100 Ω
R3134	ERDS1TJ151T	CARBON	0.5W	5%	150 Ω
R3135	ERDS1TJ151T	CARBON	0.5W	5%	150 Ω

Cct Ref	Parts Number	Description			
R3140	ERJ6GEY0R00V	S.M.CARB	0.1W		0 Ω
R3247	ERJ6GEYJ101V	S.M.CARB	0.1W	5%	100 Ω
R3250	ERJ6GEYJ101V	S.M.CARB	0.1W	5%	100 Ω

CAPACITORS

C001	ECA1CM470B	ELECT	16V	47μF
C002	ECJ2VF1H104Z	S.M.CAP	50V	100nF
C005	ECJ2VF1H104Z	S.M.CAP	50V	100nF
C006	ECA1CM471B	ELECT	16V	470μF
C007	ECA1HM330B	ELECT	50V	33μF
C008	ECA1HM010B	ELECT	50V	1μF
C111	ECJ2FB1H104K	S.M.CAP	50V	100nF
C191	ECJ2FB1H104K	S.M.CAP	50V	100nF
C193	F2A1C100A180	ELECT	16V	10μF
C209	ECJ2VC1H101J	S.M.CAP	50V	100pF
C210	ECJ2FB1H104K	S.M.CAP	50V	100nF
C211	ECA1CM102B	ELECT	16V	1000μF
C253	ECEA1EN4R7UB	ELECT	25V	4.7μF
C257	ECEA1EN4R7UB	ELECT	25V	4.7μF
C264	ECA1HHG222E	ELECT	50V	2200μF
C354	ECQE2104KF3	FILM	250V	100nF
C356	ECJ2VC1H561J	S.M.CAP	50V	560pF
C360	ECKW3D152KBP	CERAMIC	2KV	1.5nF
C361	F2A1HR47A182	ELECT	50V	0.47μF
C363	ECA1CM221B	ELECT	16V	220μF
C368	ECA2EM100B	ELECT	250V	10μF
C401	ECJ2VC1H152J	S.M.CAP	50V	1.5nF
C404	ECQB1222JF3	FILM	100V	2.2nF
C405	F1B1H270A046	CERAMIC	50V	27pF
C406	ECA1HHG221B	ELECT	50V	220μF
C407	ECJ2VC1H152J	S.M.CAP	50V	1.5nF
C408	ECQB1154JF3	FILM	100V	150nF
C502	ECKR3A182KBP	CERAMIC	1KV	1.8nF
C503	ECKR3A182KBP	CERAMIC	1KV	1.8nF
C504	ECJ2VB1H681K	S.M.CAP	50V	680pF
C507	ECJ2VF1C105Z	S.M.CAP	16V	1μF
C511	F2A1V1010038	ELECT	35V	100μF
C512	F1B2H471A015	CERAMIC	500V	470pF
C513	F1B2H331A015	CERAMIC	500V	330pF
C514	F2A1E102A151	ELECT	25V	330pF
C515	F1B2H331A015	CERAMIC	500V	330pF
C516	F2A1E102A151	ELECT	25V	330pF
C517	F1B2H471A015	CERAMIC	500V	470pF
C518	F2A1H1020027	ELECT	50V	1000μF
C519	ECA2EM221E	ELECT	250V	220μF
C520	ECA0JM221B	ELECT	6.3V	220μF
C552	F2A2E100A025	ELECT	250V	10μF
C553	ECWF2684JBB	FILM	250V	680nF
C554	ECWF2824JBB	FILM	250V	820nF
C555	ECWF2564JSB	FILM	250V	560nF
C558	F2A2ER47A025	ELECT	250V	0.47μF
C559	ECWH20682JVB	FILM	2KV	6.8nF
C560	ECQF4223JZH	FILM	400V	22nF
C561	ECKW3D681JBR	CERAMIC	2kV	680pF
C562	ECWH20202JVY	FILM	2kV	2nF
C565	ECQB1H273JF3	FILM	50V	27nF
C568	ECWH20202JVY	FILM	2kV	2nF
C569	ECWH20682JVB	FILM	2KV	6.8nF
C570	ECJ2VC1H560J	S.M.CAP	50V	56pF
C580	F2A1H220A182	ELECT	50V	22μF
C581	ECQV1H105JL3	FILM	50V	1μF
C601	ECEA1CKA101B	ELECT	16V	100μF
C602	ECJ2FB1H104K	S.M.CAP	50V	100nF
C603	ECJ2VB1H472K	S.M.CAP	50V	4.7nF
C604	ECQV1H224JL3	FILM	50V	220nF
C605	ECQV1H224JL3	FILM	50V	220nF
C606	ECJ2VC1H222J	S.M.CAP	50V	2.2nF

Cct Ref	Parts Number	Description			
C607	ECEA1HKA010B	ELECT	50V	1μF	
C608	ECEA1HKA100B	ELECT	50V	10μF	
C609	ECJ2FB1H104K	S.M.CAP	50V	100nF	
C610	ECJ2VB1H103K	S.M.CAP	50V	10nF	
C612	ECJ2VB1H472K	S.M.CAP	50V	4.7nF	
C613	ECJ2VB1H472K	S.M.CAP	50V	4.7nF	
C614	ECQV1H104JL3	FILM	50V	0.1μF	
C615	ECQV1H224JL3	FILM	50V	220nF	
C619	ECQV1H104JL3	FILM	50V	0.1μF	
C620	ECJ2VC1H470J	S.M.CAP	50V	47pF	
C621	ECJ2VB1H471K	S.M.CAP	50V	470pF	
C622	ECJ2VF1H104Z	S.M.CAP	50V	100nF	
C623	ECJ2VC1H270J	S.M.CAP	50V	27pF	
C624	F2A1C470A180	ELECT	16V	47μF	
C625	ECEA1AN221UB	ELECT	10V	220μF	
C632	ECJ2YB1H473K	S.M.CAP	50V	47nF	
C633	ECJ2VF1C105Z	S.M.CAP	16V	1μF	
C635	F2A1C470A180	ELECT	16V	47μF	
C636	F2A1C101A180	ELECT	16V	100μF	
C640	ECA1CM330B	ELECT	16V	33μF	
C651	ECJ2VF1H223Z	S.M.CAP	50V	22nF	
C652	ECJ2VF1H223Z	S.M.CAP	50V	22nF	
C653	ECJ2VF1H223Z	S.M.CAP	50V	22nF	
C654	ECJ2VC1H101J	S.M.CAP	50V	100pF	
C655	ECJ2VC1H101J	S.M.CAP	50V	100pF	
C656	ECJ2VC1H101J	S.M.CAP	50V	100pF	
C659	ECJ2VC1H102J	S.M.CAP	50V	1nF	
C670	F2A1C100A180	ELECT	16V	10μF	
C681	ECJ2VF1H103Z	S.M.CAP	50V	10nF	
C682	F2A1E470A149	ELECT	25V	47μF	
C687	ECJ2VF1H104Z	S.M.CAP	50V	100nF	
C688	ECJ2VC1H102J	S.M.CAP	50V	1nF	
C689	ECJ2VB1C224K	S.M.CAP	16V	220nF	
C690	ECJ2VB1C224K	S.M.CAP	16V	220nF	
C701	ECA1HHG101B	ELECT	50V	100μF	
C702	ECJ2VB1H103K	S.M.CAP	50V	10nF	
C703	ECEA1HGE100B	ELECT	50V	10μF	
C704	ECQB1H223JF3	FILM	50V	22nF	
C705	ECQB1H102KF3	FILM	50V	1nF	
C804	ECQU2A154MLA	FILM	275V	150nF	⚠
C806	ECKW2H472PU7	CERAMIC	500V	4.7nF	
C807	ECKW2H472PU7	CERAMIC	500V	4.7nF	
C808	ECKW2H472PU7	CERAMIC	500V	4.7nF	
C809	ECKW2H472PU7	CERAMIC	500V	4.7nF	
C810	F2B2G2210011	ELECT	400V	220μF	
C811	ECQM4473JZW	FILM	400V	47nF	
C816	ECA1VM100B	ELECT	35V	10μF	
C819	F2A1H1R00053	ELECT	50V	1μF	
C821	ECKW3D681KBP	CERAMIC	2KV	680pF	
C825	ECQB1H471JF3	FILM	50V	470pF	
C826	ECQB1H103JF3	FILM	50V	10nF	
C830	ECQB1H332JF3	FILM	50V	3.3nF	
C834	ECQE2A473JFB	FILM	250V	47nF	
C838	ECQU2A224BN9	FILM	250V	220nF	⚠
C839	ECQU2A224BN9	FILM	250V	220nF	⚠
C840	ECKCNA101MB7	CERAMIC	250V	100pF	⚠
C851	F1B2H471A015	CERAMIC	500V	470pF	
C855	F2A1V471A141	ELECT	35V	470μF	
C865	F2A2C100A023	ELECT	160V	10μF	
C866	ECKW3D471KBP	CERAMIC	2KV	470pF	
C867	EEUEB2D101E	ELECT	200V	100μF	
C870	EEUFC1C472B	ELECT	16V	4700μF	
C871	F1B2H471A015	CERAMIC	500V	470pF	
C872	EEUFC1C471B	ELECT	16V	470μF	
C873	F1B2H471A015	CERAMIC	500V	470pF	
C875	ECA1EHG222E	ELECT	25V	2200μF	

Cct Ref	Parts Number	Description		
C876	F2A1C101A180	ELECT	16V	100μF
C877	F2A1C101A180	ELECT	16V	100μF
C879	ECQV1H104JL3	FILM	50V	0.1μF
C880	F2A1C101A180	ELECT	16V	100μF
C881	F2A1C101A180	ELECT	16V	100μF
C882	ECJ2VF1H104Z	S.M.CAP	50V	100nF
C883	ECJ2VF1H104Z	S.M.CAP	50V	100nF
C884	ECQV1H104JL3	FILM	50V	0.1μF
C885	ECQV1H104JL3	FILM	50V	0.1μF
C901	ECJ2YB1H473K	S.M.CAP	50V	47nF
C902	ECJ2VB1H103K	S.M.CAP	50V	10nF
C903	ECJ2VC1H390J	S.M.CAP	50V	39pF
C905	F1B2H472A015	CERAMIC	500V	4.7nF
C906	F1B2H472A015	CERAMIC	500V	4.7nF
C907	F2A2C330A023	ELECT	160V	33μF
C908	ECA2CM010B	ELECT	160V	1pF
C909	ECA1CM221B	ELECT	16V	220μF
C910	F2A1C470A180	ELECT	16V	47μF
C911	ECJ2VF1H103Z	S.M.CAP	50V	10nF
C912	ECJ2VF1H224Z	S.M.CAP	50V	220nF
C913	ECA1CM221B	ELECT	16V	220μF
C1064	ECJ2VB1H103K	S.M.CAP	50V	10nF
C1065	F2A1C101A180	ELECT	16V	100μF
C1066	ECJ2VC1H331J	S.M.CAP	50V	330pF
C1118	ECJ2FB1H104K	S.M.CAP	50V	100nF
C1119	ECJ2VC1H221J	S.M.CAP	50V	220pF
C1121	ECJ2VC1H221J	S.M.CAP	50V	220pF
C1122	ECEA1AN221UB	ELECT	10V	220μF
C1125	ECEA1CKA100B	ELECT	16V	10μF
C1140	ECEA1CKA101B	ELECT	16V	100μF
C1141	ECJ2VF1H104Z	S.M.CAP	50V	100nF
C1142	ECJ2VF1H104Z	S.M.CAP	50V	100nF
C1900	ECQB1H104JF3	FILM	50V	100nF
C1901	ECJ2VB1H103K	S.M.CAP	50V	10nF
C1903	ECA1EM470B	ELECT	25V	47μF
C1904	ECQB1H104JF3	FILM	50V	100nF
C1905	ECQB1H104JF3	FILM	50V	100nF
C1909	ECJ2VB1H103K	S.M.CAP	50V	10nF
C2013	ECJ2VC1H560J	S.M.CAP	50V	56pF
C2014	ECJ2VC1H560G	S.M.CAP	50V	56pF
C2015	ECJ2VC1H220J	S.M.CAP	50V	22pF
C2038	ECJ2VB1H103K	S.M.CAP	50V	10nF
C2039	ECJ2VF1H104Z	S.M.CAP	50V	100nF
C2040	ECA1CM101B	ELECT	16V	100μF
C2041	ECJ2VF1H104Z	S.M.CAP	50V	100nF
C2102	ECJ2VC1H102J	S.M.CAP	50V	1nF
C2103	ECJ2VC1H102J	S.M.CAP	50V	1nF
C2104	ECJ2VC1H102J	S.M.CAP	50V	1nF
C2105	ECJ2VC1H102J	S.M.CAP	50V	1nF
C2106	ECJ2FB1H473K	S.M.CAP	50V	47nF
C2107	ECJ2VC1H102J	S.M.CAP	50V	1nF
C2108	ECJ2VC1H102J	S.M.CAP	50V	1nF
C2109	ECJ2VC1H102J	S.M.CAP	50V	1nF
C2110	ECJ2VC1H102J	S.M.CAP	50V	1nF
C2111	F2A1C100A180	ELECT	16V	10μF
C2112	F2A1C100A180	ELECT	16V	10μF
C2113	F2A1H3R3A182	ELECT	50V	3.3μF
C2114	ECJ2VF1H104Z	S.M.CAP	50V	100nF
C2115	ECJ2VC1H221J	S.M.CAP	50V	220pF
C2116	ECJ2VC1H221J	S.M.CAP	50V	220pF
C2117	ECJ2VC1H221J	S.M.CAP	50V	220pF
C2118	ECJ2VC1H221J	S.M.CAP	50V	220pF
C2119	ECJ2VC1H221J	S.M.CAP	50V	220pF
C2120	ECJ2VC1H221J	S.M.CAP	50V	220pF
C2121	F2A1C100A180	ELECT	16V	10μF
C2122	ECJ2VF1H104Z	S.M.CAP	50V	100nF

Cct Ref	Parts Number	Description		
C2123	ECJ2VC1H221J	S.M.CAP	50V	220pF
C2125	ECJ2VC1H560J	S.M.CAP	50V	56pF
C2126	ECJ2VC1H560J	S.M.CAP	50V	56pF
C2127	ECJ2VC1H010C	S.M.CAP	50V	1pF
C2128	ECJ2VC1H010C	S.M.CAP	50V	1pF
C2129	F2A1C1020049	ELECT	16V	1000μF
C2130	F2A1C3310039	ELECT	16V	330μF
C2131	ECJ2VF1H103Z	S.M.CAP	50V	10nF
C2132	ECJ2VF1H103Z	S.M.CAP	50V	10nF
C2133	ECJ2FB1C474K	S.M.CAP	16V	470nF
C2134	ECJ2VF1H103Z	S.M.CAP	50V	10nF
C2135	F2A1C101A180	ELECT	16V	100μF
C2136	ECJ2VF1H104Z	S.M.CAP	50V	100nF
C2137	F2A1C100A180	ELECT	16V	10μF
C2138	ECJ2VB1H471K	S.M.CAP	50V	470pF
C2139	ECJ2VC1H221J	S.M.CAP	50V	220pF
C2140	F2A1C101A180	ELECT	16V	100μF
C2141	ECJ2VC1H152J	S.M.CAP	50V	1.5nF
C2142	ECJ2VB1H103K	S.M.CAP	50V	10nF
C2149	ECJ2FB1H104K	S.M.CAP	50V	100nF
C2150	F2A1E1010056	ELECT	25V	100μF
C2302	F2A1C470A180	ELECT	16V	47μF
C2304	F2A1C470A180	ELECT	16V	47μF
C2305	ECJ2VC1H101J	S.M.CAP	50V	100pF
C2306	ECJ2VC1H101J	S.M.CAP	50V	100pF
C2307	ECA1HM2R2B	ELECT	50V	2.2μF
C2308	ECJ2VF1H104Z	S.M.CAP	50V	100nF
C2309	ECJ2VF1H104Z	S.M.CAP	50V	100nF
C2310	ECJ2VF1H104Z	S.M.CAP	50V	100nF
C2311	ECJ2VF1H104Z	S.M.CAP	50V	100nF
C2314	ECA1EM470B	ELECT	25V	47μF
C2315	ECA1EM222E	ELECT	25V	2200μF
C2316	ECJ2VF1H104Z	S.M.CAP	50V	100nF
C2317	ECJ2VF1H104Z	S.M.CAP	50V	100nF
C2318	ECJ2VF1H104Z	S.M.CAP	50V	100nF
C2380	F2A1C101A180	ELECT	16V	100μF
C2381	F2A1C100A180	ELECT	16V	10μF
C3003	F2A1C470A180	ELECT	16V	47μF
C3005	ECJ2VC1H222J	S.M.CAP	50V	2.2nF
C3006	ECJ2FB1C474K	S.M.CAP	16V	470nF
C3010	F2A1C470A180	ELECT	16V	47μF
C3012	ECJ2VC1H222J	S.M.CAP	50V	2.2nF
C3013	ECJ2FB1C474K	S.M.CAP	16V	470nF
C3017	F2A1C470A180	ELECT	16V	47μF
C3019	ECJ2VC1H222J	S.M.CAP	50V	2.2nF
C3020	ECJ2FB1C474K	S.M.CAP	16V	470nF
C3024	F2A1C470A180	ELECT	16V	47μF
C3026	ECJ2VC1H222J	S.M.CAP	50V	2.2nF
C3027	ECJ2FB1C474K	S.M.CAP	16V	470nF
C3036	ECJ2VC1H101J	S.M.CAP	50V	100pF
C3037	ECJ2VC1H101J	S.M.CAP	50V	100pF
C3038	ECJ2VC1H101J	S.M.CAP	50V	100pF
C3039	ECJ2VC1H101J	S.M.CAP	50V	100pF
C3136	ECJ2VB1H103K	S.M.CAP	50V	10nF
C3137	ECJ2VB1H103K	S.M.CAP	50V	10nF
C3138	F2A1C101A180	ELECT	16V	100μF
C3139	F2A1C101A180	ELECT	16V	100μF
C3143	ECJ2VC1H561J	S.M.CAP	50V	560pF
C3144	ECJ2VC1H561J	S.M.CAP	50V	560pF
C3145	ECJ2VC1H561J	S.M.CAP	50V	560pF
C3146	ECJ2VC1H561J	S.M.CAP	50V	560pF

TERMINALS AND LINKS

JK2301	JPJ841101320	RCA SOCKET	
JK3001	350808500	SCART SOCKET	
JK3201	TJB0E601	FRONT AV TERMINAL	
SC351	330550049	CRT SOCKET	⚠

Cct Ref	Parts Number	Description	
SWITCHES			
S840	ESB92S11B	SWITCH	⚠
S1011	EVQ11G05R	SWITCH	
S1012	EVQ11G05R	SWITCH	
S1013	EVQ11G05R	SWITCH	
S1014	EVQ11G05R	SWITCH	
S1015	EVQ11G05R	SWITCH	
RELAYS			
RL801	K6B1ADA00010	RELAY	⚠

DIFFERENCES FOR MODEL TX--29PS2D

EXPLODED VIEW			
15	TKU0E0127	BACK COVER	⚠
16	TKY0E0131	CABINET	
17	TNP0ED003AB	D P.C.B.	⚠
18	TKP0E10601	DOOR LID	
19	TBM0E0192-1	MODEL LABEL	
20	TBX0E80401	POWER BUTTON	
21	TKP0E10801-1	REAR AV COVER	
INSTRUCTION BOOKS			
.	TQB0E0001A-M	GERMAN	
.	TQB0E0001C-M	ITALIAN	
.	TQB0E0001D-M	FRENCH	
I.C.s			
IC601	TDA9594V202S	MICRO PROCESSOR	
IC1103	GP3/1A06D	EAROM M24C16-WMN6T	

DIFFERENCES FOR MODEL TX--29PS2F

EXPLODED VIEW			
15	TKU0E0127	BACK COVER	⚠
16	TKY0E0131	CABINET	
17	TNP0ED003AA	D P.C.B.	⚠
18	TKP0E10601	DOOR LID	
19	TBM0E0193	MODEL LABEL	
20	TBX0E80401	POWER BUTTON	
21	TKP0E10801-1	REAR AV COVER	
INSTRUCTION BOOKS			
.	TQB0E0002A-M	GERMAN	
.	TQB0E0002B-M	DUTCH	
.	TQB0E0002D-M	FRENCH	
.	TQB0E0002E-M	SPANISH	
.	TQB0E0002F-M	SWEDISH	
.	TQB0E0002G-M	NORWEGIAN	
.	TQB0E0002H-M	FINNISH	
.	TQB0E0002K-M	DANISH	
I.C.s			
IC601	TDA9594V202S	MICRO PROCESSOR	
IC1103	GP3/1A06F	EAROM M24C16-WMN6T	

DIFFERENCES FOR MODEL TX--29PS2P

EXPLODED VIEW			
15	TKU0E0127	BACK COVER	⚠
16	TKY0E0131	CABINET	
17	TNP0ED003AC	D P.C.B.	⚠
18	TKP0E10601	DOOR LID	
19	TBM0E0194	MODEL LABEL	
20	TBX0E80401	POWER BUTTON	
21	TKP0E10801-1	REAR AV COVER	
INSTRUCTION BOOKS			
.	TQB0E0003M-M	BULGARIAN	
.	TQB0E0003N-M	ROMANIAN	
.	TQB0E0003P-M	POLISH	
.	TQB0E0003Q-M	HUNGARIAN	
.	TQB0E0003R-M	CZECH	
.	TQB0E0003U-M	ENGLISH	
.	TQB0E0003W-M	SLOVAKIAN	
I.C.s			
IC601	TDA9594V302S	MICRO PROCESSOR	
IC1103	GP3/1A06P	EAROM M24C16-WMN6T	

DIFFERENCES FOR MODEL TX--29PS2P/B

EXPLODED VIEW			
15	TKU0E0129	BACK COVER	⚠
16	TKY0E0132	CABINET	
17	TNP0ED003AC	D P.C.B.	⚠
18	TKP0E10607	DOOR LID	
19	TBM0E0205	MODEL LABEL	
20	TBX0E80402	POWER BUTTON	
21	TKP0E10802	REAR AV COVER	
INSTRUCTION BOOKS			
.	TQB0E0003M-M	BULGARIAN	
.	TQB0E0003N-M	ROMANIAN	
.	TQB0E0003P-M	POLISH	
.	TQB0E0003Q-M	HUNGARIAN	
.	TQB0E0003R-M	CZECH	
.	TQB0E0003U-M	ENGLISH	
.	TQB0E0003W-M	SLOVAKIAN	
I.C.s			
IC601	TDA9594V302S	MICRO PROCESSOR	
IC1103	GP3/1A06P	EAROM M24C16-WMN6T	

NOTES

SCHEMATIC DIAGRAMS FOR MODELS TX-29PS2D, TX-29PS2F, TX-29PS2P, TX-29PS2P/B (GP3 CHASSIS)

IMPORTANT SAFETY NOTICE

Components identified by ⚠ mark have special characteristics important for safety. When replacing any of these components, use only manufacturers' specified parts.

NOTE

1. RESISTOR
   All resistors are carbon ¼W resistor, unless marked otherwise.
   Unit of resistance is OHM (Ω) (k=1,000, M=1,000,000)
2. CAPACITORS
   All capacitors are ceramic 50V unless marked otherwise.
   Unit of capacitance is μF unless otherwise stated.
3. COIL
   Unit of inductance is μH, unless otherwise stated.

4. TEST POINT
   Test Point Position

5. EARTH SYMBOL

   Chassis Earth (Cold)

   Line Earth (Hot)

6. VOLTAGE MEASUREMENT
   Voltage is measured by a d.c. voltmeter.
   Measurement conditions are as follows:

Power source	a.c. 220V-240V, 50Hz
Receiving Signal	Colour Bar signal (RF)
All customer controls	Maximum position

7.

   Indicates the Video signal path

   Indicates the Audio signal path

These schematic diagrams are the latest at time of printing and are subject to change without notice.

REMARKS

a. Do not touch the hot part, or the hot and cold parts at the same time, as you are liable to a shock hazard.

b. Do not short circuit the hot and cold circuits as electrical components may be damaged.

c. Do not connect an instrument, such as an oscilloscope, to the hot and cold circuits simultaneously as this may cause fuse failure. Connect the earth of the instruments to the earth connection of the circuit being measured.

d. Make sure to disconnect the power plug before removing the chassis.

NOTE

1. The Power Supply Circuit contains a circuit area, which uses a separate power supply to isolate the earth connection. The circuit is defined by HOT and COLD indications in the schematic diagram. All circuits, except the Power Circuit, are COLD.

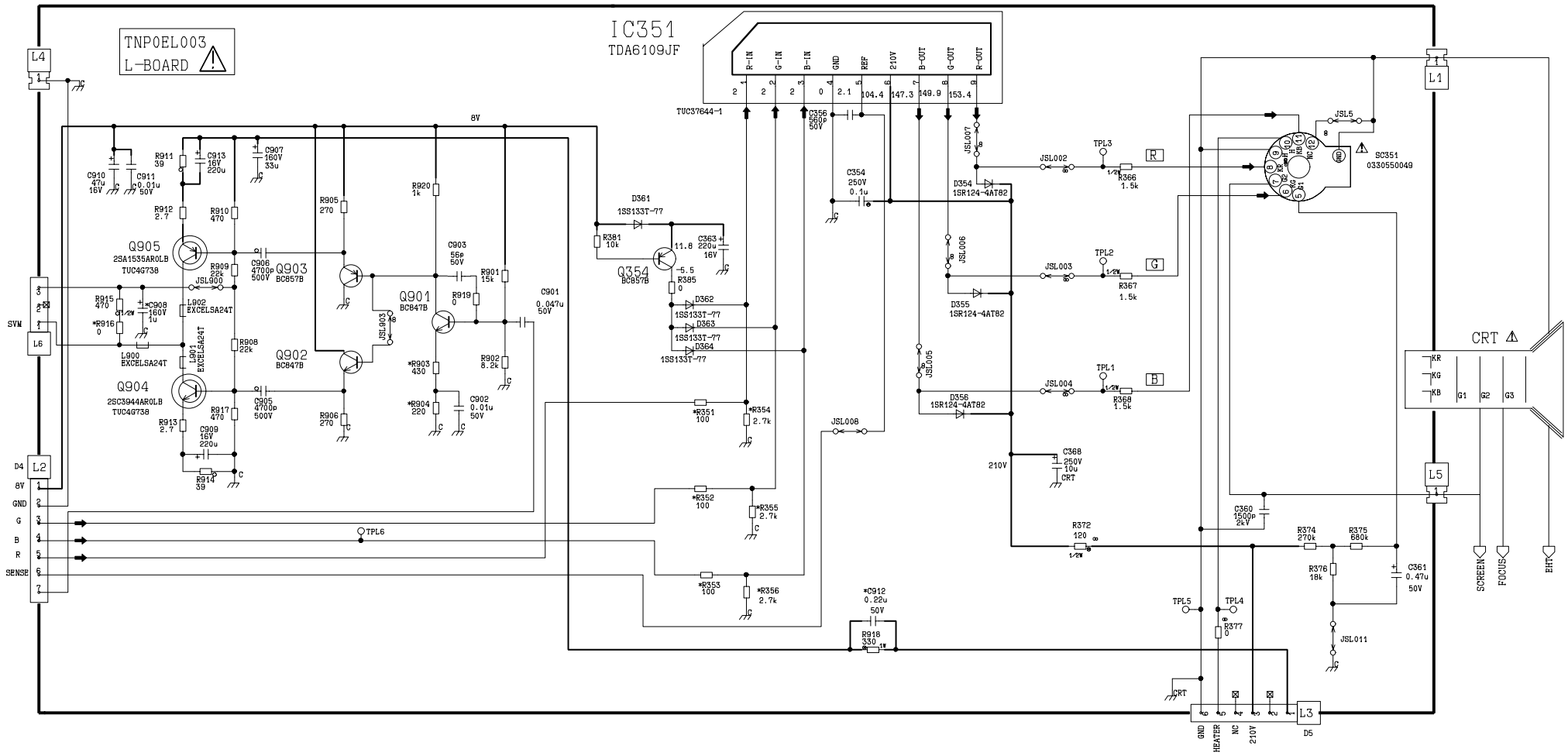
TNP0EL003
L-BOARD
IC351
TDA6109JF
R-IN
G-IN
B-IN
GND
REF
210V
B-OUT
G-OUT
R-OUT
TUC37644-1
8V
Q905
2SA1535AR0LB
TUC4G738
Q904
2SC3944AR0LB
TUC4G738
Q903
BC857B
Q902
BC847B
Q901
BC847B
Q354
BC857B
D361
1SS133T-77
D362
D363
D364
D354
1SR124-4AT82
D355
1SR124-4AT82
D356
1SR124-4AT82
SC351
0330550049
CRT
SVM
D4
GND
G
B
R
SENSE
TPL6
TPL1
TPL2
TPL3
TPL4
TPL5
JSL002
JSL003
JSL004
JSL005
JSL006
JSL007
JSL008
JSL011
JSL900
JSL903
L900
EXCELSA24T
L901
EXCELSA24T
L902
EXCELSA24T
SCREEN
FOCUS
EHT
HEATER
NC
210V
D5

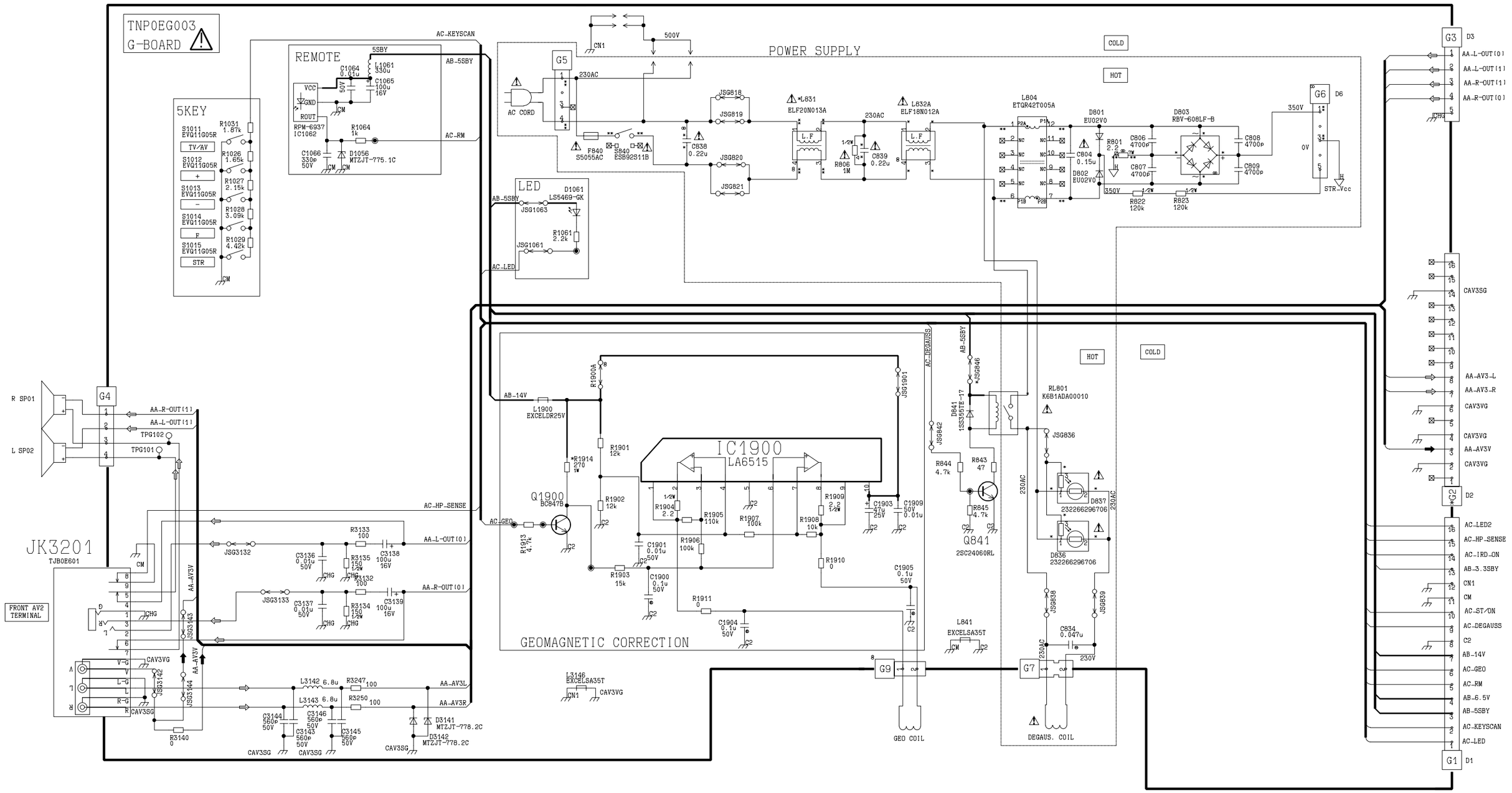
TNP0EG003
G-BOARD
5KEY
S1011 EVQ11G05R
TV/AV
S1012 EVQ11G05R
S1013 EVQ11G05R
S1014 EVQ11G05R
P
S1015 EVQ11G05R
STR
R1031 1.87k
R1026 1.65k
R1027 2.15k
R1028 3.09k
R1029 4.42k
REMOTE
RPM-6937
IC1062
VCC
GND
ROUT
C1064 0.01u
L1061 330u
C1065 100u 16V
R1064 1k
C1066 330p 50V
D1056 MTZJT-775.1C
AC-KEYSCAN
AB-5SBY
AC-RM
LED
D1061 LS5469-GK
JSG1063
JSG1061
R1061 2.2k
AC-LED
POWER SUPPLY
COLD
HOT
G5
AC CORD
CN1
500V
230AC
F840 S5055AC
S840 ESB92S11B
C838 0.22u
JSG818
JSG819
JSG820
JSG821
L831 ELF20N013A
L832A ELF18N012A
R806 1M
C839 0.22u
LB04 ETQR42T005A
C804 0.15u
D801 EU02V0
D802 EU02V0
R801 2.2
C806 4700p
C807 4700p
D803 RBV-608LF-B
C808 4700p
C809 4700p
R822 120k
R823 120k
350V
G6
D6
0V
STR-Vcc
G3
D3
AA-L-OUT(0)
AA-L-OUT(1)
AA-R-OUT(1)
AA-R-OUT(0)
CHG
CAV3SG
AA-AV3-L
AA-AV3-R
CAV3VG
AA-AV3V
D2
AC-LED2
AC-HP-SENSE
AC-IRD-ON
AB-3.3SBY
CN1
CM
AC-ST/ON
AC-DEGAUSS
C2
AB-14V
AC-GEO
AC-RM
AB-6.5V
AB-5SBY
AC-KEYSCAN
AC-LED
G1
D1
R SP01
L SP02
G4
AA-R-OUT(1)
AA-L-OUT(1)
TPG102
TPG101
JK3201
TJB0E601
FRONT AV2 TERMINAL
AC-HP-SENSE
AC-GEO
JSG3132
JSG3133
AA-L-OUT(0)
AA-R-OUT(0)
R3133 100
R3135 150 1/2W
R3132 100
R3134 150 1/2W
C3138 100u 16V
C3139 100u 16V
C3136 0.01u 50V
C3137 0.01u 50V
JSG3143
JSG3144
JSG3142
AA-AV3V
CAV3VG
CAV3SG
L3142 6.8u
L3143 6.8u
R3247 100
R3250 100
AA-AV3L
AA-AV3R
C3144 560p 50V
C3143 560p 50V
C3146 560p 50V
C3145 560p 50V
D3141 MTZJT-778.2C
D3142 MTZJT-778.2C
R3140 0
GEOMAGNETIC CORRECTION
IC1900
LA6515
AB-14V
L1900 EXCELDR25V
R1900A
R1901 12k
R1902 12k
R1914 270 1W
Q1900 BC847B
R1913 4.7k
R1903 15k
C1901 0.01u 50V
C1900 0.1u 50V
R1904 2.2 1/2W
R1905 110k
R1906 100k
R1907 100k
R1908 10k
R1909 2.2 1/2W
R1910 0
R1911 0
C1904 0.1u 50V
C1905 0.1u 50V
C1903 47u 25V
C1909 50V 0.01u
JSG1901
AC-DEGAUSS
JSG842
AB-5SBY
JSG846
D841 1SS355TE-17
R844 4.7k
R843 47
R845 4.7k
Q841 2SC24060RL
L841 EXCELSA35T
L3146 EXCELSA35T
CAV3VG
G9
GEO COIL
RL801 K6B1ADA00010
JSG836
D837 232266296706
D836 232266296706
JSG838
JSG839
C834 0.047u
230V
G7
DEGAUS. COIL

DIFFERENCE LIST

MODEL / SCH. NO.	TX-29PS2D	TX-29PS2P
	TX-29PS2F	TX-29PS2P/B
IC601	TDA9594V202S	TDA9594V302S

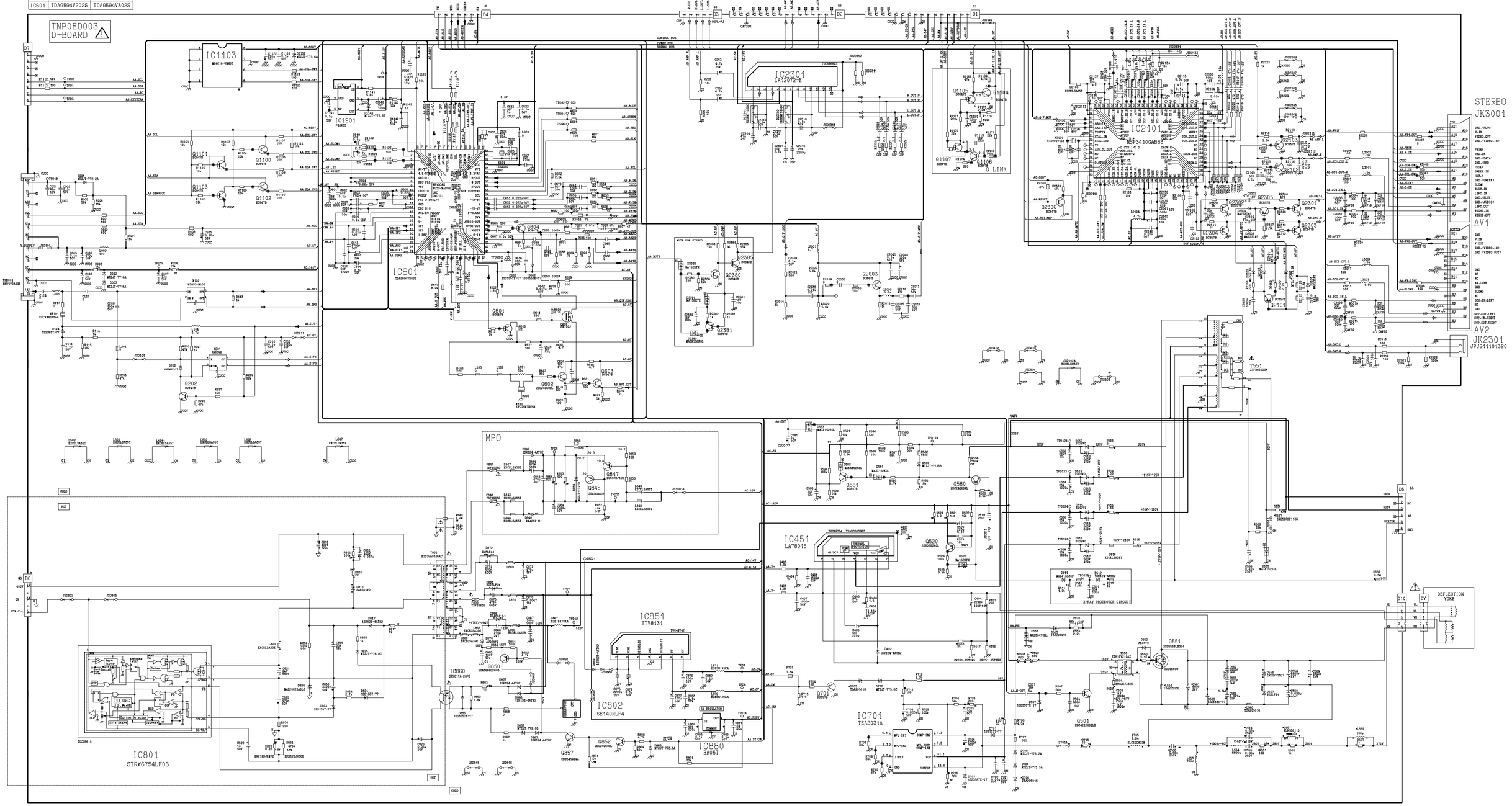

CONDUCTOR VIEWS FOR MODELS
TX-29PS2D, TX-29PS2F, TX-29PS2P, TX-29PS2P/B

D-BOARD TNP0ED003

TRAN'S		D2101	E1	D866	D5
Q1100	A4	D2102	D1	D867	E4
Q1101	A4	D2103	E1	D868	E4
Q1102	A4	D2104	E1	D869	E4
Q1103	A4	D2105	D1	D870	D5
Q1104	B3	D2303	E1	D872	E5
Q1105	B3	D2304	E1	D883	E5
Q1106	B3	D2380	E2	D885	D6
Q1107	B3	D2381	E2		
Q2003	B1	D2382	E2	IC'S	
Q202	B2	D402	A6	IC1103	C1
Q2101	E1	D507	C4	IC1201	B3
Q2102	D2	D511	A7	IC2101	D2
Q2103	D2	D512	A7	IC2301	D3
Q2301	E2	D513	A7	IC451	A6
Q2302	D2	D515	A6	IC601	B2
Q2303	E2	D516	B6	IC701	A5
Q2304	D2	D520	C4	IC801	E7
Q2305	E1	D550	C5	IC802	D5
Q2306	D1	D551	C4	IC851	E4
Q2380	E2	D552	A7	IC860	D6
Q2381	E2	D555	C7	IC880	D4
Q2385	E2	D556	C6		
Q501	C4	D557	B6	TP'S	
Q520	C5	D558	C4	TPD1	A4
Q551	C5	D580	A7	TPD11	E5
Q580	A7	D581	A7	TPD119	A7
Q581	A7	D582	A7	TPD12	C5
Q601	B2	D583	A7	TPD120	B6
Q602	B1	D602	B2	TPD121	A7
Q603	C2	D603	B2	TPD122	A7
Q604	B2	D701	A5	TPD123	A7
Q605	C2	D702	A5	TPD124	A6
Q701	A5	D704	A5	TPD14	D4
Q846	E4	D705	A5	TPD18	A1
Q847	E4	D707	A5	TPD19	A2
Q850	D4	D810	D6	TPD2	A4
Q852	D4	D817	D6	TPD21	E4
Q857	D4	D820	E7	TPD3	A4
		D823	D7	TPD4	D3
DIODES		D824	D7	TPD5	E5
D001	A2	D825	D6	TPD6	D4
D002	A2	D848	E5	TPD7	D5
D003	A1	D849	E5	TPD8	B3
D104	B2	D859	E5	TPD90	B3
D1132	C1	D862	D5	TPD91	B3
D1140	A3	D863	D4	TPD92	B3
D202	B2	D865	D4	TPD93	C2

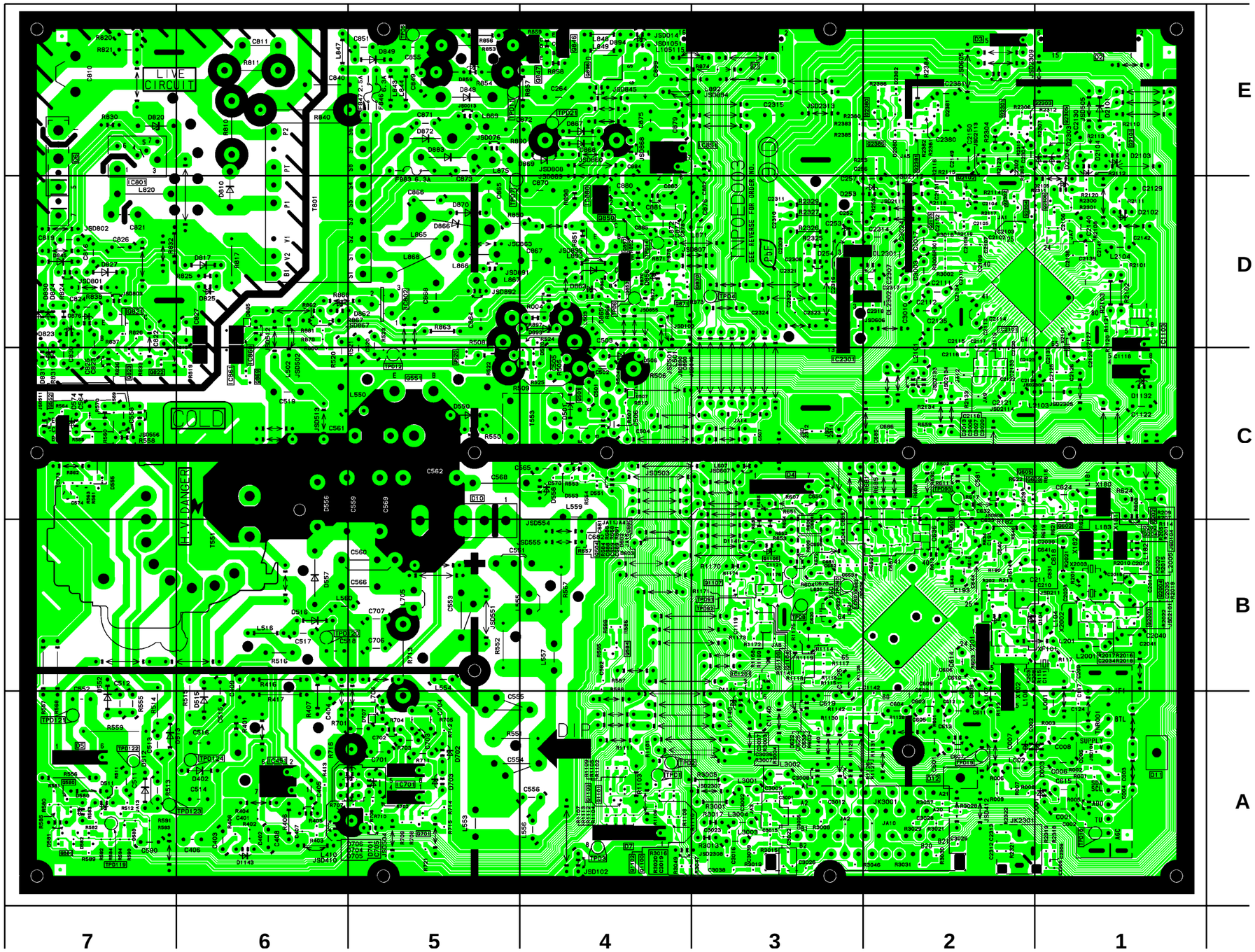

G-BOARD TNP0EG003

TRAN'S	
Q1900	B2
Q841	D5
DIODES	
D1056	D6
D1061	D6
D3141	D2
D3142	D2
D801	C4
D802	C4
D803	B4
D836	D4
D837	D4
D841	D5
IC'S	
IC1062	D5
IC1900	B2
TP'S	
TPG101	D3
TPG102	D3
TPG9	C2

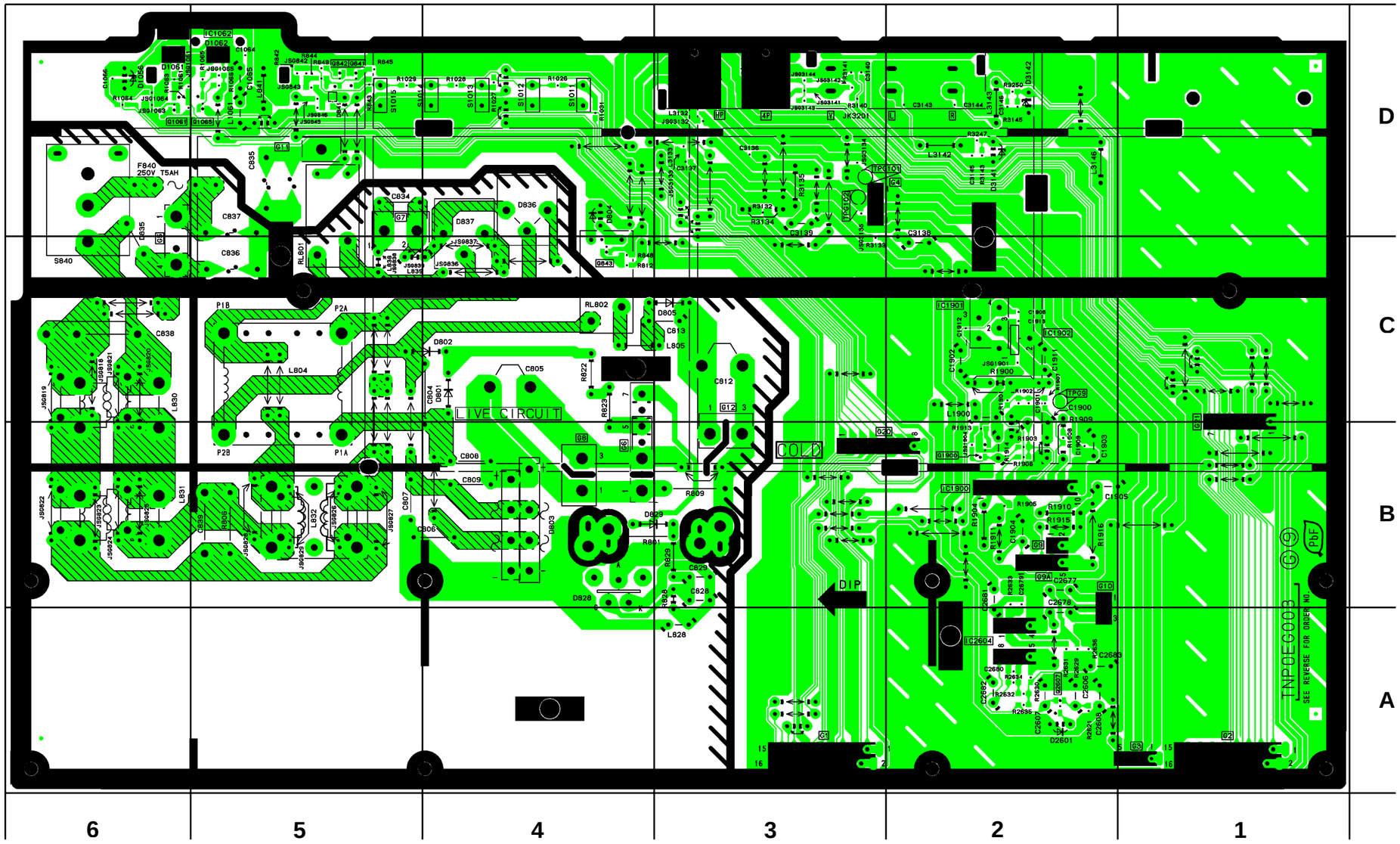

L-BOARD TNP0EL003

TRAN'S		D355	D3	TP'S	
Q354	A3	D356	D3	TPL1	D2
Q901	E2	D361	B3	TPL2	D3
Q902	E1	D362	C4	TPL3	D3
Q903	E2	D363	C4	TPL4	C2
Q904	C1	D364	C4	TPL5	C2
Q905	D2			TPL6	B4
		IC'S			
DIODES		IC351	D4		
D354	D3				

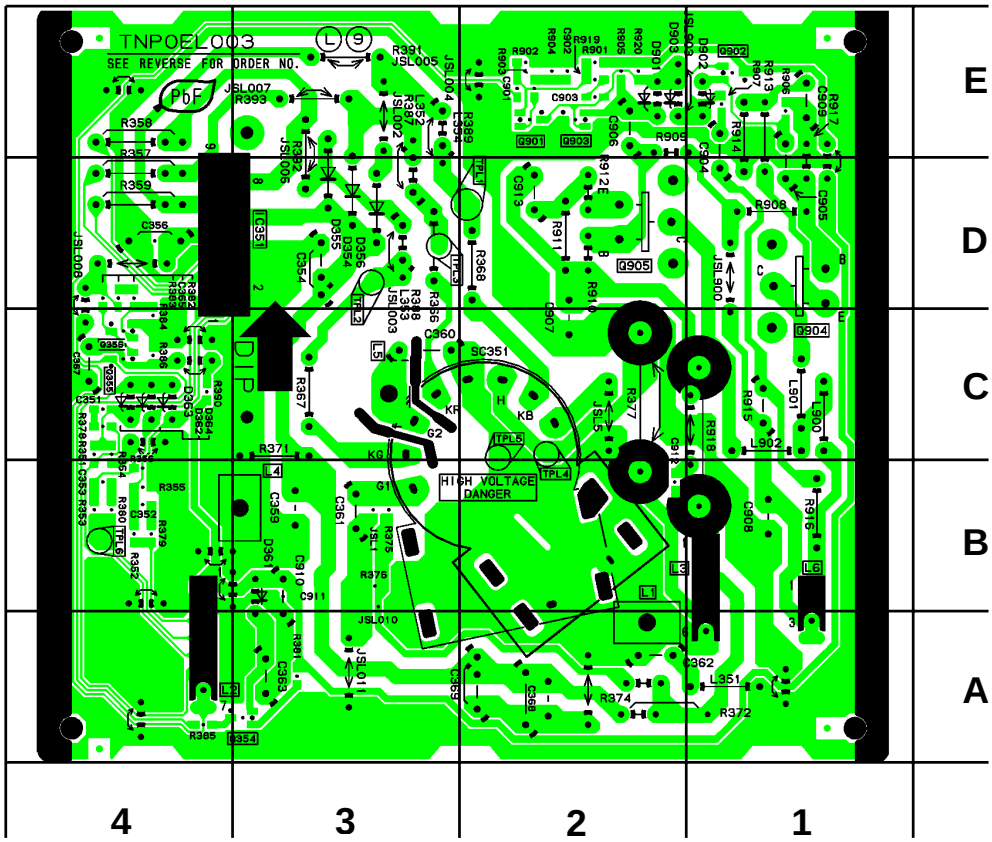

NOTES