Service Manual

Pioneer

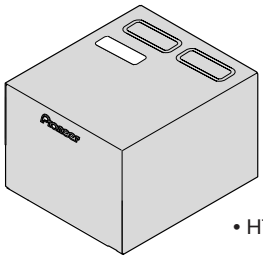

• HTV-SW1

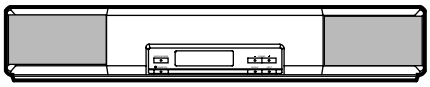

• HTV-C1

ORDER NO.
RRV2060

POWERED SUBWOOFER
HTV-SW1

CONTROL CENTER
HTV-C1

THIS MANUAL IS APPLICABLE TO THE FOLLOWING MODEL(S) AND TYPE(S).

Type	Model		Power Requirement	The voltage can be converted by the following method.
	HTV-SW1	HTV-C1		
DDXJ	○	——	AC110–127V/220–230V/240V	With the voltage selector
ADXJ	——	○	AC power supplied from power transformer's secondary of other system component	——————

● **This product is a system component. This product does not function properly when independent; to avoid malfunctions, be sure to connect it to the prescribed system component, otherwise damage may result. The Powered Subwoofer HTV-SW1 is a part of the Hometheater System HTV-1.**

Hometheater System HTV-1 (service manual RRV2063)
- **Control Center HTV-C1 (this service manual)**
- **Powered Subwoofer HTV-SW1 (this service manual)**
  - **Power Amp HTV-A1 (this service manual)**

CONTENTS

1. SAFETY INFORMATION 2
2. EXPLODED VIEWS AND PARTS LIST 3
3. SCHEMATIC DIAGRAM 10
4. PCB CONNECTION DIAGRAM 24
5. PCB PARTS LIST 36
6. ADJUSTMENT 39
7.GENERAL INFORMATION 40
7.1 PARTS 40
7.1.1 IC 40
7.1.2 DISPLAY 42
7.2 DIAGNOSIS 43
7.3 TEST MODE(HTV-C1) 45
7.4 INDEPENDENT OPERATION DIAGNOSIS46
7.5 BACKUP FUNCTION (HTV-C1) 47
7.6 BLOCK DIAGRAM 48
8.PANEL FACILITIES AND SPECIFICATIONS 50

PIONEER ELECTRONIC CORPORATION 4-1, Meguro 1-Chome, Meguro-ku, Tokyo 153-8654, Japan
PIONEER ELECTRONICS SERVICE, INC. P.O. Box 1760, Long Beach, CA 90801-1760, U.S.A.
PIONEER ELECTRONIC (EUROPE) N.V. Haven 1087, Keetberglaan 1, 9120 Melsele, Belgium
PIONEER ELECTRONICS ASIACENTRE PTE. LTD. 253 Alexandra Road, #04-01, Singapore 159936

©PIONEER ELECTRONIC CORPORATION 1998

T–ZZR NOV. 1998 Printed in Japan

1. SAFETY INFORMATION

This service manual is intended for qualified service technicians; it is not meant for the casual do-it-yourselfer. Qualified technicians have the necessary test equipment and tools, and have been trained to properly and safely repair complex products such as those covered by this manual.
Improperly performed repairs can adversely affect the safety and reliability of the product and may void the warranty. If you are not qualified to perform the repair of this product properly and safely, you should not risk trying to do so and refer the repair to a qualified service technician.

WARNING
This product contains lead in solder and certain electrical parts contain chemicals which are known to the state of California to cause cancer, birth defects or other reproductive harm.

Health & Safety Code Section 25249.6 – Proposition 65

NOTICE
(FOR CANADIAN MODEL ONLY)
Fuse symbols (fast operating fuse) and/or (slow operating fuse) on PCB indicate that replacement parts must be of identical designation.

REMARQUE
(POUR MODÈLE CANADIEN SEULEMENT)
Les symboles de fusible (fusible de type rapide) et/ou (fusible de type lent) sur CCI indiquent que les pièces de remplacement doivent avoir la même désignation.

(FOR USA MODEL ONLY)

1. SAFETY PRECAUTIONS

The following check should be performed for the continued protection of the customer and service technician.

LEAKAGE CURRENT CHECK

Measure leakage current to a known earth ground (water pipe, conduit, etc.) by connecting a leakage current tester such as Simpson Model 229-2 or equivalent between the earth ground and all exposed metal parts of the appliance (input/output terminals, screwheads, metal overlays, control shaft, etc.). Plug the AC line cord of the appliance directly into a 120V AC 60 Hz outlet and turn the AC power switch on. Any current measured must not exceed 0.5 mA.

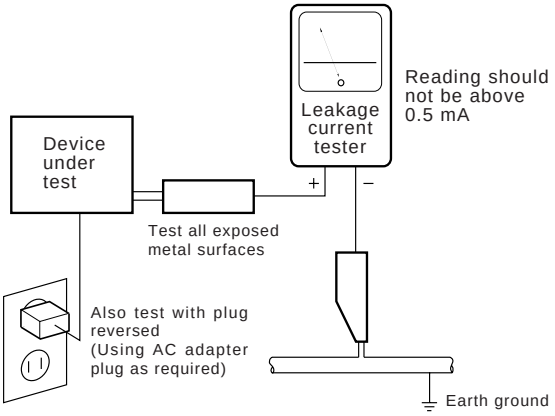

AC Leakage Test

ANY MEASUREMENTS NOT WITHIN THE LIMITS OUTLINED ABOVE ARE INDICATIVE OF A POTENTIAL SHOCK HAZARD AND MUST BE CORRECTED BEFORE RETURNING THE APPLIANCE TO THE CUSTOMER.

2. PRODUCT SAFETY NOTICE

Many electrical and mechanical parts in the appliance have special safety related characteristics. These are often not evident from visual inspection nor the protection afforded by them necessarily can be obtained by using replacement components rated for voltage, wattage , etc. Replacement parts which have these special safety characteristics are identified in this Service Manual.

Electrical components having such features are identified by marking with a ⚠ on the schematics and on the parts list in this Service Manual.
The use of a substitute replacement component which does not have the same safety characteristics as the PIONEER recommended replacement one, shown in the parts list in this Service Manual, may create shock, fire, or other hazards.

Product Safety is continuously under review and new instructions are issued from time to time. For the latest information, always consult the current PIONEER Service Manual. A subscription to, or additional copies of, PIONEER Service Manual may be obtained at a nominal charge from PIONEER.

2. EXPLODED VIEWS AND PARTS LIST

NOTES :
- *Parts marked by " NSP " are generally unavailable because they are not in our Master Spare Parts List.*
- *The ⚠ mark found on some component parts indicates the importance of the safety factor of the part. Therefore, when replacing, be sure to use parts of identical designation.*
- *Screw adjacent to ▼ mark on the product are used for disassembly.*

2.2 HTV-SW1

2.1.1 PACKING

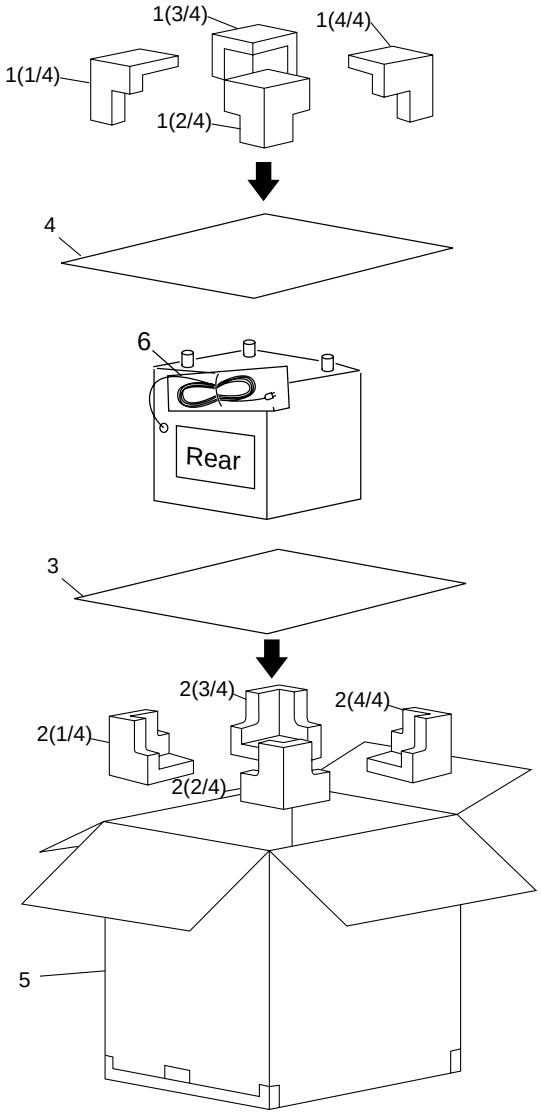

● PACKING PARTS LIST(HTV-SW1)

Mark	No.	Description	Part No.
	1	Protector Top	SHA2140
	2	Protector Bottom	SHA2141
	3	Protection Sheet S6	SHC1726
	4	Protection Sheet S7	SHC1727
	5	Packing Case	SHG2124
NSP	6	Polyethylene Bag (0.03 × 115 × 270)	SHL1227

2.1.2 EXTERIOR (Cabinet HTV-SW1)

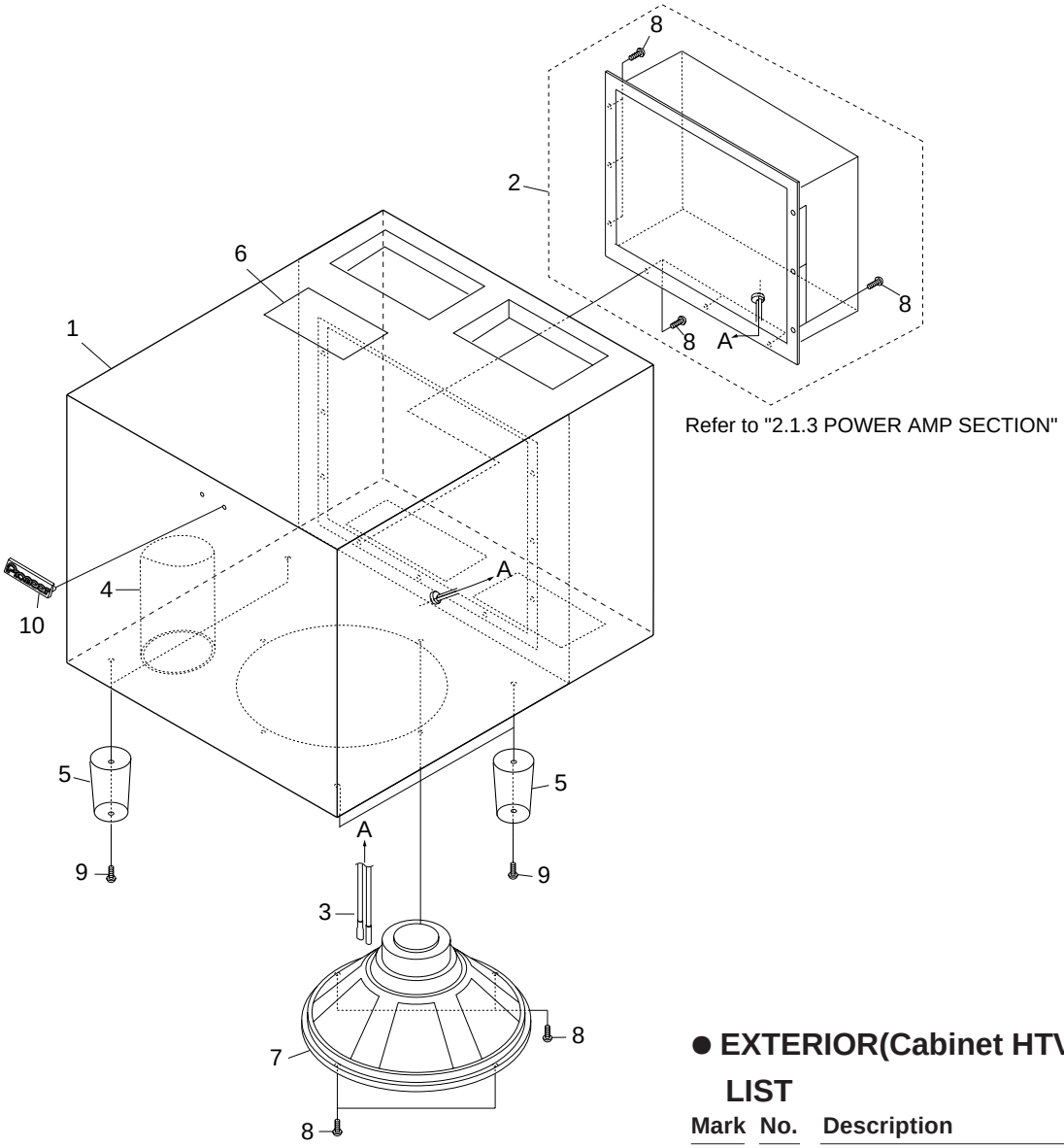

● EXTERIOR(Cabinet HTV-SW1) PARTS LIST

Mark	No.	Description	Part No.
NSP	1	Cabinet	SMM1821
NSP	2	Power AMP	HTV-A1/DDXJ
	3	Connecting Cord	SDF1072
NSP	4	Paper Port tube	SMR1283
	5	Foot	SNK2274
NSP	6	CAUTION LABEL	SRR1012
	7	Speaker	Q20EU82-52F
	8	Screw	BYC40P200FZB
	9	Bind Tapping Screw	BYC40P300FZK
NSP	10	Logo 40	SAM1452

2.1.3 EXTERIOR (POWER AMP HTV-A1)

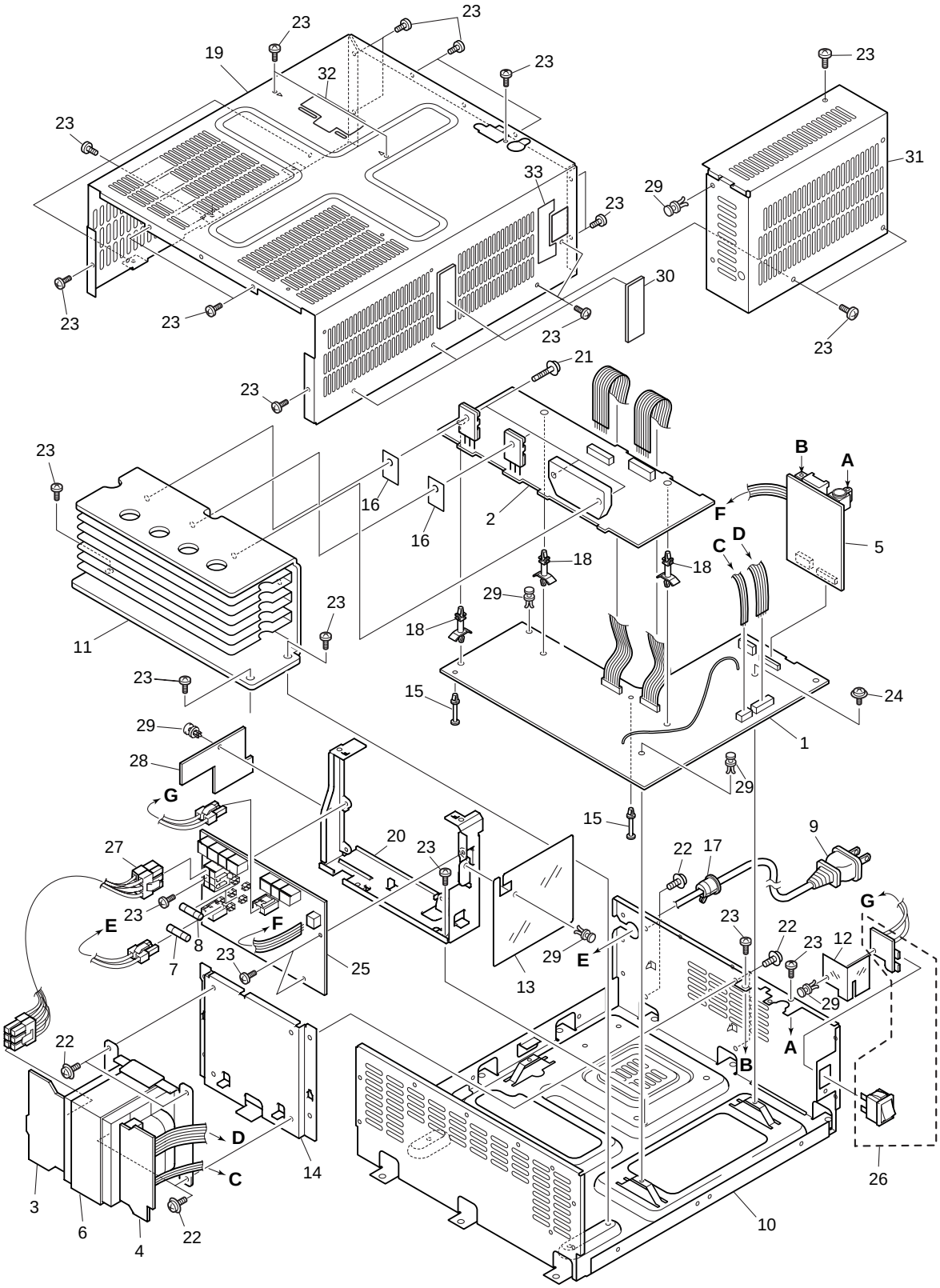

● EXTERIOR(POWER AMP HTV-A1) PARTS LIST

Mark	No.	Description	Part No.
	1	AFPS ASSY	AWU7262
	2	PAMP ASSY	AWU7263
	3	PT PRI ASSY	AWU7264
	4	PT SEC ASSY	AWU7265
	5	JACK ASSY	AWU7257
⚠	6	Power Transformer (T1)	ATS7228
⚠	7	Fuse (FU1 : T3.15AL250V)	REK1027
⚠	8	Fuse (FU2, 3 : T1.6AL250V)	REK1024
⚠	9	AC Power Cord	VDG1058
NSP	10	Chassis	ANA7093
NSP	11	Heat Sink	ANH7079
	12	PW Barrier	AEC7157
	13	ST Barrier	AEC7155
	14	TRANS Frame	ANG7216
	15	Mini Card Spacer	AEC7143
	16	Mica Sheet	AEE7010
	17	Strain Relief	CM-22B
NSP	18	PCB Holder	PNW2174
	19	Bonnet Case	AZN7214
	20	PCB Stay	ANG7217
	21	Screw	ABA-258
	22	Screw	ASZ40P060FMC
	23	Screw	BBZ30P080FMC
	24	Screw	IBZ30P080FMC
	25	STANDBY PT Assy	AWU7267
	26	PW SWITCH Assy	AWU7259
⚠	27	Connector Assy 6P	ADX7245
NSP	28	Cord Support Assy	• • • • •
	29	Push Rivet	AEC7149
	30	Cushion	AEB7123
	31	Heat Protector	AEC7136
NSP	32	Volt Selector Label	AAX7667
NSP	33	POWER SW Label	AAX7669

2.2 HTV-C1

2.2.1 PACKING

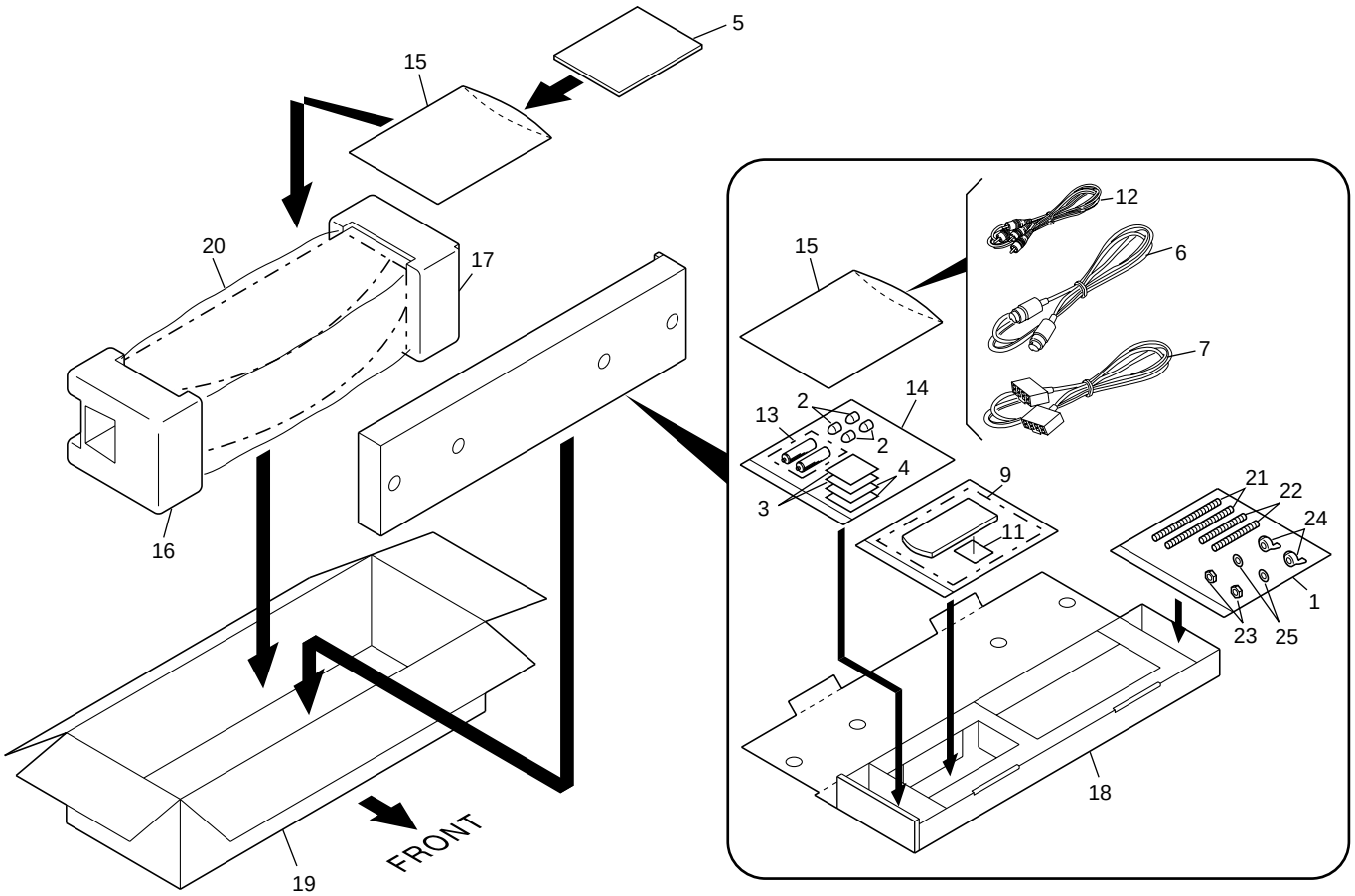

● PACKING PARTS LIST

Mark	No.	Description	Part No.
NSP	1	MOUNT ASSY	AEA7021
	2	Bolt Cap	AEB7111
	3	Velcro Hook(BLACK)	AED7028
	4	Velcro Loop(BLACK)	AED7029
	5	Operating Instructions (English/Spanish/Portuguese /Chinese)	ARE7183
	6	8P DIN Cable	ADE7023
NSP	7	Speaker Cable 6P	ADX7239
	8	• • • • •	
	9	Remote Control Unit (CU-HT007)	AXD7186
	10	• • • • •	
	11	Battery Cover	RZN1156
	12	Output Cable (L = 1.5m)	VDE1052

Mark	No.	Description	Part No.
NSP	13	Batteris(R06P,AA)	VEM-013
NSP	14	Polyethylene Bag	Z21-033
	15	Polyethylene Bag (0.03 × 230 × 340)	Z21-038
	16	L Protector	AHA7209
	17	R Protector	AHA7210
	18	Paper Protector	AHA7217
	19	Packing Case	AHD7646
	20	Packing Sheet	AHG7053
	21	Bolt(M6X140)	ABA7042
	22	Bolt(M6X90)	ABA7041
	23	Nut	NA60FZK
	24	Wing Nut	NR60FZK
	25	Washer	WB60FZK

2.2.2 MAIN SECTION

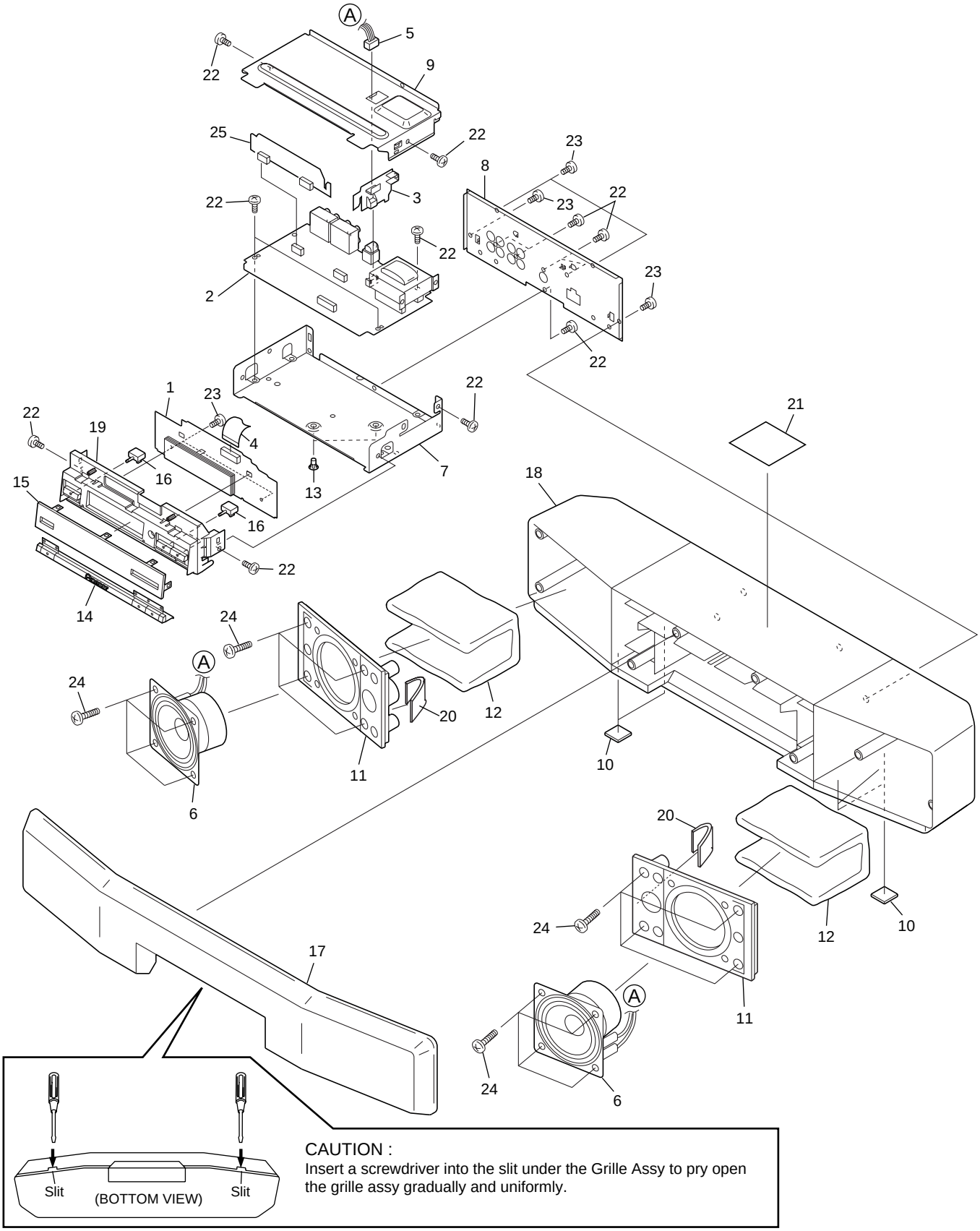

● MAIN SECTION PARTS LIST

Mark	No.	Description	Part No.
	1	DISPLAY Assy	AWU7260
	2	MAIN Assy	AWU7261
	3	TERMINAL Assy	AWU7251
	4	21P FFC/30V	ADD7124
	5	Cable Assy 4P	ADX7240
	6	Speaker	D87DU61-51F
NSP	7	PCB Bracket	ANA7068
	8	Rear Panel	ANC7716
NSP	9	Shield Cover	ANK7040
	10	Cushion 3	AEB7110
NSP	11	Baffle	AMD7006
NSP	12	Acoustic Absorbent	AMT7001
	13	Card Spacer	DNK2769
	14	Button	AAD7498
	15	Display Panel	AAK7595
	16	Lens	AAK7551
	17	Grille Assy	AAS7001
NSP	18	Rear Case	AMC7028
	19	Sub Panel	AMD7003
	20	Acoustic Shield	AEB7130
NSP	21	Founding Caution	AAX7660
	22	Screw	BBZ30P080FMC
	23	Screw	VPZ30P080FMC
	24	Screw	BPZ40P140FZK
	25	INPUT LEV. Assy	AWU7252

3. SCHEMATIC DIAGRAM

3.1 HTV-A1

3.1.1 OVERALL CONNECTIONS

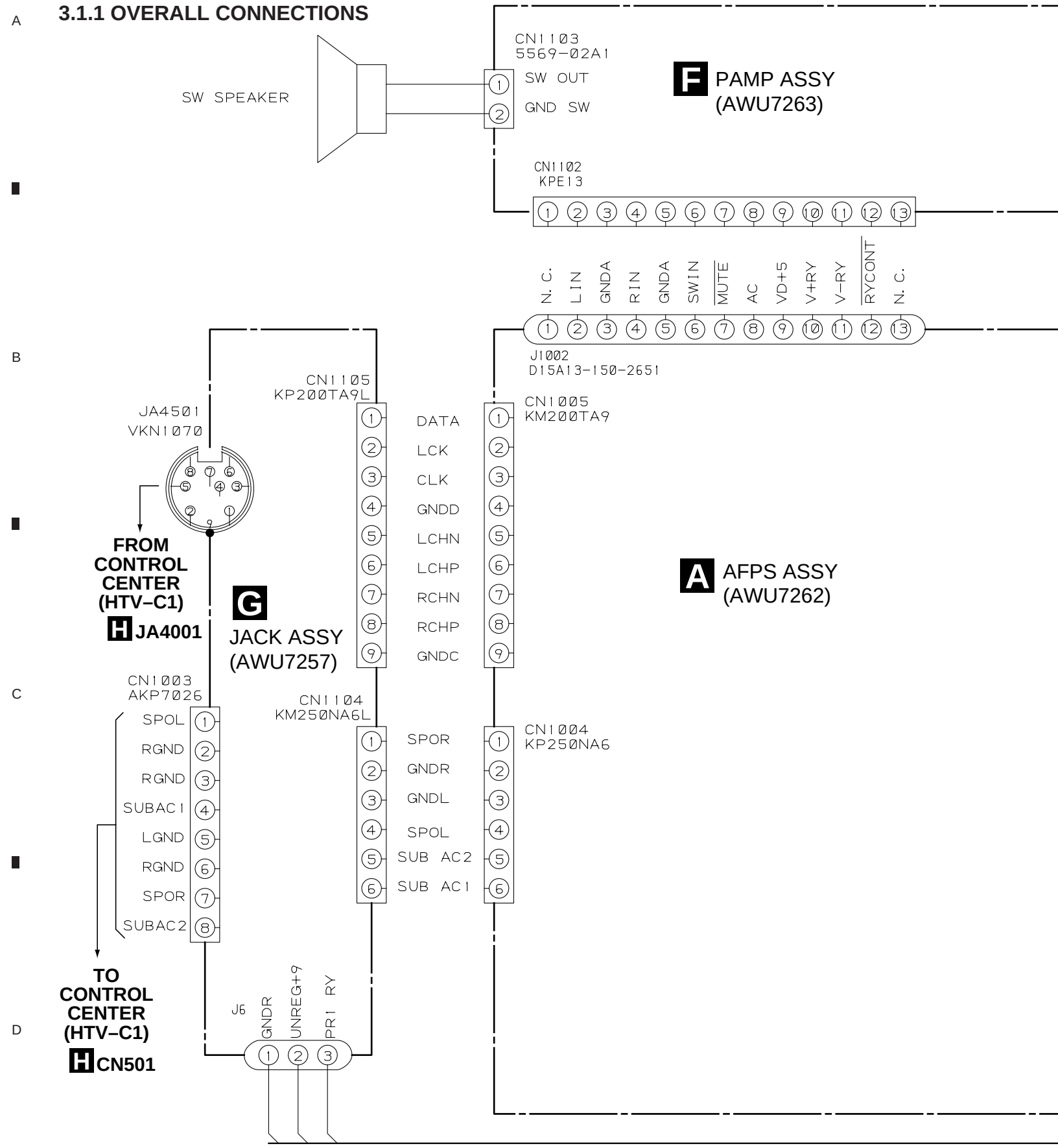

Note : When ordering service parts, be sure to refer to "EXPLODED VIEWS and PARTS LIST" or "PCB PARTS LIST".

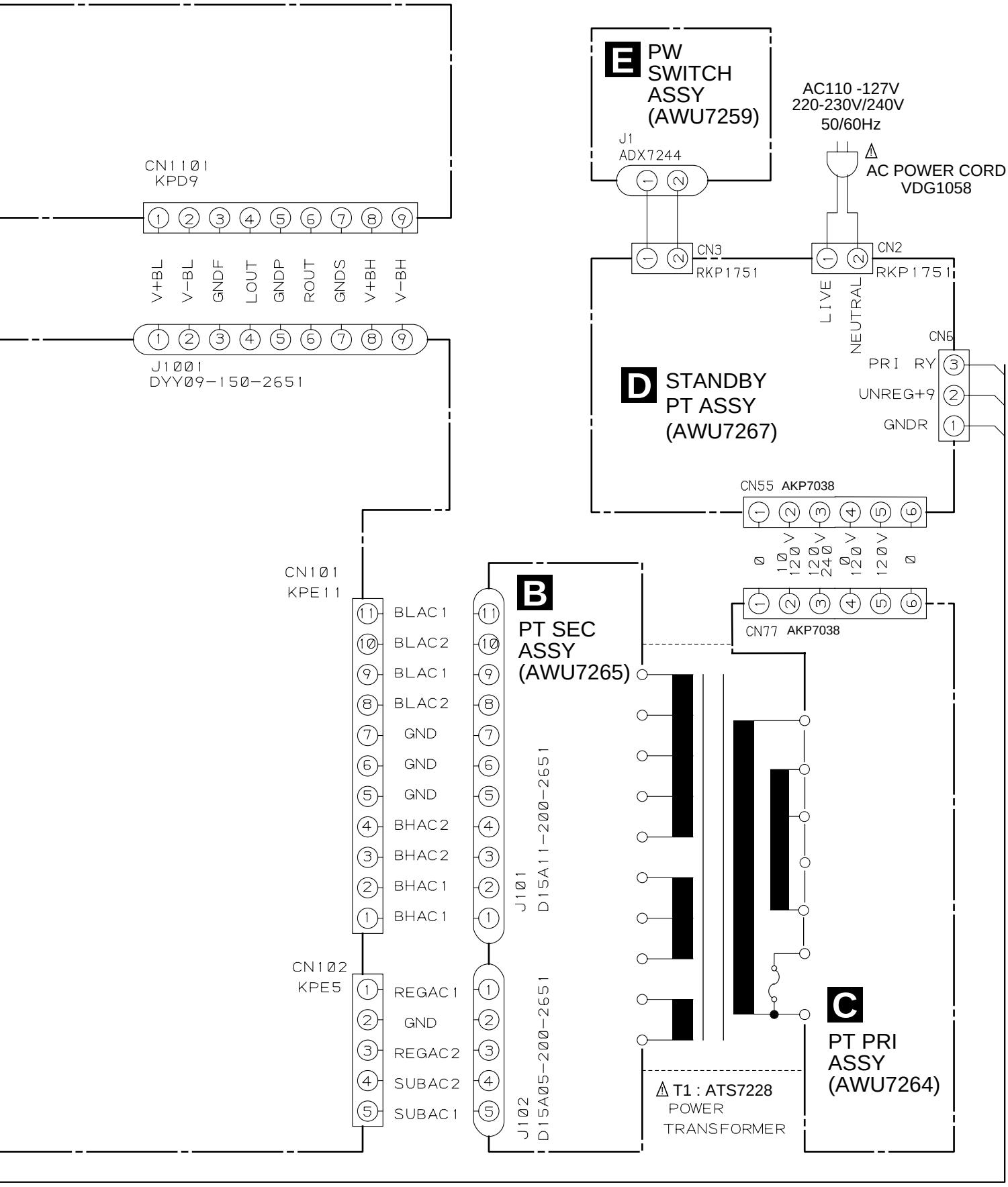

3.1.2 AFPS, PT SEC, PT PRI, STANDBY PT, and PW SWITCH ASSY

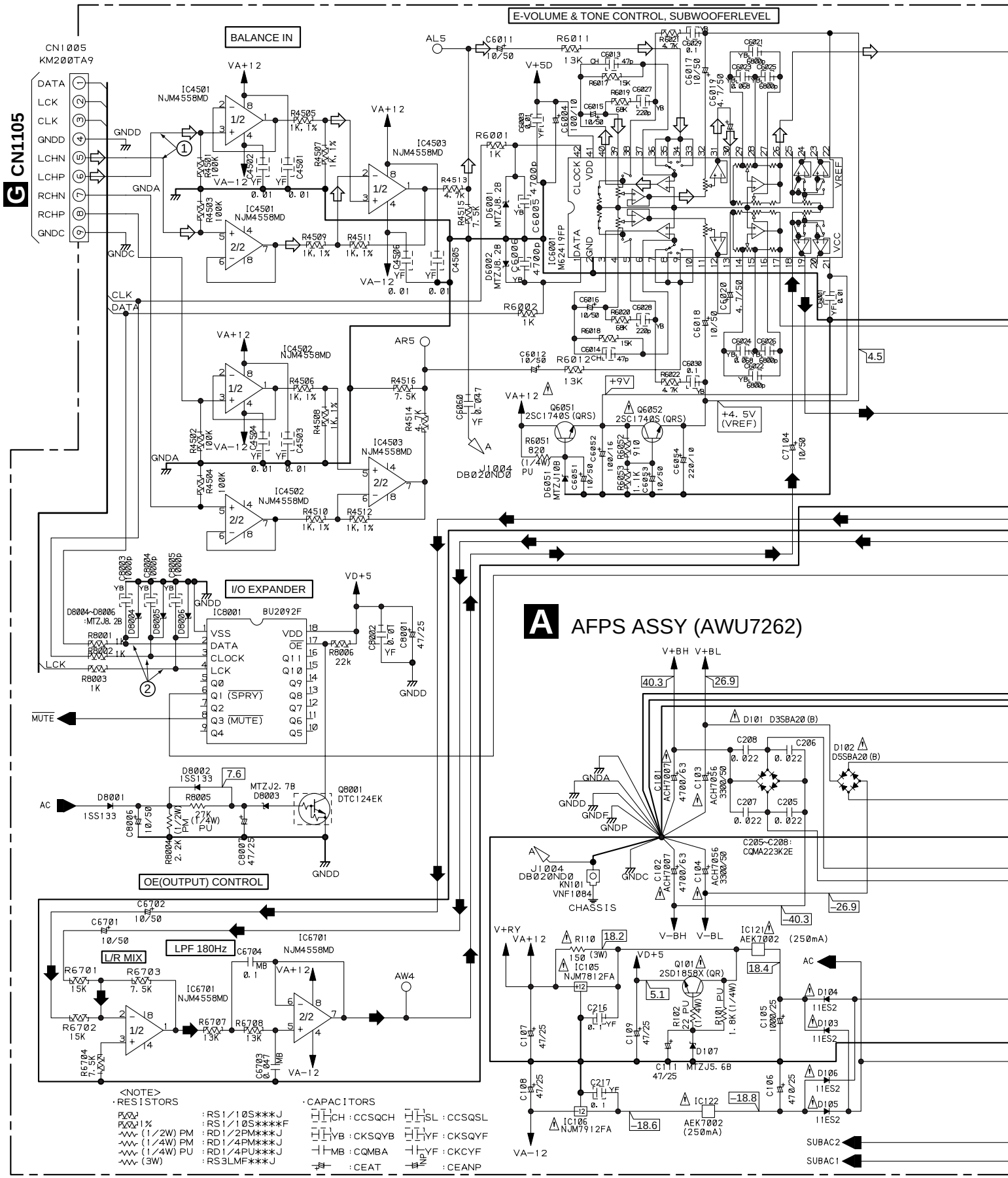

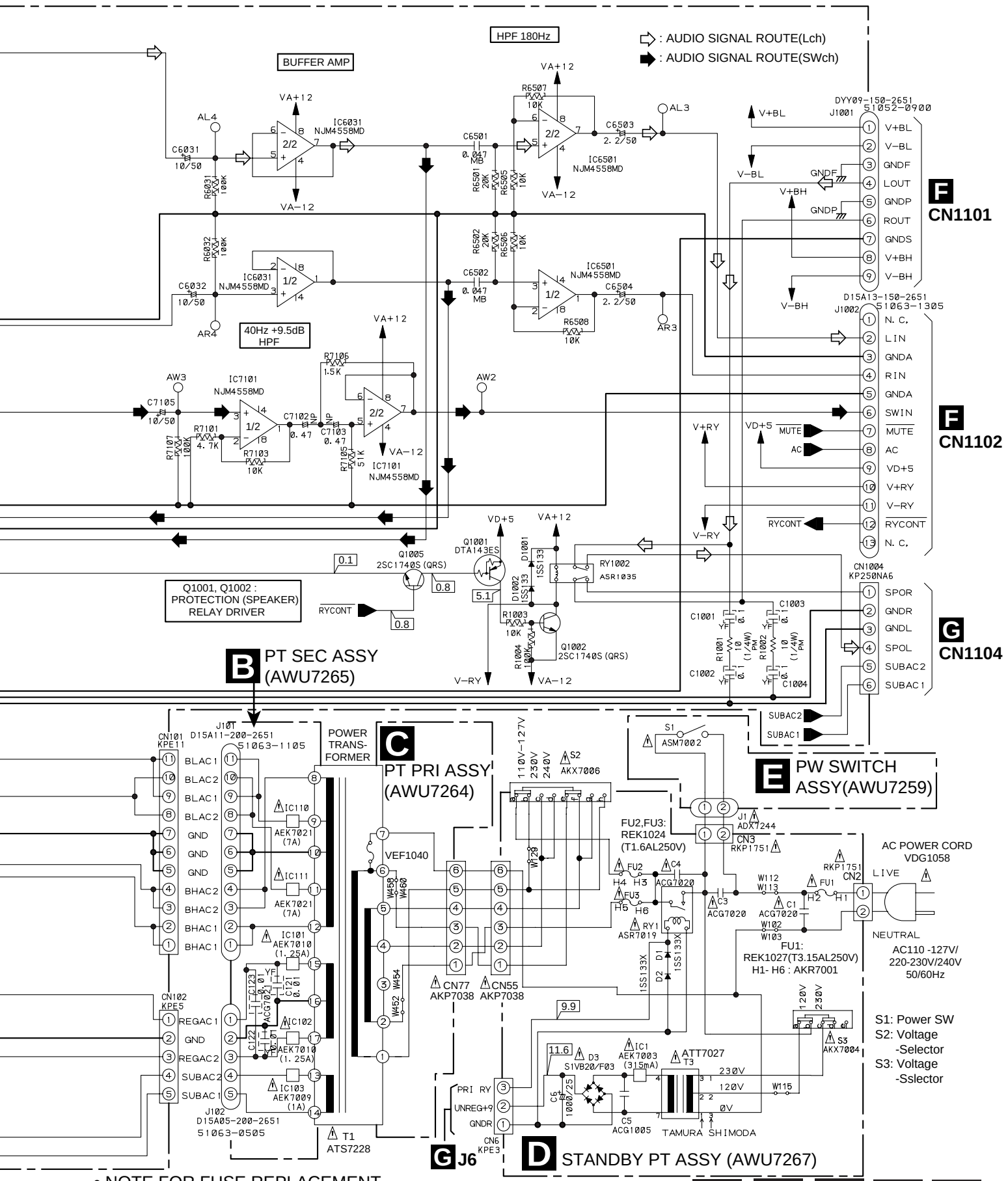

• NOTE FOR FUSE REPLACEMENT

CAUTION - FOR CONTINUED PROTECTION AGAINST RISK OF FIRE, REPLACE WITH SAME TYPE AND RATINGS ONLY.

3.1.3 PAMP ASSY

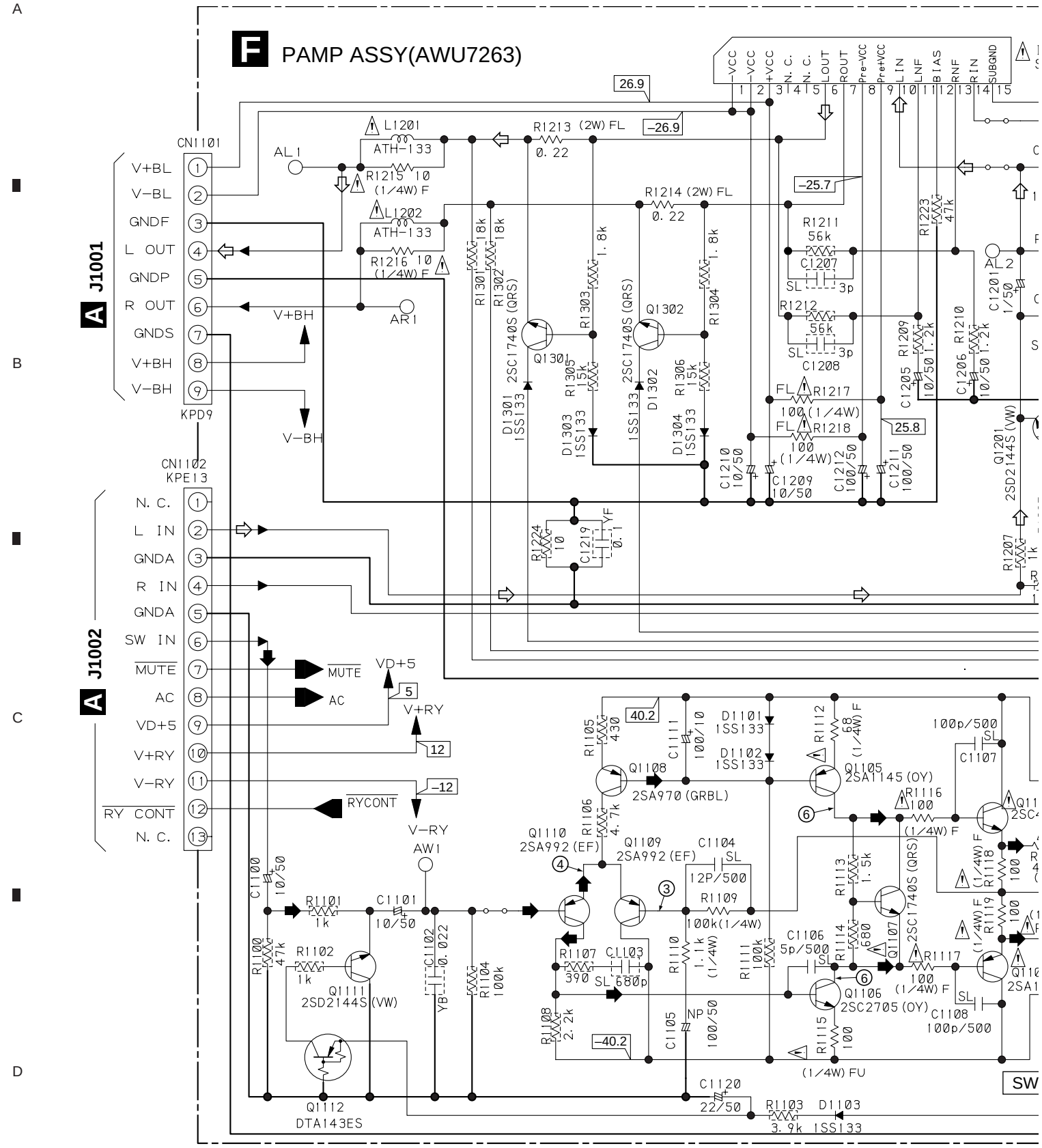

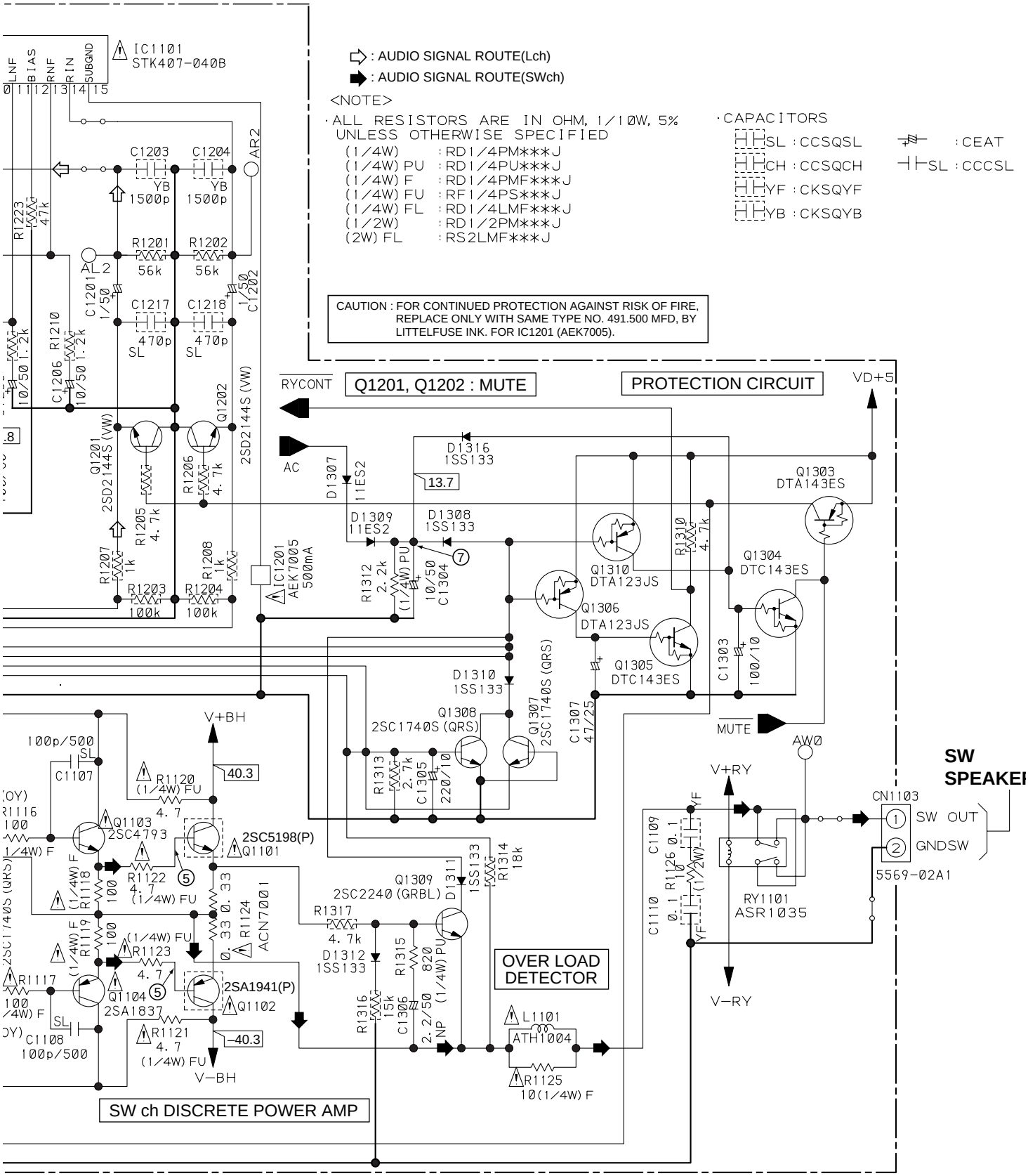
IC1101
STK407-040B
LNF
BIAS
RNF
RIN
SUBGND
: AUDIO SIGNAL ROUTE(Lch)
: AUDIO SIGNAL ROUTE(SWch)
<NOTE>
·ALL RESISTORS ARE IN OHM, 1/10W, 5% UNLESS OTHERWISE SPECIFIED
(1/4W) : RD1/4PM***J
(1/4W) PU : RD1/4PU***J
(1/4W) F : RD1/4PMF***J
(1/4W) FU : RF1/4PS***J
(1/4W) FL : RD1/4LMF***J
(1/2W) : RD1/2PM***J
(2W) FL : RS2LMF***J
·CAPACITORS
SL : CCSQSL
CH : CCSQCH
YF : CKSQYF
YB : CKSQYB
: CEAT
SL : CCCSL
CAUTION : FOR CONTINUED PROTECTION AGAINST RISK OF FIRE, REPLACE ONLY WITH SAME TYPE NO. 491.500 MFD, BY LITTELFUSE INK. FOR IC1201 (AEK7005).
Q1201, Q1202 : MUTE
PROTECTION CIRCUIT
RYCONT
VD+5
AC
MUTE
AW0
V+BH
V−BH
V+RY
V−RY
SW SPEAKER
CN1103
SW OUT
GNDSW
5569-02A1
RY1101
ASR1035
OVER LOAD DETECTOR
SW ch DISCRETE POWER AMP
2SC5198(P)
2SA1941(P)
40.3
−40.3
13.7

3.1.4 JACK ASSY

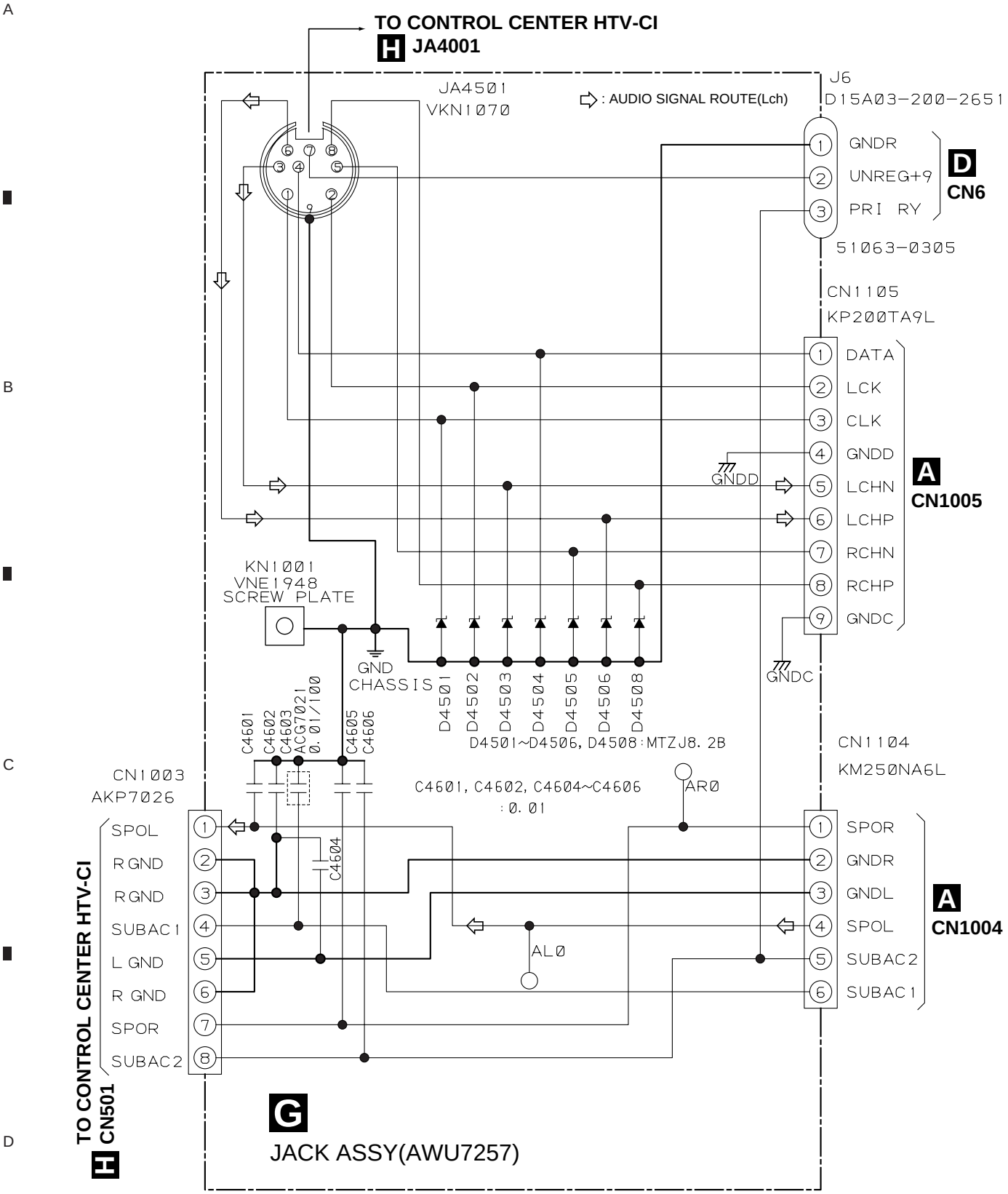

Note: The encircled numbers denote measuring point in the schematic diagram.

A Waveforms (HTV-A1)

① CN1005-5 pin (LCHN), 6 pin (LCHP)
V : 20mV/div. H : 0.2mS/div.
Measurement condition :
Input a 1 kHz, 200mV signal to INPUT 1(2)

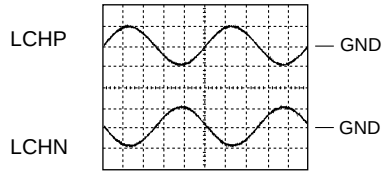

② IC8001- 2 pin (DATA), 3 pin (CLOCK), 4 pin (LCK) V: 0.5V/div. H: 1mS/div.
Measurement condition : Volume Min → 1

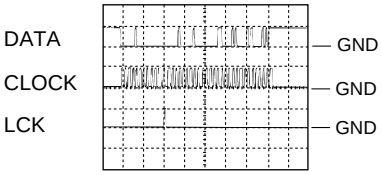

F Waveforms (HTV-A1)

③ Q1109 Base
V : 20mV/div. H : 5mS/div.
Measurement condition :
SW ch output signal f=100Hz, 1W

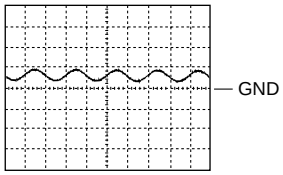

④ Q1110 Emitter
V : 50mV/div. H : 5mS/div.
Measurement condition :
SW ch output signal f=100Hz, 1W

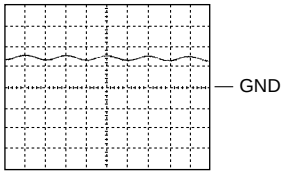

⑤ Q1101 Base, Q1102 Base
V : 0.5V/div. H : 5mS/div.
Measurement condition :
SW ch output signal f=100Hz, 1W

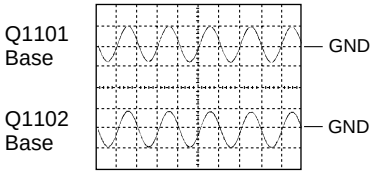

⑥ Q1105 Collector, Q1106 Collector
V : 0.5V/div. H : 5mS/div.
Measurement condition :
SW ch output signal f=100Hz, 1W

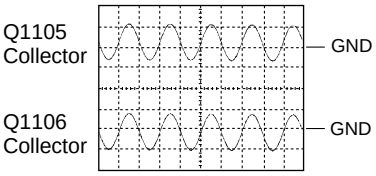

⑦ D1309 Cathode
V : 1V/div. H : 10mS/div.

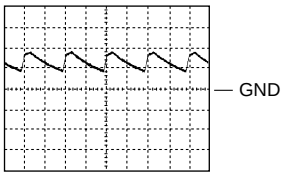

K Waveforms (HTV-C1)

① IC5001-45 pin (P1)
V : 1V/div. H : 1mS/div.

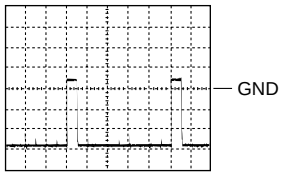

② IC5001-62 pin (1G)
V : 1V/div. H : 1mS/div.

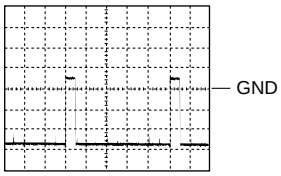

③ CN3001-6 pin (CLK), 7 pin (DATA), 8 pin (LCK) V: 0.5V/div. H: 1mS/div.
Measurement condition : Volume Min → 1

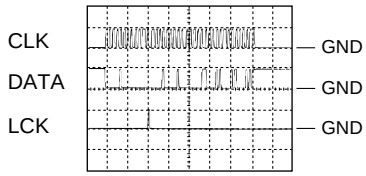

H Waveforms (HTV-C1)

④ CN3001-9 pin (SCK), 10 pin (RVDT), 11 pin (REDY)
V : 0.5V/div. H : 0.5mS/div.
Measurement condition :
SUR. MODE OFF → VD

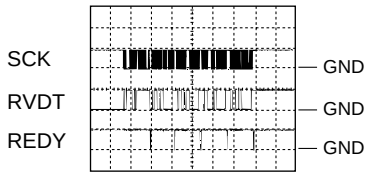

⑤ CN501-4 pin (AC1):CH1, 8 pin (AC2):CH2
V : CH1:2V/div. , CH2:0.5V/div.
H : 1mS/div.
Measurement condition :
POWER ON (Connect with HTV-A1)

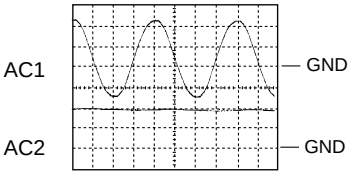

⑤ CN501-4 pin (AC1):CH1, 8 pin (AC2):CH2
V : CH1:2V/div. , CH2:0.5V/div.
H : 1mS/div.
Measurement condition :
STANDBY (Connect with HTV-A1)

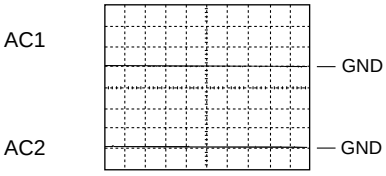

3.2 HTV-C1

3.2.1 OVERALL CONNECTIONS

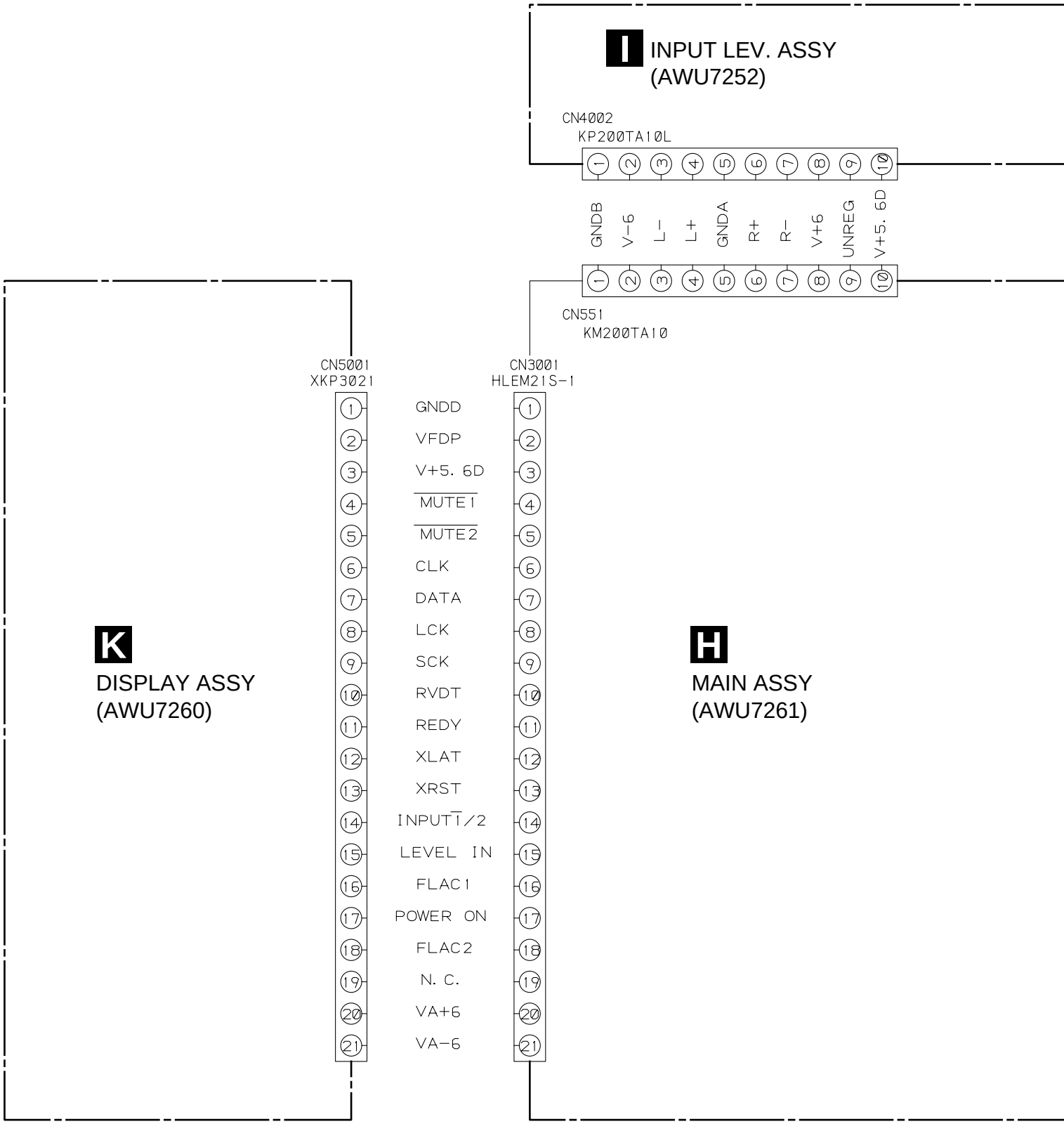

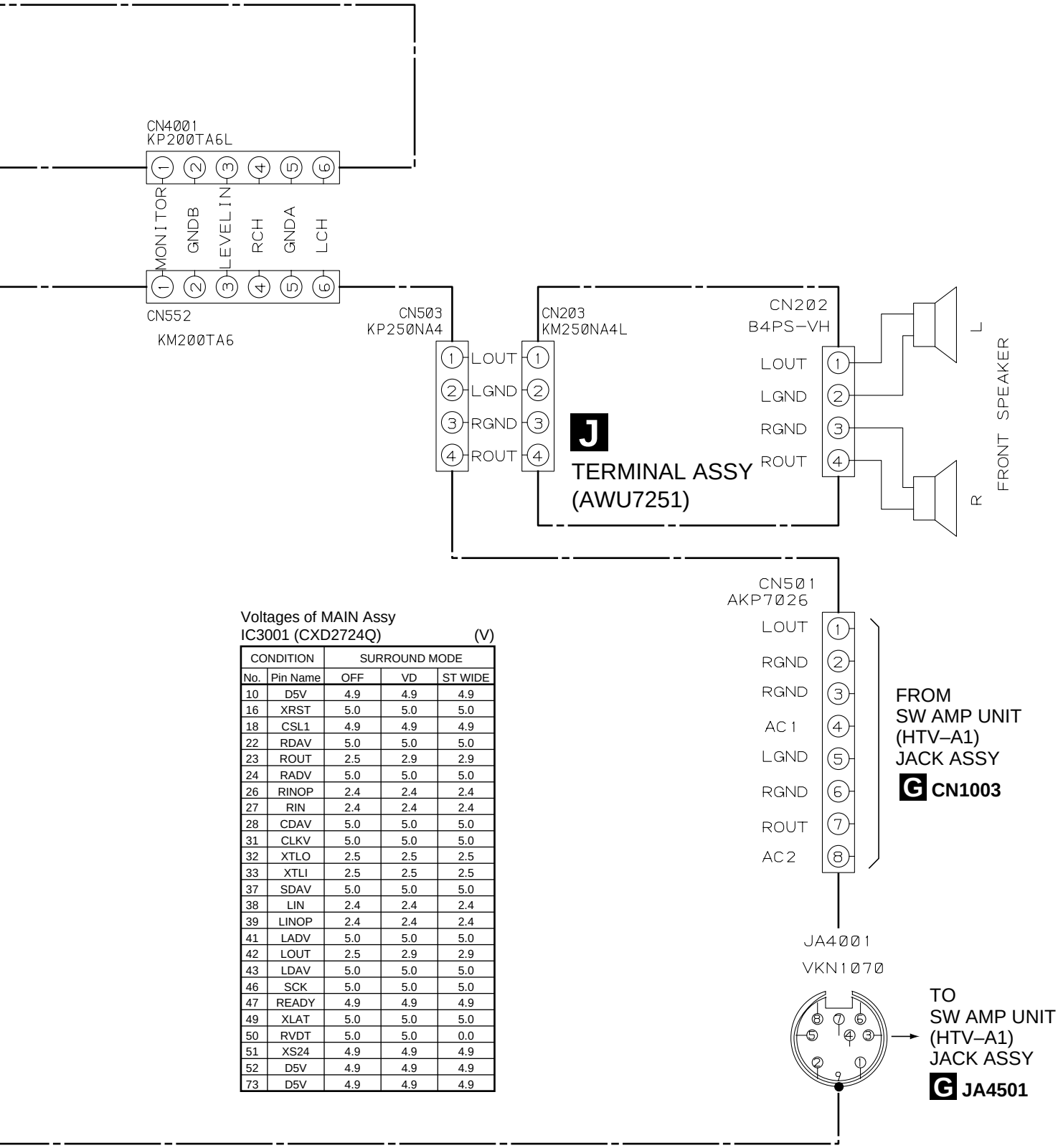

Voltages of MAIN Assy
IC3001 (CXD2724Q) (V)

CONDITION		SURROUND MODE		
No.	Pin Name	OFF	VD	ST WIDE
10	D5V	4.9	4.9	4.9
16	XRST	5.0	5.0	5.0
18	CSL1	4.9	4.9	4.9
22	RDAV	5.0	5.0	5.0
23	ROUT	2.5	2.9	2.9
24	RADV	5.0	5.0	5.0
26	RINOP	2.4	2.4	2.4
27	RIN	2.4	2.4	2.4
28	CDAV	5.0	5.0	5.0
31	CLKV	5.0	5.0	5.0
32	XTLO	2.5	2.5	2.5
33	XTLI	2.5	2.5	2.5
37	SDAV	5.0	5.0	5.0
38	LIN	2.4	2.4	2.4
39	LINOP	2.4	2.4	2.4
41	LADV	5.0	5.0	5.0
42	LOUT	2.5	2.9	2.9
43	LDAV	5.0	5.0	5.0
46	SCK	5.0	5.0	5.0
47	READY	4.9	4.9	4.9
49	XLAT	5.0	5.0	5.0
50	RVDT	5.0	5.0	0.0
51	XS24	4.9	4.9	4.9
52	D5V	4.9	4.9	4.9
73	D5V	4.9	4.9	4.9

3.2.2 MAIN, INPUT LEV. and TERMINAL ASSY

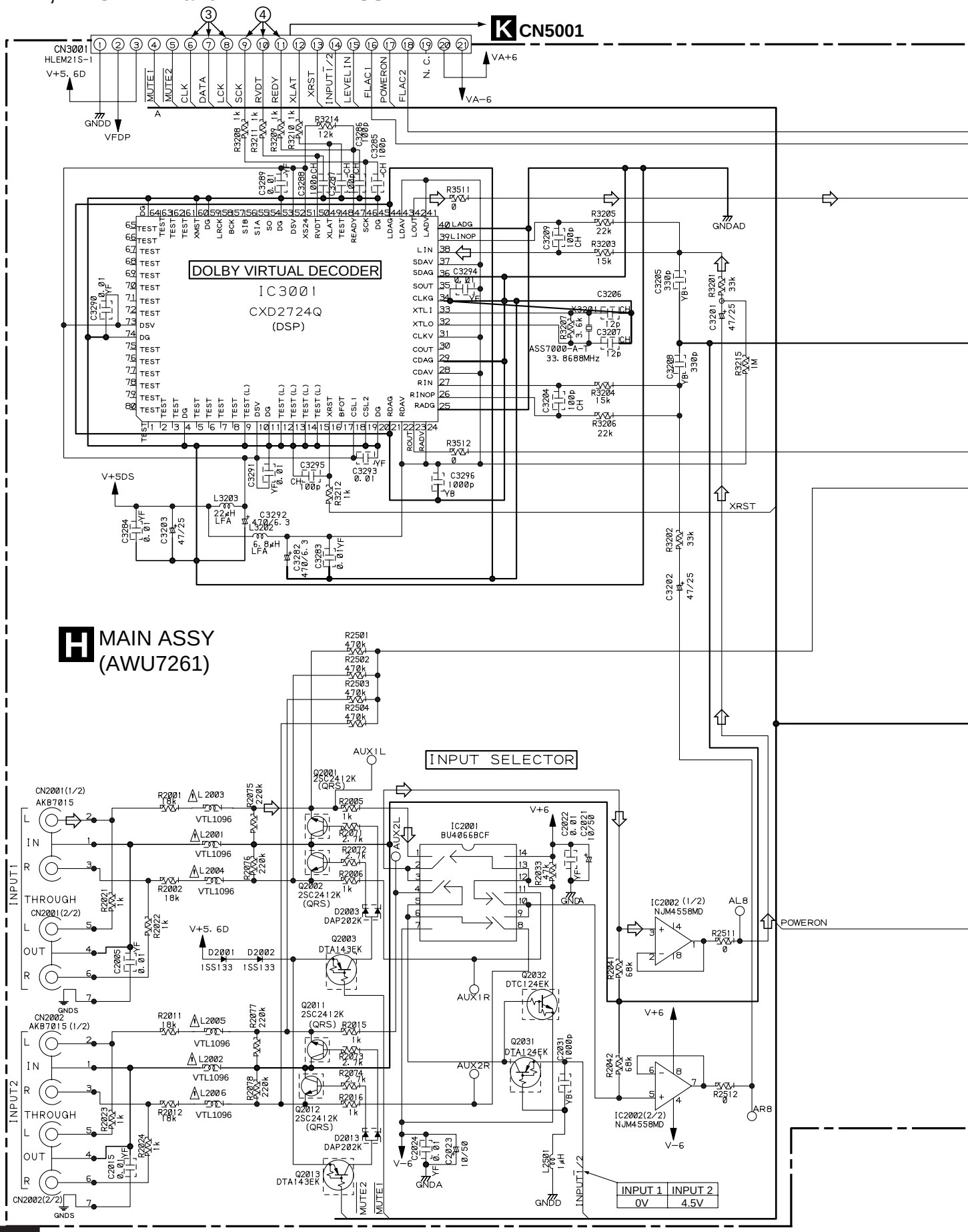

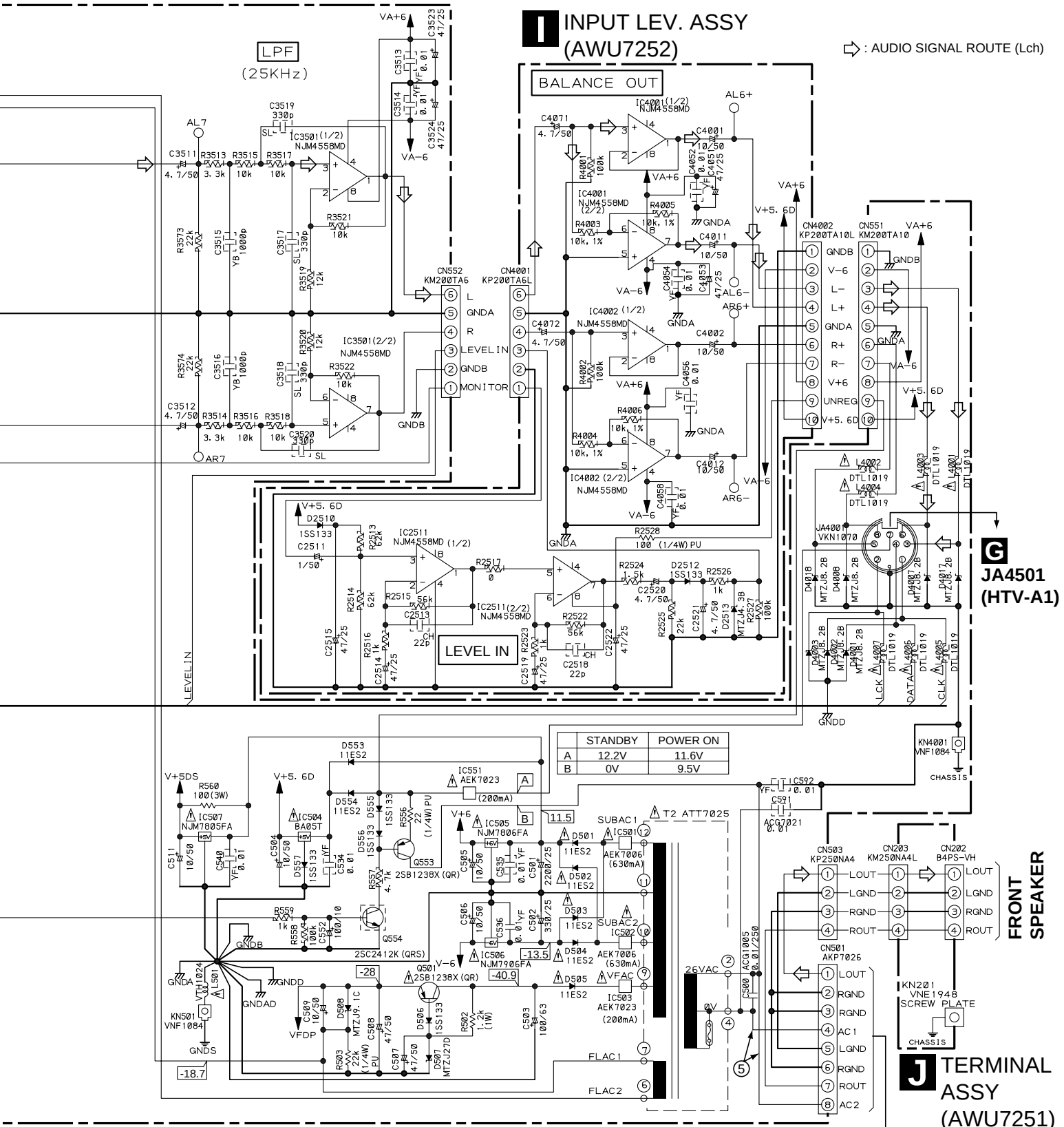

	STANDBY	POWER ON
A	12.2V	11.6V
B	0V	9.5V

<NOTE>

· RESISTORS

5%	: RS1/10S***J
1%	: RS1/10S****F
(1/4W) PU	: RD1/4PU***J
(1W)	: RS1LMF***J
(3W)	: RS3LMF***J

· CAPACITORS

CH	: CCSQCH
YF	: CKSQYF
YB	: CKSQYB
SL	: CCSQSL
	: CEAT

3.2.3 DISPLAY ASSY

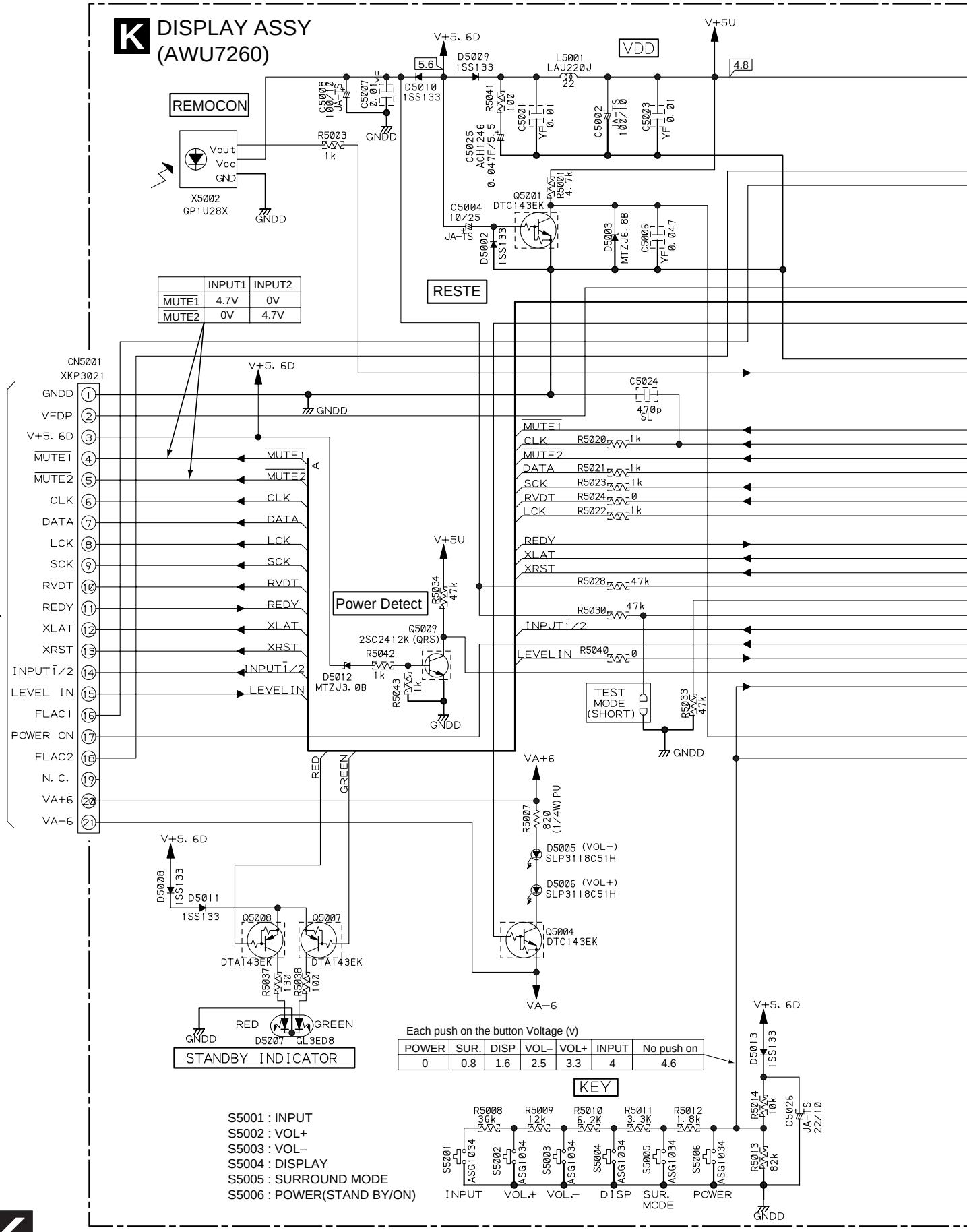

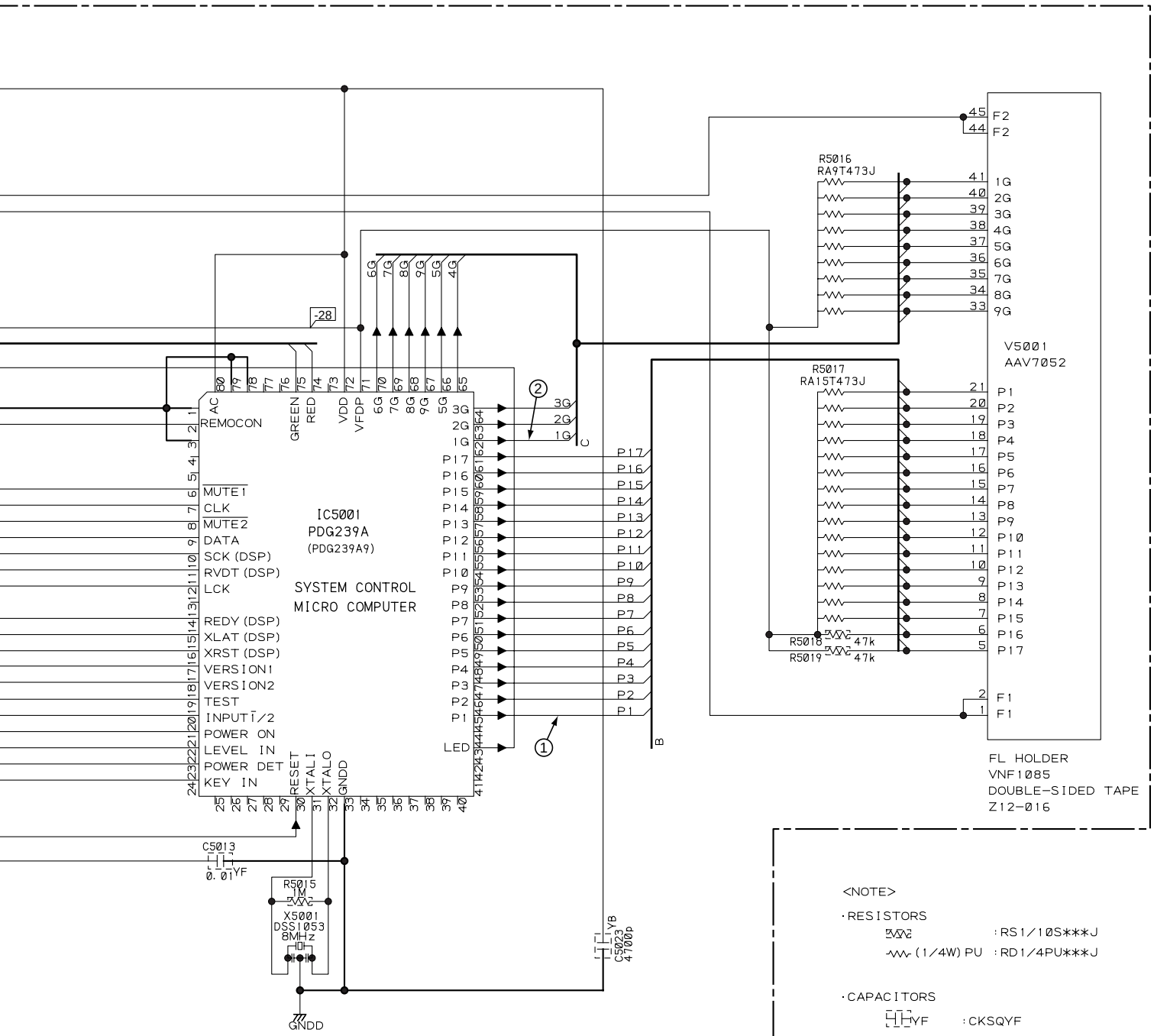

<NOTE>

· RESISTORS

	: RS1/10S***J
(1/4W) PU	: RD1/4PU***J

· CAPACITORS

YF	: CKSQYF
YB	: CKSQYB
SL	: CCSQSL
JA-TS	: CEAT

● In regard to the voltage at pin 22 of IC5001 (LEVEL IN)

- This terminal monitors the input signal level for operation of the automatic standby mode.
- When INPUT key (INPUT 2) is selected and -46dB V (about 5mV rms) is applied as input (input to both channels, freq. =1kHz), this terminal rises to about 0.8V DC (in case of both channels, -40 dB V, about 0.8V DC) and POWER ON is effected.

4. PCB CONNECTION DIAGRAM

4.1 HTV-A1

4.1.1 AFPS, PT SEC and PT PRI ASSY

NOTE FOR PCB DIAGRAMS :

1. Part numbers in PCB diagrams match those in the schematic diagrams.
2. A comparison between the main parts of PCB and schematic diagrams is shown below.

Symbol In PCB Diagrams	Symbol In Schematic Diagrams	Part Name
B C E	B C E B C E	Transistor
B C E	B C E B C E	Transistor with resistor
D G S	D G S D G S	Field effect transistor
		Resistor array
		3-terminal regulator

3. The parts mounted on this PCB include all necessary parts for several destinations.
   For further information for respective destinations, be sure to check with the schematic diagram.
4. View point of PCB diagrams.

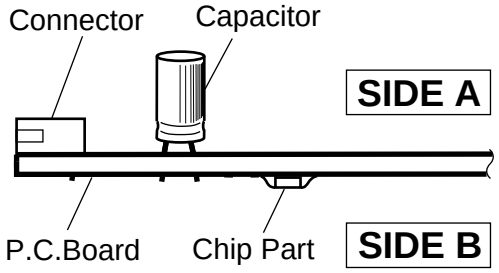

A AFPS ASSY

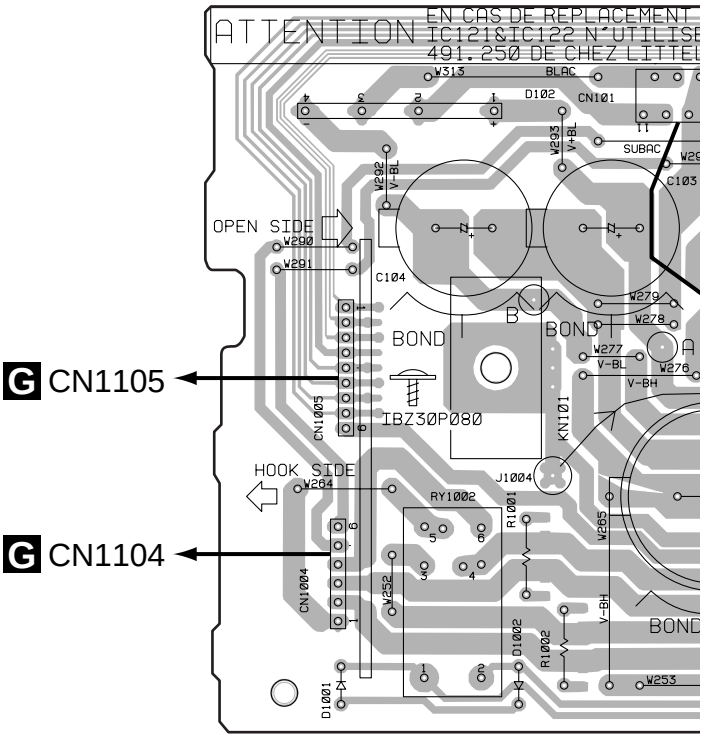

B PT SEC ASSY

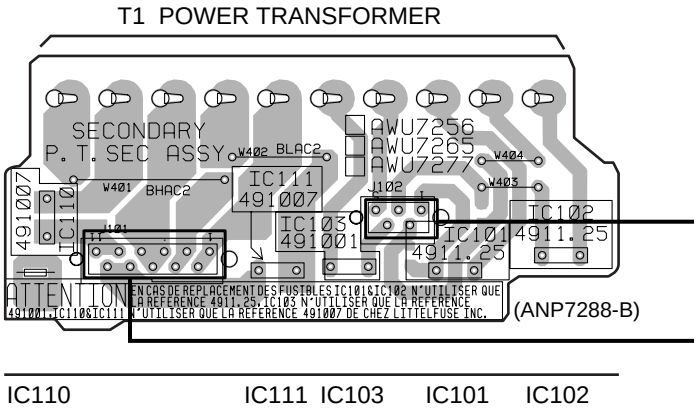

C PT PRI ASSY

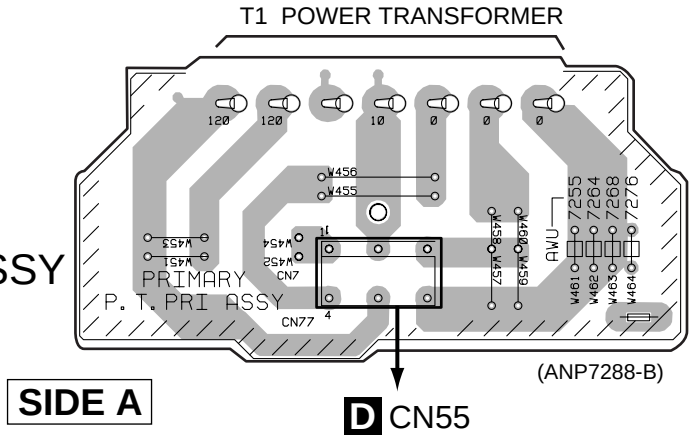

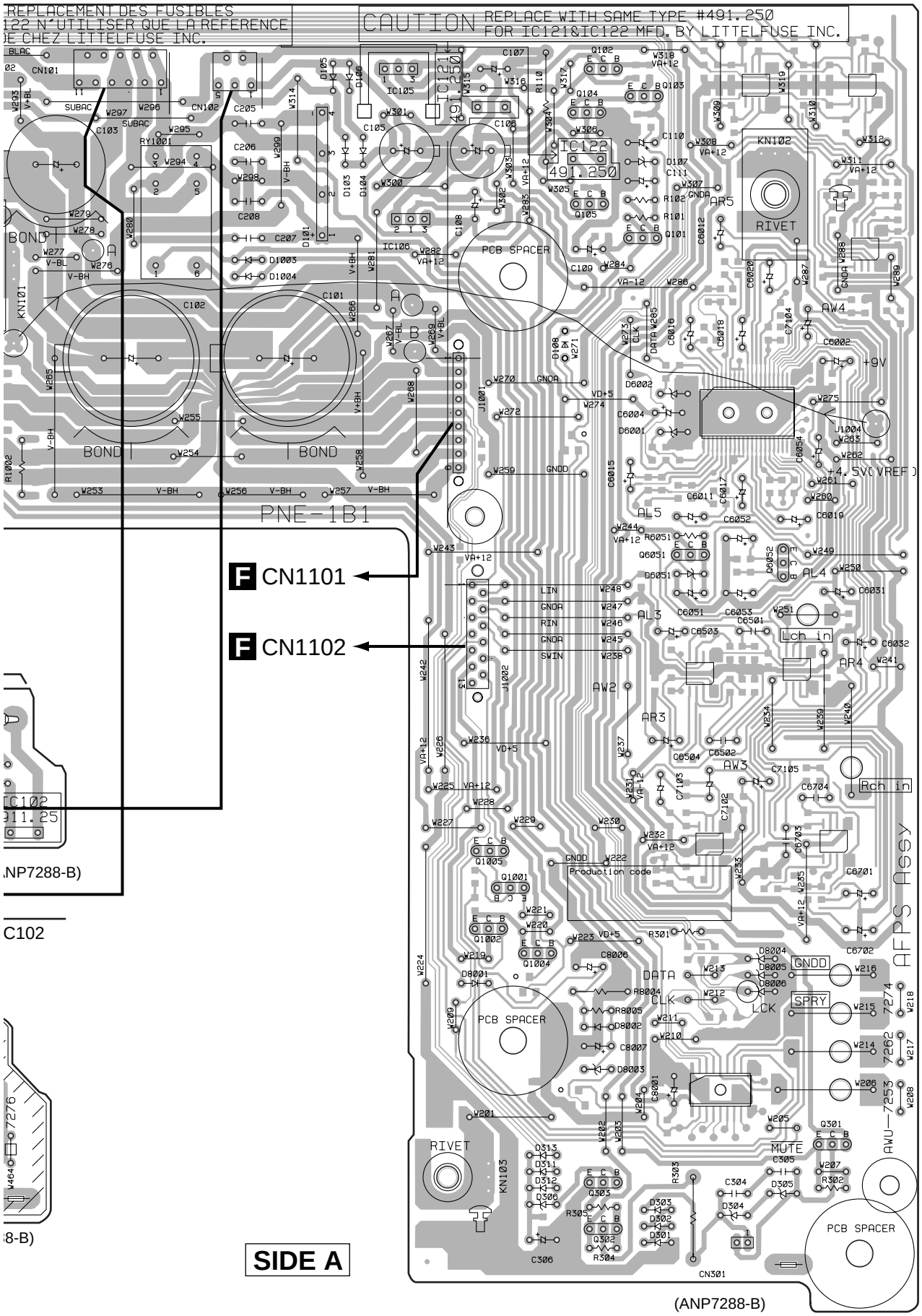

Q102
IC105 Q103
IC121 Q104

IC122

Q105
IC106
Q101

Q6051
Q6052

Q1005
Q1001

Q1002
Q1004

Q301

Q303

Q302

A AFPS ASSY

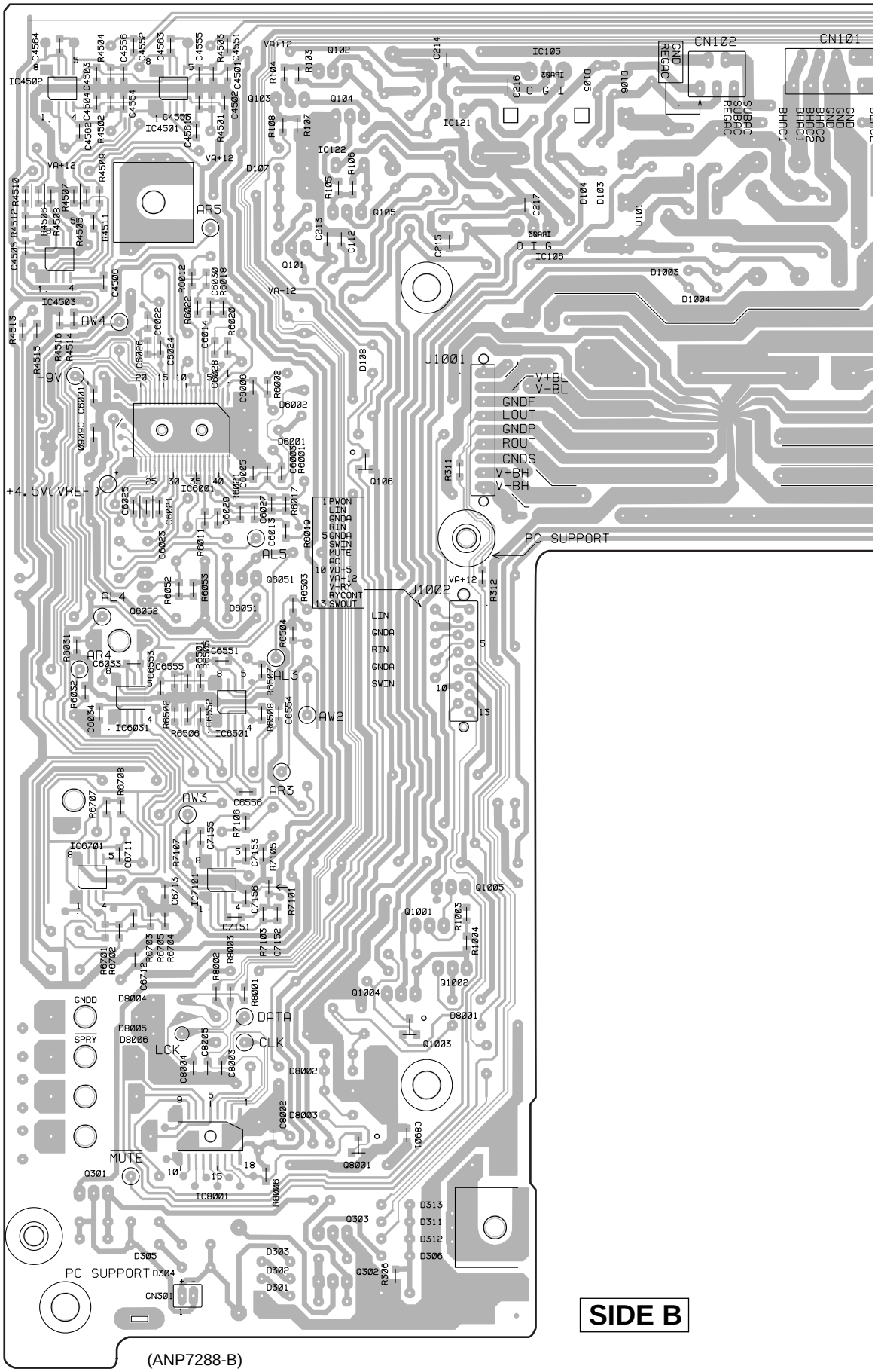
IC4502
IC4501
IC4503
IC6001
Q106
IC6031
IC6501
IC6701
IC7101
Q1003
IC8001
Q8001
CN102
CN101
J1001
J1002
PC SUPPORT
SIDE B
(ANP7288-B)

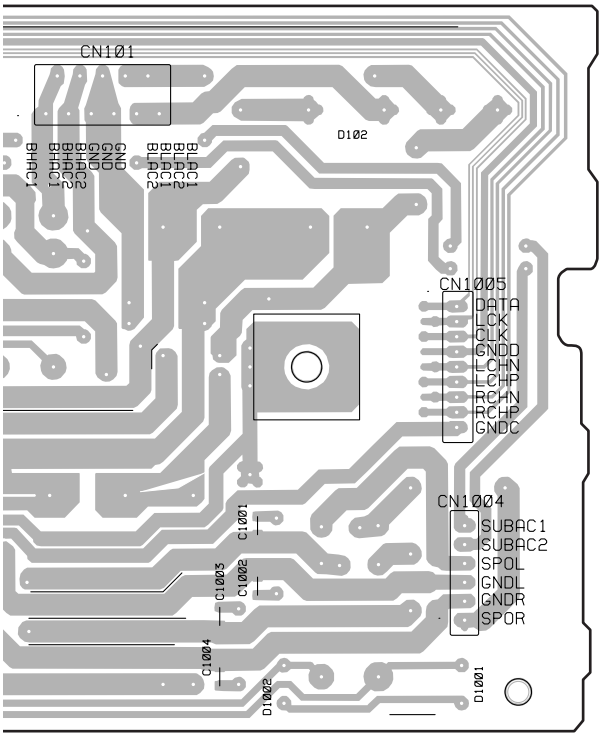

B PT SEC ASSY

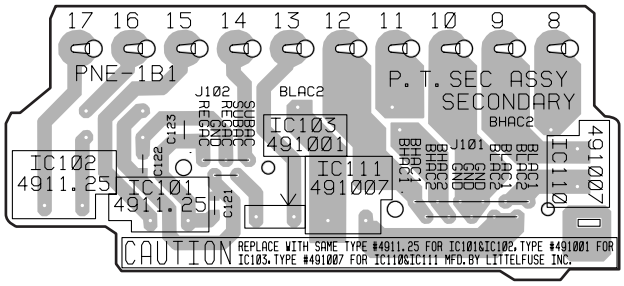

(ANP7288-B)

C PT PRI ASSY

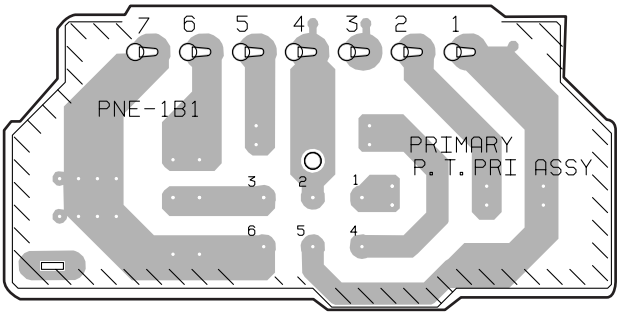

SIDE B

(ANP7288-B)

4.1.2 STANDBY PT, PW SWITCH ASSY

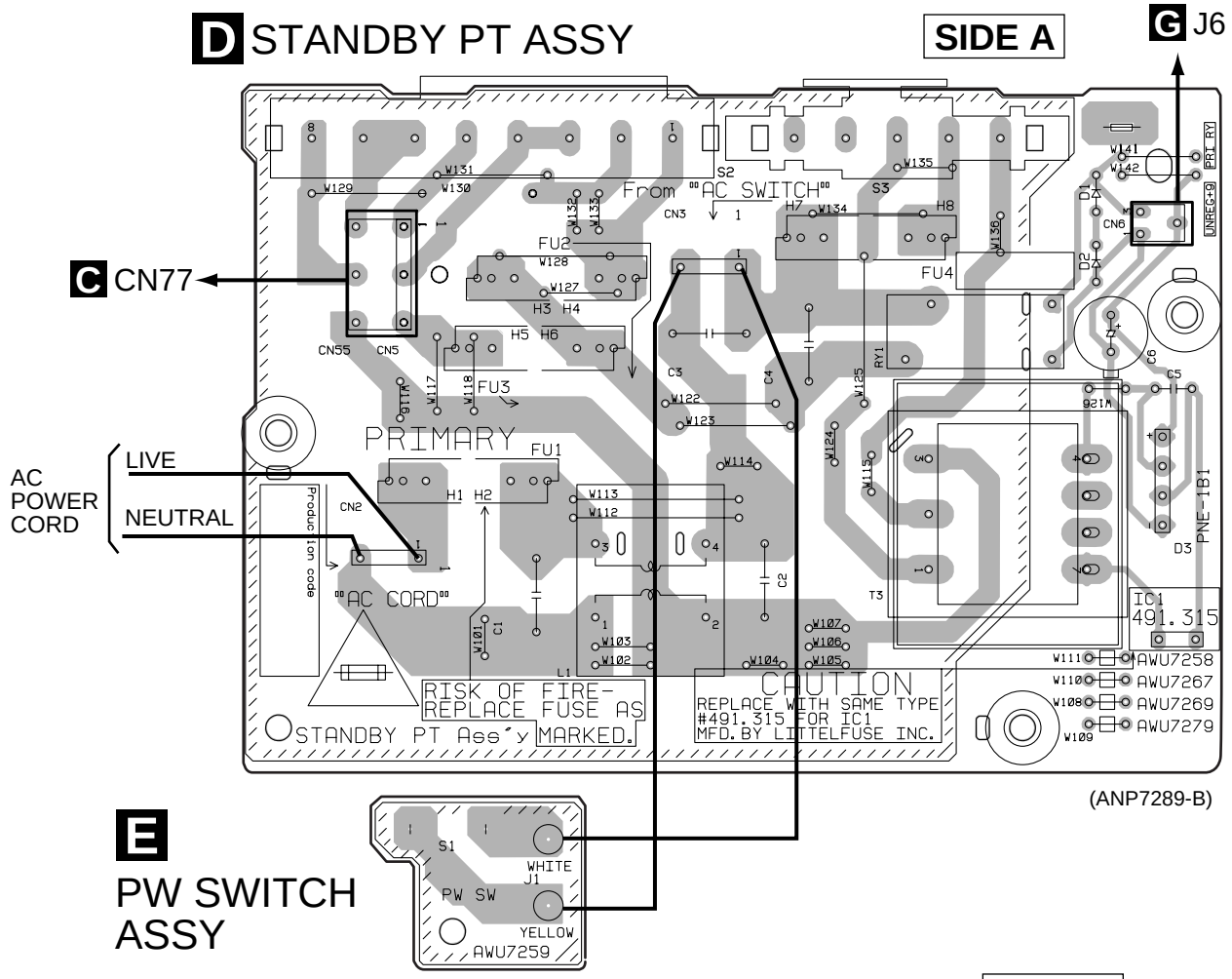

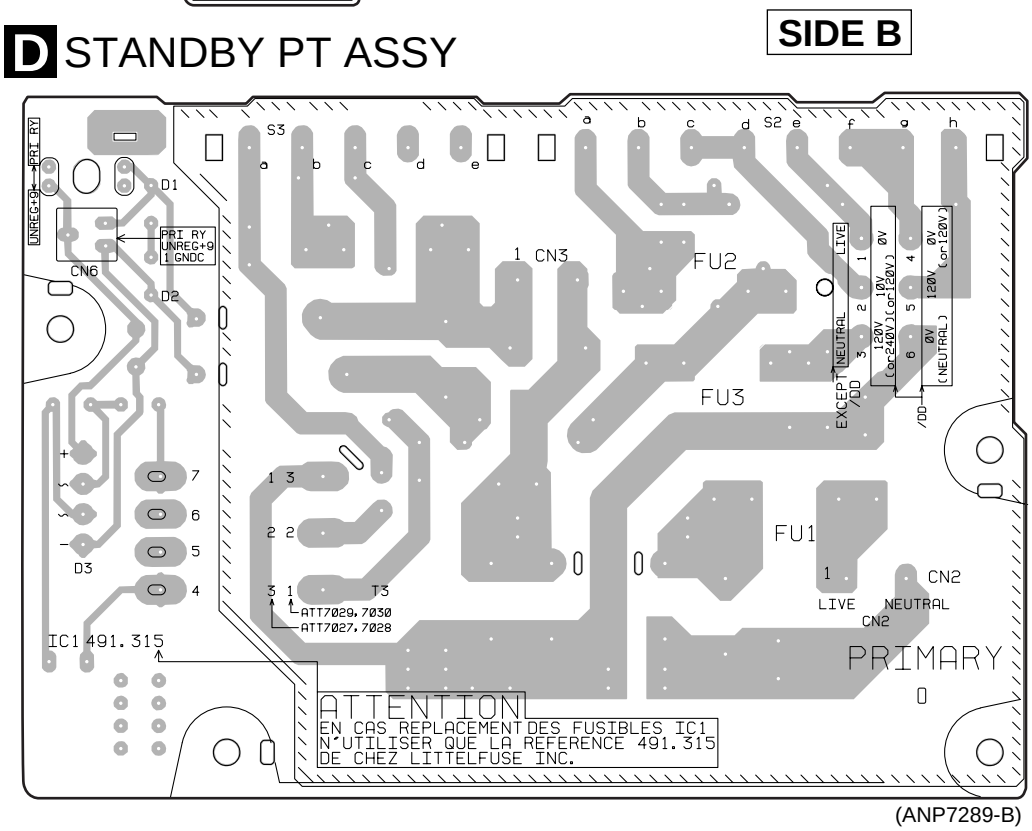

4.1.3 JACK ASSY

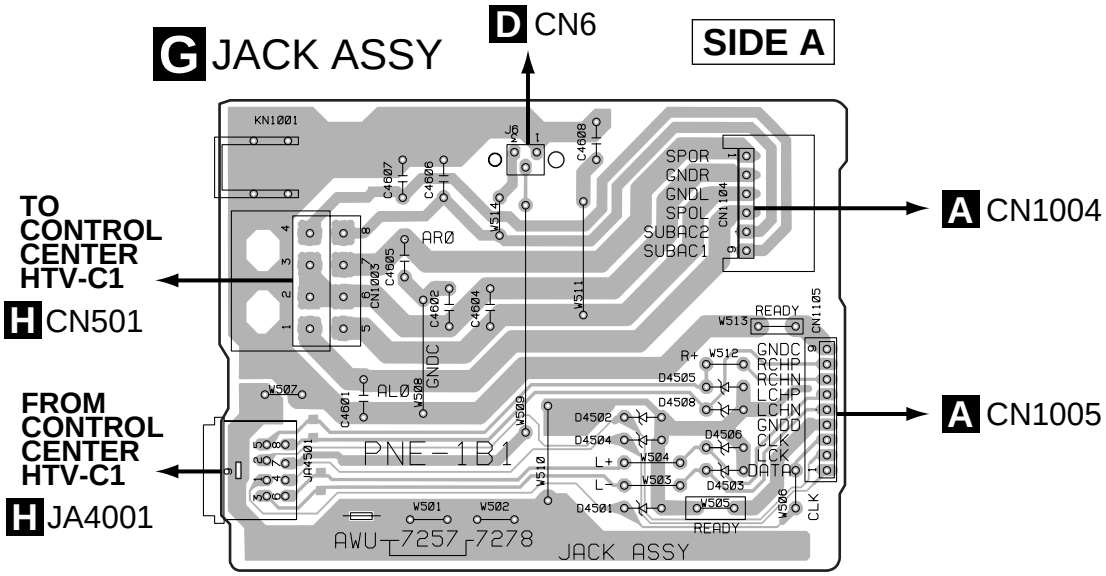

(ANP7288-B)

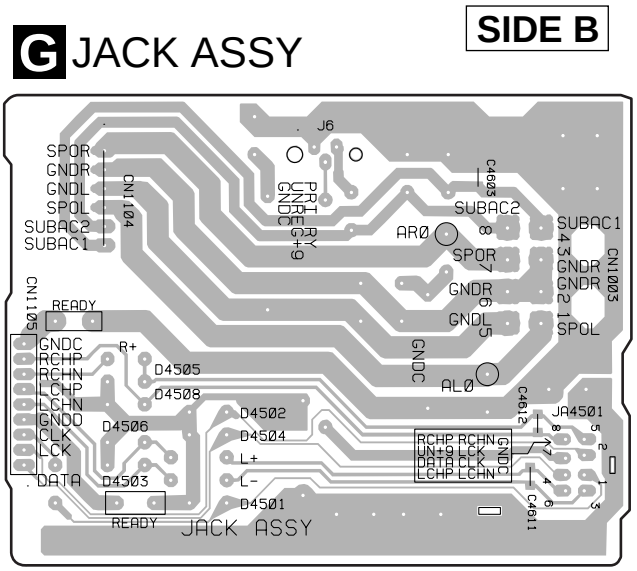

(ANP7288-B)

4.1.4 PAMP ASSY

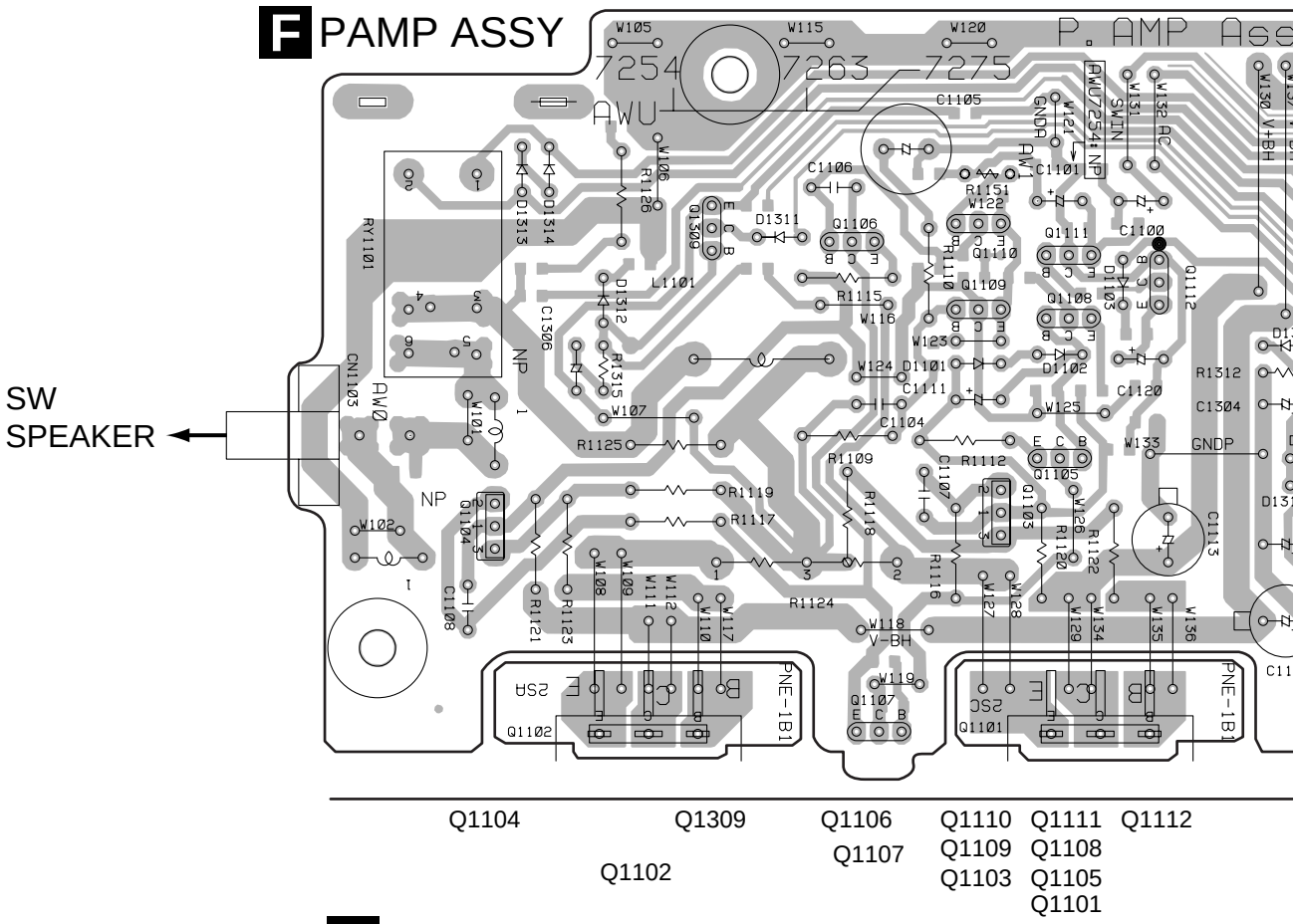

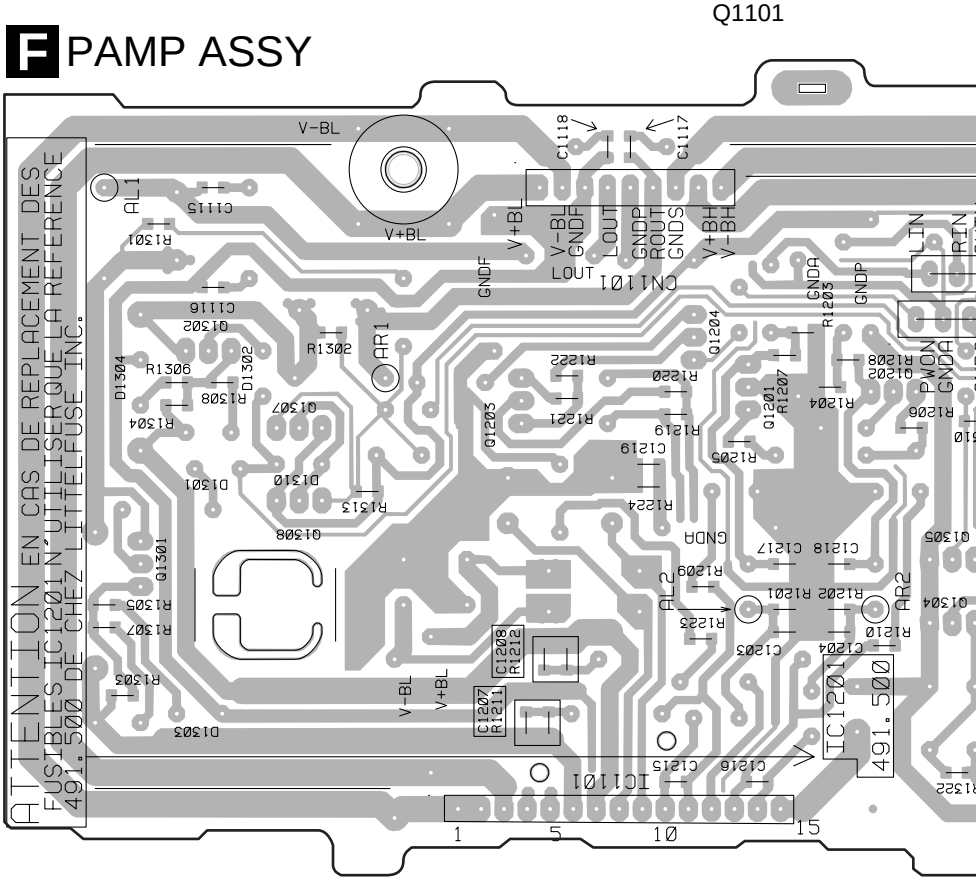

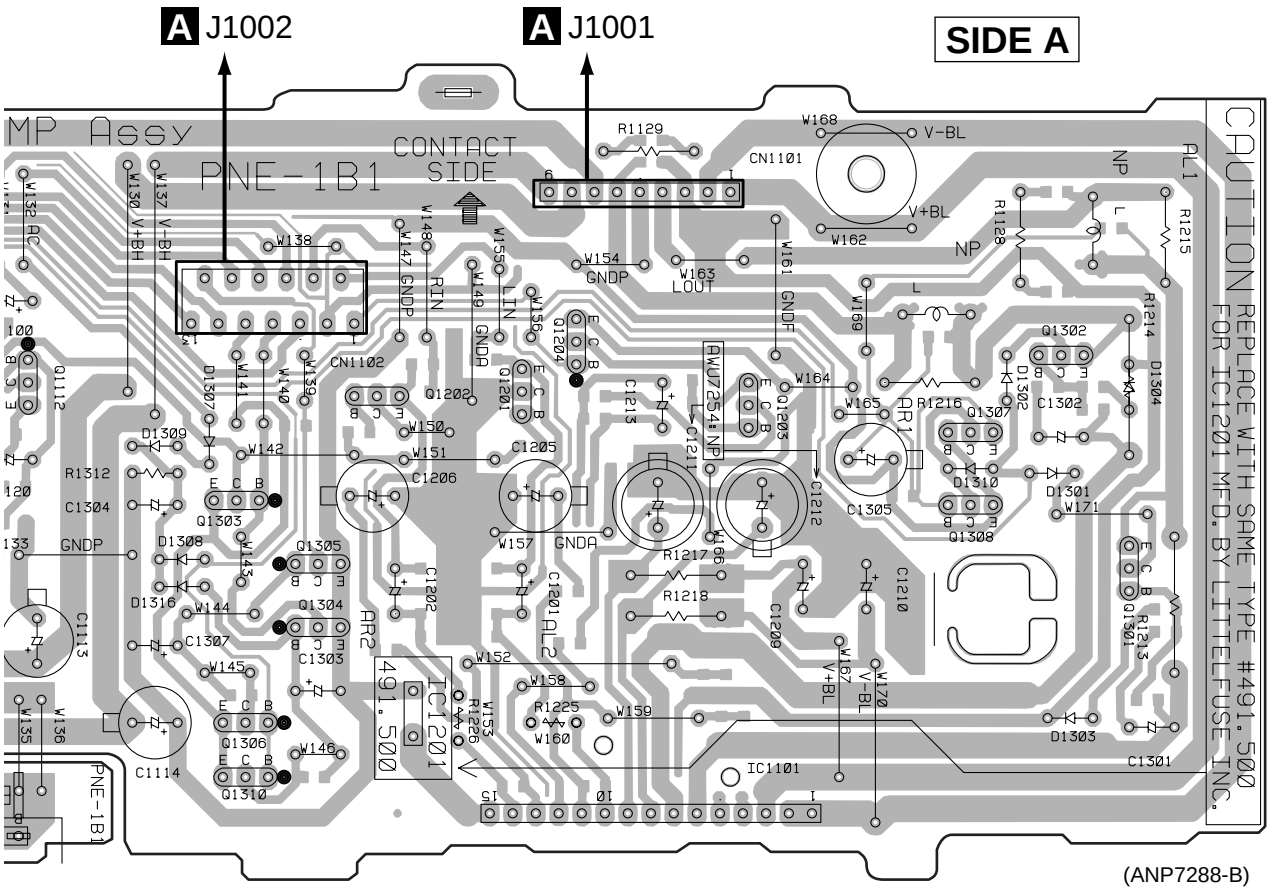

Q1112 Q1303 Q1305 Q1202 Q1201 Q1204 Q1203 Q1307 Q1302
Q1306 Q1304 Q1308
Q1310 IC1201 IC1101 Q1301

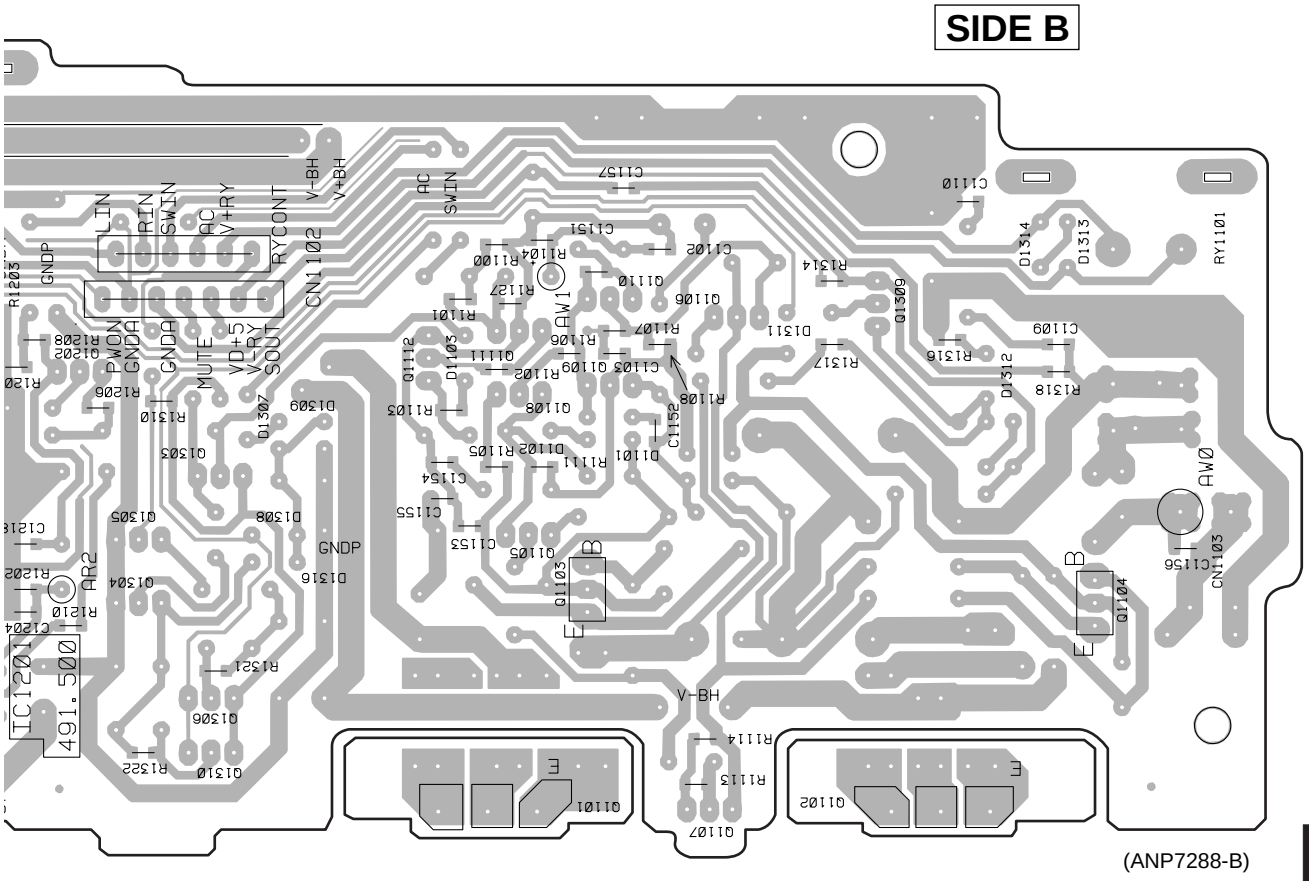

4.2 HTV-C1

4.2.1 MAIN ASSY

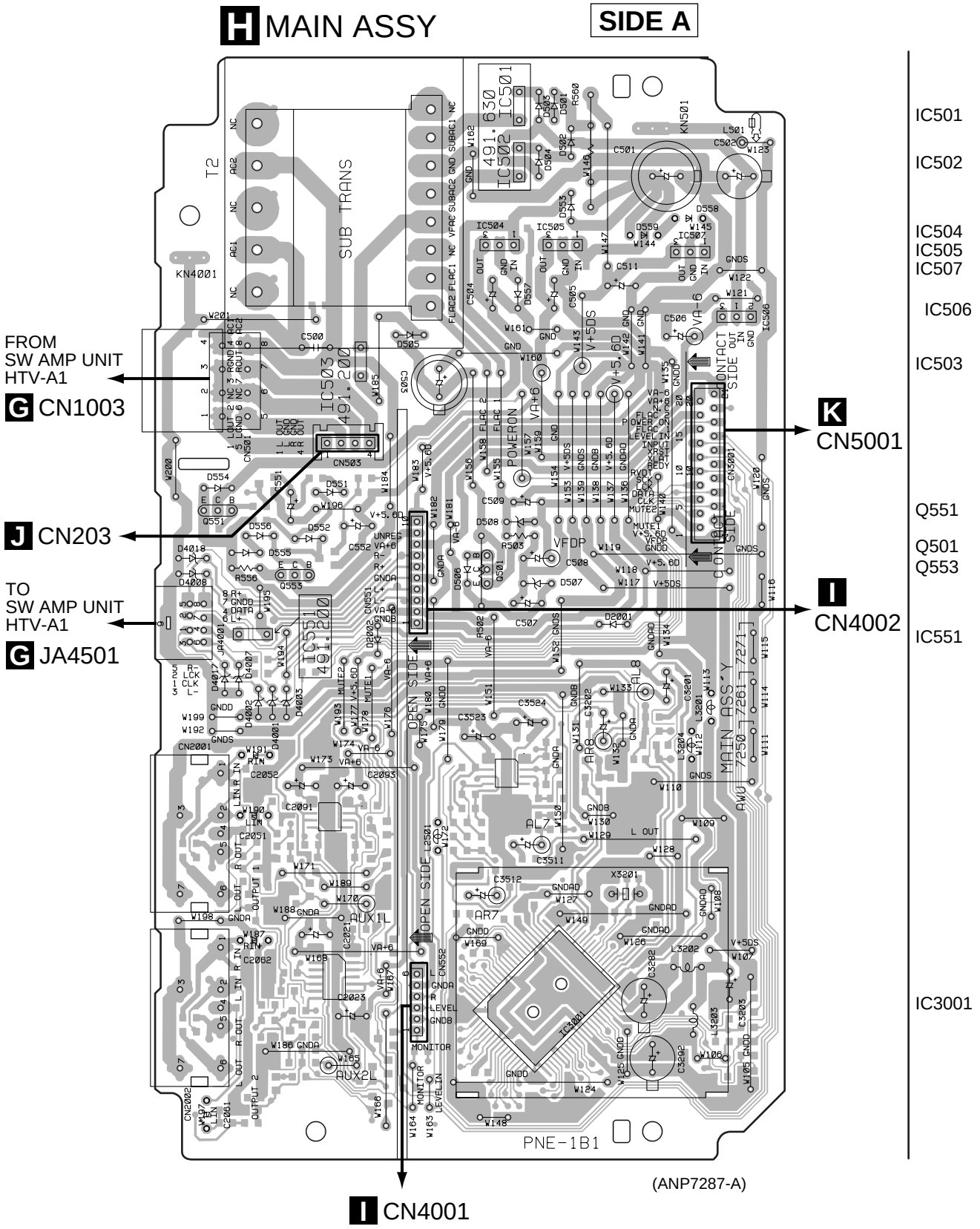

MAIN ASSY

SIDE B

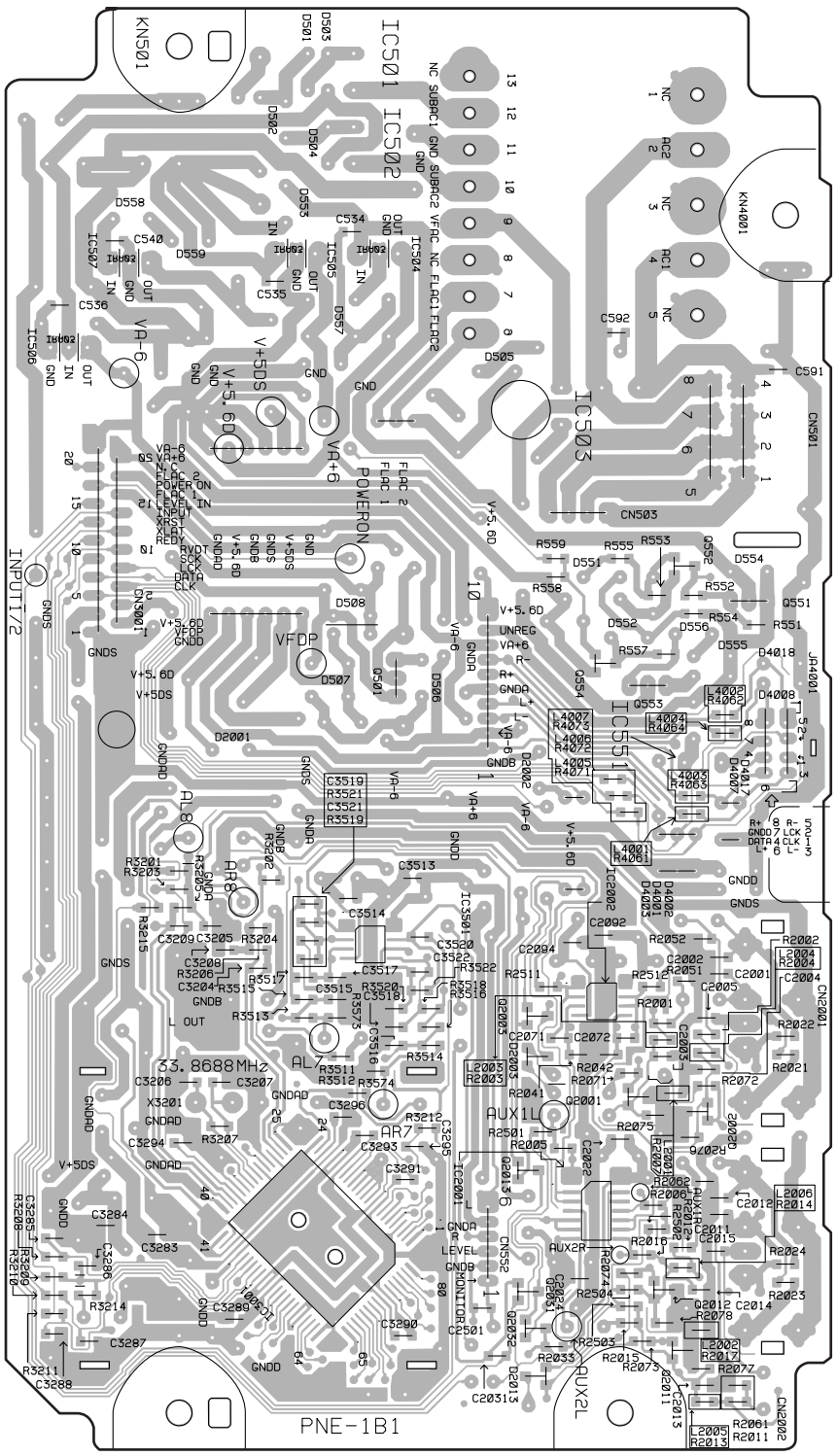

(ANP7287-A)

4.2.2 INPUT LEV., TERMINAL and DISPLAY ASSY

A

I INPUT LEV. ASSY

SIDE A

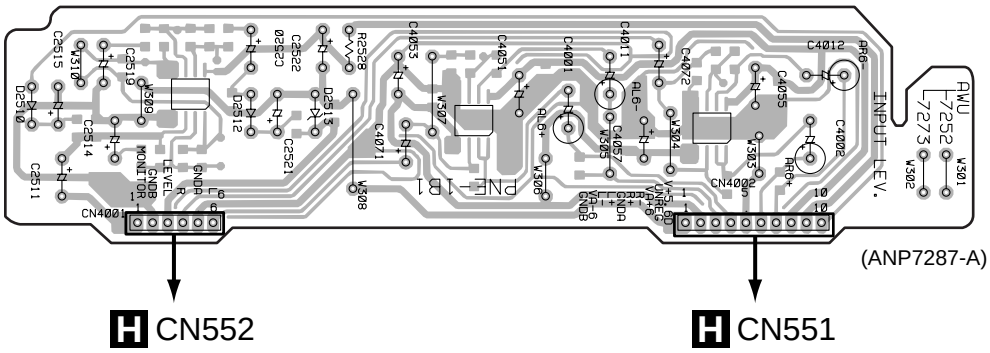

(ANP7287-A)

H CN552 **H** CN551

B

J TERMINAL ASSY

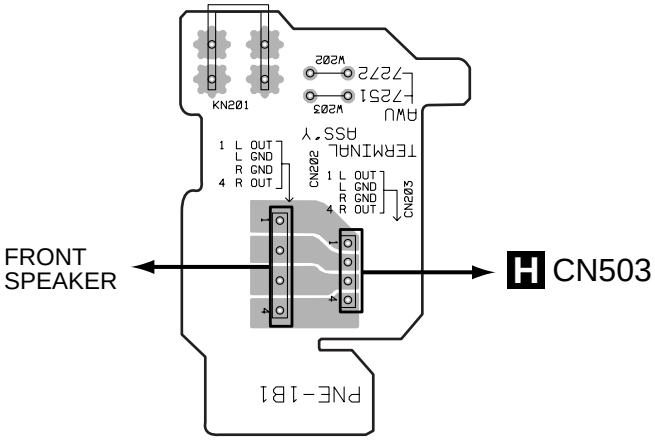

FRONT SPEAKER

H CN503

(ANP7287-A)

C

K DISPLAY ASSY

H CN3001

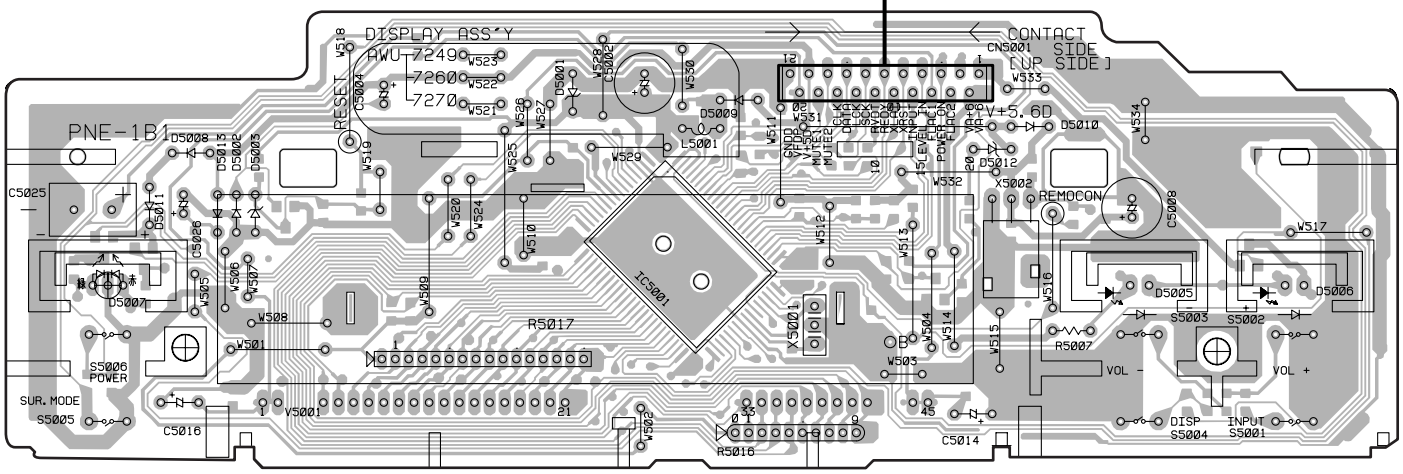

(ANP7287-A)

D

I INPUT LEV. ASSY

SIDE B

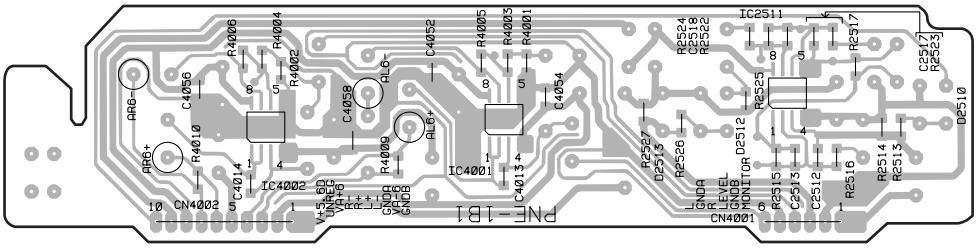

(ANP7287-A)

IC4002 IC4001 IC2511

J TERMINAL ASSY

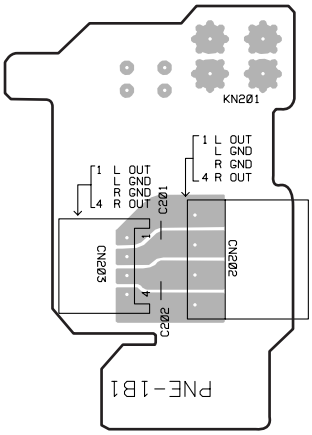

(ANP7287-A)

K DISPLAY ASSY

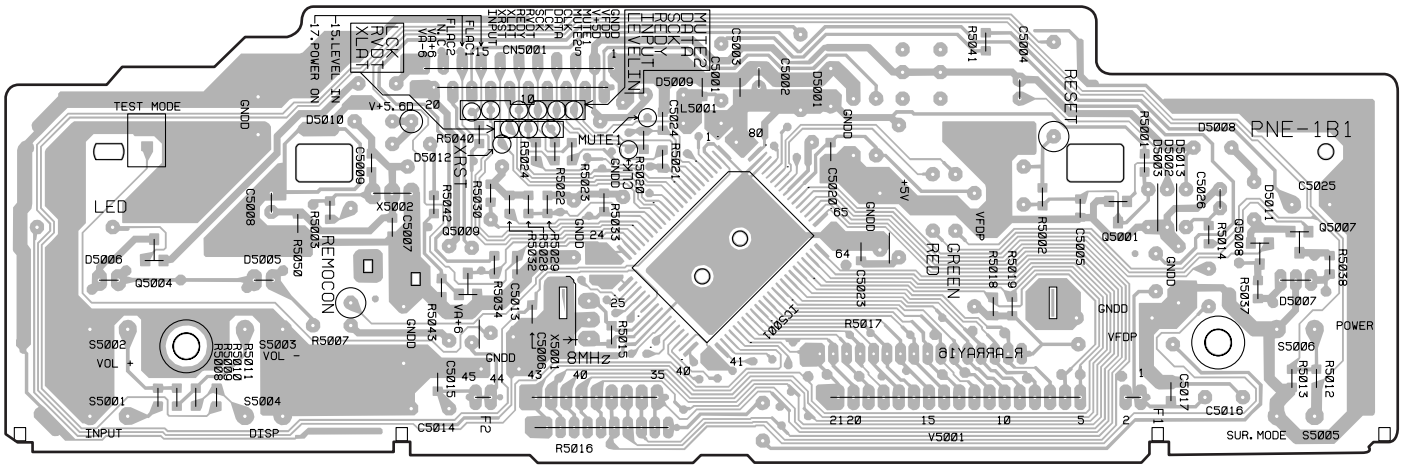

(ANP7287-A)

Q5004 Q5009 IC5001 Q5001 Q5008 Q5007

5. PCB PARTS LIST

NOTES :
- *Parts marked by " NSP " are generally unavailable because they are not in our Master Spare Parts List.*
- *The ⚠ mark found on some component parts indicates the importance of the safety factor of the part. Therefore, when replacing, be sure to use parts of identical designation.*
- *When ordering resistors, first convert resistance values into code form as shown in the following examples.*

Ex. 1 *When there are 2 effective digits (any digit apart from 0), such as 560 ohm and 47k ohm (tolerance is shown by J = 5%, and K = 10%).*

560 Ω → 56 × 10¹ → 561 ..... RD1/4PU 5 6 1 J
47k Ω → 47 × 10³ → 473 ..... RD1/4PU 4 7 3 J
0.5 Ω → R50 ..... RN2H R 5 0 K
1 Ω → 1R0 ..... RS1P 1 R 0 K

Ex. 2 *When there are 3 effective digits (such as in high precision metal film resistors).*

5.62k Ω → 562 × 10¹ → 5621 ..... RN1/4PC 5 6 2 1 F

5.1 HTV-A1

LIST OF PCB ASSEMBLIES

MOTHER ASSY	AWM7419
├─ AFPS ASSY	AWU7262
├─ PAMP ASSY	AWU7263
├─ PT PRI ASSY	AWU7264
├─ PT SEC ASSY	AWU7265
└─ JACK ASSY	AWU7257
SUB ASSY	AWX7293
├─ STANDBY PT ASSY	AWU7267
└─ PW SWITCH ASSY	AWU7259

A AFPS ASSY

SEMICONDUCTORS

Mark	No.	Description	Part No.
⚠	IC121,IC122 (250mA)		AEK7002
	IC8001		BU2092F
	IC6001		M62419FP
	IC4501-IC4503,IC6031		NJM4558MD
	IC6501,IC6701		NJM4558MD
	IC7101		NJM4558MD
⚠	IC105		NJM7812FA
⚠	IC106		NJM7912FA
	Q1002,Q1005		2SC1740S
⚠	Q6051,Q6052		2SC1740S
⚠	Q101		2SD1858X
	Q1001		DTA143ES
	Q8001		DTC124EK
⚠	D103-D106		11ES2
	D1001,D1002,D8001,D8002		1SS133
⚠	D101		D3SBA20(B)
⚠	D102		D5SBA20(B)
	D6051		MTZJ10B
	D8003		MTZJ2.7B
	D107		MTZJ5.6B
	D6001,D6002,D8004-D8006		MTZJ8.2B

RELAY

Mark	No.	Description	Part No.
	RY1002		ASR1035

CAPACITORS

Mark	No.	Description	Part No.
⚠	C101,C102 (4700µF/63V)		ACH7007
⚠	C103,C104 (3300µF/50V)		ACH7056
	C6013,C6014		CCSQCH470J50
	C7102,C7103		CEANPR47M50
	C6011,C6012,C6015-C6018		CEAT100M50
	C6031,C6032,C6051,C6053		CEAT100M50
	C6701,C6702,C7104,C7105,C8006		CEAT100M50
	C6004		CEAT101M10
	C6052		CEAT101M16
	C105		CEAT102M25
	C6054		CEAT221M10
	C6503,C6504		CEAT2R2M50
	C106		CEAT471M25
	C107-C109,C111,C8001,C8007		CEAT470M25
	C6019,C6020		CEAT4R7M50
	C8003-C8005		CKSQYB102K50
	C6029,C6030		CKSQYB104K25
	C6027,C6028		CKSQYB221K50
	C6005,C6006		CKSQYB472K50
	C6021,C6022,C6025,C6026		CKSQYB682K50
	C6023,C6024		CKSQYB683K25
	C4501-C4506,C6001,C6003,C8002		CKSQYF103Z50
	C1001-C1004,C216,C217		CKSQYF104Z50
	C6060		CKSQYF473Z50
	C205-C208		CQMA223K2E
	C6704		CQMBA104J50
	C6501,C6502,C6703		CQMBA473J50

RESISTORS

Mark	No.	Description	Part No.
	R8004		RD1/2PM222J
	R1001,R1002		RD1/4PM100J
	R101		RD1/4PU182J
	R102		RD1/4PU220J
	R8005		RD1/4PU273J
	R6051		RD1/4PU821J
	R4505-R4512		RS1/10S1001F
⚠	R110		RS3LMF151J
	Other Resistors		RS1/10S□□□J

OTHERS

Mark	No.	Description	Part No.
		CABLE HOLDER (9P)	51052-0900
		CABLE HOLDER (13P)	51063-1305
	J1002	JUMPER WIRE	D15A13-150-2651
	J1004	BOARD IN WIRE	DB020ND0
	CN1005	9P PLUG	KM200TA9
	CN1004	SOCKET 6-P	KP250NA6
	CN101	CONNECTOR (11P)	KPE11
	CN102	CONNECTOR (5P)	KPE5
	KN101	EARTH METAL FITTING	VNF1084

Mark	No.	Description	Part No.
B	**PT SEC ASSY**		
	SEMICONDUCTORS		
⚠	IC103 (1A)		AEK7009
⚠	IC101,IC102 (1.25A)		AEK7010
⚠	IC110,IC111 (7A)		AEK7021
	CAPACITORS		
	C123 (0.01µF)		ACG7021
	C121,C122		CKSQYF103Z50
	OTHERS		
		CABLE HOLDER (5P)	51063-0505
		CABLE HOLDER (11P)	51063-1105
	J102	JUMPER WIRE	D15A05-200-2651
	J101	JUMPER WIRE	D15A11-200-2651
C	**PT PRI ASSY**		
	OTHERS		
⚠	CN77	6P CONNECTOR	AKP7038
		PCB BINDER	VEF1040
D	**STANDBY PT ASSY**		
	SEMICONDUCTORS		
⚠	IC1 (315mA)		AEK7003
	D1,D2		1SS133X
⚠	D3		S1VB20/F03
	TRANSFORMER		
⚠	T3		ATT7027
	RELAY		
⚠	RY1		ASR7019
	CAPACITORS		
	C5 (0.01µF/AC250V)		ACG1005
⚠	C1,C3,C4 (1000pF/AC250V)		ACG7020
	C6		CEAT102M25
	OTHERS		
⚠	CN55	6P CONNECTOR	AKP7038
	H1– H6	FUSE CLIP	AKR7001
	CN6	CONNECTOR (3P)	KPE3
⚠	CN2,CN3	AC CORD SOCKET	RKP1751
⚠	S3	VOLTAGE SELECTOR	AKX7004
⚠	S2	VOLTAGE SELECTOR	AKX7006
		PCB BINDER	VEF1040
E	**PW SWITCH ASSY**		
	SWITCH		
⚠	S1		ASM7002
	OTHERS		
⚠	J1	CONNECTOR ASSY 2P	ADX7244
F	**PAMP ASSY**		
	SEMICONDUCTORS		
⚠	IC1201 (500mA)		AEK7005
⚠	IC1101		STK407-040B
	Q1105		2SA1145
⚠	Q1104		2SA1837
⚠	Q1102		2SA1941(P)

Mark	No.	Description	Part No.
	Q1108		2SA970
	Q1109,Q1110		2SA992
⚠	Q1107		2SC1740S
	Q1301,Q1302,Q1307,Q1308		2SC1740S
	Q1309		2SC2240
	Q1106		2SC2705
⚠	Q1103		2SC4793
⚠	Q1101		2SC5198(P)
	Q1111,Q1201,Q1202		2SD2144S
	Q1306,Q1310		DTA123JS
	Q1112,Q1303		DTA143ES
	Q1304,Q1305		DTC143ES
	D1307,D1309		11ES2
	D1101-D1103,D1301-D1304,		1SS133
	D1308,D1310-D1312,D1316		1SS133
	COILS		
	L1201,L1202	AF CHOKE COIL	ATH-133
	L1101	AF CHOKE COIL	ATH1004
	RELAY		
	RY1101		ASR1035
	CAPACITORS		
	C1107,C1108		CCCSL101K2H
	C1104		CCCSL120K2H
	C1106		CCCSL5R0C2H
	C1207,C1208		CCSQSL3R0C50
	C1217,C1218		CCSQSL471J50
	C1103		CCSQSL681J50
	C1101		CEAT100M50
	C1211,C1212		CEAT101M50
	C1105		CEANP101M50
	C1306		CEANP2R2M50
	C1100,C1205,C1206,C1209		CEAT100M50
	C1210,C1304		CEAT100M50
	C1111,C1303		CEAT101M10
	C1201,C1202		CEAT1R0M50
	C1120		CEAT220M50
	C1305		CEAT221M10
	C1307		CEAT470M25
	C1203,C1204		CKSQYB152K50
	C1102		CKSQYB223K50
	C1109,C1110,C1219		CKSQYF104Z50
	RESISTORS		
⚠	R1124 (0.33Ω,5W)		ACN7001
	R1126		RD1/2PM100J
⚠	R1217,R1218		RD1/4LMF101J
	R1109		RD1/4PM104J
	R1110		RD1/4PM112J
⚠	R1125,R1215,R1216		RD1/4PMF100J
⚠	R1116-R1119		RD1/4PMF101J
⚠	R1112		RD1/4PMF680J
	R1312		RD1/4PU222J
	R1315		RD1/4PU821J
⚠	R1115		RF1/4PS101J
⚠	R1120-R1123		RF1/4PS4R7J
	R1213,R1214		RS2LMFR22J
	Other Resistors		RS1/10S□□□J
	OTHERS		
	CN1103	2P CONNECTOR	5569-02A1
	CN1101	9P JUMPER CONNECTOR	KPD9
	CN1102	CONNECTOR (13P)	KPE13

Mark	No.	Description	Part No.
G	**JACK ASSY**		
	SEMICONDUCTORS		
	D4501-D4506,D4508		MTZJ8.2B
	CAPACITORS		
	C4603 (0.01µF/100V)		ACG7021
	C4601,C4602,C4604-C4606		CKCYF103Z50
	OTHERS		
		CABLE HOLDER (3P)	51063-0305
	CN1003	8P CONNECTOR	AKP7026
	J6	JUMPER WIRE	D15A03-200-2651
	CN1104	PLUG 6-P	KM250NA6L
	CN1105	9P SOCKET	KP200TA9L
		PCB BINDER	VEF1040
		I/O JACK	VKN1070
		SCREW PLATE	VNE1948

5.2 HTV-C1

LIST OF PCB ASSEMBLIES

COMPLEX ASSY	AWM7418
├ DISPLAY ASSY	AWU7260
├ MAIN ASSY	AWU7261
├ TERMINAL ASSY	AWU7251
└ INPUT LEV. ASSY	AWU7252

Mark	No.	Description	Part No.
H	**MAIN ASSY**		
	SEMICONDUCTORS		
⚠	IC501,IC502 (630mA)		AEK7006
⚠	IC503,IC551 (200mA)		AEK7023
⚠	IC504		BA05T
	IC2001		BU4066BCF
	IC3001		CXD2724Q
	IC2002,IC3501		NJM4558MD
⚠	IC507		NJM7805FA
⚠	IC505		NJM7806FA
⚠	IC506		NJM7906FA
⚠	Q501		2SB1238X
	Q553		2SB1238X
	Q2001,Q2002,Q2011,Q2012,Q554		2SC2412K
	Q2031		DTA124EK
	Q2003,Q2013		DTA143EK
	Q2032		DTC124EK
⚠	D501-D505		11ES2
	D553,D554		11ES2
	D2001,D2002,D506,D555-D557		1SS133
	D2003,D2013		DAP202K
	D507		MTZJ27D
	D4001-D4003,D4007,D4008		MTZJ8.2B
	D4017,D4018		MTZJ8.2B
	D508		MTZJ9.1C
	COILS		
	L4001-L4007 CHIP BEAD FILTER		DTL1019
	L2501		LAU1R0J
	L3203		LFA220J
	L3202		LFA6R8J
	L501	FERRITE BEAD	VTH1024
	L2001- L2006 CHIP BEADS		VTL1096
	TRANSFORMER		
⚠	T2		ATT7025
	CAPACITORS		
	C500 (0.01µF/AC250V)		ACG1005
	C591 (0.01µF/100V)		ACG7021
	C3204,C3209,C3285-C3288,C3295		CCSQCH101J50
	C3206,C3207		CCSQCH120J50
	C3517-C3520		CCSQSL331J50
	C2021,C2023,C504-C506,C509		CEAT100M50
	C511		CEAT100M50
	C552		CEAT101M10
	C503		CEAT101M63
	C501		CEAT222M25
	C502		CEAT331M25
	C3201-C3203,C3523,C3524		CEAT470M25
	C507,C508		CEAT470M50
	C3282,C3292		CEAT471M6R3
	C3511,C3512		CEAT4R7M50
	C2031,C3296,C3515,C3516		CKSQYB102K50
	C3205,C3208		CKSQYB331K50
	C2005,C2015,C2022,C2024		CKSQYF103Z50
	C3283,C3284,C3289-C3291		CKSQYF103Z50
	C3293,C3294,C3513,C3514		CKSQYF103Z50
	C534-C536,C540,C592		CKSQYF103Z50
	RESISTORS		
	R556		RD1/4PU220J
	R503		RD1/4PU223J
	R502		RS1LMF122J
	R560		RS3LMF101J
	Other Resistors		RS1/10S□□□J
	OTHERS		
	CN2001,CN2002	PIN JACK (4P)	AKB7015
	CN501	8P CONNECTOR	AKP7026
	X3201	CRYSTAL RESONATOR (33.8688MHz)	ASS7000
	CN3001	FFC CONNECTOR 21P	HLEM21S-1
	CN551	10P PLUG	KM200TA10
	CN552	6P PLUG	KM200TA6
	CN503	SOCKET 4-P	KP250NA4
		I/O JACK	VKN1070
	KN4001,KN501	EARTH METAL FITTING	VNF1084
I	**INPUT LEV. ASSY**		
	SEMICONDUCTORS		
	IC2511,IC4001,IC4002		NJM4558MD
	D2510,D2512		1SS133
	D2513		MTZJ4.3B
	CAPACITORS		
	C2513,C2518		CCSQCH220J50
	C4001,C4002,C4011,C4012		CEAT100M50
	C2511		CEAT1R0M50
	C2514,C2515,C2519,C2522,C4051		CEAT470M25
	C4053		CEAT470M25
	C2520,C2521,C4071,C4072		CEAT4R7M50
	C4052,C4054,C4056,C4058		CKSQYF103Z50
	RESISTORS		
	R2528		RD1/4PU101J
	R4003-R4006		RS1/10S1002F
	Other Resistors		RS1/10S□□□J

Mark	No.	Description	Part No.
OTHERS			
	CN4002	10P SOCKET	KP200TA10L
	CN4001	6P SOCKET	KP200TA6L

J TERMINAL ASSY

OTHERS			
	CN203	4-P PLUG	KM250NA4L
	KN201	SCREW PLATE	VNE1948

K DISPLAY ASSY

SEMICONDUCTORS			
	IC5001		PDG239A
	Q5009		2SC2412K
	Q5007,Q5008		DTA143EK
	Q5001,Q5004		DTC143EK
	D5002,D5008-D5011,D5013		1SS133
	D5007		GL3ED8
	D5012		MTZJ3.0B
	D5003		MTZJ6.8B
	D5005,D5006		SLP3118C51H
COIL			
	L5001		LAU220J
SWITCHES			
	S5001-S5006		ASG1034
CAPACITORS			
	C5025 (0.047F/5.5V)		ACH1246
	C5024		CCSQSL471J50
	C5004		CEJA100M25
	C5002,C5008		CEJA101M10
	C5026		CEJA220M10
	C5023		CKSQYB472K50
	C5001,C5003,C5007,C5013		CKSQYF103Z50
	C5006		CKSQYF473Z50
RESISTORS			
	R5017		RA15T473J
	R5016		RA9T473J
	R5007		RD1/4PU821J
	Other Resistors		RS1/10S□□□J
OTHERS			
	V5001	FL TUBE	AAV7052
	X5001	CERAMIC RESONATOR (8MHz)	DSS1053
		REMOTE RECEIVER UNIT	GP1U28X
		FL HOLDER	VNF1085
	CN5001	FFC CONNECTOR 21P	XKP3021

6. ADJUSTMENT

There is no information to be shown in this chapter.

7. GENERAL INFORMATION

7.1 PARTS

7.1.1 IC

■ BU2092F (IC8001: AFPS ASSY)

● Serial In/Parallel Out Driver

● The information shown in the list is basic information and may not correspond exactly to that shown in the schematic diagrams.

● Block Diagram

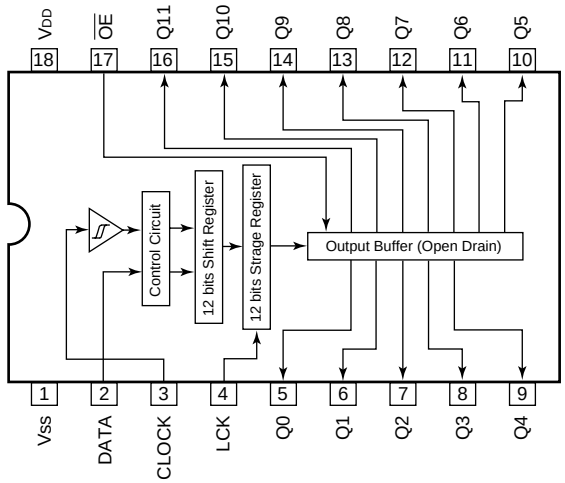

● Pin Function

No.	Name	I/O	Description
1	Vss	–	GND
2	DATA	I	Serial data input
3	CLOCK	I	Shift lock for data (⎍)
4	LCK	I	Lutch clock for data (⎍)
5 – 16	Q0 – Q11	O	Parallel data output (Nch Open Drain FET) Lutch Data: L / H Output FET: ON / OFF
17	$\overline{OE}$	I	Output enable (H: output, FET: OFF)
18	VDD	–	Power supply

■ M62419FP (IC6001: AFPS ASSY)

● Electronic Volume Control with Tone Function

● Block Diagram

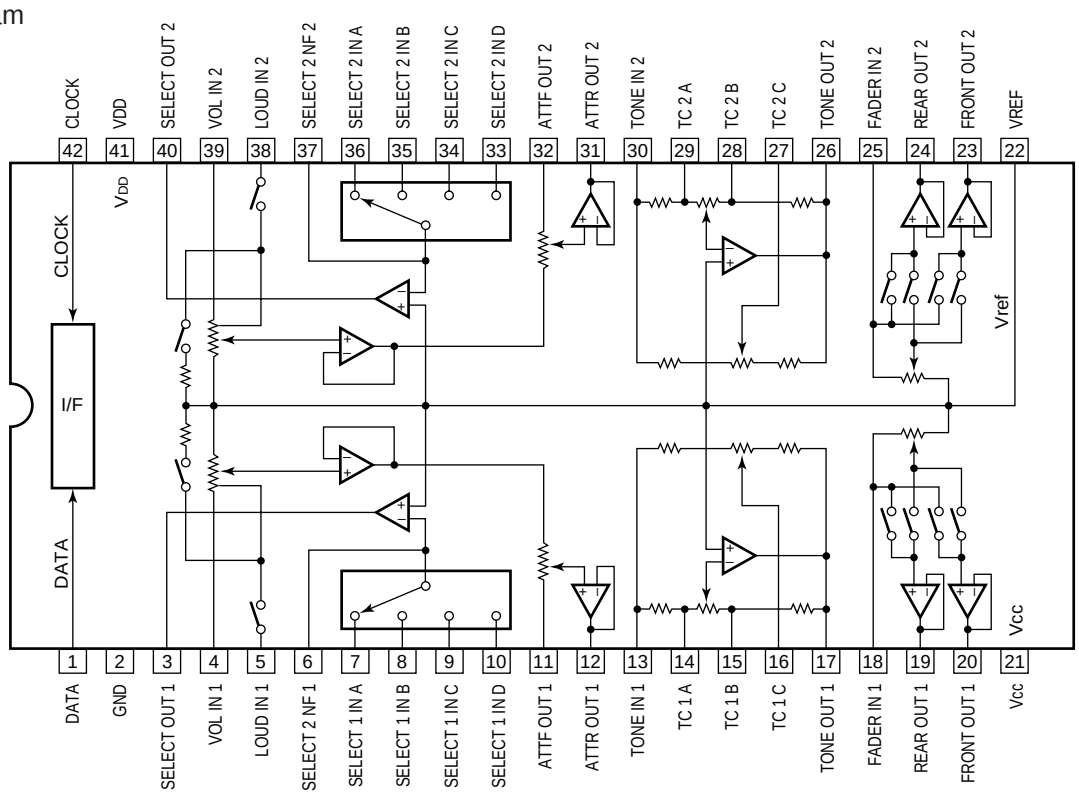

● Pin Function

No.	Name	Description
1	DATA	Control data input terminal. Data are entered synchronized to CLOCK.
2	GND	Ground terminal
3	SELECT OUT1	Output terminals of the input selector switch
4	VOL IN1	Input terminals of the volume control section
5	LOUD IN1	Frequency characteristic setting terminal of the loudness section
6	SELECT2 NF1	Each input gain is adjusted by the resistor connected between this terminal and the SELECT OUT terminal and the resistor added between IN A and IN D.
7	SELECT1 IN A	Input terminal for channel 1 of the input selector switch section
8	SELECT1 IN B	
9	SELECT1 IN C	
10	SELECT1 IN D	
11	ATTF OUT1	Output terminals of the volume control section (initial stage). Connect by C connection to the VREF terminal 22 for reduction of the switching noise.
12	ATTR OUT1	Output terminals of the volume control section (last stage)
13	TONE IN1	Input terminals of the tone control section
14	TC1 A	Frequency characteristic setting terminals of the tone control section for channel 1
15	TC1 B	
16	TC1 C	
17	TONE OUT1	Output terminals of the tone control section
18	FADER IN1	Input terminals of the fader volume control section
19	REAR OUT1	Output terminals of the fader volume control section (rear)
20	FRONT OUT1	Output terminals of the fader volume control section (front)
21	Vcc	Analog power supply terminal
22	DATA	IC signal ground. Impress 1/2 VCC.
23	FRONT OUT2	Output terminals of the fader volume control section (front)

No.	Name	Description
24	REAR OUT2	Output terminals of the fader volume control section (rear)
25	FADER IN2	Input terminals of the fader volume control section
26	TONE OUT2	Output terminals of the tone control section
27	TC2 C	Frequency characteristic setting terminals of the tone control section for channel 2
28	TC2 B	
29	TC2 A	
30	TONE IN2	Input terminals of the tone control section
31	ATTR OUT2	Output terminals of the volume control section (last stage)
32	ATTF OUT2	Output terminals of the volume control section (initial stage). Connect by C connection to the VREF terminal 22 for reduction of the switching noise.
33	SELECT2 IN D	Input terminal for channel 2 of the input selector switch section
34	SELECT2 IN C	
35	SELECT2 IN B	
36	SELECT2 IN A	
37	SELECT2 NF2	Each input gain is adjusted by the resistor connected between this terminal and the SELECT OUT terminal and the resistor added between IN A and IN D.
38	LOUD IN2	Frequency characteristic setting terminal of the loudness section
39	VOL IN2	Input terminals of the volume control section
40	SELECT OUT1	Output terminals of the input selector switch
41	VDD	Digital power supply terminal
42	CLOCK	Clock input terminal for serial data transfer

7.1.2 DISPLAY

■ AAV7052 (V5001: DISPLAY ASSY)

■ FL INDICATOR TUBE

- **Pin Assignment**

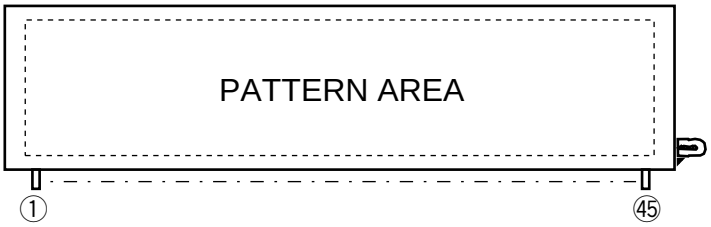

- **Pin Connection**

PIN NO.	1	2	3	4	5	6	7	8	9	10	11	12	13	14	15	16	17	18	19	20	21	22	23	24	25	26	27	28	29	30	31	32	33	34	35	36	37	38	39	40	41	42	43	44	45
CONNECTION	F1	F1	NP	NP	NP	NP	NP	NP	NP	NP	NP	NP	NP	NP	NP	NP	NP	NP	NP	NX	NX	NX	NX	NX	NX	NX	NX	NX	NX	NX	9G	8G	7G	6G	5G	4G	3G	2G	1G	NP	NP	NP	F2	F2

NOTE
1) F1,F2 ---------- Filament
2) NP ----------No pin
3) NX ---------- No extend pin
4) DL ---------- Datum Line
5) 1G - 9G ---------- Grid

- **Grid Assignment**

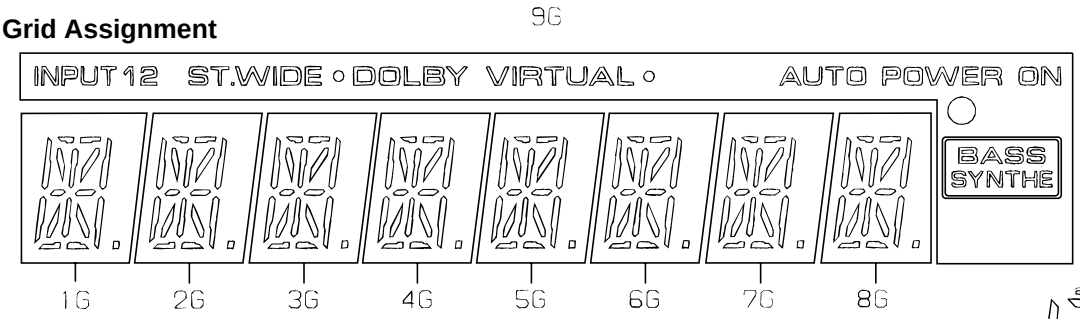

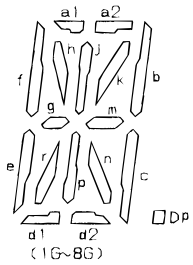

- **Anode Connection**

	1G - 8G	9G		1G - 8G	9G
P1	a1	INPUT	P10	c	BASS SYNTHE
P2	a2	1	P11	e	—
P3	h	2	P12	r	—
P4	j	ST.WIDE	P13	p	—
P5	k	○DOLBY VIRTUAL○	P14	n	—
P6	b	AUTO	P15	d1	—
P7	f	POWER	P16	d2	—
P8	m	ON	P17	Dp	—
P9	g	○			

7.2 DIAGNOSIS

7.2.1 DISASSEMBYL (HTV-A1)

■ BONNET CASE

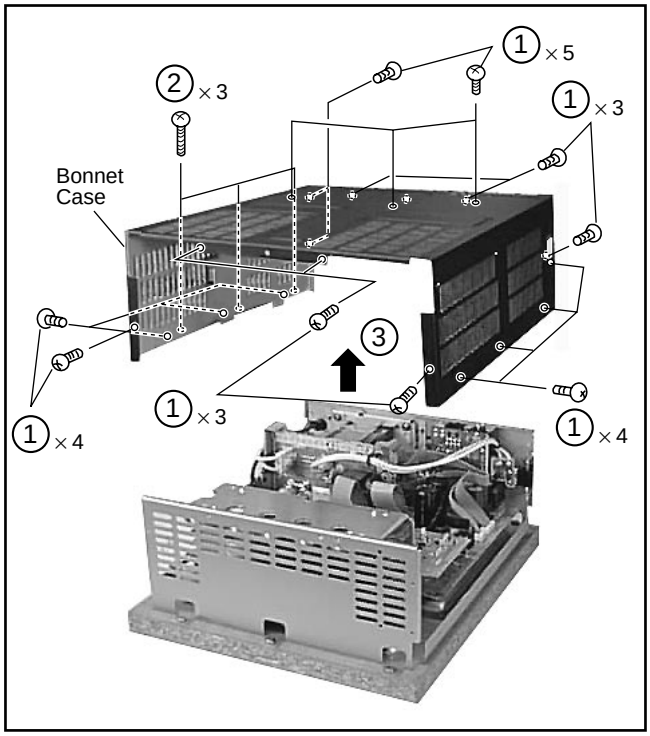

■ AFPS ASSY

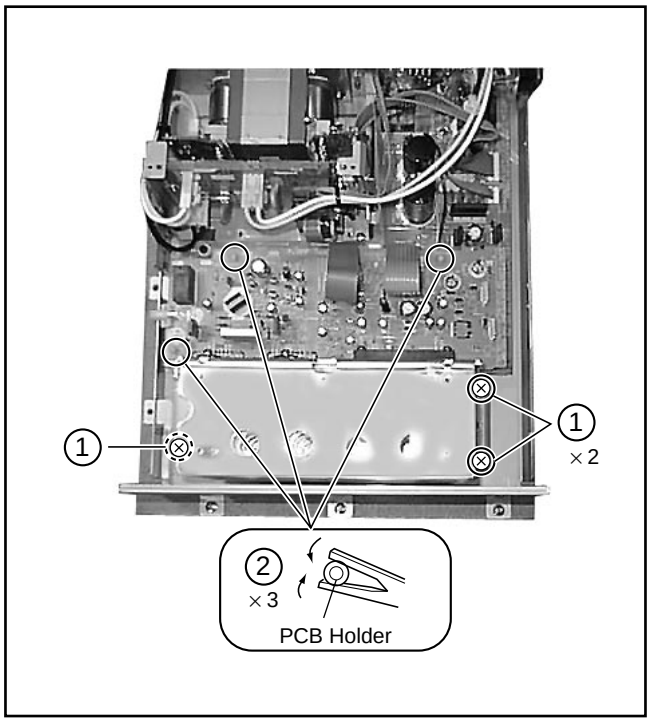

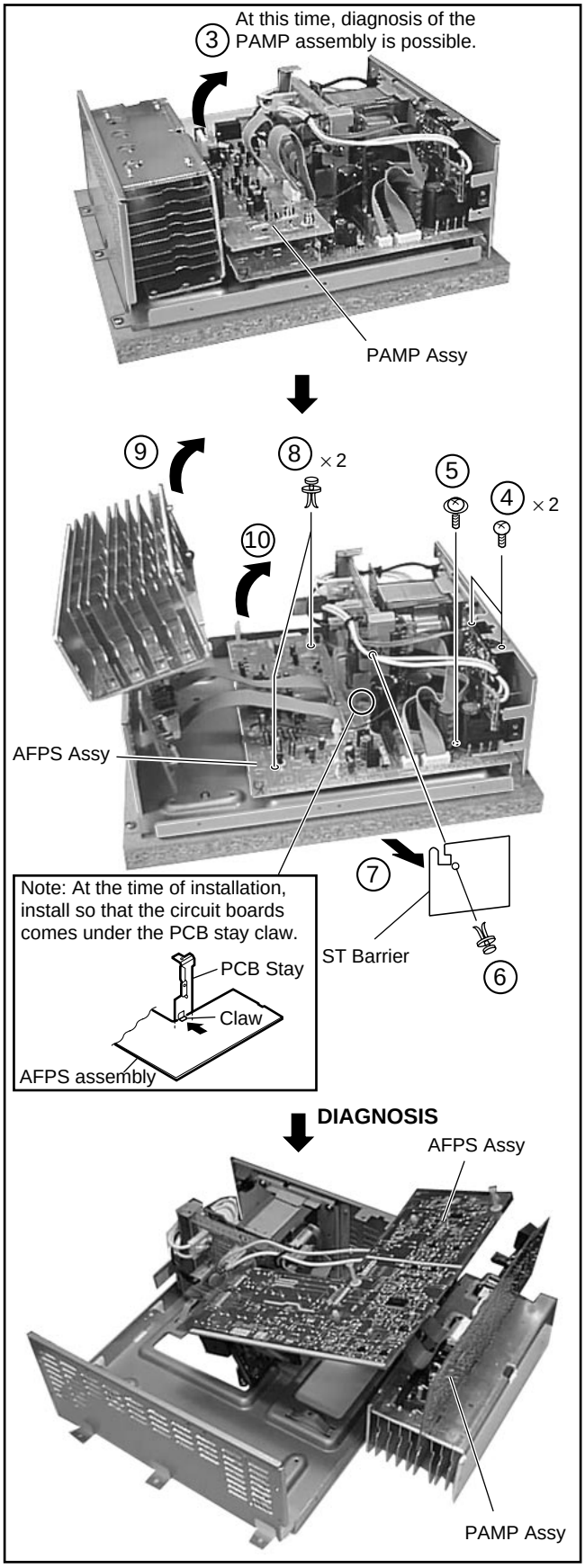

7.2.2 INDEPENDENT OPERATION DIAGNOSIS METHOD(HTV-A1)

In principle, the HTV-1 system operates only as a combination of HTV-C1 and HTV-A1, but analysis from the electronic volume control (M62419FP) on is possible according to the following method.
Note: The white numbers in black circles in the drawing correspond to the following step numbers.

❶ Short-circuit W141 (PRIRY) and W142 (UNREG+9) in the TANDBY PT assembly.
❷ Short-circuit W215 (SPRY) and W216 (GNDD) in the AFPS assembly.

[At the time of L/Rch analysis]
❸ Disconnect C6031 in the AFPS assembly and apply the signal to W251 (L ch IN). [In case of the right channel, disconnect C6023 and apply the signal to W240 (R ch IN).]
- As the gain from L ch IN to L ch SP OUT is about 37 dB (freq. = 1 kHz), input of 40 mVrms to L ch IN results in output of 1 W (2.83 Vrms/8 Ω) at L ch SP OUT.

[At the time of SWch analysis]
❹ Disconnect W131 (SW IN) in the PAMP assembly.
❺ Apply the signal to the plus pole of CI100.
- As the gain from CI100 to SWch is about 38 dB (freq. = 100 Hz), input of 36 mVrms to CI100 results in output of 1 W (2.83 Vrms/8 Ω) at SWch SP OUT.

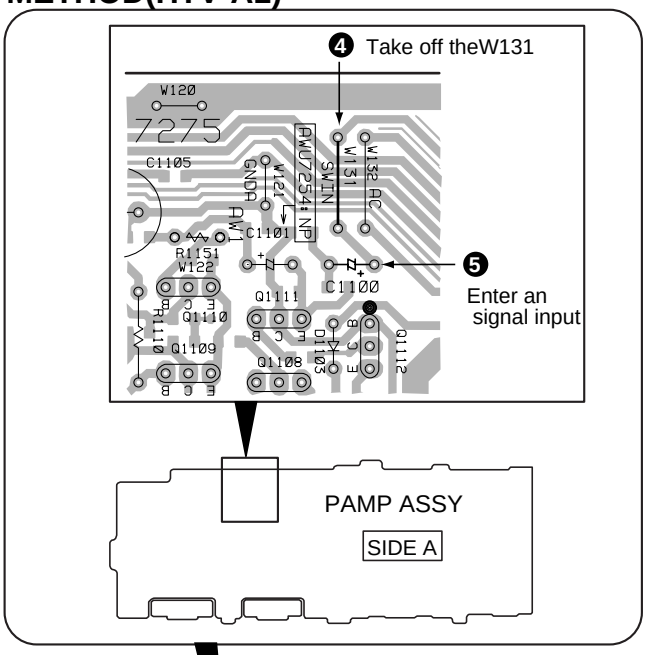

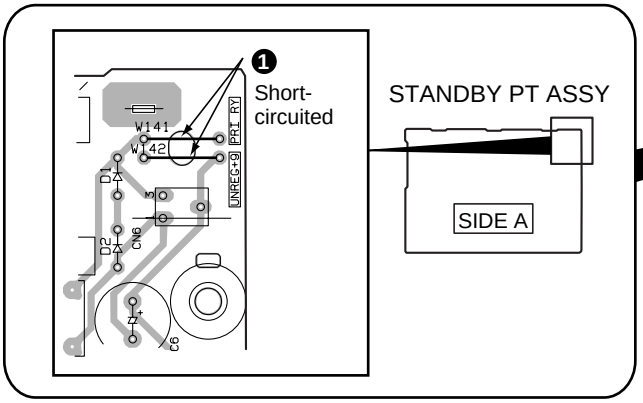

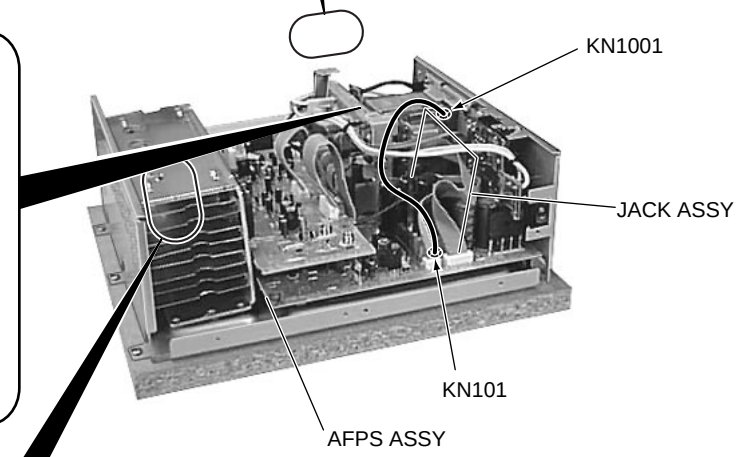

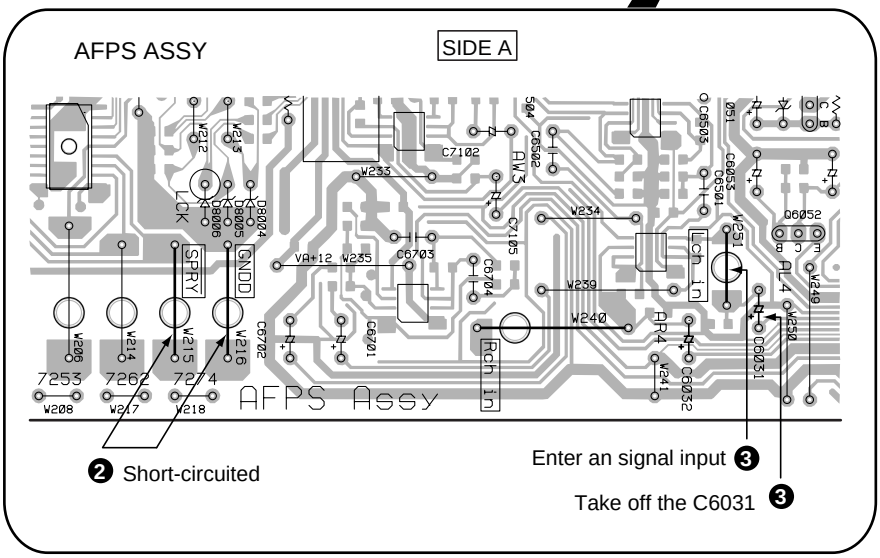

Caution items for diagnosis of the AF PS assembly after removal from the chassis

The assembly operates only when the earth fittings KN101 (AFPS assembly) and KN10 01 (JACK assembly) are connected.
For diagnosis with the AFPS assembly remo ved from the chassis, perform diagnosis with these earth fittings short-circuited.

7.3 TEST MODE (HTV-C1)

7.3.1 Entry into Test Mode

There are the following two methods for entry into test mode.
(1) Reception of the command "A55F" by remote control.
(2) Short-circuit the TEST MODE point (pin 19 of IC5001 and GND) on the copper foil side of the DISPLAY assembly. Connect the power cable to an outlet.

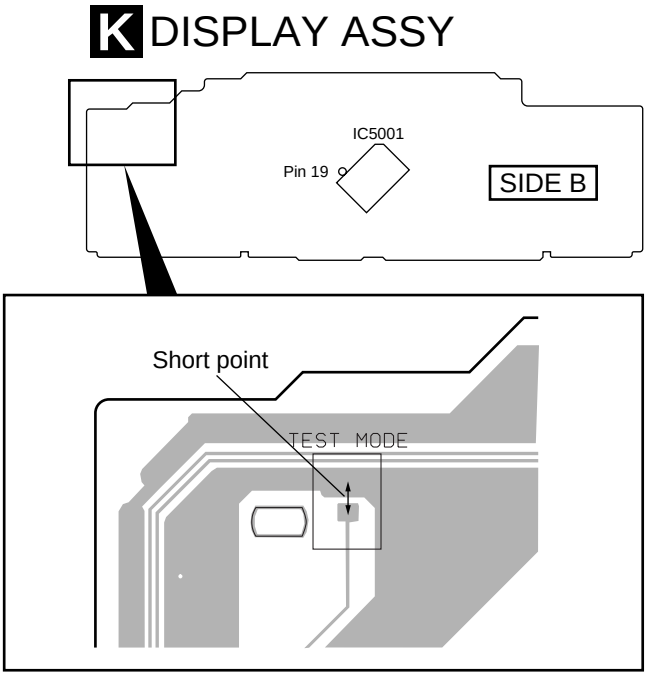

- At the time of entry into test mode, FL displays "TEST 1" for 1 second.
- The LED flashes during test mode.
- At this time, the VOLUME setting becomes 10.
- The SURROUND mode becomes DOLBY VIRTUAL ON.

7.3.2 Test Mode Operation

FL segment check

Press the DISPLAY key. → The operations (1) to (5) are switched sequentially.
(1) FL, LED all lit
(2) FL, LED all not lit
(3) (Segment check 1) Display of "ABCDEFGH"
(4) (Segment check 2) Display of "IJKLMNOP"
(5) Normal display

1. Confirmation of the Automatic Standby Function

(1) Press the INPUT key. →
The power is switched off and automatic standby mode is entered. The standby indicator lights orange. (This condition is reached when 5 minutes without a signal have passed during power ON.)
(2) Apply an input signal to the INPUT terminal. →
AUTO POWER ON (This operates only with input to the selected INPUT terminal.)

• In regard to the automatic standby mode

- Automatic standby mode always is reached during POWER ON.
- Standby condition is reached when the input signal disappears for 5 minutes (input level of INPUT 1 (2): 49 dB V, LEVEL IN voltage: 0.6 V DC). At this time, the standby indicator lights orange.
- POWER ON occurs when an input signal is entered in this condition (a signal of -46dB V to INPUT 1 (2)).
- When the power is switched off with the STANDBY/ON key on the unit or with the power key of the remote control unit, this function does not operate and the standby indicator lights red.

2. DSP Check

Press the SURR. MODE key. → DSP check mode is entered.

DSP check mode

A test tone is put out at the time of DOLBY VIRTUAL condition. Test tone output is repeated in the order of LEFT → CENTER → RIGHT → SURROUND.
Confirm that DSP operates normally at the time of SURROUND output.

Press the SURROUND MODE key twice. → DSP check mode is canceled. FL and LED display normally.

- Keys other than the specified ones operate normally.

7.3.3. Test Mode Cancellation

During power ON, set the STANDBY/OFF key to OFF or disconnect the power cable from the outlet.

7.4 INDEPENDENT OPERATION DIAGNOSIS METHOD (HTV-C1)

- In principle, the HTV-1 system operates only as a combination of HTV-C1 and HTV-SW1, but operation is possible by applying AC 26 V at the input side (bettween AC1 and AC2) of the subtransformer (T2) in the MAIN assembly.

- In this case, it is not possible to check all functions (functions on the HTV-A1 side).

- The gain from the pin jack [(INPUT 1 (2)] to AL6+ (-) or AR6+ (-) is as shown below.

SURR. MODE	Gain (dB)
OFF	-3.0dB
VD (EFFECT +3)	-3.6dB
ST - WIDE	-3.5dB

- With input of -14 dBV (200mV rms) to INPUT 1 (2), -17 dBV appears at AL6+ (-), AR6+ (-) in case of SURR. OFF.

In case of independent operation, a DC component appears at AL6+ (-), AR6+ (-) depending on the signal level.

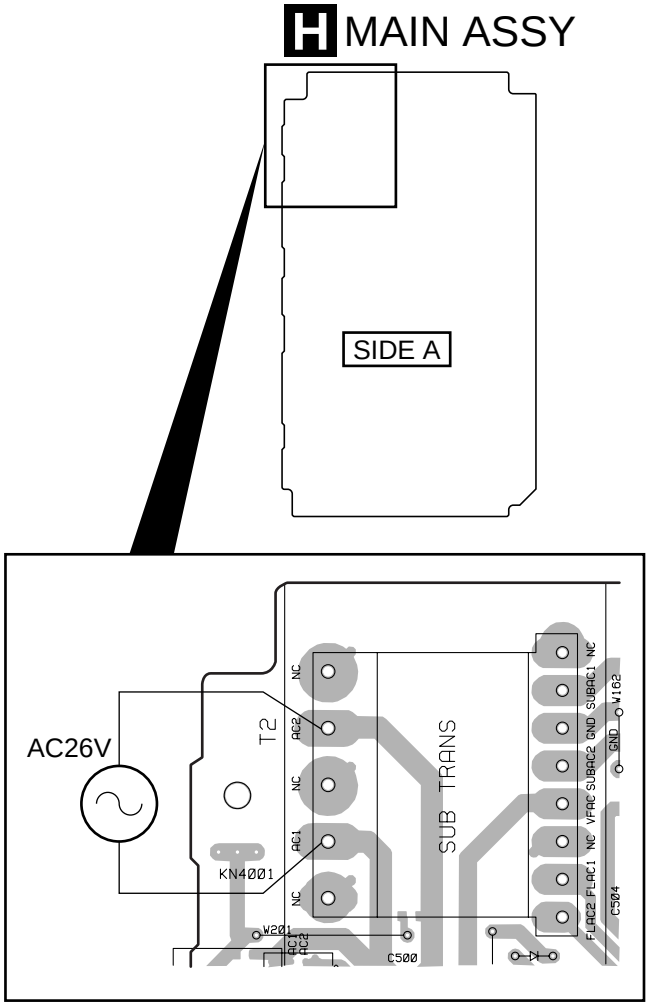

CAUTION :

- Caution and diagnosis method at the time of removal of the MAIN assembly from the chassis.

No operation occurs when the earth plates KN501 and KN4001 are not connected. When diagnosis is to be performed with the MAIN assembly removed from the chassis, short-circuit the earth plates KN501 and KN4001 before diagnosis.

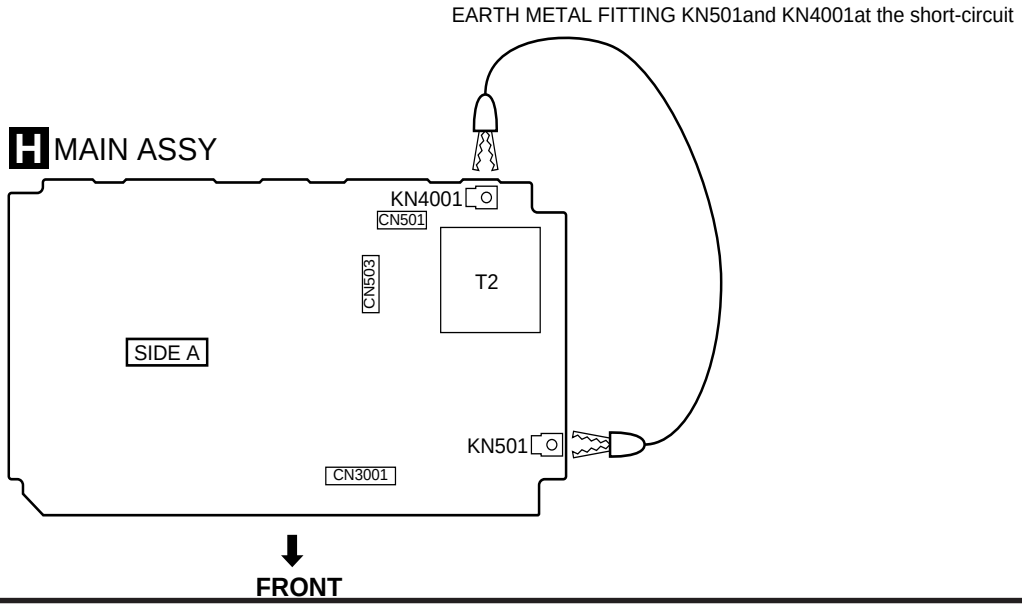

7.5 IN REGARD to the BACKUP FUNCTION (HTV-C1)

Even when disconnected from the main power supply, HTV-C1 keeps the following memory settings stored for about two weeks to one month because of the backup power supply.
When these settings are changed at the time of servicing, they will remain changed, so that caution is required. In this case, return to the factory settings is possible by switching the power supply off after entry into test mode.

■ Function for memorizing of settings

* Input switching
* Bass
* Treble
* Balance
* SW level
* Sound mode
* Effect level
* Loudness ON/OFF
* Demonstration mode ON/OFF
* Volume (only in case of demonstration mode OFF)

■ Settings at the time of shipping from the factory

* Input switching: INPUT1
* Bass: ±2
* Treble: ±0
* Balance: CENTER
* SW level: +1
* Surround mode: VIRTUAL DOLBY
* Effect level: +3
* Loudness: OFF
* Demonstration mode: ON
* Volume: MIN

7.3 BLOCK DIAGRAM

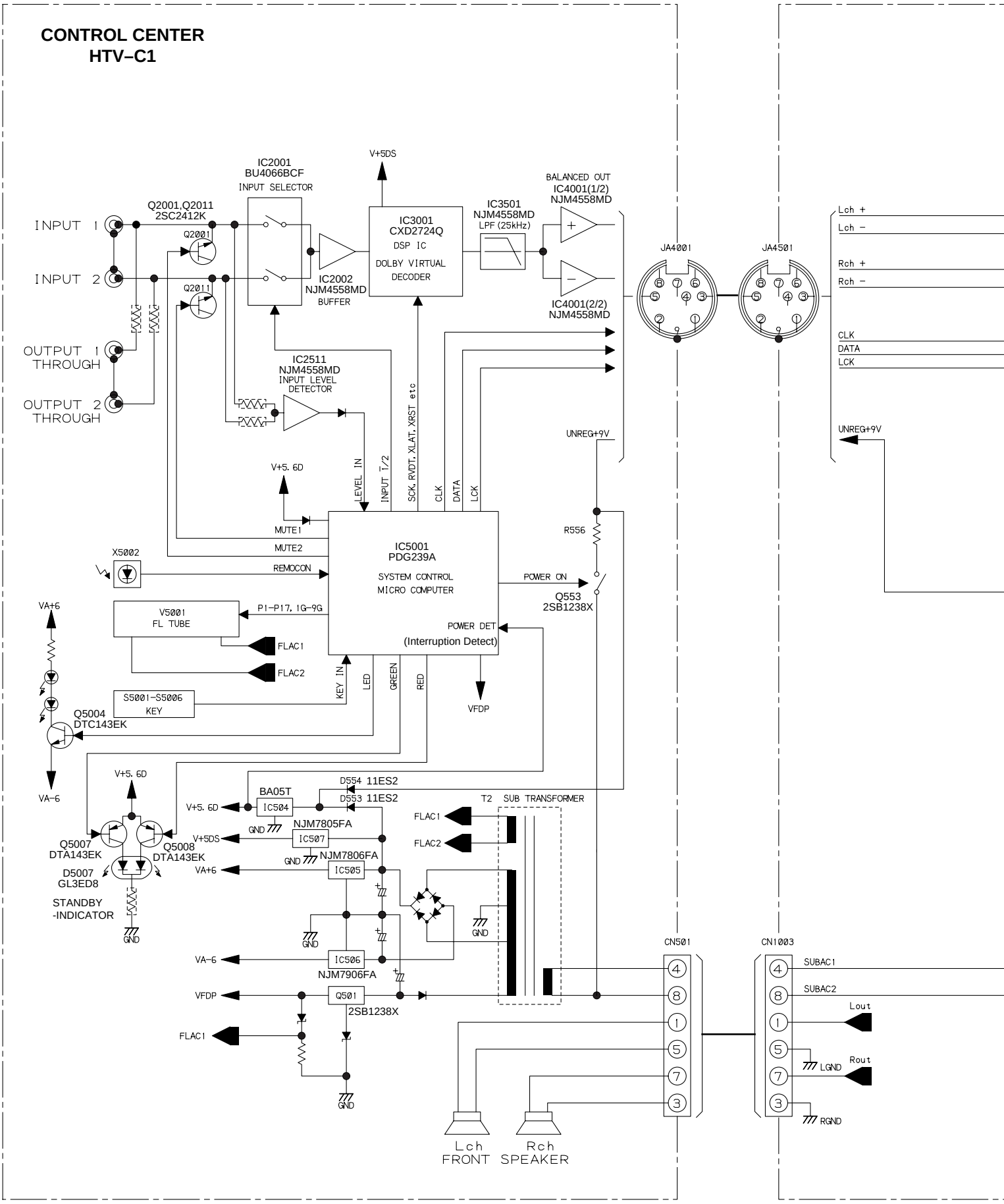

AMPLIFIER
HTV–A1

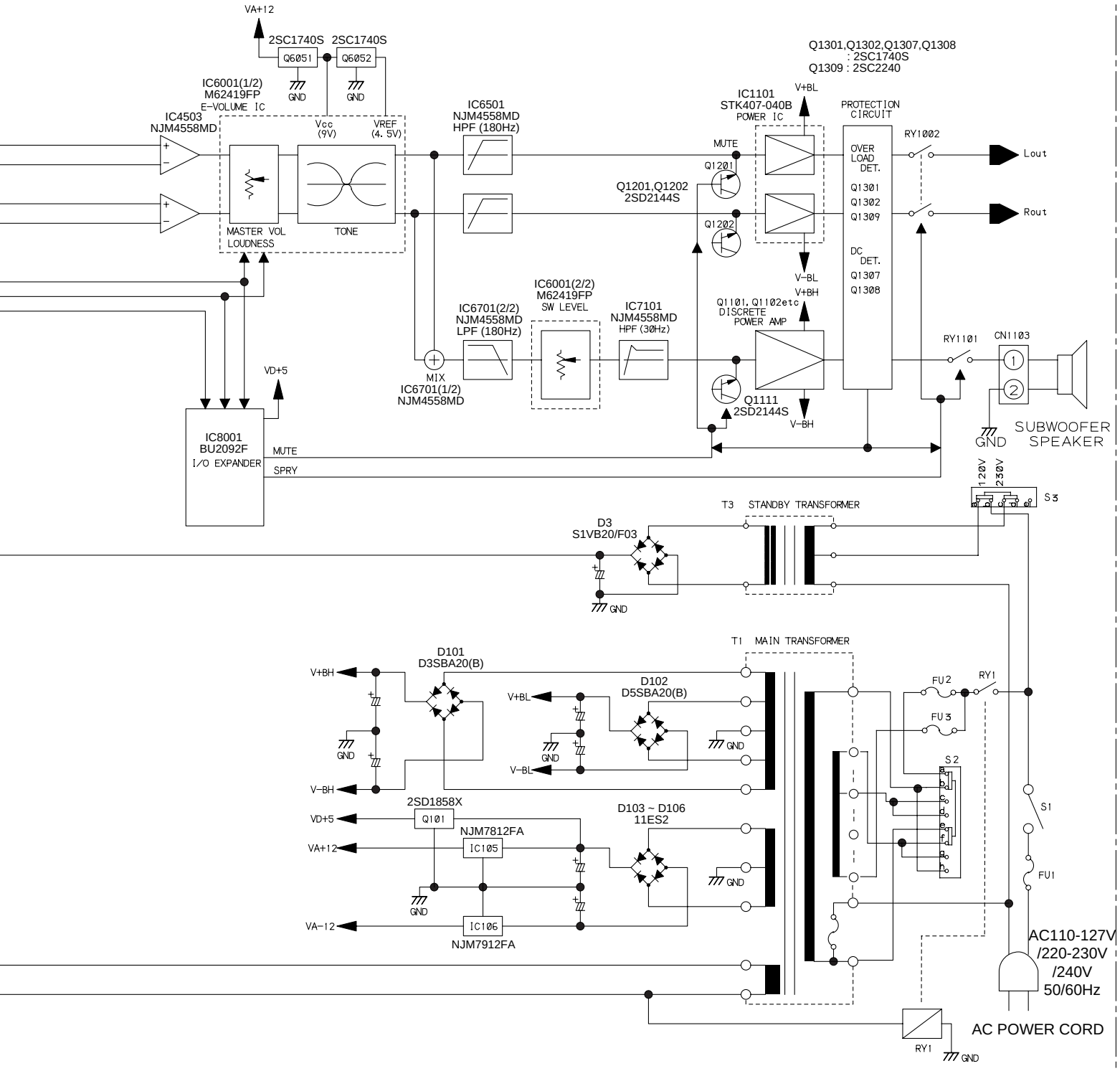

8. PANEL FACILITIES AND SPECIFICATIONS

■ CONTROL CENTER (HTV-C1)

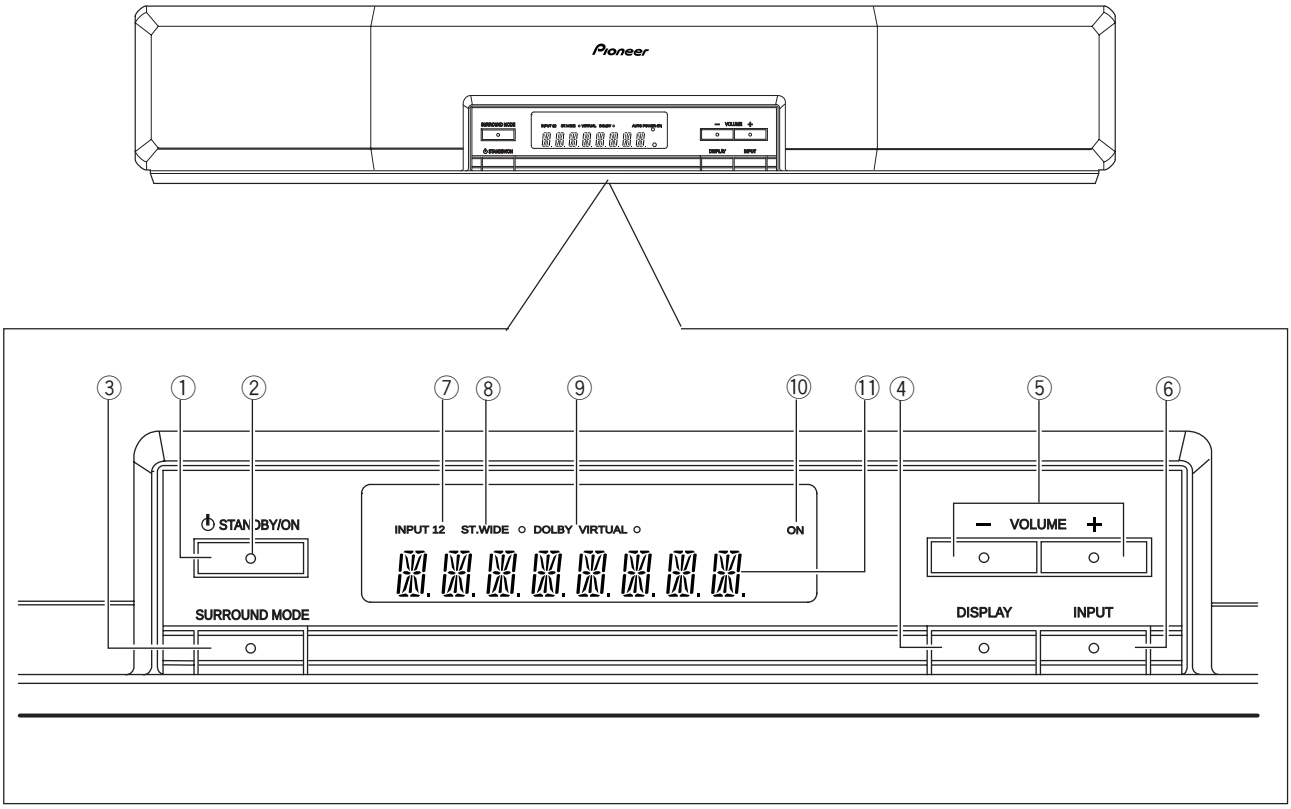

① ⏻ STANDBY/ON switch

Turns the power ON/OFF (Standby).

② STANDBY indicator

Auto Standby function

This unit features a function that automatically switches power ON or OFF (Standby) depending on whether a signal is input or not.

- When power is switched ON, if there is no input signal for 5 minutes, the unit automatically switches to Standby and the standby indicator lights orange.
- If a signal is input through the selected input jack when the indicator is lit orange (showing that the Auto Standby function is operating), power automatically switches ON.
- If you switch power OFF with the Standby switch in the main unit or the remote control (the Standby indicator lights red), the unit remains in the Standby mode even if a signal is input through the selected input jack.
- When power to the unit is ON, the indicator lights green.

③ SURROUND MODE button

Selects Surround Mode.

④ DISPLAY button

When pressed once, displays each setting in sequence for 2 seconds. When pressed again, switches to Dimmer Mode, changing the brightness of the display.

⑤ VOLUME+, – buttons

⑥ INPUT button

Selects the input device.

⑦ INPUT 1, 2 indicator

When the INPUT 1 terminal is selected, “1” is illuminated; when the INPUT 2 terminal is selected, “2” is illuminated.

⑧ ST.WIDE indicator

Lights up when Surround Mode is switched to “STEREO WIDE.”

⑨ DOLBY VIRTUAL indicator

Lights up when Surround Mode is switched to “DOLBY VIRTUAL.”

⑩ Power ON indicator

This lights when the Control Center standby switch is set to On. The indicator remains lit even if you switch the display OFF.

⑪ Character display

■ Remote Control Unit

Except Australian model

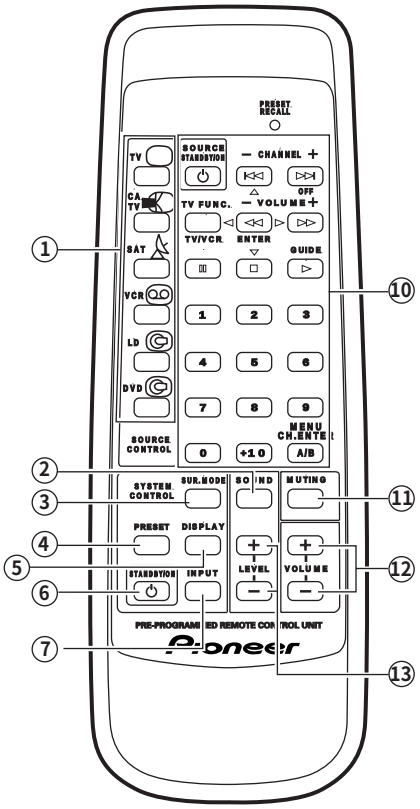

Australian model

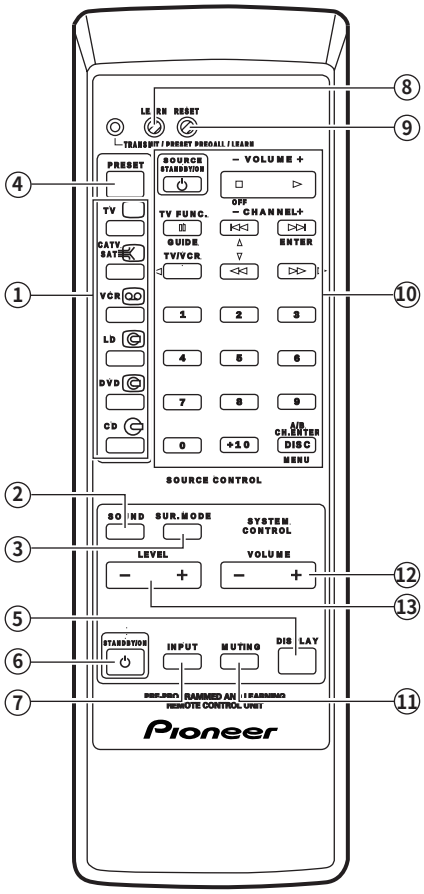

① SOURCE CONTROL buttons
Select the device to be operated.

② SOUND button
Selects the sound control function (BASS/TREBLE/BALANCE/S.W. LEVEL/EFFECT/LOUDNESS).

③ SUR.(surround) MODE button
Selects Surround Mode.

④ PRESET button
To preset other manufacturer's devices, press any one of the SOURCE CONTROL buttons together with this button.

⑤ DISPLAY button
When pressed once, displays each setting in sequence for 2 seconds. When pressed again, switches to Dimmer Mode, changing the brightness of the display.

⑥ ⏻ STANDBY/ON button
Turns the Home Theater System power ON/OFF (Standby).

⑦ INPUT button
Selects the input device.

⑧ LEARN button (Australian model only)
Selects Learn Mode.

⑨ RESET button (Australian model only)

⑩ Other device operation buttons
Select the device to be operated with the SOURCE CONTROL buttons and then operate the device.

⑪ MUTING button
Press to mute the volume.

⑫ VOLUME +, – button(s)
Use to adjust the volume.

⑬ LEVEL +, – button(s)
Use to adjust the sound control mode selected with the SOUND button.

■ SPECIFICATIONS

HTV-1

Amplifier Section

Continuous power output (DIN)
- Front L/R ..... 30 W + 30 W (1 kHz, THD 1%, 8Ω)
- Subwoofer ..... 60 W (100 Hz, THD 1%, 8Ω)

Continuous power output (RMS)
- Front L/R ..... 40 W + 40 W (1 kHz, THD 10%, 8Ω)
- Subwoofer ..... 80 W (100 Hz, THD 10%, 8Ω)

Input (Sensitivity/Impedance)
INPUT 1, 2 ..... 220 mV/70 kΩ

Speaker Section

Front L/R ..... 8.7 cm cone type
Subwoofer ..... 20 cm cone type

Miscellaneous

[Except Australian model]
Power Requirements ..... AC 110-127/220-230/240 V (switchable), 50/60 Hz
Power Consumption ..... 400 W
In Standby Condition ..... less than 3 W

[Australian model]
Power Requirements ..... AC 240 V, 50/60 Hz
Power Consumption ..... 350 W
In Standby Condition ..... less than 3 W
Dimensions
- Control center ..... 610 (W) × 110 (H) × 166 (D) mm
- Powered subwoofer ..... 364 (W) × 360 (H) × 371 (D) mm

Weight (without package)
- Control center ..... 3.8 kg
- Powered subwoofer ..... 13.5 kg

Furnished Parts

System cable A 1
System cable B 1
Audio cord 1
Mount kit 1
Dry Cell Batteries
- Except Australian model ..... size "AA" IEC R6P x 2
- Australian model ..... size "AAA" IEC LR03 x 2

Remote Control Unit 1
Operating Instructions 1
Warranty card (Australian model only) 1

NOTE:
Specifications and the design are subject to possible modifications without notice, due to improvements.

Manufactured under license from Dolby Laboratories.
DOLBY and the double-D symbol DD are trademarks of Dolby Laboratories.
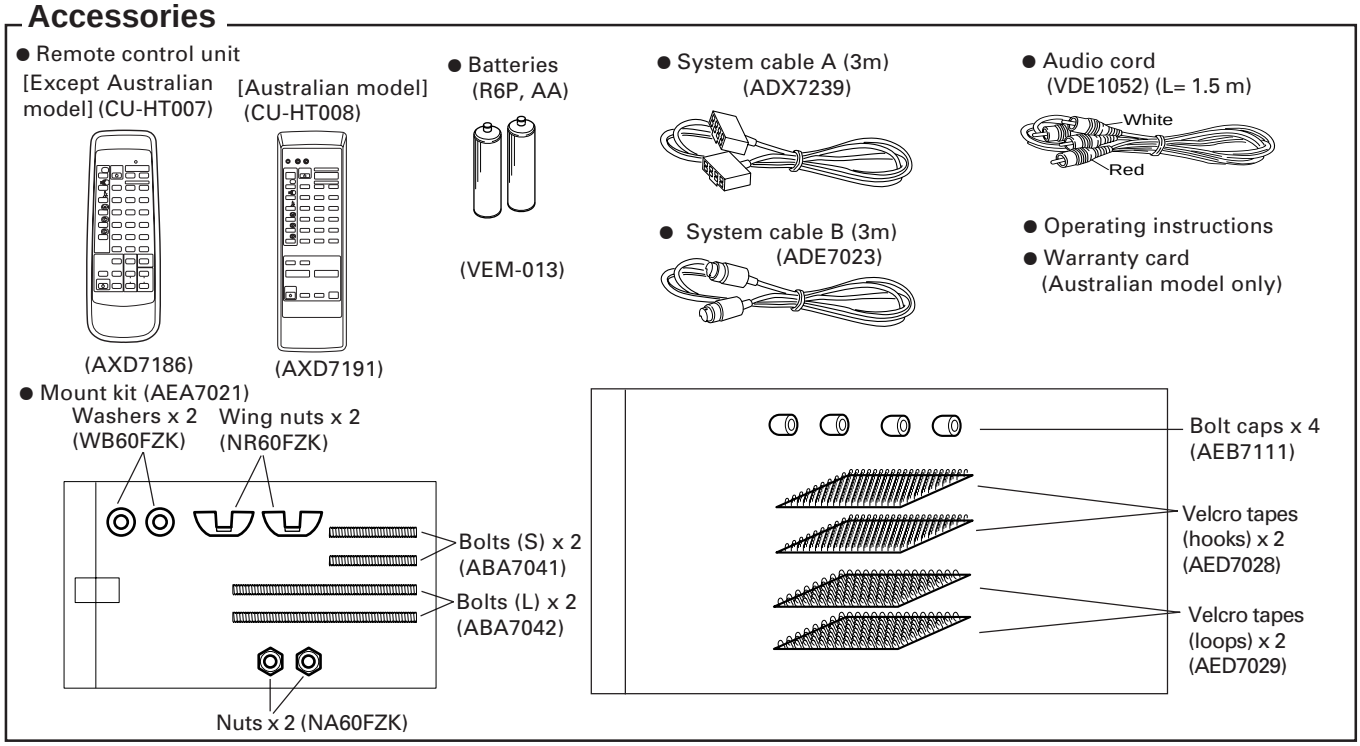
Accessories