User's Manual

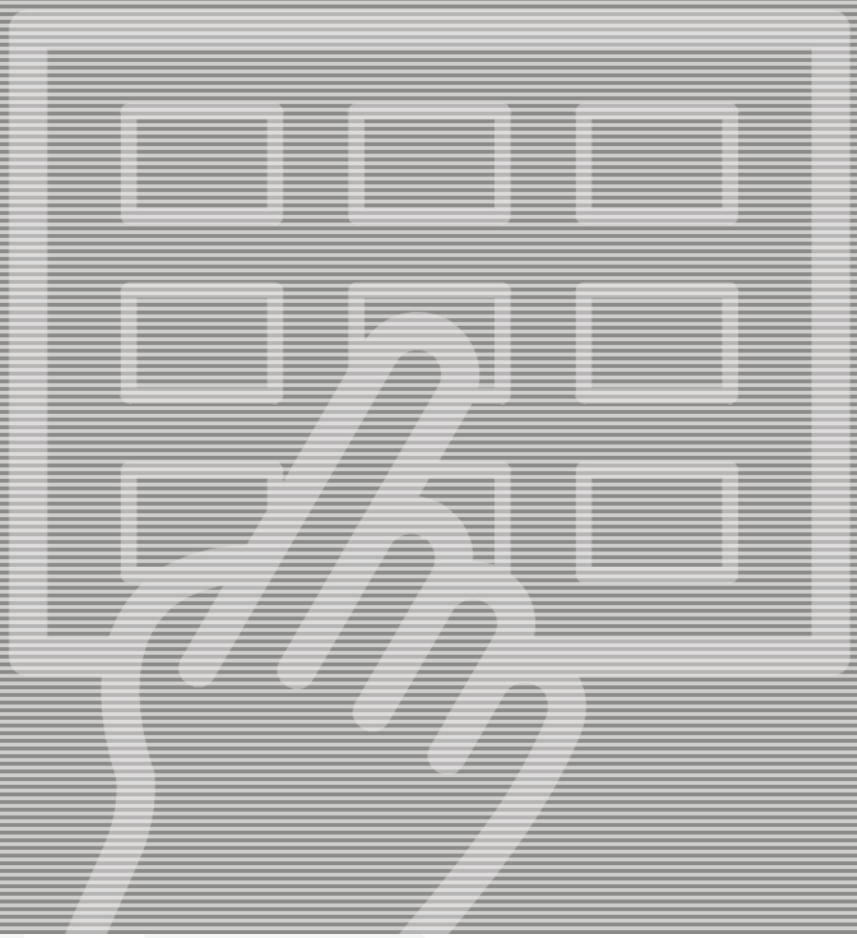

CONCEPT 205 C

GLUNZ & JENSEN
DEGRAF

User's Manual

CONCEPT 205 C

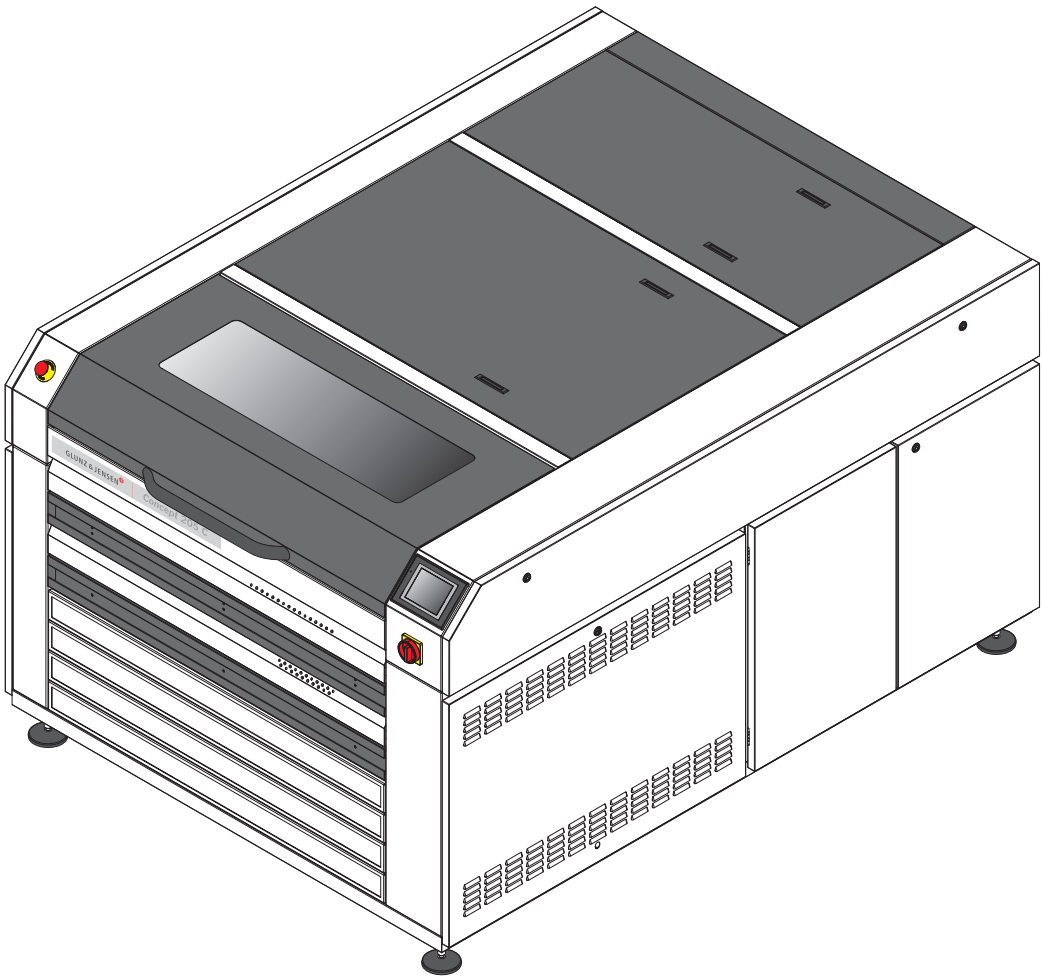

T11376

Edition AF, July 2015
This book has part No 10073808 (GB)

Always read the *Safety Instruction Manual part No 21741* before installing or operating the equipment.

This manual is published by: **Glunz & Jensen Degraf S.p.A.**
'Il Girasole' - Palazzo Donatello 8/03b
20084 Lacchiarella (MI)
Italy
Internet: www.degraf.glunz-jensen.com

Table of contents

Part 1: General information

About this manual

Intended use of this manual

This manual describes the common use procedures of the equipment. It is intended for the daily user and should be kept with the equipment for reference at all times.

Reservations

- This manual was written and illustrated using the best possible information available at the time of publication.
- Any differences between this manual and the equipment reflect improvements introduced after the publication of the manual.
- Changes, technical inaccuracies and typographic errors will be corrected in subsequent editions.
- As a part of our policy of continuous improvement, we reserve the right to alter design and specifications without further notice.

Notes, cautions, and warnings !

Throughout the manual notes, cautions, and warnings are written in bold like the example below:

Electrical installation must conform to local regulations and guidelines.

Symbol	Meaning	Explanation
	Note	The operator should observe and/or act according to the information in order to obtain the best possible function of the equipment.
	Caution	The operator must observe and/or act according to the information in order to avoid any mechanical or electrical damage to the equipment.
	Warning	The operator must observe and/or act according to the information in order to avoid any personal injury.

Unintended use of the equipment

Glunz & Jensen Degraf S.p.A. does not take any responsibility for any damage or accidents caused by unintended use of the equipment:

- It is absolutely prohibited to make any modifications, electrical nor mechanical, of the equipment. If however this prohibition is disregarded, Glunz & Jensen Degraf S.p.A.'s warranty will no longer apply.

Intended use of the equipment

- This equipment is a part of a full range dedicated for the treatment of flexographic printing plates. This range includes exposure, processor, dryer and light finisher.
- This equipment is designed to expose, process, dry and post-expose/light finish of flexographic printing plates.

Installation

- Never install the equipment in explosive environments.
- It is the responsibility of the owner and operator/s of this equipment that the installation is made in accordance with local regulations, and by engineers authorized to carry out plumbing and electrical installations.
- Installation, service and repair must be performed only by Service Technicians who are trained in servicing the equipment.
- The manufacturer cannot be held responsible for any damage caused by incorrect installation of this equipment.
- The equipment is intended for installation in a restricted access location only.

Service assistance

- If help is needed to correct any problem with the equipment, please contact your supplier.

Part 2: Daily use

General

This equipment is designed to expose, wash, clean, dry, and post-expose/light finish of flexographic printing plates.

The equipment is divided in the following sections:

- **Washout section** - designed to provide high quality and even washout of the plates as well as high performance cleaning.
- **Exposure section** - 16 lamps of 60W to ensure even exposure.
- **Dryer section** - 4 drawers, 2 heating resistors.
- **Post exposure/light finishing section** - 11 UVA lamps (60W) and 10 UVC lamps (75W).

This processor is equipped with the graphical finger touch display which ensures very easy control.

Safety warnings

To use this equipment safely, it is necessary that operators and maintenance people follow the safety instructions and safety cautions and warnings specified in the manuals.

The equipment is equipped with emergency switch which allows the operators to stop the equipment in case of emergency. This emergency switch cuts off the power supply of the entire equipment.

Make sure that the risk or the problem has been eliminated before restoring the power on the equipment.

To release the emergency switch, turn it clockwise. The equipment has to be restarted following the "Initial operation of the equipment" later in this manual.

For the safety of operators, the equipment is equipped with interlock switches for the opening of the exposure, dryer and light finisher drawers during operation and for removing of the top panels of the equipment. If any of the interlocks are not installed or closed, the equipment or a specific section of the equipment will not operate. If an interlock is activated during operation, the equipment or a specific section of the equipment stops immediately the concerned section.

For handling the plates use a safety gloves.

Initial operation of the equipment

Make sure the room temperature is between 17 and 28°C (63 and 82°F) and relative humidity on max. 80%.

Before turning the equipment on make sure that the working area around the equipment is clean and free for easy movement.

Check if there are any leaks of liquid and all the required supplies and connections (hoses, power cable, and exhausts).

Check that the emergency stop button (1) is released. If it is not, release it by turning it clockwise.

- Turn the main switch **(2)** of the equipment on.

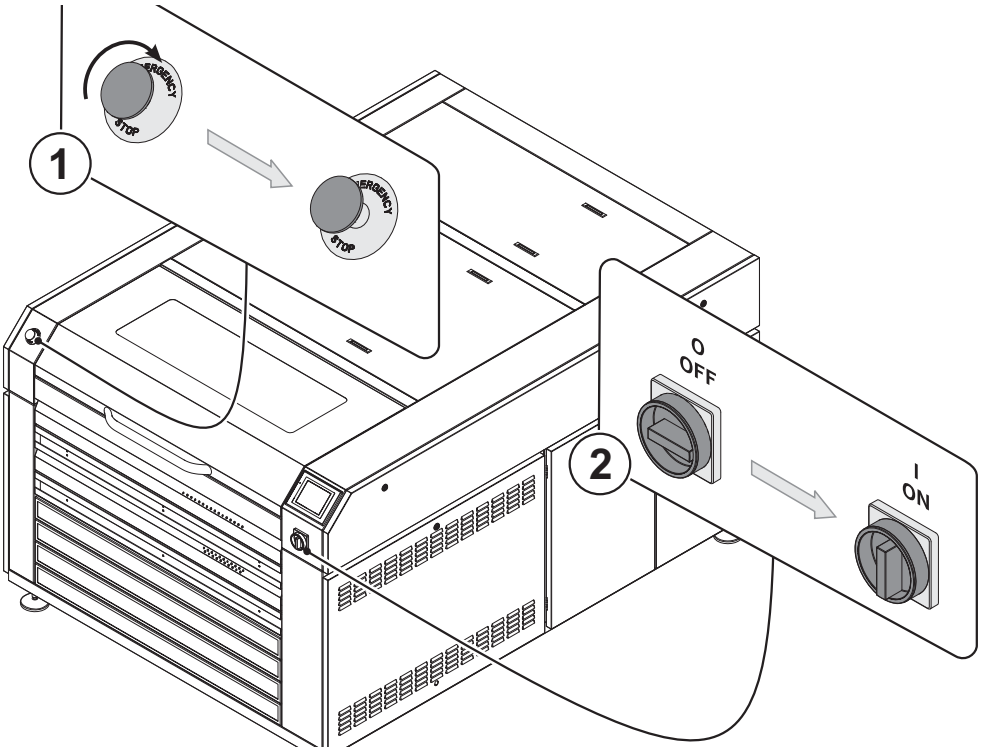

- Switch the equipment on by pressing button on the touch screen until the main screen appears.

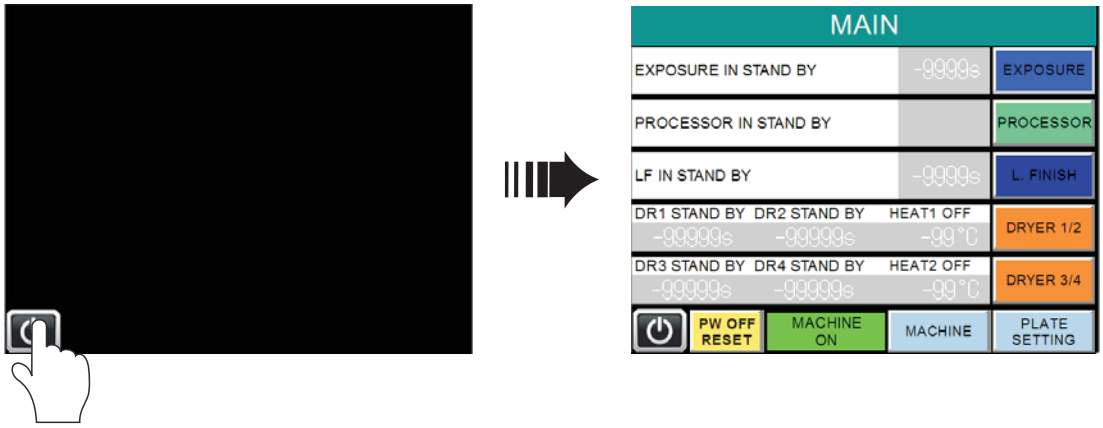

- When the emergency stop button is pressed, the following screen appears.

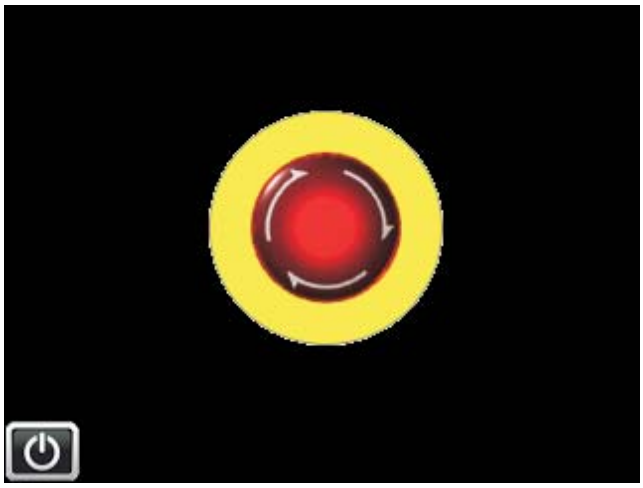

Release the emergency stop button by turning it clockwise. The equipment returns to the initial position.

Main screen description

The main screen looks like the one below.

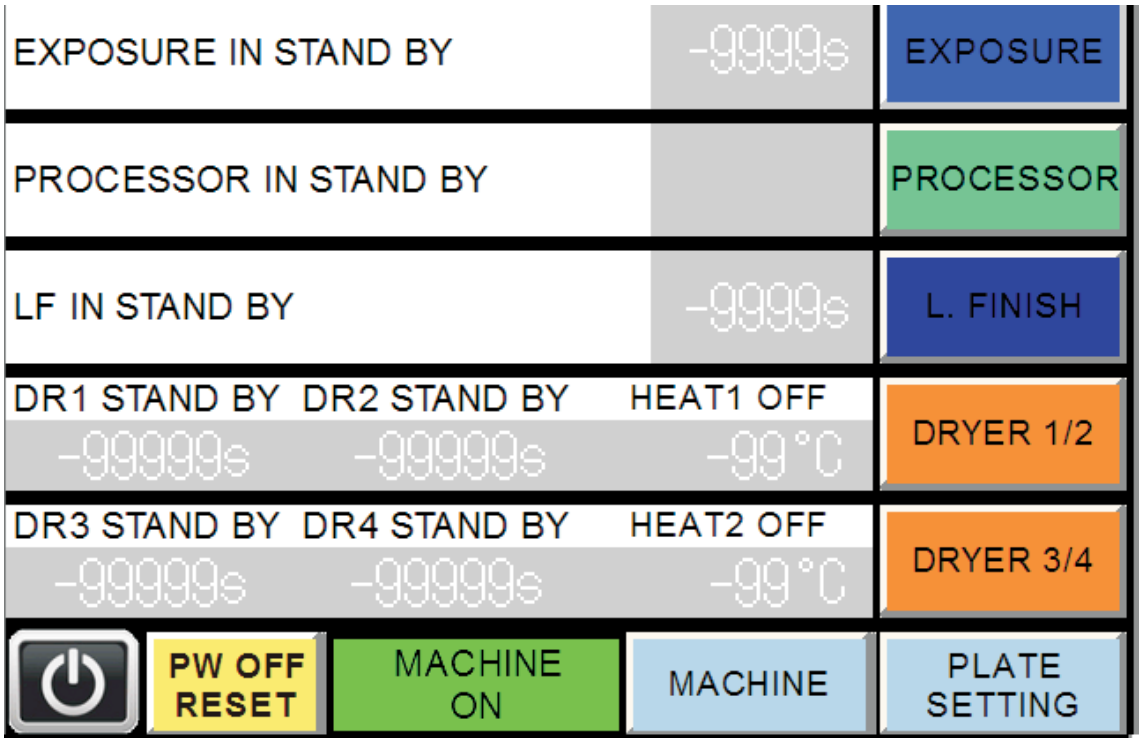

Display overview	Description
EXPOSURE	By pressing this button the exposure section screen is accessed.
PROCESSOR	By pressing this button the processor section screen is accessed.
L. FINISH	By pressing this button the light finisher section screen is accessed.
DRYER 1/2	By pressing this button the dryer section 1/2 screen is accessed.
DRYER 3/4	By pressing this button the dryer section 3/4 screen is accessed.
PLATE SETTING	Allows to set/change plate parameters.
MACHINE	Allows to switch the equipment to manual functions mode, to access hours counters, parameters setup and alarm history screens.
MACHINE ON	After pressing button, this button displays the status of request for equipment switch off. According to the status of the equipment the display shows the actual status of the power off request. If any equipment cycle is active, "POWER OFF REQ" is displayed. As soon as the equipment cycle is finished, button display switches to "POWER OFF CLEAN", and as soon the cleaning cycle is finished, button display switches to "POWER OFF TIMER". When the timer ends, the equipment power goes off.
⏻	Allows to request equipment switch off.
PW OFF RESET	This button is displayed, after pressing ⏻ button. By pressing this button it is possible to cancel the request for the equipment switch off.

Status bars of individual sections on the left side of the main screen display the actual status of the equipment sections.

	Display overview	Description
EXPOSURE SECTION	EXPOSURE IN STAND BY -9999s	Exposure section is ready to start an exposure.
	BACK EXPOSURE IN CYCLE	Back exposure cycle is ongoing.
	BACK EXPOSURE CYCLE STOP	Back exposure cycle is stopped by the operator before cycle end.
	MAIN EXPOSURE IN CYCLE	Main exposure cycle is ongoing.
	MAIN EXPOSURE CYCLE STOP	Main exposure cycle is stopped by the operator before cycle end.
	EXPO CYCLE END	Back or main exposure cycle is finished. To restart cycle it is necessary to open and close exposure drawer.
	DRAWER OPEN	Exposure drawer is opened during cycle.
	VACUUM IN CYCLE	Vacuum cycle is ongoing.
PROCESSOR SECTION	PROCESSOR IN STAND BY	Processor section is ready to start processing of plate.
	ANALYSER IN PROGRESS	After cycle start, the solvent is checked. If the set tolerance is exceeded, replace the solvent.
	CYCLE START	When solvent analysis is finished, the cycle starts.
	WASH OUT AHEAD DIRECTION STEP 1	Plate starts to move under wash out brushes in ahead direction according to the speed setting (tank solvent used).
	WASH OUT BACK DIRECTION STEP 2	Plate moves under wash out brushes in back direction according to the speed setting (tank solvent used).
	WASH OUT AHEAD DIRECTION STEP 3	Plate moves under wash out brushes in ahead direction according to the speed setting (tank solvent used).
	CLEANING BRUSH BEFORE RINSING STEP 4	When wash out cycle is finished, cleaning brush cycle starts and stops according to the time setting.
	RINSING BACK DIRECTION STEP 5	Plate starts to move under wash out brushes in back direction according to the speed setting (clean solvent valve alternates to open and close according to set value).
	RINSING AHEAD DIRECTION STEP 6	Plate moves under wash out brushes in ahead direction according to the speed set in the program (clean solvent valve alternates to open and close according to set value).
	CLEANING BRUSH BEFORE WIPING STEP 7	When rinsing cycle finished, cleaning brush cycle starts and stops according to the time setting.
	WIPING CYCLE STEP 8	Plate moves under wash out brushes in back direction according to the speed setting (no solvent and wiping brush down).

	Display overview	Description
PROCESSOR SECTION	WASHING CYCLE STEP 9	Cleaning brush cycle starts and stops according to the time setting (fresh solvent used).
	ROTATION WITHOUT SOLVENT STEP 10	Brushes rotate without solvent according to the time setting.
	CYCLE END	Processing of plate is finished. To restart cycle it is necessary to open and close entrance cover.
	ENTRANCE COVER OPEN	Entrance cover is open. If the cover is opened during cycle, the cycle stops.
	PROCESSOR CYCLE IN STOP	Processing is stopped by operator before cycle end.
LIGHT FINISHER SECTION	LF IN STAND BY -9999s	Light finisher section is ready to start a cycle.
	UVA LAMP IN CYCLE	UVA lamp cycle is ongoing.
	UVC LAMP IN CYCLE	UVC lamp cycle is ongoing.
	UVA -> UVC LAMP IN CYCLE	UVA lamp cycle followed by UVC lamp cycle is ongoing.
	UVC -> UVA LAMP IN CYCLE	UVC lamp cycle followed by UVA lamp cycle is ongoing.
	UVA LAMP CYCLE STOP	UVA lamp cycle is stopped by the operator before cycle end.
	L. FINISH CYCLE END	Light finishing cycle is finished. To restart cycle it is necessary to open and close light finisher drawer.
	DRAWER OPEN	Light finisher drawer is opened during cycle.
DRYER SECTION	DR1 STAND BY -99999s	Dryer 1 is ready to start a cycle.
	DRYER 1 STOP T°	Dryer 1 waits to start until temperature reaches setpoint.
	DRYER 1 IN CYCLE	Dryer 1 cycle is ongoing.
	DRYER 1 END	Dryer 1 cycle is finished.
	DRAWER OPEN	Dryer 1 drawer is open. If dryer/heater in cycle, then stops.
	HEAT1 OFF -99°C	Heater 1 is not activated.
	HEATER 1 IN PROG	Heater 1 is activated and warming up to reach setpoint.
	HEATER 1 T°OK	Dryer 1 temperature is reached
	dryer 2, 3 and 4 status bars display the same kind of information as dryer 1 status bar heater 2 status bar displays the same kind of information as heater 1 status bar	

Exposure section

By pressing EXPOSURE button following exposure section screen is accessed.

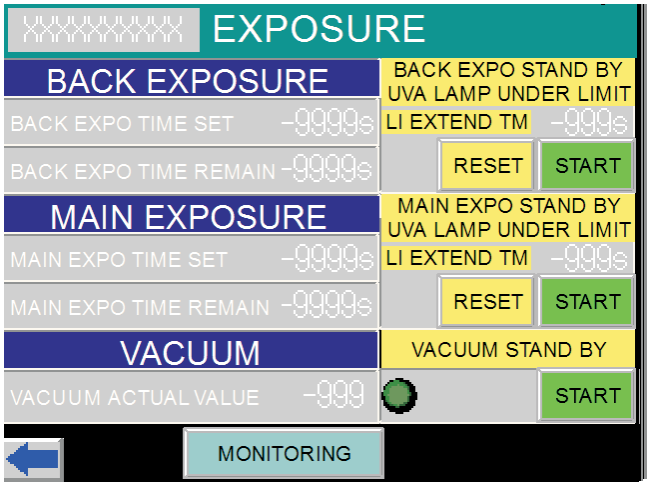

By pressing button is accessed plate list where it is possible to select required plate stored in the memory.

It is possible to select program only if all cycles are off or finished.

Status bars on the left side of the screen inform about the time set for the cycle as well as remaining time of the cycle for back and main exposure and actual value of vacuum cycle.

On the right side of the screen it is possible to start, stop or reset cycle.

After cycle start the START button changes to STOP. To stop the cycle press it. After pressing it button changes back to START and yellow RESET button appears. Now it is possible to reset or restart cycle by pressing on corresponding button.

To turn back to main screen press .

By pressing MONITORING button following screen is displayed.

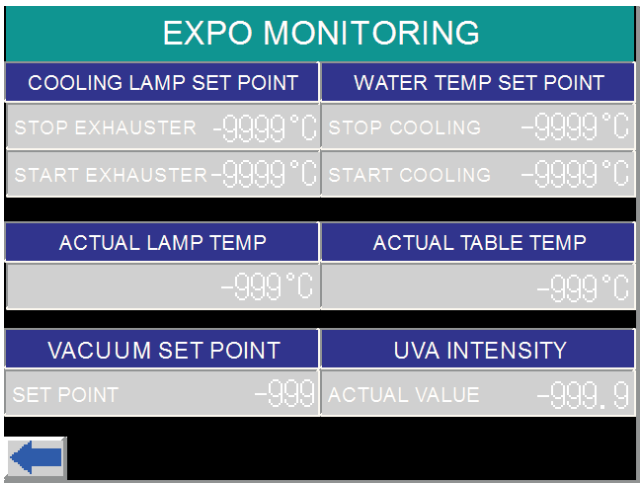

Here is displayed start and stop temperature set for cooling lamp and table as well as their actual temperatures. As well here is displayed start and stop temperature set for exposure exhauster, vacuum setpoint and actual value of UVA intensity. To turn back to exposure section screen press .

Processor section

By pressing PROCESSOR button following processor section screen appears.

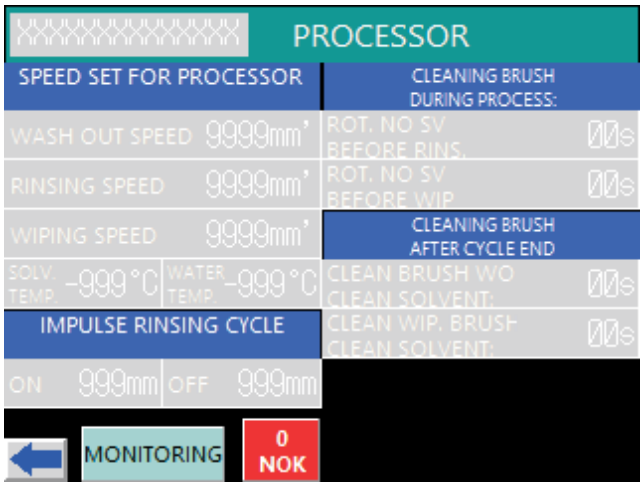

Keep 0 NOK button pressed until message "PLEASE WAIT" appears.

Wait untill "zero axis" is executed. Then the following screen appears automatically.

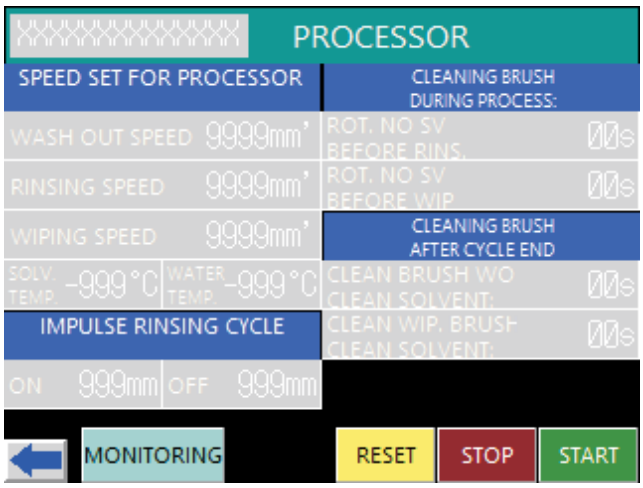

By pressing button is accessed plate list where it is possible to select required plate stored in the memory.

It is possible to select program only if all cycles are off or finished.

Status bars of the screen inform about various parameters set for all processing cycles.

As well it is possible to start, stop or reset cycle.

To start cycle press the START button and red STOP button appears. To stop the cycle press it, and afterwards yellow RESET button appears. Now it is possible to reset or restart cycle by pressing on corresponding button.

To turn back to main screen press .

By pressing MONITORING button following screen is displayed.

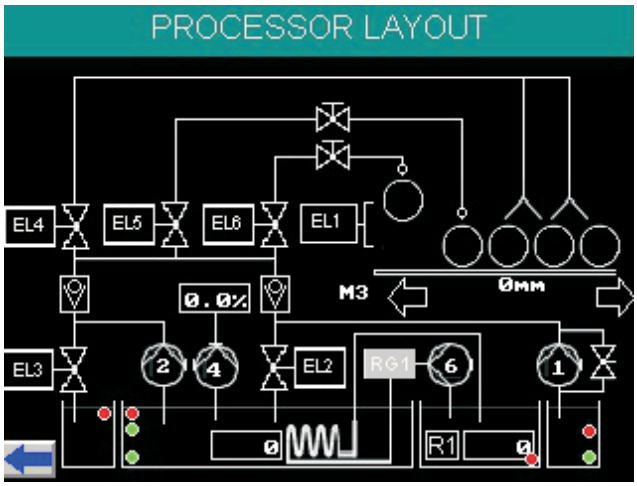

From this screen it is possible to see the status of various pumps, valves, etc.

To turn back to processor section screen press .

Light finisher section

By pressing L FINISH button following light finisher screen is displayed.

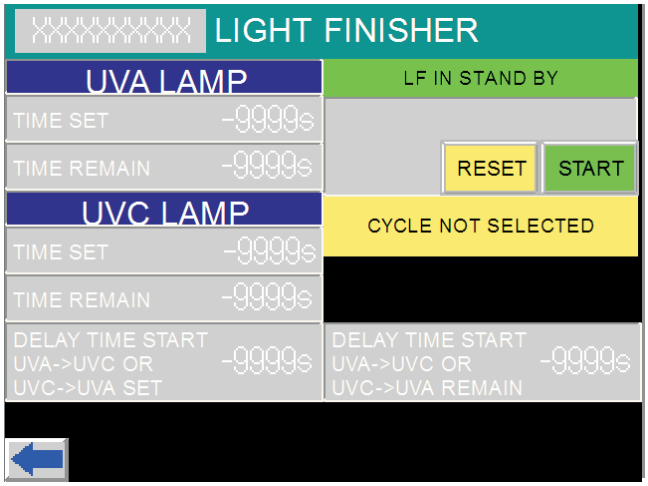

By pressing button is accessed plate list where it is possible to select required plate stored in the memory.

It is possible to select program only if all cycles are off or finished.

Status bars of the screen inform about the time setting and remaining time of the UVA cycle, UVC cycle and combined sequence delay.

On the right side of the screen it is possible to start, stop or reset cycle.

After cycle start the START button changes to STOP. To stop the cycle press it. After pressing it button changes back to START and yellow RESET button appears. Now it is possible to reset or restart cycle by pressing on corresponding button.

To turn back to main screen press .

Dryer section

By pressing DRYER 1/2 button following dryer screen is displayed.

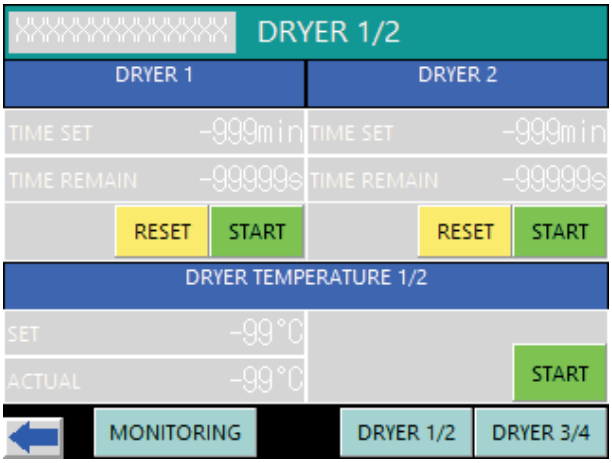

By pressing button is accessed plate list where it is possible to select required plate stored in the memory.

It is possible to select program only if all cycles are off or finished.

Status bars of the screen inform about the time setting and remaining time of drying cycle in dryer 1 and 2 as well about the set and actual temperature in dryer 1 and 2.

After cycle start the START button changes to STOP. To stop the cycle press it. After pressing it button changes back to START and yellow RESET button appears. Now it is possible to reset or restart cycle by pressing on corresponding button.

To turn back to main screen press .

By pressing MONITORING button following screen is displayed.

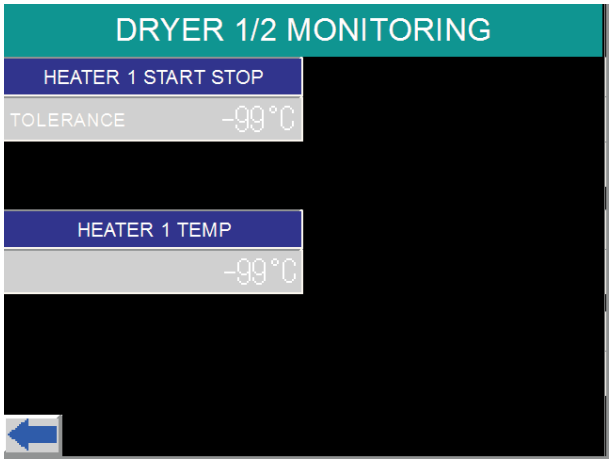

Here is displayed the tolerance for start and stop temperature set for heater 1 as well as its actual temperature. To turn back to dryer section screen press .

The same kind of information is available for dryer 3/4 section. Press button DRYER 1/2 or DRYER 3/4 to switch between dryer sections.

Alarms

The accoustic signal occurs for 5 seconds when any automatic cycle is finished.

When an alarm occurs, the ⚠ sign is displayed in the right top part of the main screen and on the right side of the corresponding section status bar or in the corresponding section screen.

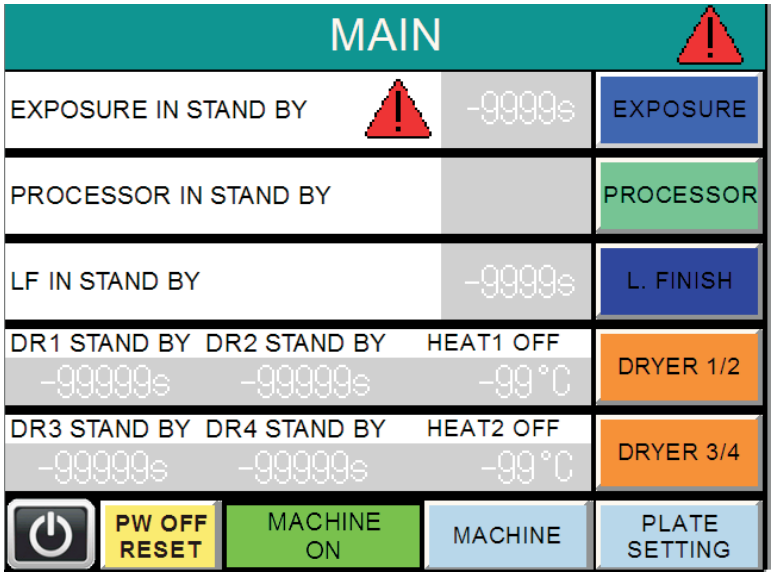

The alarm indicates that the equipment is not in the condition to work in normal and safe way. This prevents the use of the section affected by the alarm. When an alarm is on, the acoustic signal is on too. Press on the alarm sign to display which alarm is activated.
To turn back to main screen press ⬅.

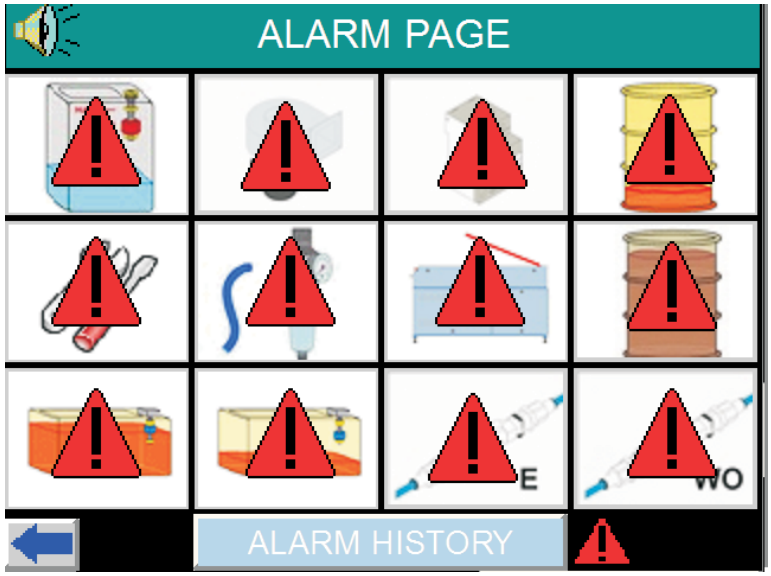

Symbol	Description
	Water level is too low.
	Exposure exhaust blower not working.
	Error on the electronics.
	External fresh solvent tank is empty.
	At least one of the hours counters alarm is activated. Pressing this symbol while its alarm is active displays the hours counters screen. **It is not possible to reset the counters. For this function password is required.**
	Compressed air pressure is too low.
	One of top covers is open.
	External used solvent tank is full.
	Solvent level of internal solvent tank is too high.
	Solvent level of internal solvent tank is too low.
	No water circulation in exposure section.
	No water circulation in washout section.

To go to alarm history screen press ALARM HISTORY. Following screen is then displayed.

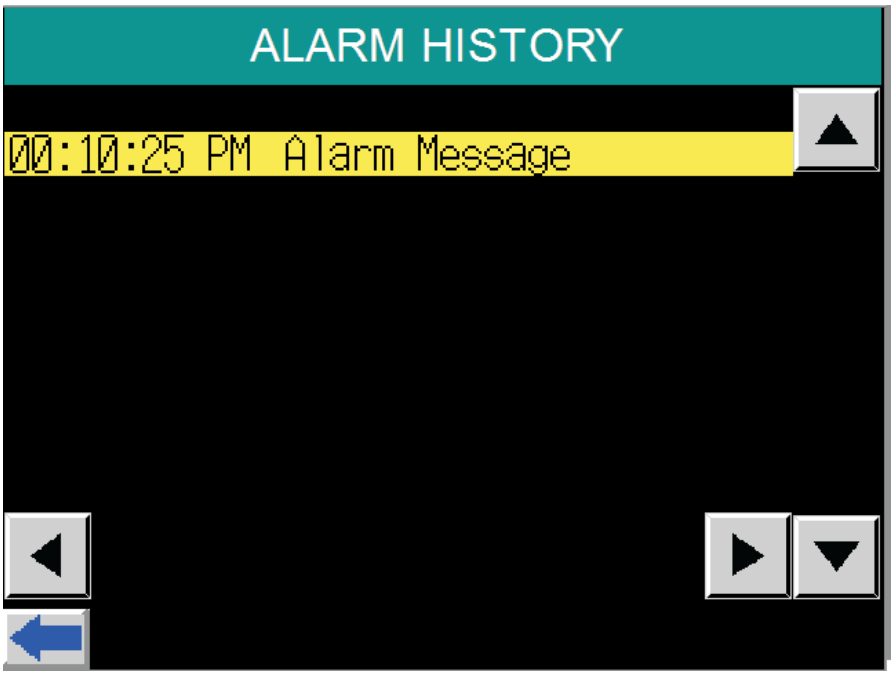

It is possible to see the time of alarm occurance and its description as well as to scroll up and down the list and to the left and right to see whole alarm description.

According to the alarm number it is possible to identify the alarm. Please see the table on the next pages.

To turn back to alarm screen press .

It is possible to access alarm history from main screen too by pressing MACHINE button and afterwards ALARM HISTORY button.

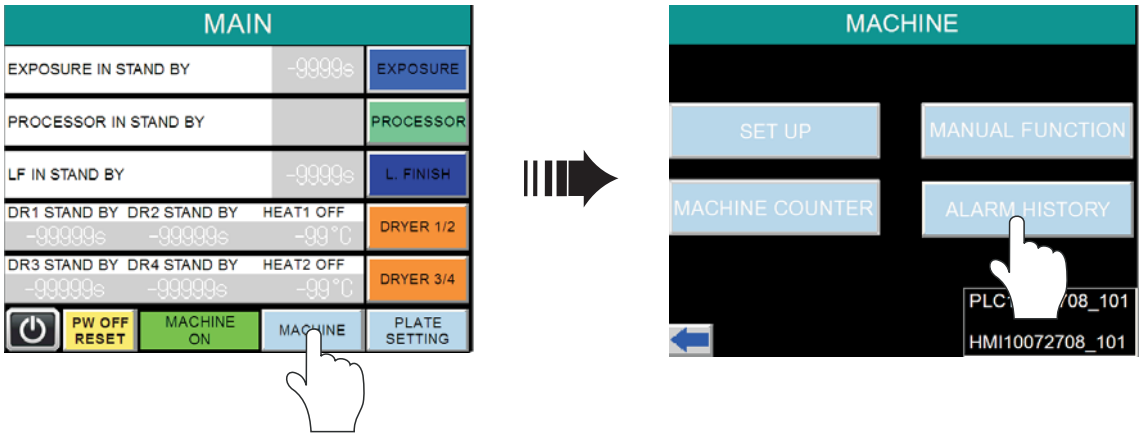

List of alarms

For solving some alarms it is required to contact service technician. Do not take any action which is not described in this manual.

Alarm	Message	Result	Cause/remedy
ALM01	Solvent overheating	Processor cycle start inhibited	Safety solvent maximum temperature reached (45°C), heating cycle stops until solvent temperature reaches 42 C°.
ALM02	Flowmeter water table not ok	Exposure cycle start inhibited	If KP5 ON and S10 OFF after 1.5 sec KP5 turns OFF and ALM02 appear. With pump KP5 (water cooler exposure table) ON, flowmeter sensor S10 (input 4.2) must be ON.
ALM03	Flowmeter water solvent not ok	Processor cycle start inhibited	If KP6 ON and S11 OFF after 1.5 sec KP6 turns OFF and ALM03 appear. With pump KP6 (water cooler exposure table) ON, flowmeter sensor S11 (input 4.3) must be ON.
ALM04	Water cooling solvent pump not ok	Processor cycle start inhibited	Thermal relay QP6 (input 3.10) turns OFF. Check for possible cause.
ALM05	Vacuum pump not ok	Exposure cycle start inhibited	Thermal relay QP3 (input 3.07) turns OFF. Check for possible cause.
ALM06	Dryer motor exhauster not ok	Dryer cycle start inhibited	Thermal relay QV4 (input 4.00) turns OFF. Check for possible cause.
ALM07	Drye motor blower not ok	Dryer cycle start inhibited	Thermal relay QV5 (input 4.01) turns OFF. Check for possible cause.
ALM08	LF exhauster motor not ok	Signalization	Thermal relay QV3 (input 3.15) turns OFF. Check for possible cause.
ALM09	Fresh solvent pump not ok	Processor cycle start inhibited	Thermal relay QP1 (input 3.05) turns OFF. Check for possible cause.
ALM10	Washout pump not ok	Processor cycle start inhibited	Thermal relay QP2 (input 3.06) turns OFF. Check for possible cause.
ALM11	Analyser pump not ok	Processor cycle start inhibited	Thermal relay QP4 (input 3.08) turns OFF. Check for possible cause.
ALM12	Cooling expo pump not ok	Exposure cycle start inhibited	Thermal relay QP5 (input 3.09) turns OFF. Check for possible cause.
ALM13	Motor brush not ok	Processor cycle start inhibited	Thermal relay QM2 (input 3.11) turns OFF. Check for possible cause.
ALM14	Motor brush oscillation not ok	Processor cycle start inhibited	Thermal relay QM3 (input 3.12) turns OFF. Check for possible cause.
ALM15	Exhauster processor not ok	Processor cycle start inhibited	Thermal relay QV1 (input 3.13) turns OFF. Check for possible cause.
ALM16	Water level cooling solvent low	Processor cycle start inhibited	Fill up water solvent tank. With water solvent tank full input KL1 (2.00) must be ON.

Alarm	Message	Result	Cause/remedy
ALM17	Dirty solvent tank full	Processor cycle start inhibited	Used solvent tank full. With used solvent tank empty input IL5 (2.06) must be ON.
ALM18	Water level cooling table low	Exposure cycle start inhibited	Fill up water table tank. With water table tank full input IL6 (2.07) must be ON.
ALM19	Washout tank overlevel	Processor cycle start inhibited	Washout tank reached maximum level. With washout tank under the maximum level input IL3 (2.03) must be ON.
ALM20	Air pressure mixing	Processor cycle start inhibited	Check air pressure. With air pressure ok input APS (2.08) must be ON.
ALM21	Heater solvent counter reached	Processor cycle start inhibited	Hours/cycles counter setpoint reached. Enter hours/cycles counter page and reset the corresponding counter.
ALM22	Heater dryer 1-2 counter reached	Signalization	Hours/cycles counter setpoint reached. Enter hours/cycles counter page and reset the corresponding counter.
ALM23	Heater dryer 3-4 counter reached	Signalization	Hours/cycles counter setpoint reached. Enter hours/cycles counter page and reset the corresponding counter.
ALM24	UP down wip brush counter reached	Signalization	Hours/cycles counter setpoint reached. Enter hours/cycles counter page and reset the corresponding counter.
ALM25	EL2 solvent valve counter reached	Signalization	Hours/cycles counter setpoint reached. Enter hours/cycles counter page and reset the corresponding counter.
ALM26	EL3 solvent valve counter reached	Signalization	Hours/cycles counter setpoint reached. Enter hours/cycles counter page and reset the corresponding counter.
ALM27	EL4 solvent valve counter reached	Signalization	Hours/cycles counter setpoint reached. Enter hours/cycles counter page and reset the corresponding counter.
ALM28	EL5 solvent valve counter reached	Signalization	Hours/cycles counter setpoint reached. Enter hours/cycles counter page and reset the corresponding counter.
ALM29	EL6 solvent valve counter reached	Signalization	Hours/cycles counter setpoint reached. Enter hours/cycles counter page and reset the corresponding counter.
ALM30	KM2 wo brush command counter reached	Signalization	Hours/cycles counter setpoint reached. Enter hours/cycles counter page and reset the corresponding counter.
ALM31	KM3 wo brush command counter reached	Signalization	Hours/cycles counter setpoint reached. Enter hours/cycles counter page and reset the corresponding counter.

Alarm	Message	Result	Cause/remedy
ALM32	KP1 wo brush command counter reached	Signalization	Hours/cycles counter setpoint reached. Enter hours/cycles counter page and reset the corresponding counter.
ALM33	Cover processor open	Signalization	With cover processor closed input KA3 (2.11) must be OFF.
ALM34	Dryer air pressure not ok	Signalization	Check input PSW2 (2.13). It must be ON.
ALM35	Not in use		
ALM36	KP2 valve counter reached	Signalization	Hours/cycles counter setpoint reached. Enter hours/cycles counter page and reset the corresponding counter.
ALM37	KP3 valve counter reached	Signalization	Hours/cycles counter setpoint reached. Enter hours/cycles counter page and reset the corresponding counter.
ALM38	KP4 valve counter reached	Signalization	Hours/cycles counter setpoint reached. Enter hours/cycles counter page and reset the corresponding counter.
ALM39	KP6 valve counter reached	Signalization	Hours/cycles counter setpoint reached. Enter hours/cycles counter page and reset the corresponding counter.
ALM40	KP5 valve counter reached	Signalization	Hours/cycles counter setpoint reached. Enter hours/cycles counter page and reset the corresponding counter.
ALM41	KRG1 valve counter reached	Signalization	Hours/cycles counter setpoint reached. Enter hours/cycles counter page and reset the corresponding counter.
ALM42	KRG2 valve counter reached	Signalization	Hours/cycles counter setpoint reached. Enter hours/cycles counter page and reset the corresponding counter.
ALM43	KV2 valve counter reached	Signalization	Hours/cycles counter setpoint reached. Enter hours/cycles counter page and reset the corresponding counter.
ALM44	KV3 valve counter reached	Signalization	Hours/cycles counter setpoint reached. Enter hours/cycles counter page and reset the corresponding counter.
ALM45	KVD valve counter reached	Signalization	Hours/cycles counter setpoint reached. Enter hours/cycles counter page and reset the corresponding counter.
ALM46	KEXP valve counter reached	Signalization	Hours/cycles counter setpoint reached. Enter hours/cycles counter page and reset the corresponding counter.
ALM47	KLFA valve counter reached	Signalization	Hours/cycles counter setpoint reached. Enter hours/cycles counter page and reset the corresponding counter.

Alarm	Message	Result	Cause/remedy
ALM48	KLFC valve counter reached	Signalization	Hours/cycles counter setpoint reached. Enter hours/cycles counter page and reset the corresponding counter.
ALM49	Cover door open during cycle	Signalization	Close cover door to restart cycle.
ALM50	Servo in alarm emergency stop request	Processor cycle start inhibited	Servo motor goes in alarm. Press emergency button then wait until the message on the screen "SERVO ALARM RESET IN PROGRESS" disappears.
ALM51	Fresh solvent empty	Processor cycle start inhibited	Minimum level reached. With fresh solvent tank full input L4_1(2.04) must be OFF.
ALM52	Expo exhauster motor not ok	Exposure cycle start inhibited	Thermal relay QV2 (input 3.14) turns OFF. Check for possible cause.
ALM53	Minimum level washout tank	Processor cycle start inhibited	With washout tank not under the minimum level input L2_1 (2.01) must be OFF.
ALM54	Not in use		
ALM55	L integrator calibration not ok	Processor cycle start inhibited	With light integrator function ON it is not possible to run MAIN or BACK expopsure cycle without CALIBRATION DONE. Go to LIGHT INTEGRATOR and perform AUTOLEARN CYCLE.
ALM56	Water cooling solvent sensor not ok	Processor cycle start, cooling and solvent heating inhibited	Analog input C1 does not work correctly, check electrical wire connection or replace the sensor.
ALM57	Solvent temp. sensor not ok	Processor cycle start and heating solvent inhibited	Analog input C2 does not work correctly, check electrical wire connection or replace the sensor.
ALM58	Exposure lamp sensor not ok	Processor cycle start inhibited	Analog input C3 does not work correctly, check electrical wire connection or replace the sensor.
ALM59	Exposure table sensor not ok	Cooling group of exposure table inhibited	Analog input C4 does not work correctly, check electrical wire connection or replace the sensor.
ALM60	Dryer 1-2 sensor not ok	Heater dryer 1-2 inhibited	Analog input C5 does not work correctly, check electrical wire connection or replace the sensor.
ALM61	Dryer 3-4 sensor not ok	Heater dryer 3-4 inhibited	Analog input C6 does not work correctly, check electrical wire connection or replace the sensor.
ALM62	Fresh solvent minimum level		Minimum level reached. With fresh solvent tank full imput L4_2(2.05) must be ON.

Plate settings

It is possible to store 24 plates with their process parameters.

Press PLATE SETTING button from the main screen to access the exposure plate parameters screen. In the bottom it is possible to go to plate parameters for processing, drying and light finishing of the plate by pressing the corresponding button.

Exposure parameters

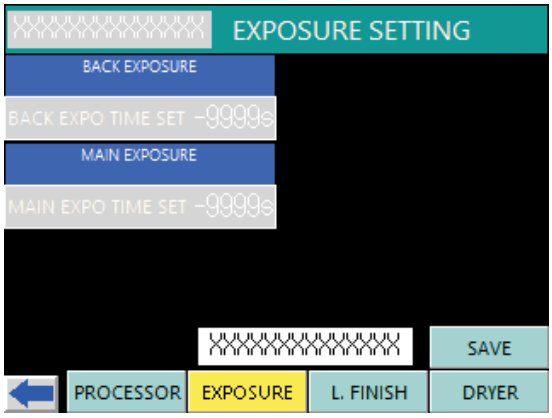

Light finisher parameters

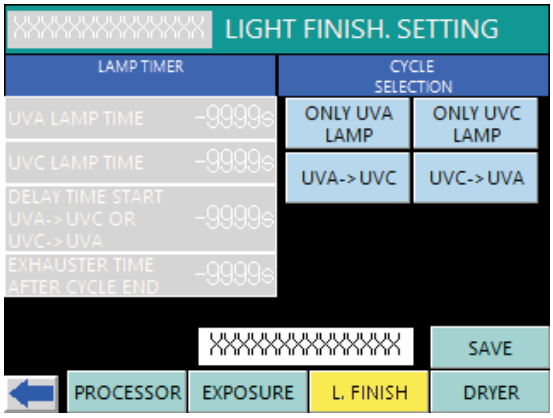

Dryer parameters

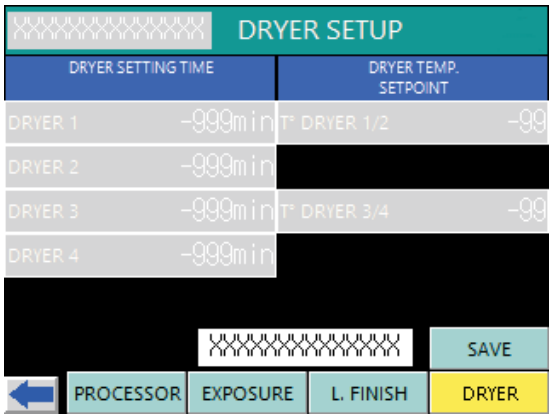

Processor parameters

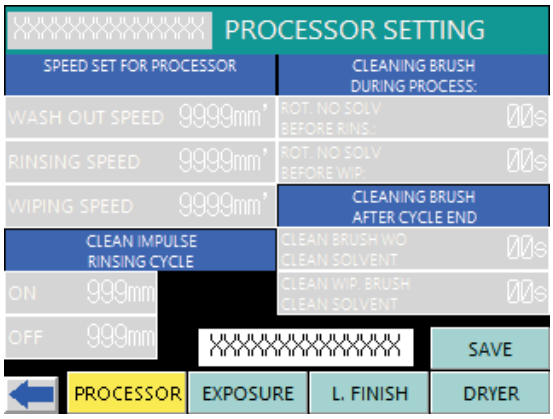

By pressing button (in the left top corner) is accessed plate list where it is possible to select required plate stored in the memory.

On each screen it is possible to modify the name of the plate as well as the dedicated parameters. When done press SAVE to store modified parameters/name.

When the correct plate is displayed, press required button to change the plate name or one of the parameters to change it. An alphanumeric keyboard for the plate name or numeric keyboard for other parameters is then displayed.

Alphanumeric keyboard

Numeric keyboard

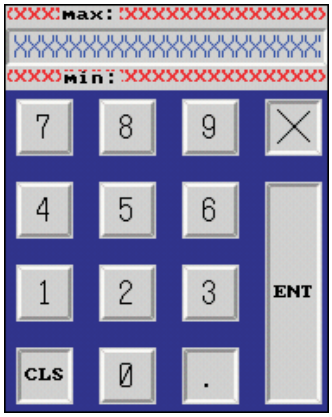

In all cases, after typing in a new value, always confirm the input by pressing "ENT" button. Not doing this may result in corrupted values memorisation.

The name plate from the same channel is common for all sections. Modifying the plate name from one channel in one section will modify the plate name in other section.

Plate selection

- From the main screen enter the section which requested to process. Press to choose required plate. When done, press START to start to operate the concerned section.

Part 3: Making plates

Starting an exposure cycle

For handling the plates use a safety gloves.

- Pull out the exposure drawer and put the plate on the cooled table to make the back or main exposure.
- Enter the exposure section from the main screen. Select the required plate type from the plate list.
- Make sure the back and main exposure parameters are correct.

Successful back exposure requires the UVA lamps are at peak output in the beginning of the back exposure cycle. This requires a pre-heat step prior to doing the back exposure of the plate. This is secured by running a short main exposure cycle with no plate on the table. Run a 5 minute main exposure cycle, allowing the lamps to reach the operating temperature, at which time the fans activate. The main exposure can be cancelled once the lamps are fully pre-heated.

- When running back exposure cycle, vacuum cycle is not in use.
- When running main exposure cycle on conventional plate, put the vacuum foil on top of the plate and film (not required for back exposure or for digital plates).
- Start the vacuum by pressing START button from vacuum section of exposure section screen. When exposure finished, stop vacuum by pressing STOP.
- Close the exposure drawer.
- To start an exposure, press START button of back or main exposure section.

Starting a washout cycle

For handling the plates use a safety gloves.

- Open the entrance cover and fix the plate on the transport table.

Make sure the sticky sheet is dry enough to secure proper fixing of the plate.

- Enter the processor section from the main screen. Select the required plate type from the plate list.
- Make sure the processing parameters are correct.
- Close the entrance cover.
- To start cycle, press START button of the processor section screen.

Be aware that after pressing START button, the solvent analyzer performs the check of solvent contamination for approx. 15 seconds. If needed, pumps perform refresh of solvent according to setup, otherwise process starts immediately.

It is recommended to secure that the sticky sheet is dry enough after each processed plate. It secures proper fixation of the plate.

In case the sticky sheet is not fully covered with the plate(s) to process, the area which is not covered by plate(s) should be covered with e.g. a piece of flexo plate to prevent long contact between the sticky sheet and the solvent. This helps to prolong lifetime of the sticky sheet significantly.

Starting a dryer cycle

For handling the plates use a safety gloves.

- Pull out the dryer drawer and put the plate in.
- Enter the dryer section from the main screen. Select the required plate type from the plate list.
- Make sure the drying parameters are correct.
- Close the dryer drawer.
- To start cycle, press START button of the corresponding dryer section.

Starting a light finisher cycle

For handling the plates use a safety gloves.

- Pull out the light finisher drawer and put the plate in.
- Enter the light finisher section from the main screen. Select the required plate type from the plate list.
- Make sure the light finishing parameters are correct.
- Close the light finisher drawer.
- To start cycle, press START button of the corresponding light finishing (UVA cycle, UVC cycle or combined sequence) section.

Specific cycle

The equipment offers the possibility to have an automatic sequence of light finishing.

If this function has been enabled (refer to "Equipment setup" in the equipment's Service Manual) the cycle proceeds as followed:

- if UVA --> UVC is selected, then UVA cycle is followed by UVC cycle after a preset delay,
- if UVC --> UVA is selected, then UVC cycle is followed by UVA cycle after a preset delay.

Part 4: Maintenance

General

Maintenance activities are listed in the Maintenance Chart delivered with the equipment.

Filling up the cooler tank

This operation has to be carried out with the equipment switched off.

- Unlock the side panel by using triangle shaped key and remove it.
- Remove the cover of the cooler tank.

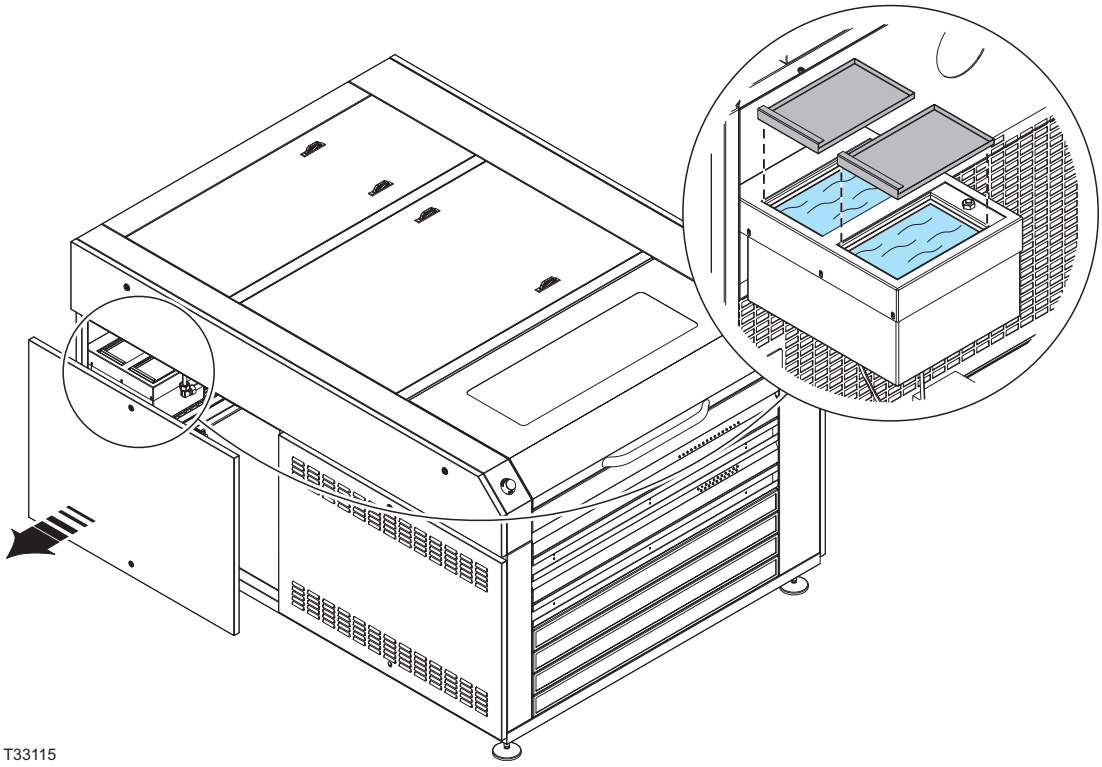

- Prepare necessary amount of a solution based on 70% of demineralized/distilled water, 30% of ethylene glycol and a few drops of algaecide (antifoam action).
- Fill the tank to the maximum.

Cleaning the equipment and compressed air line check

- Clean the equipment covers from dust and dirt by using a clean damp cloth.

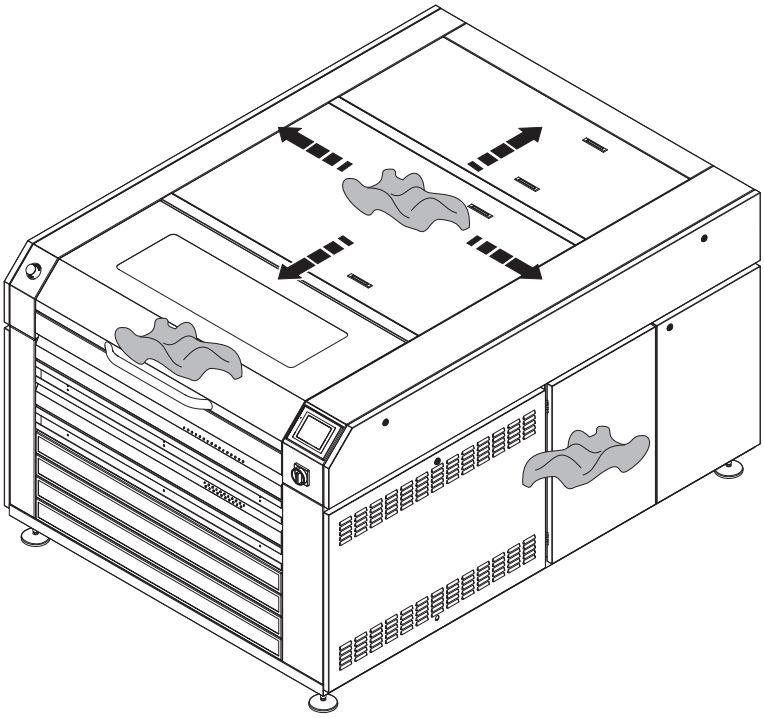

T33116

- Check the compressed air lines and its supply pressure (6 - 10 bar).

Main exposure lamps UV output measurement

- Pull out the exposure drawer and place the sensor of a Kühnast meter on top of the exposure table.
- Close the exposure drawer.
- Run an exposure cycle. Make sure that the temperature of lamps is at least 38°C.
- Repeat the UV output measurement at another eight points of the exposure table by using a Kühnast meter. Record the data in a UVA spreadsheet with average output, and % maximum variation.
- When finished and replacement of lamps is not needed, pull out the exposure drawer, remove the sensor and close the exposure drawer again.

UV lamps replacement

General

- The tube is fragile, take a great care while unpacking, moving and installing the tube.
- Only clean tubes ensure uniform light emission. Before installation, ensure the tubes are clean.
- Perspiration and sebaceous oil from the skin form white smudges which become etched on the quartz surface of the tube, when the tube reaches its normal operating temperature. The etched areas of the tubes inhibit the transmission of the desired UV energy.

Make sure the equipment is turned off and disconnected from the electricity supply, the mains supply is locked off using a padlock or similar, and then a check made to ensure that the equipment will not run.

Do not handle the tubes with bare hands. Wear cut resistant gloves.

Always use safety glasses when handling lamps.

Fluorescent tubes contain small amounts of mercury. Used lamps should be disposed according to local laws and regulation.

UV-C light radiation is dangerous for human skin and particularly the eyes. Even a short exposure time may cause burnings in the lower skin layers and damages the eyes retina. Due to the *safety* systems installed, it should never be required to check the UV-C tubes by view the UV-C light directly when operating, maintaining or servicing the equipment. However, in case of need it is mandatory to wear a welding helmet with at least shade 6, safety clothes and gloves.

The UVA exposure tubes have a built-in reflector which is applied in a semi-circle over the entire length of the tube. The reflector is recognizable by the white no transparent colouring of the glass in the tube. The reflector is designed to direct the light. When installing ensures that the reflection side is correctly located (non transparent section should be directed toward the plate.

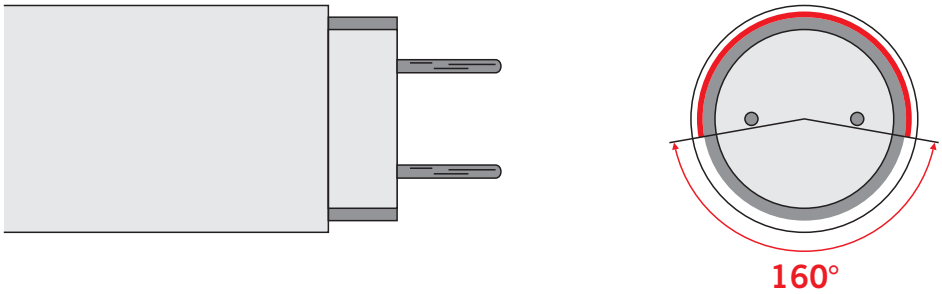

When installing new lamps a "burning" of the lamps is recommended to get correct performance and to stabilize them. Run the lamps prior to use the equipment (see the Service Manual).

Exposure lamps replacement

Make sure the equipment is turned off and the main switch is locked in "OFF" position.

- Pull out the exposure drawer on the maximum **(a)**.
- Remove the right bottom side panel closest to the front **(b)**.
- Remove locking screw securing the lamps holder drawer **(c)** and pull out the drawer. Use the exposure drawer as a support **(d)** according to the picture.

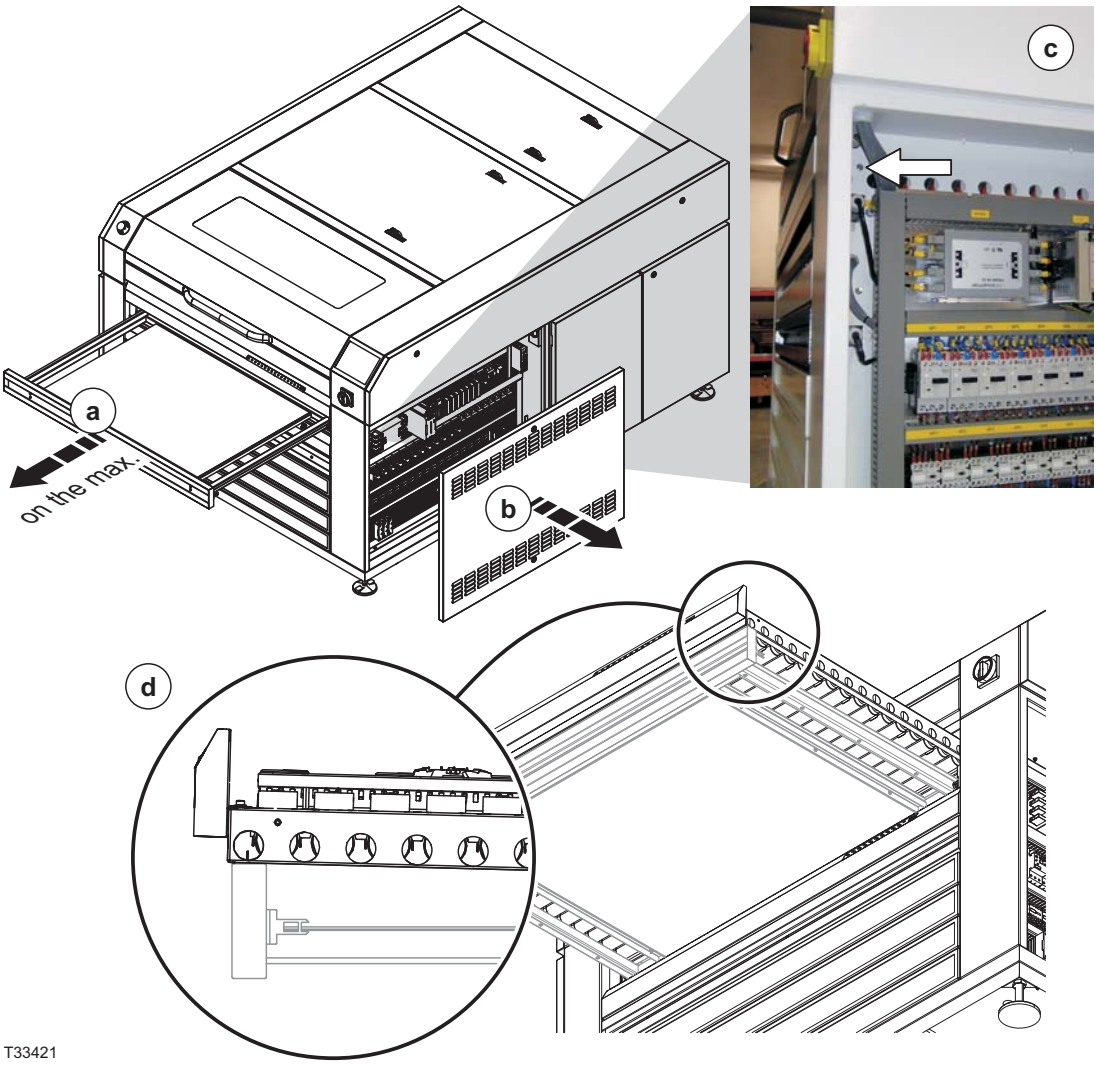

- Remove the lamps by turning them 90°.
- Make sure that the socket position is correct on both sides for inserting the UV lamp. To adjust the socket correctly it is recommended to use a flat screwdriver **(2)**.
- Insert the new lamp in the socket on both sides and lock it by turning 90° **(4)**. Note the little mark on the UV lamp ring which must be in line with the socket opening when the lamp is installed correctly **(5)**. Make sure that the lamps are installed in alternate left/right position to ensure proper light distribution **(6)**.

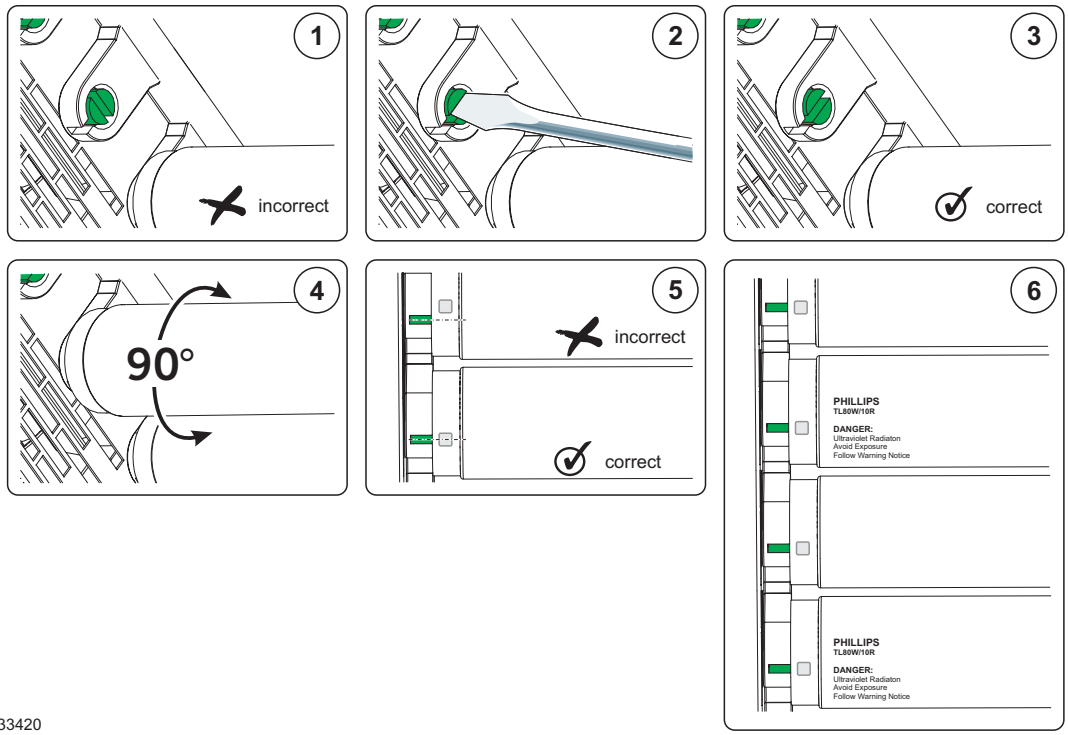

T33420

- Push the lamps holder drawer in.
- Secure the lamps holder drawer with the locking screw.
- Close the exposure drawer.
- Unlock the main switch and turn the equipment on. Burn the lamps and carry out the light integrator calibration (see the Service Manual).

Recalibrating light integrator after changing the lamps may result in changing the plate exposure times.

The UVA fluorescent lamps contain mercury. Dispose them according to local, state or federal laws.

Light finisher lamps replacement

Make sure the equipment is turned off and the main switch is locked in "OFF" position.

- Pull out the light finisher drawer on the maximum **(a)**.
- Remove the right bottom side panel closest to the front **(b)**.
- Remove locking screw securing the lamps holder drawer **(c)** and pull out the drawer. Use the light finisher drawer as a support **(d)** according to the picture.

Always put the lamps holder drawer on the support between two thicker lamps!

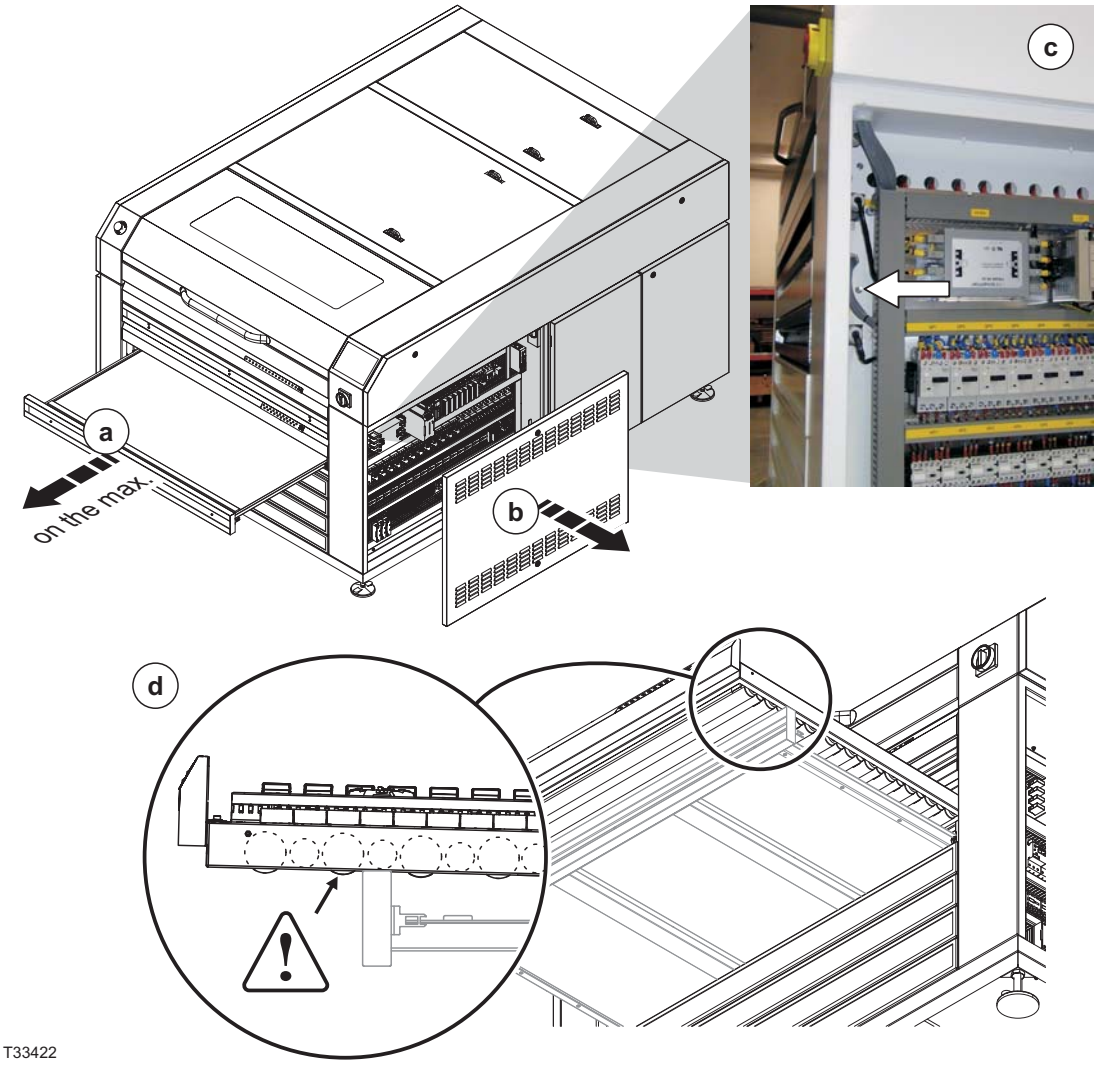

- Remove the lamps by turning them 90°.
- Make sure that the socket position is correct on both sides for inserting the UV lamp. To adjust the socket correctly it is recommended to use a flat screwdriver **(2)**.
- Insert the new lamp in the socket on both sides and lock it by turning 90° **(4)**. Note the little mark on the UV lamp ring which must be in line with the socket opening when the lamp is installed correctly **(5)**. Make sure that the lamps are installed in alternate left/right position to ensure proper light distribution **(6)**.

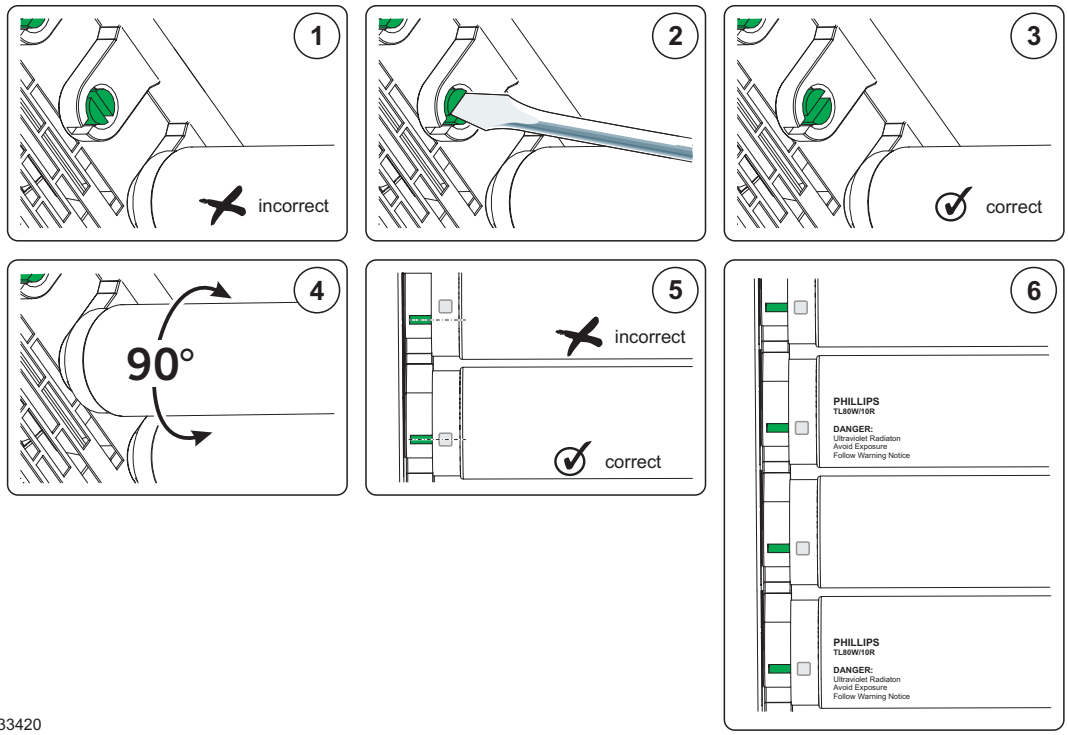

T33420

- Push the lamps holder drawer in.
- Secure the lamps holder drawer with the locking screw.
- Close the light finisher drawer.
- Unlock the main switch and turn the equipment on. Burn the lamps.

The UVA and UVC fluorescent lamps contain mercury. Dispose them according to local, state or federal laws.